

https://dspace.org/

Dislocations in a simple cubic lattice

Nabarro, F.R.N.

1947
Physical Society
http://hdl.handle.net/10539/1145
Proceedings of the Physical Society, Vol. LIX, 1947, p. 256-272

Downloaded from a DSpace repository. https://dspace.org/

F. R. N. 6

REPRINTED FROM THE
PROCEEDINGS OF THE PHYSICAL SOCIETY, VOL. LIX, p. 256, 1947
All Rights Reserved
PRINTED IN GREAT BRITAIN

DISLOCATIONS IN A SIMPLE CUBIC LATTICE

DISLOCATIONS IN A SIMPLE CUBIC LATTICE

By F. R. N. NABARRO,
Royal Society Warren Research Fellow

Communicated by N. F. Mott, F.R.S.; MS. received 23 September 1946

ABSTRACT. The properties of dislocations are calculated by an approximate method due to Peierls. The width of a dislocation is small, displacements comparable with the interatomic distance being confined to a few atoms. The shear stress required to move a dislocation in an otherwise perfect lattice is of the order of a thousandth of the "theoretical" shear strength. The energy and effective mass of a single dislocation increase logarithmically with the size of the specimen. A pair of dislocations of opposite sign in the same glide plane cannot be in stable equilibrium unless they are separated by a distance of the order of 10 000 lattice spacings. If an external shear stress is applied there is a critical separation of the pair of dislocations at which they are in unstable equilibrium. The energy of this unstable state is the activation energy for the formation of a pair of dislocations. It depends on the external shear, and for practical stresses is of the order of 7 electron volts per atomic plane.

The size and energy of dislocations in real crystals are unlikely to differ greatly from those calculated: the stress required to move a dislocation and the critical separation of two dislocations may be seriously in error.

§1. INTRODUCTION

VOLTERRA's theory of elastic dislocations has been made the basis of a theory of the plastic deformation of crystals. This theory has explained many of the characteristics of plastic deformation, but Volterra's classical assumptions of a continuous medium obeying Hooke's Law even under large strains do not allow a detailed investigation of the displacement of the atoms in the core of a dislocation in a real crystal. Peierls (1940) has shown that by using suitable approximations it is possible to take account of the periodic structure of the crystal in the glide plane, and to determine the size of a dislocation in a simple cubic lattice and the shear stress necessary to move such a dislocation across its glide plane. The first part of this paper amplifies the



previous arguments and corrects certain errors in Peierls's paper. In the second part, the solution for a single dislocation is extended to the case of a pair of dislocations of opposite sign held in equilibrium in the same glide plane by an external shear stress. The energy of this system, which is the activation energy for the formation of a pair of dislocations in a stressed crystal, is determined. Finally, a brief discussion is given of the relation of the properties of this idealized model to those of a real crystal.

§2. THE MODEL

The model considered is a simple cubic lattice containing a dislocation of the kind which Burgers (1940) calls "a dislocation of edge type". It is shown in figure 1. The slip plane $P(z=0)$ divides the crystal into an upper part a and a lower part b. These are symmetrical about the vertical plane $S(x=0)$. The central plane S lies in a lattice plane in the upper half-crystal a, and half way between two lattice planes in b.

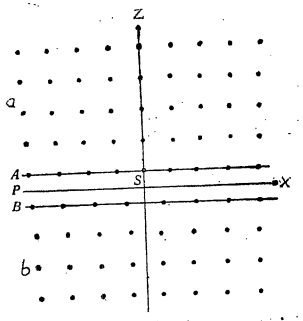

Figure 1. A single dislocation in an unstrained crystal.

The y axis at right angles to the plane of the figure (i.e. the line in which the plane S meets the slip plane P) is called the *dislocation line*. In the neighbourhood of this line the atoms of a are moved inwards and those of b are moved apart, so that at great distances from the dislocation line the two planes A and B, which are immediately above and below the slip plane, are again in correct alignment, A containing, however, one row of atoms more than B. This type of dislocation, which may be formed by cutting a perfect crystal along the half-plane $x=0$, $z>0$, and introducing a single extra layer of atoms into this half-plane, can also be represented as a Taylor dislocation, formed by cutting the same crystal along the half-plane $z=0$, $x<0$ and sliding the upper layer of atoms A to the right over the lower layer B until the relative displacement of the planes at large distances from the dislocation line is one lattice spacing (Taylor, 1934). In Burgers' form, the crystal containing a dislocation is in equilibrium with no external forces, whereas external forces are required to maintain the equilibrium of a crystal containing a dislocation of Taylor's form.

The atoms in the plane A are then subject to two forces: (i) the interaction with other atoms in the half-crystal a; this force tends to spread the compression uniformly over the plane A, i.e. to extend the dislocation: (ii) the interaction

with atoms in b, particularly with those in the adjacent layer B; this has a tendency to bring as many atoms of A as possible into correct alignment with B, i.e. to shorten the dislocation. In equilibrium these two forces balance.

If the extension of the dislocation is large compared with the atomic distance d, both the horizontal displacement u and the vertical displacement w of the atoms in A vary slowly from atom to atom. The relative displacement of neighbouring atoms within each half-crystal is then much smaller than d. In these circumstances each half-crystal may be considered as an elastic continuum. Moreover, for the sake of simplicity, it will be assumed to be elastically isotropic. Then the force (i) is simply the force that has to be applied to the plane surface of an elastic continuum in order to make its horizontal displacement at the surface equal to $u(x)$. This force can be obtained by the usual methods of the theory of elasticity.

To the same degree of approximation, it may be assumed that the horizontal component of the force (ii) depends only on the horizontal displacement of the atoms of A relative to the atoms of B immediately underneath. If $u(x)$ and $\bar{u}(x)$ are the two displacements, the force acting on a surface element near x is a periodic function of $u-\bar{u}$ with the period d. In a first approximation it may be represented as a simple sinusoidal function of the form

$$\text{const. } \sin 2\pi(u-\bar{u})/d. \qquad \ldots\ldots(1)$$

The probable deviation of the law of force from this form, and the consequences of such a deviation, are discussed in §7. If the simple sine law is a sufficient approximation, the constant can be found from the shear modulus, provided it is assumed that the force arising between two lattice planes in a state of shear is independent of the displacement of the other lattice planes. This assumption is not strictly correct, but it is probably a reasonable approximation. By considering a small shear of angle $(u-\bar{u})/d$ it may be seen that the constant is $-\mu/2\pi$.

The dislocation is considered to be very long in the direction of the y axis, and the problem is accordingly one of plane strain. Further, it is assumed that the vertical component of the force (ii) depends only on the relative vertical displacement in A with respect to that in B. Since the tangential forces applied to A and B are equal and opposite, their vertical displacements are equal, and the vertical force (ii) vanishes. This assumption again is not actually correct, since in places where the atoms in the two planes are out of alignment, the equilibrium value of their vertical distance will obviously be changed. A separate discussion is required in order to take this effect into account, and it depends on the detailed structure of the crystal lattice.

§3. THE GOVERNING EQUATION

It is first necessary to find the integral equation connecting the displacement $u(x')$ of a point x' on the surface A with the tangential stress $p_{xz}(x)$ applied to this surface, assuming that the strains e_{xy}, e_{yy}, e_{zy} vanish across the surface A in accordance with the assumption of §2.

The problem may be solved by assuming that the stresses are expressed in terms of a stress function χ in the usual form:

$$\left.\begin{aligned} p_{xx} &= \frac{\partial^2\chi}{\partial z^2}, \\ p_{xz} &= -\frac{\partial^2\chi}{\partial x \partial z}, \\ p_{zz} &= \frac{\partial^2\chi}{\partial x^2}, \end{aligned}\right\} \qquad \ldots\ldots(2)$$

while for plane strain the components of strain can be expressed in terms of the components of stress in the form

$$4\mu(\lambda+\mu)e_{xx} = (\lambda+2\mu)p_{xx} - \lambda p_{zz}, \text{ etc.},$$

where λ and μ are Lamé's elastic contants. Expressing λ in terms of μ and Poisson's ratio σ by means of the relation

$$\frac{\lambda}{\mu} = \frac{2\sigma}{1-2\sigma}$$

leads to

$$2\mu e_{xx} = (1-\sigma)p_{xx} - \sigma p_{zz}, \qquad \ldots\ldots(3)$$

The integral equation may be obtained by choosing a stress function

$$\chi = Z(e^{-mZ}\cos mx - 1), \qquad \ldots\ldots(4)$$

where $Z = z - \frac{1}{2}d$.

This stress function is easily shown to satisfy the equation $\nabla^4\chi = 0$, and leads to

$$p_{xx} = -m(2-mZ)e^{-mZ}\cos mx,$$
$$p_{xz} = m(1-mZ)e^{-mZ}\sin mx,$$
$$p_{zz} = -m^2 Z e^{-mZ}\cos mx.$$

On the surface A, $Z=0$, and p_{zz} vanishes across this surface, as has been assumed. The tangential stress is given by

$$p_{xz} = m\sin mx, \qquad \ldots\ldots(5)$$

while
$$p_{xx} = -2m\cos mx.$$

It follows from (3) that

$$\mu e_{xx} = -(1-\sigma)m\cos mx$$

and by integration that

$$\mu u(x) = -(1-\sigma)\sin mx. \qquad \ldots\ldots(6)$$

A more general displacement $u(x)$ may now be expressed as a Fourier integral of the form

$$u(x) = \frac{1}{\pi}\int_0^\infty \int_{-\infty}^{\infty} \cos m(x'-x)\,.\,u(x')dx'dm. \qquad \ldots\ldots(7)$$

Since the equations of elasticity are linear, the components of displacement corresponding to each value of m may be considered separately. A typical component is of the form

$$\frac{1}{\pi}\int_{-\infty}^{\infty} \cos m(x'-x)\,.\,u(x')dx'$$
$$=\frac{1}{\pi}\int_{-\infty}^{\infty} \cos mx'\,.\,u(x')dx'\,.\cos mx$$
$$+\frac{1}{\pi}\int_{-\infty}^{\infty} \sin mx'\,.\,u(x')dx'\,.\sin mx.$$

Each term is of the same form as (6) or the corresponding expression involving $\cos mx$, and the corresponding tangential stresses are, therefore, given by (5) and the corresponding expression. The resultant tangential stress is given formally by

$$p_{xz}=-\frac{\mu}{\pi(1-\sigma)}\int_0^{\infty}\int_{-\infty}^{\infty} m\cos m(x'-x)\,.\,u(x')dx'dm. \qquad \ldots\ldots(8)$$

Integrating by parts, and presupposing that $u(\infty)=u(-\infty)=0$, gives

$$\pi(1-\sigma)p_{xz}/\mu=\int_0^{\infty}\int_{-\infty}^{\infty} \sin m(x'-x)\frac{du}{dx'}dx'dm.$$

A second formal integration by parts leads to

$$\pi(1-\sigma)p_{xz}/\mu=\lim_{m\to\infty}\int_{-\infty}^{\infty}\frac{1-\cos m(x'-x)}{x'-x}\frac{du}{dx'}dx', \qquad \ldots\ldots(9)$$

and if du/dx' is a sufficiently regular function, the term involving $\cos m(x'-x)$ tends to 0 as m tends to ∞. (For a rigorous discussion of this type of transformation see Titchmarsh, 1937.) The general relation now becomes

$$p_{xz}=\frac{\mu}{\pi(1-\sigma)}\int_{-\infty}^{\infty}\frac{1}{x'-x}\frac{du}{dx'}dx', \qquad \ldots\ldots(10)$$

where the Cauchy principal value of the integral is taken.

This equation may be compared with that derived from equation (1), which is

$$p_{xz}=-\frac{\mu}{2\pi}\sin[2\pi(u-\bar{u})/d].$$

Writing $\phi=u-\bar{u}=2u$, elimination of p_{xz} yields

$$\int_{-\infty}^{\infty}\frac{1}{x-x'}\frac{d\phi}{dx'}dx'=(1-\sigma)\sin\frac{2\pi\phi}{d}. \qquad \ldots\ldots(11)$$

This equation differs slightly from that previously given.

§ 4. THE SOLUTION FOR A SINGLE DISLOCATION

The solution which represents a single dislocation with its centre at the origin, as in figure 1, is

$$\frac{\phi}{d}=-\frac{1}{\pi}\tan^{-1}\frac{2x(1-\sigma)}{d}. \qquad \ldots\ldots(12)$$

This solution was given by Peierls. It may be verified by substituting in (11), resolving the integral into partial fractions, and taking the Cauchy principal value of the divergent term.

The width of the dislocation is small, the displacement falling to half its extreme value at a distance $d/2(1-\sigma)$ from the central plane S. The original assumption that the dislocation is spread over a large number of atoms has thus led to a contradiction and, if the sinusoidal law of force (1) is valid and the neglect of vertical forces is justified, a dislocation must be confined to a region of linear dimensions only a few atomic radii.

The components of displacement in parts of the crystal away from the slip plane may be obtained by expressing (12) as a Fourier integral in the form

$$u=\tfrac{1}{2}\phi=-\frac{d}{2\pi}\int_0^{\infty} e^{-\frac{md}{2(1-\sigma)}}\frac{\sin mx}{m}dm. \qquad \ldots\ldots(13)$$

Comparing (13) with (6) and (4) shows that the stress function is

$$\chi=-\frac{\mu d}{2\pi(1-\sigma)}\int_0^{\infty} e^{-\frac{md}{2(1-\sigma)}}Z\frac{e^{-mZ}\cos mx-1}{m}dm. \qquad \ldots\ldots(14)$$

The displacements corresponding to (4) are given (Love, 1944) by

$$\left.\begin{aligned}2\mu u&=[mZ-2(1-\sigma)]e^{-mZ}\sin mx,\\ 2\mu w&=[(mZ-1)+2(1-\sigma)]e^{-mZ}\cos mx+1-2(1-\sigma),\end{aligned}\right\} \qquad \ldots\ldots(15)$$

and the displacements corresponding to (14) follow immediately. The singularity at the origin, which is represented in elastic dislocation theory by a factor $[x^2+z^2]$ in the denominator, now disappears, and this factor is replaced by $[x^2+(z+\zeta)^2]$, where $\zeta=d/2(1-\sigma)$.

The energy of unit length of such a dislocation in an infinite crystal is infinite, for the shearing strain at a large distance r from the axis is of the form B/r. The energy density is of the order $1/r^2$, and the total elastic energy of order $\int^{\infty}(1/r^2)2\pi r\,dr$, which diverges. A finite energy is obtained only by considering a pair of dislocations of opposite sign.

A dislocation has an effective mass, for as it moves across the glide plane the displacements of all points in the body alter. If the dislocation moves across the glide plane with velocity V, the components of velocity of any other point in the body are $V\,\partial u/\partial x$, $V\,\partial w/\partial x$. If the density of the crystal is ρ, the kinetic energy associated with unit length of dislocation is

$$\tfrac{1}{2}\rho V^2\int\int\left[\left(\frac{\partial u}{\partial x}\right)^2+\left(\frac{\partial w}{\partial x}\right)^2\right]dx\,dz.$$

This is of the same form as the elastic energy, and diverges logarithmically.

If the dislocation is situated in a finite crystal of linear dimensions L, the elastic energy of unit length of the dislocation is of order $\mu d^2\log L/d$, and its effective mass per unit length is of order $\rho d^2\log L/d$.

§ 5. THE SOLUTION FOR A PAIR OF DISLOCATIONS

It has been suggested that plastic flow may be initiated by the simultaneous production of a pair of dislocations of opposite sign moving in the same glide plane. The form of a crystal under external shear stress, and containing such a pair of dislocations, is shown in figure 2. It is similar to the *Verhakung* discussed by Dehlinger (1929). Such a system cannot be in stable equilibrium. The external stress causes the dislocations to separate, and their separation leads to a shearing motion of the upper and lower parts of the crystal which yields to the external stress. The stress field surrounding each dislocation opposes the external stress in the neighbourhood of the other dislocation, and gives rise to an attraction between the dislocations. For a given applied stress T

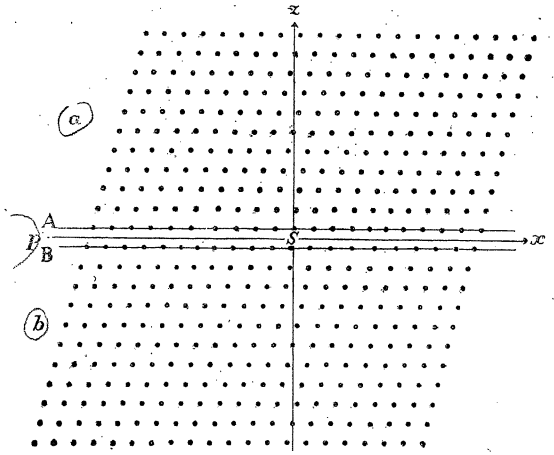

Figure 2. A pair of dislocations in a sheared crystal. The angle of shear shown is ten times as great as that required to maintain equilibrium in the planes A and B.

there is a critical separation $r(T)$ at which the dislocations are in unstable equilibrium, and it is this state of unstable equilibrium which is calculated.

In the case of figure 1 it was convenient to measure u and $\bar{u}$ from positions such that $\phi=0$ represented the greatest possible misfit of the lattices above and below the glide plane: for the double dislocation of figure 2 it is more convenient to represent this misfit by $\phi=\frac{1}{2}d$ and exact registration of the lattices by $\phi=0$ or $\phi=d$. This changes the sign of the sine function in equations (1) and (11).

The solution for two dislocations is then

$$\frac{\phi}{d}=\frac{1}{\pi}\cot^{-1}\left[\frac{(1-\sigma)^2\sin\theta}{d^2}\,x^2-\cot\theta\right]+\frac{\theta}{4\pi}, \qquad \ldots\ldots(16)$$

where θ is a parameter defining the separation of the dislocations and that value of $\cot^{-1}$ is taken which lies between 0 and π. This solution may be verified by substitution.

The displacements in rows A and B in figure 2 correspond to $\theta=\pi/10$.

Substituting in (10), the tangential stress required to maintain this displacement is

$$p_{xz}=\frac{\mu}{2\pi}\left(\sin\frac{2\pi\phi}{d}-\sin\frac{\theta}{2}\right), \qquad \ldots\ldots(17)$$

whereas the force produced by the atoms in the other half of the crystal is

$$p_{xz}=\frac{\mu}{2\pi}\sin\frac{2\pi\phi}{d}. \qquad \ldots\ldots(18)$$

The actual tangential stress (18) exceeds the stress (17) required to maintain the displacement (16) by a constant quantity $(\mu/2\pi)\sin\frac{1}{2}\theta$. The upper and lower halves of the crystal can only remain in equilibrium if external stresses of this amount are applied to them. If θ is small, this stress, $\mu\theta/4\pi$, produces a uniform shearing strain of $\theta/4\pi$, which agrees with the strain between rows A and B given by (16) for large values of x.

If θ is small the two dislocations are widely separated. Their centres may be defined as the points $x=\pm d(\cos\theta)^{\frac{1}{2}}/(1-\sigma)\sin\theta$, or for small θ, $x=\pm d/(1-\sigma)\theta$.

It is now possible to calculate the energy of this pair of dislocations. Since the dislocations are embedded in an infinite crystal under a uniform shear stress $\mu\theta/4\pi$, the total energy of the system is infinite. The energy which it is important to calculate is the activation energy required to produce the equilibrium configuration of figure 2 when the crystal is already uniformly stressed. Once this energy is supplied, further separation of the dislocations releases energy.

The energy of the crystal in figure 2 differs from the energy of the uniformly strained crystal by three contributions:

(a) the forces acting across the boundary P do work on each half-crystal;

(b) the potential energy of attraction between the atoms in rows A and B is increased;

(c) the separation of the dislocations represents a shear of one half-crystal over the other, and in this motion work is done by the external shearing forces.

These contributions may be evaluated separately.

(a) *Work done by forces acting across P*

Each half of the crystal is assumed to obey Hooke's Law, and its elastic energy may be expressed in terms of the work done by the forces acting across the plane P by integrals of the form $\frac{1}{2}\int u_x p_{xz}dx$. If the energy is referred to the crystal under uniform shear as zero, the total energy is

$$-2\int_{-\infty}^{\infty}\tfrac{1}{2}[u(x)p_{xz}(x)-u(\infty)p_{xz}(\infty)]\,dx$$
$$=-\frac{\mu}{4\pi}\int_{-\infty}^{\infty}\left[\phi\sin\frac{2\pi\phi}{d}-\frac{d\theta}{4\pi}\sin\frac{\theta}{2}\right]dx, \qquad \ldots\ldots(19)$$

where ϕ is given by (16).

The expression (19) may be evaluated by writing $x=d(\cos\theta)^{\frac{1}{2}}y/(1-\sigma)\sin\theta$, and becomes

$$-\frac{\mu d^2(\cos\theta)^{\frac{1}{2}}}{4\pi^2(1-\sigma)\sin\theta}\int_{-\infty}^{\infty}[\chi\sin 2\chi-\tfrac{1}{4}\theta\sin\tfrac{1}{2}\theta]\,dy, \qquad \ldots\ldots 20)$$

where $$\cot(\chi-\tfrac{1}{4}\theta)=(y^2-1)\cot\theta.$$

It is easily shown that the integral in (20) is equal to the integral of

$$\frac{1}{2i}\cdot\frac{2(y^2-1)\cot\theta\cos\tfrac{1}{2}\theta+[(y^2-1)^2\cot^2\theta-1]\sin\tfrac{1}{2}\theta}{(y^2-1)^2\cot^2\theta+1}\log\frac{(y^2-1)\cot\theta+i}{(y^2-1)\cot\theta-i}$$
$$+\frac{\theta}{2}\cdot\frac{(y^2-1)\cot\theta\cos\tfrac{1}{2}\theta-\sin\tfrac{1}{2}\theta}{(y^2-1)^2\cot^2\theta+1}$$

taken anti-clockwise round the contour of figure 3. This function has essential singularities of the form $(\log z)/z$ at the points P, $Q=\pm(\cos\theta)^{-\frac{1}{2}}e^{\pm\frac{1}{2}i\theta}$. If cuts are made joining P and Q to the point $i\eta$, where η is real and very small, and

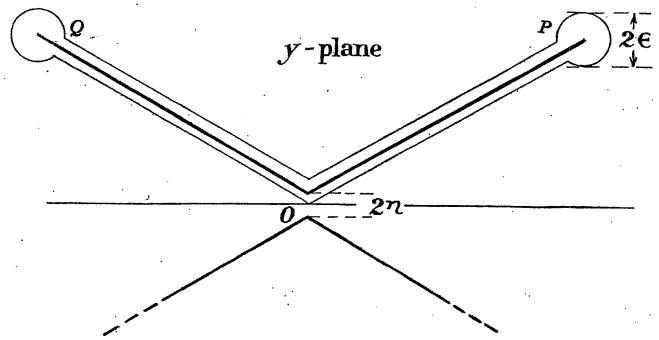

Figure 3. Cuts and contours for the integration of (20).

corresponding cuts in the lower half-plane, the function is single-valued and the logarithm changes by $\pm i\pi$ on crossing the boundaries OP, OQ. The term independent of the logarithm is always single-valued, and has only simple poles at P and Q. The residues are equal and opposite, and this term makes no contribution to the integral. The contribution of the other may be evaluated by taking the loops round P and Q to be equal circles of small radius ϵ. The sum of the integrals round these circles is

$$\frac{\pi\sin\theta}{(\cos\theta)^{\frac{1}{2}}}\left[\log\frac{\sin\theta}{(\cos\theta)^{\frac{1}{2}}}-\log\epsilon\right]. \qquad \ldots\ldots(21)$$

On the straight contours OP, PO write $y=\rho(\cos\theta)^{-\frac{1}{2}}e^{\frac{1}{2}i\theta}$, and the limits of ρ are 0 and $1-\epsilon(\cos\theta)^{\frac{1}{2}}$.

The integrand on OP exceeds the integrand at the neighbouring point on PO by

$$\xi(\rho)=$$
$$\pi\frac{2[\cot\theta+i\rho^2/(\rho^2-1)]\cos\tfrac{1}{2}\theta+[(\rho^2-1)\cot^2\theta+2i\rho^2\cot\theta-(\rho^4+1)/(\rho^2-1)]\sin\tfrac{1}{2}\theta}{(\rho^2-1)\cot^2\theta+2i\rho^2\cot\theta-(\rho^2+1)}$$

and the sum of the integrals along these two contours OP, PO is

$$\frac{e^{\frac{1}{2}i\theta}}{(\cos\theta)^{\frac{1}{2}}}\int_0^{1-\epsilon(\cos\theta)^{\frac{1}{2}}}\xi(\rho)d\rho.$$

The sum of the integrals along OQ and QO is the complex conjugate of this. In the limit of small ϵ the sum of these four integrals is $\pi\sin\theta(\cos\theta)^{-\frac{1}{2}}$ times

$$1+\log\tan\tfrac{1}{2}\theta+\log\epsilon+\tfrac{1}{2}\log\cos\theta-\log 2. \qquad \ldots\ldots(22)$$

On adding to this the contribution of the small circular contours, the terms in $\log\epsilon$ cancel, and the integral in (20) becomes $\pi\sin\theta(\cos\theta)^{-\frac{1}{2}}F$, where

$$F=1+\log\tan\tfrac{1}{2}\theta+\log\sin\theta-\log 2. \qquad \ldots\ldots(23)$$

The contribution to the total energy of the forces acting across the plane P is now

$$-\mu d^2F/4\pi(1-\sigma). \qquad \ldots\ldots(24)$$

(b) *Potential energy of attraction between A and B*

The potential energy, referred to the homogeneously strained crystal, is

$$\frac{\mu d^2}{4\pi^2}\int_{-\infty}^{\infty}[\cos\tfrac{1}{2}\theta-\cos 2\pi\phi/\boldsymbol{d}]\,dx. \qquad \ldots\ldots(25)$$

On substituting for ϕ and again changing the variable, as in equations (19) and (20), this becomes

$$\frac{\mu d^2(\cos\theta)^{\frac{1}{2}}}{4\pi^2(1-\sigma)\sin\theta}\int_{-\infty}^{\infty}[\cos\tfrac{1}{2}\theta-\cos 2\chi]\,dy. \qquad \ldots\ldots(26)$$

The integrand has simple poles in the upper half-plane at $y=\pm(\cos\theta)^{-\frac{1}{2}}e^{\pm\frac{1}{2}i\theta}$. On evaluating the residues the integral is easily shown to be $2\pi\sin\theta/(\cos\theta)^{\frac{1}{2}}$, and the contribution of the attraction between A and B to the energy is

$$\mu d^2/2\pi(1-\sigma). \qquad \ldots\ldots(27)$$

As was to be expected, this contribution remains finite when θ tends to zero.

(c) *Work done by external forces*

If a uniform shear stress $(\mu/2\pi)\sin\tfrac{1}{2}\theta$ is maintained on the external surface of the crystal during the formation of the pair of dislocations, the external forces do work

$$\frac{\mu}{2\pi}\sin\tfrac{1}{2}\theta\int_{-\infty}^{\infty}\left[\phi(x)-\frac{d\theta}{4\pi}\right]dx. \qquad \ldots\ldots(28)$$

As before, this may be written

$$\frac{\mu d^2\sin\tfrac{1}{2}\theta(\cos\theta)^{\frac{1}{2}}}{2\pi^2(1-\sigma)\sin\theta}\int_{-\infty}^{\infty}\cot^{-1}[(y^2-1)\cot\theta]\,dy. \qquad \ldots\ldots(29)$$

Integrating by parts, the integral in (29) becomes

$$2\tan\theta\int_{-\infty}^{\infty}y^2\,dy/[(y^2-1)^2+\tan^2\theta],$$

which may be evaluated from its residues as $2\pi\cos\tfrac{1}{2}\theta/(\cos\theta)^{\frac{1}{2}}$. The work done by the external forces, which is to be subtracted from the internal energy of the

crystal in order to obtain the activation energy for the formation of a pair of dislocations, is, therefore,

$$\mu d^2/2\pi(1-\sigma). \qquad \ldots\ldots(30)$$

This is finite for small θ, because it represents the work done by forces of order θ acting through distances of order $1/\theta$.

The total activation energy is (24)+(27)−(30). For small θ this is approximately $\mu d^2 \log(2/\theta)/2\pi(1-\sigma)$. Its dependence on the distance between the dislocations agrees with that obtained by Koehler (1941).

To estimate the order of magnitude of this quantity, take $\mu = 4{\cdot}4 \times 10^{11}$ dynes/cm^2, $\sigma = \frac{1}{4}$, and for d take the distance of closest approach of two copper atoms, $2{\cdot}5 \times 10^{-8}$ cm. Then the coefficient $\mu d^2/2\pi(1-\sigma)$ is 6×10^{-5} erg/cm., or $1{\cdot}5 \times 10^{-12}$ erg per atom-pair. This is 1 electron volt for each atomic plane even for large strains of the order $\theta = 1$. For the practical elastic limits of metallic single crystals $\theta \simeq 10^{-3}$ and the energy is 7 electron volts per atomic plane.

§ 6. THE SHEAR STRESS REQUIRED TO MOVE A SINGLE DISLOCATION

In the previous section, the energy of a pair of dislocations has been calculated by treating the two halves of the crystal as elastic continua, and integrating over the interfaces A and B. To this approximation the energy of a single dislocation in a crystal free from external stress is independent of the position of the dislocation in the crystal. The dislocation is in neutral equilibrium, and will move under the smallest external shearing stress, since its motion causes a relative displacement of the half-crystals a and b in the x-direction. On the other hand if the atomic structure is taken into account, the energy of a dislocation must, in the absence of a stress, depend on its exact position, i.e. on whether the plane of symmetry passes through a row of atoms or not. Hence the dislocation will have a number of positions of stable equilibrium, and these will persist even under a stress until this exceeds a certain magnitude.

The stress required to move a dislocation may be estimated by assuming that each half-crystal a and b retains its form as the dislocation moves, so that the contribution analogous to (a) in § 5 is independent of the position of the dislocation. The contribution analogous to (b) is to be evaluated by replacing the integral (25) by the corresponding sum over all atoms in the planes A and B. (It is not sufficient to sum over the atoms of plane A alone, for this would yield an interaction energy which was a periodic function of the displacement of the dislocation with period d. The geometrical form of the dislocation, and therefore its energy, is in fact restored by a displacement of only $\frac{1}{2}d$.) Since the energy is an energy of interaction between the atoms of A and the atoms of B, the sum must be halved to obtain the energy. Taking αd as the displacement of the centre of the dislocation from the position shown in figure 1, the energy becomes

$$\frac{1}{2}\frac{\mu d^2}{4\pi^2}\sum_{n=-\infty}^{\infty}[\text{const.} + \cos 2\{\tan^{-1} 2(1-\sigma)(\alpha+\tfrac{1}{2}n)\}]. \qquad \ldots\ldots(31)$$

This may be transformed by using the relation

$$\sum_{-\infty}^{\infty} f(n) = \sum_{-\infty}^{\infty}\int_{-\infty}^{\infty} f(x)\cos 2\pi xs\,dx \qquad \ldots\ldots(32)$$

into

$$\frac{\mu d^2}{8\pi^2}\int_{-\infty}^{\infty}[\text{const.} + \cos 2\{\tan^{-1} 2(1-\sigma)(\alpha+\tfrac{1}{2}x)\}]\,dx$$

$$+\frac{\mu d^2}{4\pi^2}\sum_{s=1}^{\infty}\int_{-\infty}^{\infty}[\text{const.} + \cos 2\{\tan^{-1} 2(1-\sigma)(\alpha+\tfrac{1}{2}x)\}]\cos 2\pi xs\,dx.$$

Writing

$$z = 2(1-\sigma)(\alpha+\tfrac{1}{2}x)$$

reduces this to

$$\frac{\mu d^2}{8\pi^2(1-\sigma)}\int_{-\infty}^{\infty}[\text{const.} + \cos\{2\tan^{-1} z\}]\,dz$$

$$+\frac{\mu d^2}{4\pi^2(1-\sigma)}\sum_{s=1}^{\infty}\int_{-\infty}^{\infty}[\text{const.} + \cos\{2\tan^{-1} z\}]\cos 2\pi s\left(\frac{z}{1-\sigma} - 2\alpha\right)dz.$$

The first term is an infinite constant independent of α, and the second reduces to

$$\frac{\mu d^2}{2\pi^2(1-\sigma)}\sum_{s=1}^{\infty}\cos 4\pi s\alpha\int_{-\infty}^{\infty}\cos\left(\frac{2\pi sz}{1-\sigma}\right)\frac{dz}{1+z^2}. \qquad \ldots\ldots(33)$$

The integral in (33) is equal to $\int_{-\infty}^{\infty} e^{ikz}dz/(1+z^2)$, which is readily shown by contour integration to be πe^{-k}, where $k = 2\pi s/(1-\sigma)$. The energy is then

$$v = \frac{\mu d^2}{2\pi(1-\sigma)}\sum_{s=1}^{\infty} e^{-\frac{2\pi s}{1-\sigma}}\cos 4\pi s\alpha. \qquad \ldots\ldots(34)$$

The work done in an infinitesimal displacement δ of the dislocation is

$$\frac{\delta}{d}\frac{dv}{d\alpha} = -\frac{2\mu d\delta}{1-\sigma}\sum_{s=1}^{\infty} se^{-\frac{2\pi s}{1-\sigma}}\sin 4\pi s\alpha.$$

The term in $s=1$ dominates this sum, and has a maximum value

$$\frac{2\mu d\delta}{1-\sigma}e^{-\frac{2\pi}{1-\sigma}}. \qquad \ldots\ldots(35)$$

The work done by an external shearing stress T in this displacement is $Td\delta$, and by comparison with (35) it follows that the smallest external stress which will cause a single dislocation to move continuously through the lattice is given by

$$T = \frac{2\mu}{1-\sigma}e^{-\frac{2\pi}{1-\sigma}}, \qquad \ldots\ldots(36)$$

whereas the shearing stress at which one lattice plane moves rigidly over another is $\mu/2\pi$. The ratio of the stress required to move a dislocation to the theoretical shear strength of a perfect lattice is

$$\frac{4\pi}{1-\sigma}e^{-\frac{2\pi}{1-\sigma}}. \qquad \ldots\ldots(37)$$

Since the width of the dislocation given by (12) is only half that given by (3) in the original note, the energy of a dislocation is more sensitive to its position in the lattice, and the ratio (37) is of a larger order of magnitude than the original estimate. Values are:

Poisson's ratio	0·2	0·3	0·4
Ratio of stresses	6×10^{-3}	2×10^{-3}	6×10^{-4}

Expression (37) differs from Peierls's expression not only in replacing $(1-\sigma)$ by $2(1-\sigma)$, but also in the form of the coefficient. This is because Peierls replaces the integrals (19) and (25) by the corresponding sums, whereas in (37) only (25) has been replaced by a sum. The order of magnitude of the result is the same on each approximation, the exponential factors agreeing. Any calculation of the effect of atomic structure which is based on the result (11) of the theory of a continuous medium is really inconsistent, and the answer is therefore undefined.

The shear stress T given by (36) would cause a uniform shear of the lattice through a small angle $\theta = T/\mu$, and this stress would just equal the mutual attraction of a pair of dislocations of unlike sign in the same glide plane at a distance apart of $2d/(1-\sigma)\theta$. To this approximation, a pair of dislocations in an unstressed crystal will coalesce if they are close together, but their attraction will not overcome the forces anchoring them to their places in the lattice if their separation exceeds

$$d e^{\frac{2\pi}{1-\sigma}}. \qquad \ldots\ldots(38)$$

Numerically this implies:—

Poisson's ratio	0·2	0·3	0·4
Critical separation	$2500\,d$	$8000\,d$	$35000\,d$

§7. DISCUSSION

To the approximation considered here, dislocations in a lattice have the following properties. The width of a dislocation is small, displacements comparable with the interatomic distance being confined to a few atoms. The energy required to form a pair of dislocations in a crystal under moderate shear stress is large, of the order of 10 electron volts for each atomic plane. The energy required to form even a short dislocation far exceeds the thermal energy of an atom at room temperature. A single dislocation will not move freely through a lattice under very small stresses, but will do so under shear stresses of the order of a thousandth of the theoretical shear strength of the perfect lattice. This figure is of the same order of magnitude as that commonly accepted as the elastic limit of a real single crystal. Two dislocations of opposite sign in the same glide plane attract each other with a force which at large distances is inversely proportional to the distance between them, and they will run together and coalesce unless they are separated by a distance of the order of 10000 lattice spacings. This spacing is of the same order as the size of the mosaic blocks of which real crystals are usually composed, and may represent the reason for the appearance of this characteristic length in the growth of real crystals.

It is, however, necessary to consider how far this approximate treatment of a simplified model can be expected to represent the properties of a real crystal. The first approximation is the use of a simple cubic lattice. Glide processes are best understood in face-centred cubic and hexagonal metals. In both cases glide takes place in a close-packed direction over close-packed planes, but the actual geometrical form of the dislocation in such lattices is not known or easy to visualize. It seems unlikely that this approximation should greatly affect the width or the energy of a dislocation, but the stress required to move a dislocation, and the critical separation of two dislocations, which depend very sensitively on the width of a dislocation, might be entirely different.

The next approximation is the assumption that the crystal is isotropic. It is easy to show (cf. Appendix) that the elastic modulus for shearing a cubic crystal in the direction $(1\bar{1}0)$ across a (111) plane is $4[s_{44}+\frac{1}{3}(s_{11}-s_{12}-2s_{44})]$. The anisotropy term $\frac{1}{3}(s_{11}-s_{12}-2s_{44})$ is only 20% of s_{44} for Cu, Ag and Au, so it seems likely that anisotropy will not be of great importance. Here again the stress required to move a dislocation depends critically on its width.

Probably the most serious assumption is the sinusoidal law of force (1). In the majority of metals, the ionic shells are in contact, and for many purposes it is satisfactory to regard their lattices as composed of hard spheres in contact. Dr. Orowan has pointed out in discussion that such an extreme model does not have an elastic modulus in the usual sense, because a finite force is required to produce an infinitesimal displacement of two neighbouring layers of atoms. If this crude picture is refined somewhat by considering the spheres to be held apart by forces which vary very much more rapidly with distance than the attractive forces, the work required to slide one layer of atoms a distance $\frac{1}{2}d$ over the next layer is still much less than μd^2, which is the order of magnitude corresponding to (1). It follows from the discussion of §1 that if in fact the surface energy is much less than that corresponding to a sine law, the width of a dislocation will be greater than that calculated, since an increase in the width reduces its elastic energy without a corresponding increase in its surface energy. Its total energy is less (but could hardly be so much reduced that pairs of dislocations could be formed by thermal agitation) and it moves more easily.

The following argument, due to Professor Mott, shows that this correction is not large. Consider a two-dimensional model, which in its equilibrium state consists of close-packed cylinders (figure 4*a*). In the dislocated state the cylinders are arranged as in figure 4*b*.

Let the distance between the layers of atoms on either side of the slip plane be z, while each atom in the upper row is displaced horizontally a distance ϕ from its neighbour in the lower row. It is assumed in the argument that the only forces acting are a long-range force, the potential of which depends only on the volume of the crystal, and short-range repulsions between neighbouring ions. This is not correct, for the alkali metals, in which the short-range repulsion is small, have rigidities comparable with their bulk moduli. These neglected forces are such that the configuration of figure 4*a* is one of stable equilibrium; when the magnitude of the other forces is estimated from the observed rigidity of the crystal under small displacements it is therefore over-estimated. The neglected forces depend on long-range interactions alone, and are consequently

smoothly varying functions of ϕ which cannot depart far from a sinusoidal form. The estimate of the departure of the law of force from a sinusoidal form which is made by neglecting these forces must exceed the true departure.

It will be convenient to represent the energy of the cohesive forces by an expression of the form Bz^2, that is to say, proportional to V^2, where V is the atomic volume. In fact the electrostatic energy is proportional to $V^{-\frac{1}{3}}$, and is opposed by the Fermi energy, which is proportional to $V^{-\frac{2}{3}}$. The constant B is determined by the condition that the long-range force should equal the short-range repulsion at the equilibrium interatomic distance. It may be shown that for larger values of V the deviation of the true energy from that given by the approximate expression Bz^2 is greatest when the Fermi energy is neglected, and that if the Fermi energy is neglected the approximate formula over-estimates the difference of the energies of figures 4*a* and 4*b* by less than 20%. The repulsive potential, which falls off rapidly with distance, is taken to be of the form $Ae^{-\beta r^2}$, where $\beta d^2 \gg 1$.

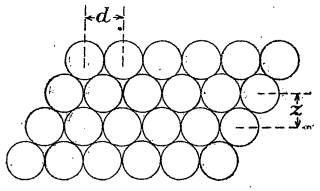

Figure 4*a*. A normal crystal ($\phi=\frac{1}{2}d$).

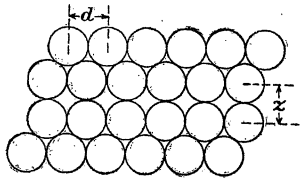

Figure 4*b*. A dislocated crystal ($\phi=0$).

The energy per atom is then

$$W = Bz^2 + A \sum_{n=-\infty}^{\infty} e^{-\beta[(nd+\phi)^2+z^2]}. \qquad \ldots\ldots(39)$$

For each value of ϕ, the equilibrium value of z is given by $\partial W/\partial z = 0$, which leads to

$$W = \frac{B}{\beta}\left[1+\log\left\{\frac{\beta A}{B}\sum_n e^{-\beta(nd+\phi)^2}\right\}\right]. \qquad \ldots\ldots(40)$$

For figure 4*a*, $\phi=\frac{1}{2}d$, and, neglecting the repulsions between all except nearest neighbours,

$$W_a = \frac{B}{\beta}\left[1+\log\frac{2\beta A}{B}-\tfrac{1}{4}\beta d^2\right].$$

Similarly

$$W_b = \frac{B}{\beta}\left[1+\log\frac{\beta A}{B}\right].$$

The energy difference is

$$W_b - W_a = \frac{B}{4\beta}[\beta d^2 - 4\log 2]. \qquad \ldots\ldots(41)$$

Near the position of stable equilibrium (40) may be written approximately

$$W = \frac{B}{\beta}\left[1+\log\frac{\beta A}{B}+\log\left\{e^{-\beta(d-\phi)^2}+e^{-\beta\phi^2}\right\}\right].$$

This gives

$$\frac{dW}{d\phi} = 2B\frac{(d-\phi)e^{-\beta(d-\phi)^2}-\phi e^{-\beta\phi^2}}{e^{-\beta(d-\phi)^2}+e^{-\beta\phi^2}},$$

which vanishes for $\phi=\frac{1}{2}d$, and when $\phi=\frac{1}{2}d$,

$$\frac{d^2W}{d\phi^2} = B(\beta d^2-2). \qquad \ldots\ldots(42)$$

For a sinusoidal law of force of the form

$$W = P + Q\cos 2\pi\phi/d$$

the relations corresponding to (41) and (42) are

$$W_b - W_a = 2Q \qquad \ldots\ldots(43)$$

$$\frac{d^2W}{d\phi^2} = \frac{4\pi^2 Q}{d^2}. \qquad \ldots\ldots(44)$$

If now Q is determined by a comparison of (42) and (44), which is the method used in § 2, its value is found to be

$$Q = Bd^2(\beta d^2-2)/4\pi^2,$$

and the energy of each atom in the dislocated plane exceeds that of a normal atom by the amount given by (43), namely,

$$W_b - W_a = Bd^2(\beta d^2-2)/2\pi^2. \qquad \ldots\ldots(45)$$

This value (45) exceeds the true value (41) by a factor

$$\frac{2\beta d^2}{\pi^2}\cdot\frac{\beta d^2-2}{\beta d^2-4\log 2}. \qquad \ldots\ldots(46)$$

For very hard ions $\beta d^2 \gg 1$ and the factor (46) is large. The value of (46) for copper may be estimated from the values of dW/dr and d^2W/dr^2 given by Fuchs (1935). Here W is the repulsive energy, which in this calculation is assumed to be given by $W=Ae^{-\beta r^2}$. It follows that

$$\beta r^2 = \tfrac{1}{2} - r\frac{d^2W}{dr^2}\Big/2\frac{dW}{dr},$$

and Fuch's numerical values lead to $\beta r^2 = 20{\cdot}3$ at the equilibrium distance $r=d$. The value of the factor (46) is then 4·25. The sinusoidal law (1) therefore over-estimates the energy of a surface of misfit by a factor of less than 4·25. The corresponding errors in estimating the size and energy of a dislocation are at most factors of about 2.

It seems unlikely that the purely mathematical approximations should greatly influence the result. The most dangerous assumption seems to be that of § 6, which is that the displacements of the individual atoms are given exactly by (12) for all positions of the dislocation in the lattice. A more detailed investigation might show that the second approximations for the displacements of the atoms in the extreme positions of the dislocation in the lattice (corresponding to $\alpha=0$ and $\alpha=\frac{1}{4}$ in (31)) lead to differences in the energies of these two positions which cannot be neglected in comparison with the very small difference calculated by using (12) in each case. It is difficult to see how to obtain such a second

approximation, or to decide on general grounds whether the reduction in energy corresponding to the second approximation would be greater for the stable position ($\alpha=0$) or the unstable position ($\alpha=\frac{1}{4}$).

ACKNOWLEDGMENTS

The writer's thanks are due to Professor Peierls for an explanation of the methods used in deriving the results previously published, and for permission to quote sections of his paper. He is also indebted to Professor Mott for valuable discussions, and to Dr. E. H. Linfoot for pointing out some of the questions of convergence involved in the derivation of equation (10).

APPENDIX

THE CONTRIBUTION OF ANISOTROPY TO THE SHEAR MODULUS IN THE SLIP DIRECTION

Consider the stress system which, referred to the principal axes of a cubic crystal, is represented by

$$\begin{bmatrix} 2 & 0 & 1 \\ 0 & -2 & -1 \\ 1 & -1 & 0 \end{bmatrix} \times \frac{S}{6^{\frac{1}{2}}}. \qquad \text{.....(A1)}$$

This is easily shown to represent a shearing stress S across the plane (111) in the direction $(1\bar{1}0)$.

The corresponding strain in a material of cubic symmetry is

$$\begin{bmatrix} 2(s_{11}-s_{12}) & 0 & 2s_{44} \\ 0 & -2(s_{11}-s_{12}) & -2s_{44} \\ 2s_{44} & -2s_{44} & 0 \end{bmatrix} \times \frac{S}{6^{\frac{1}{2}}}. \qquad \text{.....(A2)}$$

The component of shear strain in the direction corresponding to the stress is

$$2Ss_{44}+\tfrac{2}{3}S(s_{11}-s_{12}-2s_{44}),$$

and the angle of shear is twice this.

REFERENCES

Burgers, J. M., 1940. *Proc. Phys. Soc.*, **52**, 23.
Dehlinger, V., 1929. *Ann. Phys., Lpz.*, **2**, 749.
Fuchs, K., 1935. *Proc. Roy. Soc.*, A, **153**, 622.
Koehler, J. S., 1941. *Phys. Rev.*, **60**, 397 (equation 18).
Love, A. E. H., 1944. *Elasticity* (Cambridge : The University Press) (§ 144).
Peierls, R., 1940. *Proc. Phys. Soc.*, **52**, 34.
Taylor, G. I., 1934. *Proc. Roy. Soc.*, A, **145**, 362.
Titchmarsh, E.C., 1937. *Fourier Integrals* (Oxford : The Clarendon Press), Chap. V.