

https://dspace.org/

Using 'SATURN' to determine the effect of data on model accuracy and operation efficiency on a network of a small CBD

Aron, Julian

2014-10-15
http://hdl.handle.net/10539/15739

Downloaded from a DSpace repository. https://dspace.org/

USING 'SATURN' TO DETERMINE THE EFFECT OF DATA ON MODEL ACCURACY AND OPERATIONAL EFFICIENCY ON A NETWORK OF A SMALL CBD

Julian Aron

A project report submitted to the Faculty of Engineering, University of the Witwatersrand, Johannesburg, in partial fulfilment of the requirements for the degree of Master of Science in Engineering.

Johannesburg, 1989

DECLARATION

I declare that this project is my own, unaided work. It is being submitted for the Degree of Master of Science in Engineering in the University of the Witwatersrand, Johannesburg. It has not been submitted before for any degree or examination in any other University.



(Signature of candidate)

16th day of October 1989

ABSTRACT

The classic approach to the construction of a mathematical model to simulate traffic movements in a dense road network, such as a Central Business District (CBD), includes the need to prepare a complete Origin - Destination (O-D) matrix of vehicle trips into and through the network. Subsequent steps in the model deal with the coding of the road network and the assignment of the O-D matrix onto the network.

The acquisition of reliable origin - destination data to create the O-D matrix is very often a tedious and costly exercise. The use of traffic count information as an alternative method of O-D data creation needs consideration.

Using the Simulation and Assignment of Traffic in Urban Road Network (SATURN) suite of computer programs, the task of simulating the prevailing traffic conditions may be considerably facilitated and hence reducing the cost of a traffic study in a CBD area.

The present project report deals with that particular issue in the context of a small CBD in South Africa. The results show that saving can be achieved in the data collection.

ACKNOWLEDGEMENTS

I would like to express my thanks to Dr. R. Del Mistro for his guidance throughout the preparation of this project report.

Special thanks are due to the *firm* Scott & De Waal Inc. for their support and assistance that facilitated the investigation presented in this document.

Last but not least, thanks to my wife Colette and to my son Jérôme for their patience and support during the past year

CONTENTS

		Page
DECLARATION		ii
ABSTRACT		iii
ACKNOWLEDGEMENTS		iv
CONTENTS		v
LIST OF FIGURES		ix
LIST OF TABLES		xii
1	INTRODUCTION	1
1.1	The Rationale for the study	2
1.2	The Methodology	2
2	LITERATURE REVIEW	5
2.1	Introduction	5
2.2	Traffic and Transportation Modelling - general review	5
2.3	Traffic Models for Urban environment	8
2.3.1	TRANSYT - a traffic optimisation technique	9
2.3.2	CONTRAM - an assignment model	11
2.3.3	MULATM - an assignment model	13
2.4	The quest for Origin - Destination Matrices	14
2.4.1	Entropy Maximisation and Information Minimisation	15
2.5	SATURN - a sophisticated assignment model	18
2.5.1	The Simulation and Assignment loop	19
2.5.2	Matrix manipulation using TRADVV programs	20
2.5.3	SATURN Analysis programs	21
2.5.4	Estimation of Origin - Destination Matrices	22
2.5.5	How Queues and Delays are dealt with in SATURN	25
2.5.6	Efficiency and Performance Indices in SATURN	27
2.5.7	Statistical Tests incorporated in SATURN	28

CONTENTS (cont.)

		Page
2.6	Conclusion	30
3	DATA COLLECTION AND NETWORK CODING	32
3.1	Introduction	32
3.2	The Study Area - Randburg CBD	33
3.3	The Origin - Destination survey	35
3.3.1	The method of analysis of the surveyed data	35
3.4	Traffic movements counts	36
3.5	Coding of the road network and the observed matrix	37
3.6	Conclusions	41
4	ANALYSIS USING 'SATURN'	43
4.1	Introduction	43
4.2	The 'Small Network'	45
4.2.1	Run 1 - using the Observed O-D Matrix	45
4.2.2	Run 2 - using the Furness computed Matrix from Trip Ends only, without Prior Matrix	47
4.2.3	Run 3 - using the ME2 computed matrix based on the Observed Prior Matrix	49
4.2.4	Run 4 - using the ME2 computed matrix without Prior Matrix, based on link volumes	52
4.2.5	Discussion	54
4.3	The 'Large Network'	58
4.3.1	Run 5 - using the Furness computed matrix based on available parking bays, without Prior Matrix	60
4.3.2	Run 6 - using the ME2 computed matrix without Prior Matrix, based on 100% link volumes	66

CONTENTS (cont.)

		Page
4.3.3	Run 7 - using the ME2 computed matrix without Prior Matrix, based on 86% link volumes	68
4.3.4	Run 8 - using the ME2 computed matrix without Prior Matrix, based on 57% link volumes	70
4.3.5	Run 9 - using the ME2 computed matrix without Prior Matrix, based on 29% link volumes	72
4.3.6	Discussion	74
4.4	The 'Small Network' versus the 'Large Network'	80
5	CONCLUSION AND RECOMMENDATIONS	83
5.1	Summary and Conclusions	83
5.2	Recommendations	90
5.3	Suggested Future Research	91
REFERENCES		93
APPENDIX A	Specimen of O-D survey data collection	97
APPENDIX B	Origin - Destination survey area and stations	99
APPENDIX C	Assigned traffic volumes plots - Small Network	101
APPENDIX D	Flow Charts - Small Network	106
APPENDIX E	Assigned traffic volumes plots - Large Network	110
APPENDIX F	Flow Charts - Large Network	116
APPENDIX G	Specimen of Batch file for Run No.3	119

CONTENTS (cont.) Page

APPENDIX H Specimen of the Small Network coding data file and of the Observed Matrix data file 121

APPENDIX I Specimen of SATASS and SATSIM output file for Run No.1 130

APPENDIX J Specimen of SATME2 output file for Run No.4 154

APPENDIX K GEH Test - GWBASIC Program 176

APPENDIX L Summary of the Frank - Wolfe algorithm 178

APPENDIX M Index of junction shapes used in SATURN plots 182

APPENDIX N Traffic count movements at junctions 184

LIST OF FIGURES

Figure		Page
2.1	The simulation and assignment phases of SATURN	19
2.2	Estimating a trip matrix	23
2.3	The four basic cyclical profiles (CFPs) for the turning movement from link i to link j	25
3.1	Locality Plan - Randburg CBD and O-D study area	34
3.2	'Internal' zone and 'External' zone coding in SATURN	39
4.1	The 'Small' and the 'Large' networks	44
4.2	Comparison between observed and estimated traffic flows - Run No.1	46
4.3	Comparison between observed and estimated traffic flows - Run No.2	48
4.4	Comparison between observed and estimated traffic flows - Run No.3	51
4.5	Comparison between observed and estimated traffic flows - Run No.4	53
4.6	Comparison of GEH values for the four runs	56
4.7	Comparison of the distribution of differences (absolute values) - Observed vs Estimated volumes	56

LIST OF FIGURES (Cont.) Page

Figure

4.8	Comparison of Time components as a measure of Performance Index	58
4.9	The 'Large Network'	59
4.10	Comparison between observed and estimated traffic flows - Run No.5	64
4.11	Comparison between observed and estimated traffic flows - Run No.6	67
4.12	Comparison between observed and estimated traffic flows - Run No.7	69
4.13	Comparison between observed and estimated traffic flows - Run No.8	71
4.14	Comparison between observed and estimated traffic flows - Run No.9	73
4.15	Comparison of GEH values for the five runs	75
4.16	Comparison of the distribution of differences (absolute values) - Observed vs Estimated volumes	76
4.17	GEH values in relation to percentage link counts	76
4.18	Comparison of Time components as a measure of Performance Index	80
B1	Origin - Destination survey area and stations	100

LIST OF FIGURES (Cont.) Page

Figure

C1	Run No.1 - Assigned traffic volumes	102
C2	Run No.2 - Assigned traffic volumes	103
C3	Run No.3 - Assigned traffic volumes	104
C4	Run No.4 - Assigned traffic volumes	105
D1	Run No.1 - Flow chart diagram	107
D2	Run No.2 - Flow chart diagram	107
D3	Run No.3 - Flow chart diagram for SATME2 matrix computation	108
D4	Run No.4 - Flow chart diagram for SATME2 matrix computation	109
E1	Run No.5 - Assigned traffic volumes	111
E2	Run No.6 - Assigned traffic volumes	112
E3	Run No.7 - Assigned traffic volumes	113
E4	Run No.8 - Assigned traffic volumes	114
E5	Run No.9 - Assigned traffic volumes	115
F1	Run No.5 - Flow chart diagram	117
F2	Run No.6 - Flow chart diagram for SATME2 matrix computation	118
N1	Traffic count movements at junctions	185

LIST OF TABLES

Table		Page
4.1	Summary of Distribution of differences between Observed and Assigned traffic volumes - Run 1	46
4.2	Operational efficiency and performance indices for the simulation one PM peak hour - Run 1	47
4.3	Summary of Distribution of differences between Observed and Assigned traffic volumes - Run 2	49
4.4	Operational efficiency and performance indices for the simulation one PM peak hour - Run 2	49
4.5	Summary of Distribution of differences between Observed and Assigned traffic volumes - Run 3	51
4.6	Operational efficiency and performance indices for the simulation one PM peak hour - Run 3	52
4.7	Summary of Distribution of differences between Observed and Assigned traffic volumes - Run 4	54
4.8	Operational efficiency and performance indices for the simulation one PM peak hour - Run 4	54
4.9	A comparison between the observed matrix used in Run 1 and the matrices used in runs 2, 3, and 4	57
4.10	Summary of the Trip Ends employed in Run No.5	62

LIST OF TABLES (Cont.)

Table		Page
4.11	Summary of Distribution of differences between Observed and Assigned traffic volumes - Run 5	65
4.12	Operational efficiency and performance indices for the simulation one PM peak hour - Run 5	65
4.13	Summary of Distribution of differences between Observed and Assigned traffic volumes - Run 6	67
4.14	Operational efficiency and performance indices for the simulation one PM peak hour - Run 6	68
4.15	Summary of Distribution of differences between Observed and Assigned traffic volumes - Run 7	69
4.16	Operational efficiency and performance indices for the simulation one PM peak hour - Run 7	70
4.17	Summary of Distribution of differences between Observed and Assigned traffic volumes - Run 8	71
4.18	Operational efficiency and performance indices for the simulation one PM peak hour - Run 8	72
4.19	Summary of Distribution of differences between Observed and Assigned traffic volumes - Run 9	73

LIST OF TABLES (Cont.) Page

Table

4.20 Operational efficiency and performance indices for the simulation one PM peak hour - Run 9 73

4.21 A comparison between the observed matrix used in Run 6 and the matrices used in runs 5, 6, 8 and 9 78

4.22 Comparison of data availability for the two network 80

4.23 Comparison of quality of data input and quality of results for the two networks 82

5.1 Summary of runs 1 - 4 ('Small Network') 84

5.2 Summary of runs 5 - 9 ('Large Network') 85

5.3 Operational Efficiency Indices - runs 1 - 4 ('Small Network') 86

5.4 Operational Efficiency Indices - runs 5 - 9 ('Large Network') 86

5.5 Input quality versus Output quality 88

CHAPTER 1 INTRODUCTION

Modelling of existing traffic patterns in view of assessing the necessity of constructing new road facilities has been used to a certain extent in the past two to three decades.

Hand in hand with the computer technology advancements, traffic and transportation models have become more sophisticated and require less computer 'power'. In the 1970s, various traffic models have been developed and run on main frame computers. In the 1980s, however, there is a shift from the main frame to the PC and developers of transportation programs readapt the old versions to become PC compatible.

Earlier models seem to be more applicable to the rural and suburban environment. Yet, transportation engineers use these tools up to date in order to assess traffic patterns also in urban areas.

In the past decade a variety of traffic models have been developed in the United Kingdom, the U.S.A. and Australia that can be applied to a dense network of roads in an urban area. These models take into account, for example, route choice through a road network and detail modelling of signalised intersections.

In this project report, the focus is on SATURN, a model developed in the U.K. at the University of Leeds and its applications to a network of roads in a small CBD in South Africa. The study tests the effect of the data input, i.e. O-D matrices and traffic counts, and shows to which extent these resources can be reduced and still achieve fair results.

25×IC

From the information available at this point in time, it is not known about the application of this model in the RSA (apart from the use for academic purposes).

1.1 The Rationale for the study

From the investigation into the literature by Mr. D.Ingham (and separately by myself), in view of acquiring an urban traffic model for the firm Scott & De Waal, the SATURN model came the highest in ranking amongst the compared models. To date Scott & De Waal has not acquired the model and the use is limited to academic purposes only.

In addition to that, I have been involved on a full time employment basis, to lead a traffic study in the Randburg CBD area. The goal of this study was to explicitly model the traffic patterns in the inner core CBD and to derive origin - destinations movements and traffic and pedestrians flows. These results are supposed to help the town planners to review the whole Randburg CBD and its Mall.

Therefore, the use of the SATURN model seemed to be a good choice for that purpose, particularly because this program has not been validated before, to the best of my knowledge, in the RSA, in a small CBD.

1.2 The Methodology

A review of transportation and traffic engineering models is presented in the project report, in regards to urban areas models. Special consideration is given to the description of the SATURN model.

Then, the data collection phase is presented in Chapter 3 and reference to the derivation of a PM peak hour observed O-D matrix is given. The particularities of the road network coding in the SATURN format are presented as well.

The analysis, given in Chapter 4, tests the amount of input data to the model in two phases:

(1) Four runs have been undertaken within the context of the original O-D surveyed area, referred to as the 'Small Network'.

In the first run the original O-D matrix is used as the traffic demand for the analysed period of time.

In the second run a matrix derived from the observed trips ends, using the Furness method, has been employed.

In the third run the O-D matrix has been derived by using the Matrix Estimation subprogram SATME2, given the observed matrix and the observed traffic counts.

In the fourth run the Matrix Estimation subprogram SATME2 has been used without the observed ('prior') matrix. The matrix has been estimated from traffic counts.

(2) Five additional runs have been undertaken within the context of a slightly extended network, referred to as the 'Large Network'. Although this network includes in addition to the 'Small Network' only the peripheral signalised intersections, no prior O-D matrix for the extended area was available. Therefore, other solutions have been tested in these five runs, all of which assume

that no prior knowledge about the trip ends at the interior of the study area zones (parkings) is available. Only cordon stations counts, as well as turning volumes at street intersections and the number of parking bays at the internal zones are assumed to be known.

Thus the fifth run employs an O-D matrix derived by the Furness Method on the basis of trip ends. These trip ends are computed on the basis of cordon station traffic counts and on the basis of the number of parking bays at each of the internal zones.

In the sixth run, as well as in the following three runs, the subprogram SATME2 has been used to compute O-D matrices on the basis of traffic counts. Cordon intersections' traffic movements have been made available throughout the five runs. However, the number of available counts internal to the study area, has been reduced and the effect quantified. Since trip ends at internal zones are not assumed to be known, it implies that 'in' and 'out' volumes at the parking zones are not known as well.

Operational efficiency indices, such as the total delayed time, the total queued time, the average speed or the total fuel consumption are measures of performance. These indicators are given for each of the runs as performance indices for comparison purposes. In addition, a variety of statistical measures to indicate the 'goodness of fit' between the observed and the estimated traffic flows are given.

Conclusions and recommendations are given in Chapter 5.

CHAPTER 2 LITERATURE REVIEW

2.1 Introduction

Various authorities involved with decision making as regards the planning and the implementation of road construction and traffic management, need criteria according to which they would be able to make the right decisions at the right time. Be it on a country wide basis (DOT), on a Provincial level or on a local authority level, planning and construction of roads has to be undertaken.

Traffic and transportation models have been developed to evaluate the existing patterns and to be able to make prediction for future scenarios.

This chapter reviews some of the models and refers to their validation in the context of overseas and South African experience. Special consideration is given to urban environment traffic modelling and in particular the use of the SATURN model.

2.2 Traffic and Transportation Modelling - general review

Traffic models have been developed as algorithms to simulate existing traffic patterns. A variety of models have been developed for specific applications. Yet, what characterises them all, is the fact that they provide a useful tool to engineers and transport planners to forecast and implement schemes ranging from traffic management projects to construction of road facilities.

Mathematical algorithms that attempt to simulate traffic movements have been developed as early as in the 1950s, such as the 'shortest path through a maze' developed by Moore, E.F. or Wardrop's equilibrium principles. However, not until computer facilities have matured in the the 1960s and mostly in the 1970s, that programs could be used to solve tedious and numerous iterations involved in the modelling process.

Traffic and transportation models may be designed for specific applications, for examples considering various land-use activities. However, they can be broadly classified as being either applicable to large scale rural and suburban areas or being applicable to an urban high road density area.

Four traditional transportation planning steps include: trip generations, trip distribution, modal split and traffic assignment. All models use a demand Origin - Destination (O-D) matrix to be assigned to the particular road network.

Models that belong to the first group differ from those in the second one mainly in regards to the assignment phase.

In models applicable to rural and suburban areas, the traffic flows assigned to the road network depends primarily on speed-flow relationships on the network links. That is because the longest delays to vehicles occur while travelling on a particular road. However, the assignment of traffic to a dense urban road network depends on delays occurring at intersections rather than on relatively short distance links.

In South Africa, traffic and transportation models have been obtained mainly from sources in the United Kingdom and in the United States of America.

25×IC

They have been used without modifications to the local scene. Impetus to transportation modelling in South Africa, has been given with the initiation of the PWV Transportation Study in 1975. To this end, the PLANPAC model, known in its updated version as the UTPS model, has been acquired from the U.S. Federal Highway Administration. This model is to date the basis of the PWV Transportation Study.

From the U.K., the MINITRAMP model (see Wootton Jeffreys et al.) has been acquired, and is still used in various transportation and traffic projects in South Africa, such as the Johannesburg Metropolitan (JOMET) Transportation Study.

The models described above, are two examples of 'Gravity' type models that may be applicable to rural and suburban environments. Trips are distributed between origins and destinations according to a 'Gravity' algorithm, based on time, length or other cost measure, (see formula (2.1) below).

$$Tij = a_i \cdot Gi \cdot b_j \cdot Aj \cdot F(Cij) \qquad (2.1)$$

where, Tij is the estimated trips between origin i and destination j

Gi is the total number of trips generated at zone i

Aj is the total number of trips attracted at zone j

F(Cij) is a function of the generalised cost from i to j

a and b are constants associated with generations and attractions

Assignment on the links depends primarily on time and speed-flow relationships and little importance is given to delays at junctions.

Two most popular assignment techniques associated with these models are 'All-Or-Nothing' (AON) and 'Capacity Restraint'. The AON technique assumes that vehicles will assign to the shortest (or less costly) paths, between origins and destinations, while all other paths are not assigned any flows. No consideration is given in this type of assignment to congestion and road capacity. The link travel time is assumed to be fixed (not flow dependant), Sheffi (1985).

The 'Capacity Restraint' technique takes into consideration the capacity of links provided to the model in terms of speed-flow relationships. A repetitive AON assignment is undertaken by the model, in which travel times computed in the previous iteration are used in the current iteration.

The AON assignment technique is a 'one time' assignment whereas the 'Capacity Restraint' assignment depends on the specified number of iterations. Neither of the two techniques can provide a solution to properly model a traffic pattern on a network. Nevertheless, both are useful techniques that may be applied to large scale networks.

Better techniques have been developed to model traffic flows on road networks that are mostly applicable to dense urban networks.

2.3 Traffic Models for Urban Environment

In dense road networks, such as in Central Business Districts (CBD), the importance given to the degree of detail in the analysis of traffic flows, is high. Naturally, congestion, delays at intersections and the formation of queues, influence the traffic pattern and should be considered in the modelling process.

Traffic models for urban areas are mostly employed to test and predict the influence of traffic management schemes, for example, the closure of a street to traffic or the introduction of a contra-flow bus lane.

Models applicable to urban areas may be subdivided into three groups. The one group includes models that can be defined as 'Simulation' techniques. The second group comprises models that may be defined as 'Optimisation' techniques, while the third group includes 'Assignment' models.

'Simulation' models, such as TRAFFICQ described by Logie (1979) simulate in much detail the operation of signalised intersections, vehicle arrival patterns, queues and delays at junctions and vehicle-pedestrian conflicts. However, these models are normally used for small networks, say up to 10 intersections, or merely to analyse an isolated signalised intersection.

A simulation type model cannot calculate route choice through a network and is not capable of optimising the traffic signals cycle time and splits. The user must therefore provide the assigned volumes on links, as well as traffic signals cycle times. It is assumed that the assignment is fairly easy to obtain for a simple network. Alternatively, if the analysed area is part of a larger area, link volumes should be obtained on the basis of a conventional transportation model involving assignment techniques.

2.3.1 TRANSYT - a traffic optimisation technique

TRANSYT is an off-line computer program, whose primary aim is to find the 'best' fixed time plan for the coordination of traffic

signals in a study area where most of the intersections are signal controlled.

The early version of the model has been described by Robertson (1969). It has been first applied in 1967 to eight signalised intersections in London and could only be applied to traffic signal controlled junctions. In later versions, give-way priority junctions may also be included.

Similar to the 'simulation' models, TRANSYT cannot find a route-choice through a network. Thus, traffic volumes on links and turning movements at intersections must be provided to the model by the user.

The most important characteristic of this traffic model, is the algorithm according to which flows on links and at junctions are modelled. A platoon dispersion formula is applied to the departing traffic upstream in order to calculate the arrival pattern at the downstream intersection. The cycle time, assumed to be the same for all intersections (double or half cycle times are also permitted), is subdivided into equal steps (time intervals). Thus the program builds 'cyclic flow profiles' (cfp), the flow of traffic past a certain point as a function of time. The model calculates delays, number of stops, turning movements and queues on the basis of average flow rates in each time interval.

These values expressed in monetary terms yield a computed 'Performance Index' (PI) that is the total costs for the whole network. The lower the PI, the better the coordination between the signals. An optimum cycle time may be sought by the program so that to minimise the PI.

The most updated version, TRANSYT 9, utilises the latest PC facilities (Chard et al.,1987). Interactive input and visual results presented on the screen have been incorporated in this version.

2.3.2 CONTRAM - an Assignment model

Assignment models differ from 'simulation' and 'optimisation' model mainly in regard to the route choice option of vehicle assignments on to a network. An origin-destination trip matrix representing the demand for the analysed period of time, is thus assigned to the network. Congestion is taken into account and vehicles are assigned usually through an iterative process to the network so that to reach an 'equilibrium' state of affairs. When equilibrium is reached, it is said that no driver can improve his travel time (generalised cost) by diverting to other routes. This is defined as 'User Equilibrium' based on Wardrop's first principle. The popularity of this type of models has also been perceived in the U.S.A. (Abu-Eisheh et al.,1986). Recommendations were given for small-to-medium sized urban areas in the U.S.A. to employ that method.

CONTRAM is an example of an 'assignment' model. It has been developed at the TRRL in the U.K. (Leonard et al.,1978 and Leonard et al.,1982), able to run on a main frame.

The main feature that chracterises CONTRAM is the algorithm according to which vehicles are assigned to the network. The user defines 'packets' of vehicles to be assigned to the network. The size of a packet can be as little as one single vehicle. Each Tij cell is divided into packets of vehicles and each packet of vehicles is assigned to its minimum journey time route through

the network, taking into account delays and queues at intersections. The smaller the packet size the higher the computer time. The program is capable of optimising cycle times and splits at signalised intersections or alternatively using a user defined cycle time.

The model has since its inception been adapted to a PC environment. However, two important features have not been incorporated in the program (at the time this project report has been conceived): the one is a plotting facility and the second is the capability of updating O-D matrices from traffic counts (see detailed discussion on this subject in Section 2.4.1). Since then, additional features have been added to version 5 of the model (Traffic Eng. & Control, Dec. 1988, pp. 643 -645). One of these new features introduced is the subprogram COMEST that estimates O-D matrices from counts. However, that was not previously the case and users of the model had to manually adapt the O-D matrix after each run to calibrate the model. A fairly good indication as regards the matrix was an important prerequisit to limit the number of iterations.

Davidson (1986), used a traditional O-D survey prior to using CONTRAM in Edinburgh. Black et al.(1986) used a program called MICROMATCH, in order to first match the surveyed data obtained from a number plate registration survey, before using the CONTRAM model. Stephenson et al. (1984) used CONTRAM to verify the program to changes in the network in Edmonton CBD (Canada). They show how in effect the model by itself can help derive the most appropriate O-D matrix by manually adjusting the matrix after each iteration.

2.3.3 MULATM - an Assignment model

MULATM is an example of another assignment model, developed in Australia at Monash University in Melbourne (Taylor, 1987).

This model is a PC version of a previous version called LATM that ran on a main frame computer. As one of the new generation of models for local area traffic management in urban environments, it incorporates a 'stochastic user equilibrium' technique. This technique differs from the 'user equilibrium' one in regard to the route choice drivers have to make through a dense network. The 'user equilibrium' is a deterministic approach where all drivers are assumed to know the quickest route through the network and they choose their route so that to minimise their travel time. The 'stochastic user equilibrium' assumes that drivers have different individual perceptions of the minimum route and their knowledge of the network conditions is imperfect.

The model is based on Dial's algorithm in respect to the behavioural path choice procedure. However, Dial's method cannot account for congestion. Therefore, Taylor combined the 'user equilibrium' (Frank - Wolfe algorithm) component with the stochastic technique. The result is a stochastic method based on individual minimisation of perceived travel time/cost, which accounts for congestion effects (also see Appendix L).

The program is interactive in respect to input and screen output information, i.e. the user may visually see the effect of the assignment on the screen. Changes can be made to test various options and the results immediately seen on the screen. The model makes extensive use of the colour screen capabilities.

Although the model requires an O-D matrix in the assignment procedure, the subprogram SUPE can provide some kind of information about local traffic conditions on the basis of traffic counts.

2.4 The quest for Origin -Destination Matrices

Although transportation and traffic models simplify reality, the issue of replicating observed flows cannot be avoided. Any model culminates with the assignment phase, which is supposed to yield estimated flows as close as possible to the observed ones.

The road network considered in the modelling of a large area (e.g. region, city) is generally dispersed. Road users are normally given few or no choice at all in respect to the roads they may use. Congestion on rural and suburban roads is not a predominant feature as it is the case in the urban environment.

When the purpose of the study is to model an urban dense network of roads the situation is different. In this case the area to be assessed (such as a CBD) is relatively small (say, 1 Km^2), the road network dense where congestion occurs and drivers are faced with multiple route choice through the road system.

The 'external' zones on the cordon that encompasses the study area are located at the points where the cordon cuts the roads leading into the study area (as it is the case in a large area being modelled). However, where the road network is dense the 'external' zones are at close proximity. Thus before even penetrating into the study area, road users often have more than one choice to approach the inner core, i.e. they may choose which 'external' zone to use. Once in the study area, the user faces a route choice to gain access to his destination. (The same scenario applies in reverse where drivers attempt to exit the inner core area in the direction of the external zones).

Traditionally, an O-D matrix may be derived, for example, by means of surveying and matching observed vehicle registration numbers at the cordon stations and at internal zones, such as office blocks or shopping centres parkings. Alternatively road side interviews may be undertaken or use aerial photography.

Since such methods are costly, laborious and not necessarily accurate, scientists have resorted to less costly methods, i.e. to derive origin-destination matrices from observed traffic counts.

Willumsen (1981), described various transportation models based o O-Ds estimated from traffic counts. He identified two main groups of models. The one applies a 'gravity' approach to the problem, i.e. origin, destination and separation costs factors determine the trip making behaviour. The second group involves a more sophisticated approach related to proportional assignment conditions from an entropy maximising approach, i.e. cost constraints are replaced by constraints associated to traffic counts. The latter is applicable to modelling of traffic in urban areas.

2.4.1 Entropy Maximisation and Information Minimisation

The main problem in estimating a trip matrix from traffic counts is to identify the proportion of trips between origin zone i and destination zone j that uses a link (turn) 'a' and in particular a link for which traffic counts are available (in SATURN it is referred to as PIJA factors).

It is therefore possible to express the flow on each link in the formula (2.2), as follows:

$$Va = \sum_{ij} Tij * \hat{Pij} \qquad (2.2)$$

where, Va = traffic on link/turn 'a'
Tij = trip element in the matrix (value that we seek)
Pij = proportion of trips between origin i and destination j that use link a (route choice parameter)

Thus, $\hat{Pij} = 1$ for all assigned links 'a' (and 0 otherwise) in the case of an 'All-or-Nothing' assignment. For equilibrium assignments $\hat{Pij} <= 1$.

In a study area with N origins and N destinations, the number of Tij unknown elements in the matrix is N^2-N (disregarding intra-zonal trips). This number is usually larger than the number of independent counts on links and thus the equation (2.2) cannot be solved to yield a unique answer (equation underspecified that may result in more than one matrix so that when it is assigned it produces the observed counts).

Both the 'Entropy Maximisation' (EM) technique and the 'Information Minimisation' (IM) technique try to solve this problem by deriving the most likely matrix, from a series of optional solutions, to be consistent with the observed counts on links.

Entropy Maximisation

The 'Entropy Maximisation' technique is based on the work initiated by Wilson, A.G. in 1970 (Willumsen, 1981 and Hall et al., 1983). The problem can be stated as follows:

$$\text{Max } S(Tij) = -\sum_{ij} (Tij * \log_e Tij - Tij) \qquad (2.3)$$

subject to

$$Va - \sum_{ij} Tij * \overset{a}{Pij} = 0 \quad \text{and} \quad Tij >= 0 \qquad (2.4)$$

for all counted links 'a'.

The solution may be given as follows:

$$Tij = \prod_a * X_a^{\overset{a}{Pij}} \quad \text{(product over all links)} \qquad (2.5)$$

where,

X_a = factors associated with each link, related to Lagragian multipliers (X on link 'a' equals e exp(-lambda), which is the equivalent balancing factor to links, as it is in the Furness method for trip ends.

Van Zuylen et al.(1980) extended the solution given in equation (2.5) to take into account a prior matrix. Thus the solution becomes

$$Tij = tij * \prod_a * X_a^{\overset{a}{Pij}} \quad \text{(product over all links)} \qquad (2.6)$$

where, tij represents an old or a prior matrix.

The solution given in (2.6) is presently used in SATURN in the matrix updating program SATME2.

Information Minimisation

The 'Information Minimisation' technique is very similar to the 'Entropy Maximisation'. The solution to the IM technique is given in the formula (2.7).

$$Tij = tij * \prod_a * X_a^{(\overset{a}{Pij} / \sum_a \overset{a}{Pij})} \qquad (2.7)$$

The IM formula has also been suggested by Van Zuylen in 1978 (Willumsen, 1981).

2.5 SATURN - a sophisticated assignment model

SATURN (Bolland et al. 1979, Hall et al. 1980, Van Vliet 1982 and Van Vliet et al. 1987) is a sophisticated assignment model in that it recognises the linkage between the simulation and the assignment phases in the modelling process (see Section 2.5.1).

The model has been developed at the University of Leeds (U.K) in 1979 for traffic management schemes. Since then it underwent various modifications that improved the capabilities of the model. Yet, the basic assumptions have been kept throughout the versions. The latest version SATURN 7.1 is used in this project report.

The model is applicable to urban dense networks of roads, where junctions are modelled in detail. However, it includes the facility of coding in a 'buffer' area, surrounding the detailed simulated area, where the network is coded on a conventional link-based level. This facilitates the incorporation of traffic flows that influence the detailed study area. In this project report only the detailed study area has been considered (also see Section 3.5).

The model comprises a matrix manipulation set of programs, included in the TRADVV suite (see Section 2.5.2) and a matrix estimation routine, SATME2, that updates and estimates matrices with regard to traffic counts (see Section 2.5.4).

SATURN includes three analysis subprograms: (1) SATED - for detail analysis of intersections, (2) SATLOOK - to examine output from the various other programs, (3) P1 - a plotting routine to

produce graphical output display (on screen or on paper) of comprehensive link-based data. The analysis programs may be run interactively from a terminal, although SATLOOK may also be run in a 'batch' mode.

2.5.1 *The Simulation and the Assignment loop*

The basic structure of SATURN incorporates two phases, a simulation and an assignment phase. The simulation phase determines junction delays given a certain pattern of traffic. Flow delay curves derived the simulation phase are passed to the assignment phase, whose role is to determine the minimum time route through the network, given the demand trip matrix. The model uses a 'user equilibrium' technique based on an optimum combination of all-or-nothing assignments. The user may also specify a 'stochastic user equilibrium' technique based on Frank-Wolf iterative algorithm extended by Sheffi's 'Method of Successive Averages' (Sheffi, 1985).

New link flows resulting from the assignment stage determine a new set of simulation junctions delays (see Figure 2.1). This iterative loop is continued until assigned link flows in two successive iterations are within a convergence criteria (e.g. maximum number of iterations).

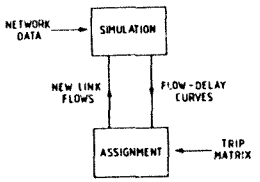

Figure 2.1 The simulation and assignment phases of SATURN (after Hall et al.,1980).

In this project report convergence criteria has been set to a maximum of ten iterations. However, in most of the runs convergence has been achieved after the third iteration (see Appendix I, p.138).

2.5.2 Matrix manipulation using TRADVV programs

TRADVV is a matrix manipulation suite of programs that has been incorporated into SATURN, as mention earlier in this chapter.

It includes six subprograms, M1 to M6. The first subprogram M1 is the most comprehensive among the six. It is capable, inter alia, to build a SATURN compatible matrix from a card reader file, to add or multiply matrices and to convert files between TRADVV and MINITRAMP files.

Subprogram M2 compares two matrices element by element and produces statistical measures.

Subprogram M3 'compresses' a matrix by aggregating several zones into one 'district' (larger zone), much the same as subprogram M5 for smaller matrices.

Subprogram M4 reduces a matrix by retaining only a sub-set of the rows or columns.

Subprogram M6 employs the Furness method of estimating an O-D matrix from trip ends, with or without a prior matrix.

In this project report TRADVV programs M1, M2 and M6 have been used, as discussed in Chapter 4.

2.5.3 SATURN Analysis programs

As mentioned earlier in this chapter, three analysis programs have been incorporated in SATURN, as follows:

(1) SATED (SAturn EDitor)

This program allows the user to interactively edit networks, change data and examine the effect of the change at a certain node by re-simulating the node in isolation. Alternatively, a junction may be coded from the terminal without editing an already existing network.

The program may also be used for educational purposes to experiment the effect of changes, say, in cycle length on queues and delays at an isolated intersection.

Van Vliet incorporated this program in SATURN as a compromised alternative solution to the incompatibility between TRANSYT and SATURN in respect to cycle and split times optimisations.

(2) SATLOOK

This program allows the user to examine output files from SATURN runs, interactively or in a 'batch' mode (i.e. with an input list of commands to execute non-interactively).

The user is faced with a comprehensive menu of options to choose from. It includes, among others, examination of individual simulation and buffer nodes, printing of simulation or assignment outputs and statistics or to compare two files element by element.

(3) P1

P1 is a network plotting program. Link-based information (as opposed to node-based) may be plotted on a graphical terminal or on paper, using a plotter.

The network or a 'window' of a network may be plotted. Other parameters include among others, link capacities, link flows (in figures or band width), volume over capacity ratios (V/C), average delays and queue lengths.

2.5.4 Estimation of Origin - Destination Matrices

As mentioned earlier in this report (Section 2.4), the Entropy Maximisation technique is used in SATURN to derive the most likely trip matrix on the basis of traffic counts and a prior matrix.

The existence of a prior matrix and a high percentage of available traffic counts usually result in a good estimated O-D matrix. However, even in the absence of an observed matrix, a certain matrix has to be made available to the program in order to derive the initial Pija factors. This matrix may be built, for example, by the user to the best of his knowledge regarding the trip distribution. Alternatively, one may use observed trip ends and 'Furness' a matrix to be used in the SATME2 program as the 'original' matrix.

The chart in Figure 2.2 depicts the estimation of trip matrices in SATURN using the program SATME2.

The iterative procedure commences with a full run of SATURN, i.e. simulation (SATSIM) and assignment (SATASS), using an old matrix

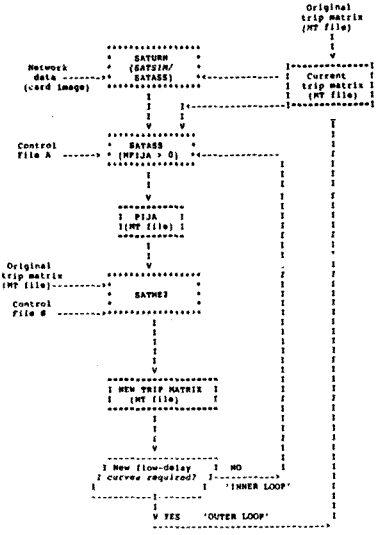

Figure 2.2 Estimating a trip matrix (after Van Vliet et al., 1987)

or any other matrix, as mentioned in the previous paragraph. Then, the assignment program SATASS is invoked using a control file 'A' in order to derive initial Pija factors.

In the control file 'A' the user specifies whether traffic counts should be read from the file itself or from the network data file. In all runs involving SATME2 for the purpose of this project report counts have been specified to be read from the network data file.

The Pija factors file together with the original matrix and a second control file 'B' are input further to the matrix estimation routine SATME2. Control file 'B' contains parameters to run the matrix estimation program, such as, number of iterations, existence of a prior matrix and output file name. In addition the user may specify in this file flow constraints such as trip ends at various zones. In this project report trip ends constraints have been imposed where necessary.

Once the new trip matrix is computed, two alternatives exist; the one involves the 'Inner Loop' process and the other involves the 'Outer Loop' procedure. In the first instance, the newly computed matrix by SATME2 is input directly to the SATASS program in the second iteration to derive better Pija factors. In the second case, the newly derived matrix is used in a 'normal' SATURN run SATASS/SATSL and only after the SATASS program is used to derive new Pija factors. The short procedure is recommended when it is felt that the change in traffic pattern is small and therefore the simulation stage will not affect much final results. In all runs involving this project report the 'Outer Loop' has been employed in order to get more reliable results. The 'Outer Loop' has been run twice since stable results have been obtained (see Chapter 4).

2.5.5 How Queues and Delays are dealt with in SATURN

Queues and delays are two quantitative measures to level of performance of the network (also see section 2.5.6). The shorter the queues at intersections and the shorter the delays to vehicles on links and at intersections, the better the overall performance of the network.

In SATURN, the background to the calculation of these two parameters relies heavily on gap acceptance theories developed at the TRRL for the following models: (1) ARCADY - to model capacities, queues and delays at roundabouts (2) PICADY - to mode the same parameters at give-way junctions and (3) OSCADY - to model isolated signalised intersections.

In the simulation stage, the main building block is the Cyclic Flow Profiles (cpf), defined previously in section 2.3.1. Thus four types of cyclic flow profiles are considered in SATURN; 'in', 'arrive', 'accept' and 'out' (see Figure 2.3).

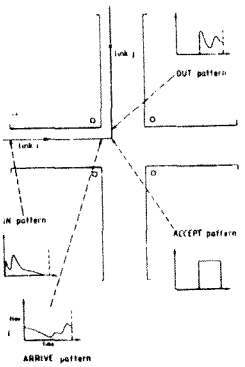

Figure 2.3 The four basic cyclic flow profiles (cfp) for the turning movement from link i to link j.

The model applies a platoon dispersion formula to the upstream 'in' flow profile to derive the 'arrive' flow profile. The formula devised by Robertson in 1979 for the **TRANSYT** model is given below:

$$q(r) = (1 - F)*q(r - 1) + F*Q(r - t) \qquad (2.8)$$

where

- $q(r)$ = downstream flow at time r, corresponding to the 'arrive' cfp.
- $Q(r)$ = upstream flow at time r, corresponding to the 'in' cfp.
- t = minimum journey time upstream to downstream, taken as 0,8 of the average time
- F = a smoothing factor equal to $1/(1 + 0,4*t)$ for the best fit.

The 'in' and the 'arrive' profiles relate to the incoming traffic on link i. The other two profiles, i.e. 'accept' and 'out' depend on the capacity of the turn. When the capacity of the turn is less than the 'arrive' profile, a queue starts to develop. However, when over-capacity develops at junctions, SATURN calculates a 'queue reduction factor' (QRF) in the simulation phase. It is applied in the assignmment stage so that to reduce by a certain proportion the 'demand' flow and assigns the realistic flows to the network. Thus it is possible that a Tij value in a matrix is 1000 trips per hour, but only 900 vehicles can actually reach the destination within the simulation period of time. The QRF equals 0,9 in this particular case.

Queues are dealt with in SATURN according to a probabilistic theory (Van Vliet et al., 1987, SATURN Notes).

The simulation phase models 'flow-delay' curves by calculating delays for each turning movement. A curve is fitted using three calculated points according to the formula (2.9), given below:

$$d(V) = \begin{cases} d0 + a*V^n & V \leq C \\ d(C) + T(V-C)/2C & V > C \end{cases} \qquad (2.9)$$

where

d(V) = the average junction delay experienced by a turning volume V.

C = the turn capacity (equals the integrated 'accept' profile).

d0 = the delay at zero flow

T = duration of the simulated time period

a,n = turn-specific parameters

2.5.6 Efficiency and Performance indices in SATURN

The 'total delayed time' and the 'total queued time' have been discussed as being two performance indices. Together with the 'total free run' time they yield the total travel time (TTT).

The 'total travel distance' and the 'overall average speed' complement the time-speed relationship performance indices.

Another important index of performance is the total fuel consumption. Ferreira (1981) discussed the issue of energy conservation as part of traffic management schemes and derived the parameters used in (2.10) below for the 'average' British car. The 'state- of-art' equation according to which the amount of fuel consumed is calculated as:

$$f = 0{,}07d + 1{,}2t + 0{,}016S1 + 0{,}005S2 \qquad (2.10)$$

where,

f = fuel consumption in litres
d = total travel distance in vehicles-kilometres
t = total delayed (idling) vehicles-hours
S1 = number of primary stops ('full' stops at junctions)
S2 = number of secondary stops (e.g. stop-start)

A summary of performance indices related to the various runs undertaken in this project report is given in Chapter 5. An example of an output file giving these measures is included in Appendix I.

2.5.7 Statistical Tests incorporated in SATURN

A series of important statistical tests is included in the SATURN model. They help the user to evaluate the 'goodness' of fit between the modelled values and the observed values, as input to the program by the user.

The following major statistic indicators are given, for example, in an output file from a SATSIM (simulation) or a SATASS (assignment) run:

- Difference between assigned and observed flows per link (in pcu/hr and in percentages) and their distribution.

- Referring to the observed values as 'SET 1' and to the assigned values as 'SET 2', the program calculates:

  i) The sum of elements, the average element, the standard deviation and the coefficient of variation for each of the two sets and prints the difference between the values computed for 'SET 1' and those for 'SET 2'.

ii) Regression of 'SET 2' elements (Y) against 'SET 1' elements (X). Parameters a and b in the linear regression equation Y = a + bX are given, as well as the standard errors and the R-squared values.

- iii) The distribution of ratios of 'SET 2' to 'SET 1' elements, the mean of relative and absolute differences are calculated.

One important statistical test incorporated in SATURN is the GEH Statistic. This test is an adaptation of the known Chi Square Test to the transportation field. The test has been suggested to Van Vliet by Geoff Havers of the Greater London Council.

The reason for the introduction of this test is the inability of either the relative or the absolute differences between observed and estimated traffic flows to reflect reality over a wide spectrum of volumes. For example, a 50% difference between observed and predicted flows for a volume of 100 vph makes little difference in terms of traffic management. But only a 10% error in 4000 vph might imply the necessity for an additional lane.

The GEH Test attempts to overcome this problem by combining the absolute and the relative difference into one formula given below.

$$GEH = [(V2 - V1)^2 / 0,5(V1 + V2)]^{0,5} \qquad (2.11)$$

The denominator (V1 + V2)/2 is taken as such in order to avoid division by 0 in the case where either the observed or the estimated value equals 0 (which would be the case in the Chi Square Test).

The lower the GEH error statistic value the better the fit between observed and estimated values.

As a rule of thumb, a GEH value of 5 and less indicates a fairly good fit and a GEH value of more than 10 means a bad fit.

This statistical test has been used extensively in this project report since it seems to give a quick response to the results obtained in a certain run, without having to evaluate various statistical test results.

Since the program can only compare observed with estimated values, the various statistical tests described above rely in effect on the number of available observed values input to the program. Therefore, if only few observed counts exist the statistical test may lack some confidence.

As is further discussed in section 4.3, the number of observed counts is gradually reduced (as input to the program) in order to test the amount of data required. However, these observed counts are known. Therefore, in order to take them into consideration for statistical purposes, manual calculations have been used for runs in the context of the 'Large Network' (see Chapter 4) for other than the GEH Test. A small program (see Appendix K) has been written to calculate the GEH values for the runs involving the 'Large Network'.

2.6 Conclusions

In this chapter a literature review of traffic and transportation modelling has been discussed, with reference to traffic models in urban areas and in particular to SATURN.

The most important features of the SATURN model have been presented. Yet, they are by no means a comprehensive description of the SATURN model. Other features, such as public transport modelling or the facility of being adapted to 'right hand' driving countries have not been discussed since they were not relevant to this project report.

Features such as:

- The calibration technique which combines the simulation and assignment stages, based on the most up to date equilibrium assignments algorithms.

- The 'entropy maximisation' technique used to update and to derive origin - destination matrices on the basis of traffic counts.

- The TRADVV suite of programs for matrix manipulations.

- Interactive analysis programs (SATLOOK, SATED, PLT) to examine output results and to test changes.

- Performance indices and statistical tests.

make SATURN one the more modern and comprehensive models for traffic managements schemes in urban areas.

CHAPTER 3 DATA COLLECTION AND NETWORK CODING

3.1 Introduction

The data required to run the SATURN model can be subdivided into three parts:

(1) The physical features of the network, such as, link lengths, number of lanes and lane widths, lane capacities and signal timings.

(2) Traffic volumes on links and turning movements at intersections, for the simulation duration of time.

(3) An Origin - Destination matrix, representing the demand for the simulation time period.

The information regarding these three issues, has been gathered from the individual or a combination of the following sources:

(1) Scott & De Waal Inc (1988) - mainly as far as the network characteristics are concerned; lane widths, link lengths, signal timings and partly traffic volumes.

(2) Scott & De Waal Inc (1989) - concerning primarily the O-D matrix for the PM peak hour, as well as additional traffic movements and link volumes.

It should be mentioned that the author has been, inter alia, responsible for the gathering and processing of the data concerning the derivation of the O-D matrix.

The data has been coded in the SATURN required format, as it is further discussed in this chapter.

3.2 The Study Area - Randburg CBD

The Randburg Central Business District (CBD) has been chosen for the purpose of this project report, because of the following main reasons:

(1) It is a relatively small CBD, yet it represents the conditions pertaining to other similar CBDs in the South African urban environment.

(2) The area is easily defined, as regards its boundaries.

(3) Data availability and the personal involvement of the author with the process of gathering and analysing the information concerning the Origin - Destination movements.

The Randburg CBD extends approximately from Dover Street, in the North, to Harley Avenue, in the south, and from Kent Avenue, in the west, to H.F. Verwoerd Drive, in the east (see Figure 3.1). It may be argued that the CBD extends up to Bond Street in the north and to Republic Road in the south and it includes the Municipal Offices and a strip along the eastern side of H.F. Verwoerd Drive and Jan Smuts Avenue. However, I believe that under the present conditions, Verwoerd Drive and Jan Smuts Ave. are serious barriers that hamper the movements between the weaker eastern parts and the main core area in the west.

The O-D study, referred to above, has been undertaken within the Inner Core CBD (see Figure 3.1). This area is predominantly the

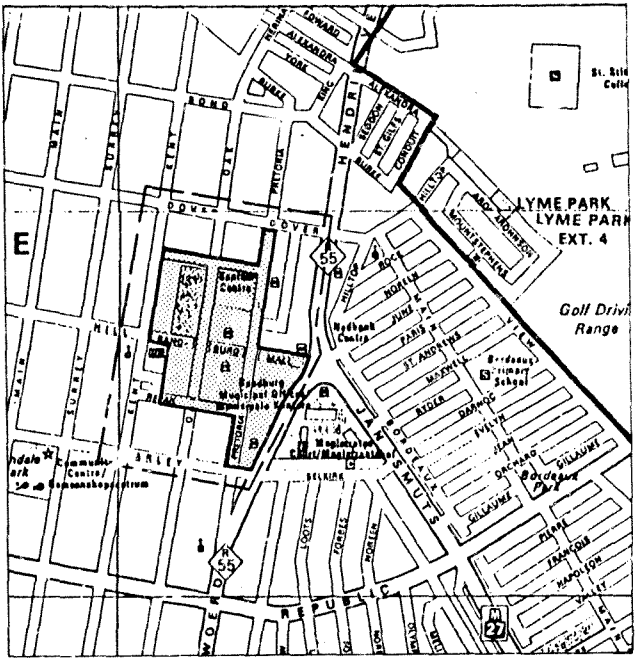

Figure 3.1 Locality Plan - Randburg CBD and O-D study area

Retail Inner Core CBD. Offices are mainly concentrated on the immediate collar of the CBD, i.e. facing Dover, Kent and Harley Avenue. The retail core attracts mainly shoppers and it is the major generator of traffic within the Randburg CBD.

3.3 The Origin - Destination survey

The O-D survey has been undertaken for the inner retail core study area (Scott & De Waal, 1989). The method employed was a car registration number plate matching technique. In effect, two O-D surveys have been undertaken. The one covers the PM peak period on a Friday afternoon, 13h00 - 17h30. The second covers the busy Saturday morning peak shopping time, 07h30 - 13h00. From the peak period results, a peak hour has been identified for each of the two peak periods surveyed. In this project report, the focus is on the PM peak hour, identified to occur between 16h00 and 17h00.

On the cordon stations, as well as all parking gates within the surveyed area, a minimum of two persons have been positioned. The detailed survey stations are given in Fig. B1, Appendix B. One person read out the vehicle registration number and the direction of travelling, while the other person wrote it down on the appropriate form, within 15 min. time intervals (see Appendix A).

3.3.1 The Method of Analysis of the surveyed data

For the total PM peak period, approximately 25 000 vehicle registration numbers have been recorded. The records have been punched in a computer in ASCII format. Then, using 'dBase III Plus' computer programs, the data has been analysed in order

to find matching registration numbers. In this process, about 6000 records could not be matched (seen only once) or were found to be dubious and therefore have been discarded. The remaining 18 000 records have been matched to give unique registration numbers of about 6 000 records, i.e. each vehicle has been seen on the average three times.

The main purpose of report mentioned above (Scott & De Waal, 1989) was to identify traffic patterns of vehicles and pedestrians, mainly on the two major one-way streets in the inner retail core, i.e. Pretoria Ave. and Oak Avenue. An O-D trip matrix has been derived for the analysed PM peak hour. However, the zones have been defined differently than in the SATURN format (see Section 3.5). Also, only major O-D pairs and trip ends have been derived.

For the purpose of the present project report the investigation has been extended to obtain a full observed O-D matrix and in the format required in the SATURN model. Thus 4070 trips have been identified to occur within the PM peak hour in the study area named 'Small' (see Section 4.2).

3.4 Traffic movements counts

Traffic counts at intersections have been obtained from the reference Scott & De Waal (1988). In addition, traffic counts have been undertaken at various intersections within the study area in the two months following the O-D study, in order to confirm or to update the previous counts, for the PM peak hour. Most of the updated counts confirmed the already available counts. The counts have been used for three main purposes, as follows:

(1) To help with the derivation of the observed O-D matrix.

During a similar origin - destination survey, traffic counts are undertaken parallel to the car registration numbers. They are used to complement the estimated O-D flows since not all registration numbers are normally recorded. These counts are particularly useful at cordon stations to help with the estimation of 'external' trip ends. Unfortunately in this survey, the manpower resources have already been extended to the limit in order to man all stations (54 persons have been positioned in 28 stations) and therefore additional traffic counts have been undertaken on other similar days.

(2) To be used in the model to derive O-D matrices from traffic counts, as is discussed further in Chapter 4.

(3) To be coded in the SATURN network so that they can be used in the model for statistical comparisons - observed versus estimated.

The traffic count movements are shown in Appendix N.

3.5 Coding of the road network and the observed O-D matrix

In the SATURN model the road network may be coded on two levels, as follows: (see Van Vliet et al., 1987)

(1) 'Simulation' network, which is particularly detailed at the intersection (node) level and is used to code intersections in a dense CBD alike environment.

(2) 'Buffer' network, which is used to represent a collar surrounding the 'simulation' area. The buffer network is coded on a more conventional level of detail which is link based (*as opposed to node* based). Traffic volumes depend more on speed-flow relationships on the links rather than on delays at junctions.

In this project report the network has been coded in detail as a *'simulation' network.*

The intersections (nodes) have to be defined according to their 'type'. Five types of nodes may be defined in a network:

- External - connected to external zones
- Priority - for a give-way junction
- Roundabout - for roundabouts
- Traffic Signals - for signalised intersections
- 'Dummy' nodes - for flexibility in coding and for plotting purposes

The networks dealt with in this report include external, priority, traffic signals and dummy nodes. Appendix M gives the index to the shapes representing each intersection type in the *SATURN plots.*

For each intersection, the number of lanes, capacities of turning movements, permitted and prohibited movements as well as signal times of cycle and phases at traffic signals, have to be provided.

Zones are coded as being 'internal' or 'external'. In most conventional transportation models, external zones are associated with the cordon stations and internal zones are defined as being physically within the boundaries of the study area. In SATURN, however, a zone may be defined as being 'external' although it

physically resides internally in the study area. A common case where this type of coding is applicable, is at parking lots, physically internal to the study area.

In SATURN, a zone may be linked via a zone connector(s) to an internal link or to an external node. When a zone is defined as being 'internal', it is assumed that traffic to and from that zone is parked somewhere on the link between the two nodes defining that link (see Fig. 3.2a). However, if a zone is defined as being 'external', the zone is assumed to connect via a zone connector to an 'external' node so that traffic to and from the zone is undertaken on the link connecting to this 'external' node (see Fig. 3.2b). There are merits in coding a parking zone as an 'external' one, such as:

(a) the traffic to and from this zone can be easily checked on the connecting link and confusion can be avoided to whether the flows on the link are only associated with the parking zone or with other link volumes in the network.

(b) delays or parking charges at the entrances/exits can be simulated by assigning a 'time' value on the connecting link as a penalty.

Since in this project report the zones are either located on the cordon stations or are parking lots, all zones have been coded as being 'external', for reasons given above.

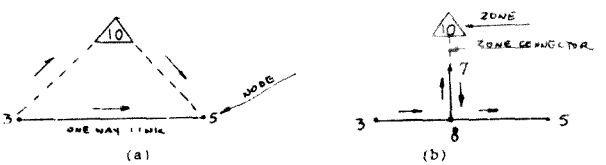

Fig. 3.2 'Internal' zone and 'External' zone coding in SATURN

In the network coding, coordinates for various nodes and zones have been provided in order to enable the plotting facilities, using the program P1. Observed traffic flows have also been included to be used in the analysis process.

A set of 'parameters is imperative in the network coding. These parameters provide default values, running options and titles.

Most of the information required for the coding of a network involve merely the gathering of existing data based on observations. One exception to that is the movement capacities (which do not always coincide with lane capacities). It requires some 'engineering judgement', since in the model traffic movement capacities based entirely on geometric constraints should be specified, i.e. as if no other vehicles or traffic signals interfere with the engagement of a particular movement. The program simulates the reduction of the turn capacities to take into account the other constraining effects.

An example of the 'Small Network' coding (see Section 4.2) is given in Appendix H. The cards beginning with '11111' define the network simulation. Those beginning with '22222' define the centroid connector data. The cards beginning with '55555' define node coordinates and those beginning with '77777' define observed counts. Each of the sets end with '99999' and the file ends with an additional '99999' to define end of input. The program SATNET is invoked to read in the file containing the coded network.

Coding of the Observed O-D matrix

The matrix derived on the basis of the observed O-D movements,

has been coded in the SATURN required format, i.e. 15 O-D pairs per line, Fortran format 15I5. Then, the TRADVV program M1 has been invoked to read in the card-image file and to convert it to a binary format, 'comprehensible' to the various sub-programs of the SATURN model. To this end, an example of the card-image file containing the observed matrix of the 'Small Network', is given in Appendix H.

3.6 Conclusions

In this chapter three main issues have been dealt with, as follows:

(1) The Origin - Destination survey in the context of the Randburg inner retail core CBD.

(2) The method of analysis of the surveyed O-D data and the relationship with traffic counts.

(3) The coding of the network and of the O-D observed trip matrix.

The O-D survey has been conducted on the basis of vehicle registration numbers entering and leaving the various zones. The matching of the registration numbers yielded relatively good results. On the basis of the O-D trips for the whole PM peak period, a PM peak hour O-D matrix has been obtained. In effect, after the O-D volumes have been adjusted slightly to concur with the information obtained from traffic counts, it showed an adjustment of only 10 per cent in comparison with the initial O-D trips derived from the survey (4070 trips versus 3665 trips).

Bonsal et al. (1984) discuss the variability in traffic flows occurring even in peak hours on a daily basis with regard to vehicle number plate registration data. In their study in Leeds, they found variations in traffic flows on a daily basis of up to 30%. This type of variation is not believed to occur in the Randburg CBD area. Traffic counts obtained in 1989 confirmed closely earlier counts undertaken up to two years prior to that.

Then, the coding of the network and the observed O-D matrix have been discussed, referring to the coding requirements of the SATURN model.

It should be noted, though, that in this chapter the descriptions relating to the network and the O-D matrix refer to the original network, further referred to as the 'Small Network' in Chapter 4. However, the same principles apply to the coding of the expanded network, further in this report referred to as the 'Large network'.

CHAPTER 4 ANALYSIS USING 'SATURN'

4.1 Introduction

The application of the SATURN model has been carried out on the study area described above in Section 3.2. Even though the study area is confined to the inner core CBD, for analysis purposes this area has been further split into two subareas. First, the analysis concentrates on the area for which an origin-destination matrix has been established from the O-D study. Then, the area has been expanded to include the peripheral signalised intersections. Thus, Section 4.2 deals with four analysis cases relating to the original study area. Section 4.3 comprises the analysis of five cases in the context of the expanded network. In the latter cases, it has been assumed that no prior matrix is available and only information relating to number of parking bays and traffic volumes at cordon intersections and at street junctions within the expanded study area are known.

In order to differentiate between the two networks, it has been decided to name the former network 'Small' and the expanded network 'Large' although the physical size of the two networks do not differ that much (see Figure 4.1). Also in the context of the 'large' network, the intersections on the cordon surrounding the study area are referred to as being linked to 'External' zones. The parking areas within the study area have been referred to as 'Internal' zones.

It should be noted, though, that this difference is not related to the coding of the networks in the SATURN model. For reasons discussed earlier in Section 3.5, all zones have been coded as 'External' in the SATURN format.

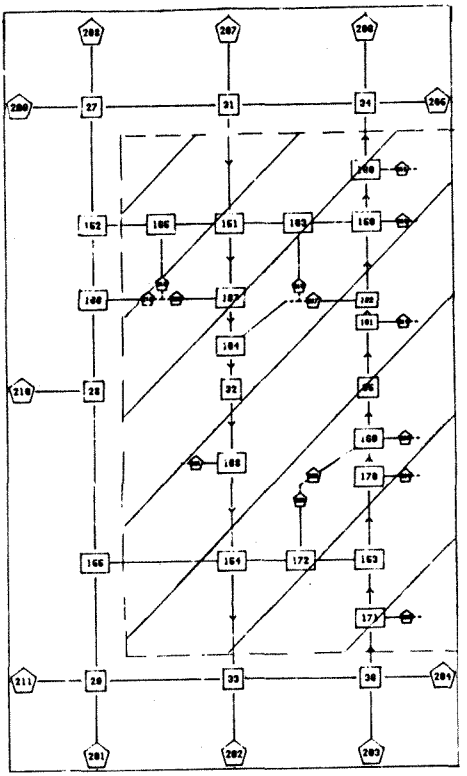

Figure 4.1 The 'Small' and the 'Large' networks

(The 'Small Network')

4.2 The 'Small Network'

The coded small network includes 17 zones linked to 22 external nodes, 16 priority junctions, 2 traffic signals and 1 dummy node. Additionally, 61 observed traffic movements have been input.

4.2.1 Run 1 - using the Observed O-D Matrix

The O-D matrix derived from the origin-destination study for the PM peak hour has been coded in a Card Reader file. The program M1 from the matrix manipulation suite TRADVV, has been invoked to read in the coded matrix. Then, a batch file *SATURN1.BAT* (see example in Appendix G) has been used to build the network, as well as to run the simulation - assignment loop for 10 iterations, using the matrix built by the programme M1. The results from the last simulation has been plotted using the plotting program P1 (see Figure C1). Outputs from this run are included in Appendix I. The flow chart for this run is given in Figure D1.

The result of the regression analysis (observed vs. estimated) for the 61 observed traffic movements yields a R-squared value of 0,8850. The scatter diagram and the line of 'perfect' fit for this run, is given in Figure 4.2.

In this particular run, the GEH value per link/movement is 3,33 which is less than 5.

The Mean Absolute Value of |V1 - V2|/V1 is 0,24. The average assigned volume is 243,7 veh/hr/link and the average estimated volume is 217,6 veh/hr/link.

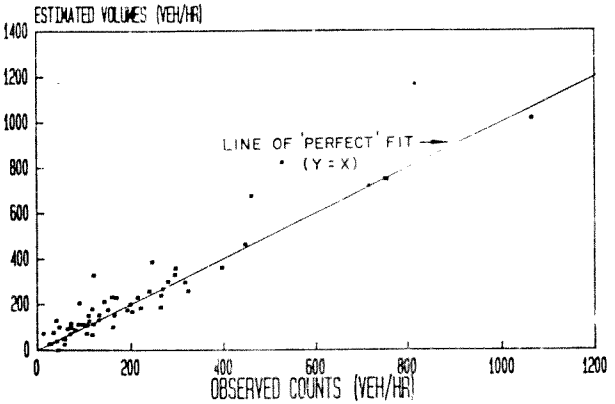

Figure 4.2 Comparison between observed and estimated traffic flows - Run No.1

The distribution of the differences is summarised in Table 4.1 below.

Table 4.1 Summary of Distribution of differences between Observed and Assigned traffic volumes - Run 1

Number of links with |V1 - V2| <= X (veh/hr)

X = 50	X = 100	X = 200
43(70%)	55(90%)	57(93%)

Operational efficiency indices for this run are summarised in Table 4.2.

Table 4.2 Operational efficiency and performance indices for the simulated one PM peak hour - Run 1

Total Delayed Time	=	25,8 hr.
Total Queued Time	=	41,8 hr.
Total Free Run Time	=	59,5 hr.
Total Travel Time	=	127,1 hr.
Total Travel Distance	=	1709,7 km.
Overall Average Speed	=	13,5 km/hr.
Total Number of Stops	=	12686
Total Fuel Consumption	=	306,6 lit.

4.2.2 Run 2 - using the Furness computed Matrix from Trip Ends only, without Prior Matrix

The trip-ends from the observed matrix have been used as input to the program M6 in order to compute an O-D matrix. No prior matrix has been used in this run since the only available prior matrix was the observed one from which trip ends have been derived. The Furness method assumes in this particular case a 'starting' matrix in which all elements are equal to unity.

A limit of 10 iteration has been set for balancing rows and columns.

Once again, a batch file SATURN2.BAT has been used to run 10 iterations in the simulation-assignment loop. The flow chart given in Figure D2 depicts the method employed to simulate this run. The results from the last simulation have been plotted and are shown in Fig. C2.

The result of the regression analysis (observed vs. estimated) for the 61 observed traffic movements yields a R-squared value of 0,5321. The scatter diagram and the line of 'perfect' fit for this run is given in Figure 4.3.

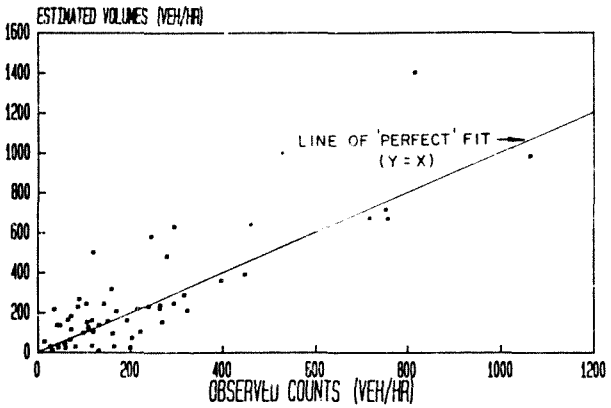

Figure 4.3 Comparison between observed and estimated traffic flows - Run No.2

The GEH test result, comparing the simulated and the observed counts, equals 6,90 per link, which is greater than 5. This result could be anticipated since trip-ends were the only input to the matrix-building program without any prior matrix.

The Mean Absolute Value of |V1 - V2|/V1 equals 1,20. The average assigned volume is 250,9 veh/hr/link and the average estimated volume is 220,4 veh/hr/link.

The distribution of the differences is summarised in Table 4.3 below and the operational efficiency indices are given in Table 4.4.

Table 4.3 Summary of Distribution of differences between Observed and Assigned traffic volumes - Run 2

Number of links with |V1 - V2| <= X (veh/hr)

X = 50	X = 100	X = 200
28(46%)	36(59%)	56(92%)

Table 4.4 Operational efficiency and performance indices for the simulated one PM peak hour - Run 2

Total Delayed Time	=	29,4 hr.
Total Queued Time	=	78,7 hr.
Total Free Run Time	=	65,1 hr.
Total Travel Time	=	173,1 hr.
Total Travel Distance	=	1893,5 km.
Overall Average Speed	=	10,9 km/hr.
Total Number of Stops	=	16030
Total Fuel Consumption	=	390,2 lit.

4.2.3 Run 3 - using the ME2 computed Matrix based on the Observed Prior Matrix

Before the simulation-assignment loop is initiated, the program SATME2 has been used to derive a better O-D matrix. Consequently this matrix was input to the assignment phases in the iterative procedure. The program SATME2 has been used in this particular run in the 'Update' mode. That is to say that the derived matrix is computed on the basis of counted traffic movements, as well as on the basis of a prior matrix - in this case the observed O-D matrix.

First an assignment run of the program SATASS is invoked to produce a PIJA file (elements representing the proportion (P) of trips between any O-D pair (IJ) which uses the counted link (A)). Then, an iterative procedure similar to the Furness matrix-balancing method is undertaken by the program to produce a matrix so that when it is assigned it will reproduce link flows resembling to those that were input to the program as constraints.

A simulation-assignment followed, using the matrix derived by SATME2. The 'Outer Loop' has been employed to derive the new matrix. The procedure described above was twice repeated as stable results have been obtained in fact after one loop (see the flow chart in Figure D3).

The batch file SATURN3.BAT was used in the simulation-assignment loop of 10 iterations (see Appendix G). The traffic volumes resulting from the final simulation were plotted, as shown in Figure C3.

The result of the regression analysis (observed vs. estimated) for the 61 observed traffic movements yields a R-squared value of 0,9673. The scatter diagram and the line of 'perfect' fit for this run, is given in Figure 4.4.

The GEH test result equals 1,34 per link which is a considerable improvement over the result in Run No.1 (using the original O-D matrix).

The Mean Absolute Value of $|V1 - V2|/V1$ equals 0,086. The average assigned volume is 214,1 veh/hr/link and the average estimated volume is 214,2 veh/hr/link.

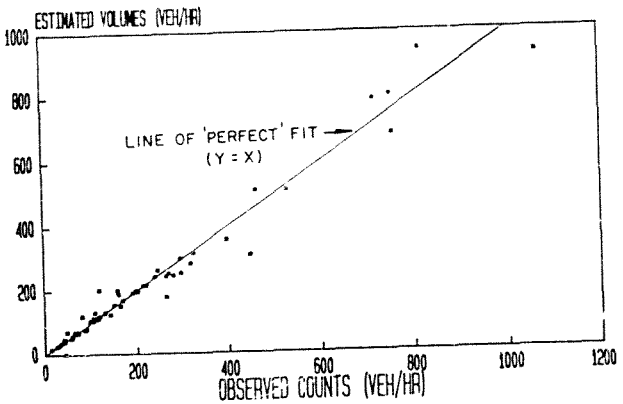

Figure 4.4 Comparison between observed and estimated traffic flows - Run No.3

The distribution of the differences is summarised in Table 4.5 below.

Table 4.5 Summary of Distribution of differences between Observed and Assigned traffic volumes - Run 3

Number of links with |V1 - V2| <= X (veh/hr)

Y = 50	X = 100	X = 200
54(88%)	59(97%)	61(100%)

Operational efficiency indices for this run are given in Table 4.6.

Table 4.6 Operational efficiency and performance indices for the simulated one PM peak hour - Run 3

Total Delayed Time	=	15,7 hr.
Total Queued Time	=	0,0 hr.
Total Free Run Time	=	50,6 hr.
Total Travel Time	=	66,3 hr.
Total Travel Distance	=	1443,4 km.
Overall Average Speed	=	21,8 km/hr.
Total Number of Stops	=	3925
Total Fuel Consumption	=	172,1 lit.

4.2.4 Run 4 - using the ME2 computed Matrix without Prior Matrix, based on link volumes

In this particular run the procedure described in section 4.2.3 has been repeated, only that this time no prior matrix has been provided to the program SATME2. Thus, the computed matrix has been entirely based upon counted links and traffic movements.

It may therefore be said that this run resembles to Run No.2 with the difference that in the Furness method the constraints are on trips ends and in SATME2 the counted link volumes are the constraints. The flow chart in Figure D4 shows the procedure used to derive the computed ME2 matrix. It should be noted that in the process of deriving a matrix based only on traffic counts, as it is the case in this run, an 'Original' matrix is imperative to compute the first PIJA factors (see Figure D4). Since trip-ends counts are part of the known parametres in this run, it is possible to compute on their basis a Furness matrix, without 'Prior' matrix.

However, such a matrix has already been available from Run No.2 and therefore it was used for this run as the 'Original' matrix.

The new matrix has been used as in previous runs in a batch file SATURN4.BAT with 10 iterations between the simulation and assignment. The traffic volumes from the final iteration have been plotted and are presented in Figure C4.

The result of the regression analysis (observed vs. estimated) for the 61 observed traffic movements yields a R-squared value of 0,9487. The scatter diagram and the line of 'perfect' fit for this run, is given in Figure 4.5.

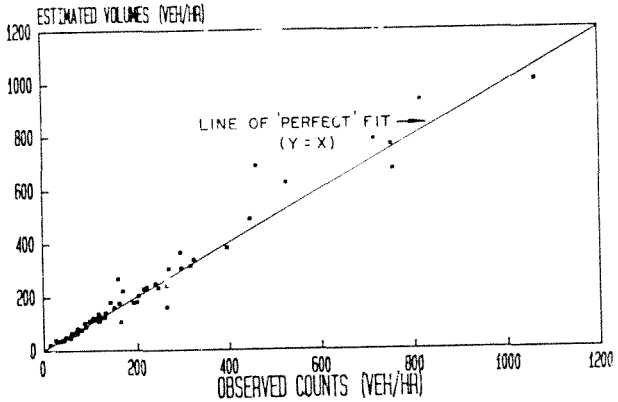

Figure 4.5 Comparison between observed and estimated traffic flows - Run No.4

The result of the GEH test for this run is 1,58 per link. This presents a considerable improvement over the results obtained in Run No.1 where the original O-D matrix was used.

The Mean Absolute Value of |V1 - V2|/V1 equals 0,115. The average assigned volume is 227,4 veh/hr/link and the average estimated volume is 214,2 veh/hr/link.

The distribution of the differences is summarised in Table 4.7.

Table 4.7 Summary of Distribution of differences between Observed and Assigned traffic volumes - Run 4

Number of links with |V1 - V2| <= X (veh/hr)

X = 50	X = 100	X = 200
54(85%)	56(92%)	60(98%)

Operational efficiency indices for this run are summarised below in Table 4.8.

Table 4.8 Operational efficiency and performance indices for the simulated one PM peak hour - Run 4

Total Delayed Time	=	18,6 hr.
Total Queued Time	=	0,0 hr.
Total Free Run Time	=	54,9 hr.
Total Travel Time	=	73,5 hr.
Total Travel Distance	=	1572,1 km.
Overall Average Speed	=	21,4 km/hr.
Total Number of Stops	=	4716
Total Fuel Consumption	=	192,9 lit.

4.2.5 Discussion

The results from four runs have been described in section 4.2, all of which are in the context of the 'Small Network'.

Yet, the data input was different in each run. Thus in Run No.1, the observed O-D matrix has been used and the coded observed traffic movements served only for statistical purposes. In Run No.2, a Furness computed matrix based on trip-ends only has been used. The coded observed counts served the same purpose as in the previous run. In Run No.3, the program SATME2 has been introduced in order to compute a better O-D matrix on the basis of the observed matrix together with the observed traffic counts. Also in Run No.4 the program SATME2 was employed. This time no observed matrix has been used and thus the program relied only on traffic counts. In order to start the computation process, an initial Furness matrix from Run No.2 has been supplied.

Comparison of the results of the four runs reveals that the best results have been obtained in Run No.3, followed by those of runs 4, 1 and 2, (see Figures 4.6 and 4.7).

As far as the O-D trip matrices are concerned, it may be commented that:

(1) The total number of trips assigned in runs 1 and 2 were 4170.

(2) The total number of trips assigned in Run No.3 was 3898, 272 (6,5%) trips less than for runs number 1 and 2.

(3) The total number of trips assigned in Run No.4 was 4208, 38 (0,9%) trips more than in runs 1 and 2.

The difference in the total number of trips assigned in runs 3 and 4 in comparison to the total number of observed trips assigned in runs 1 and 2, is a result of the Entropy Maximisation technique employed in the program SATME2. The O-D matrix computed by SATME2 is adapted according to the observed traffic counts so that when it is assigned to the network it will produce as close as possible the observed link volumes.

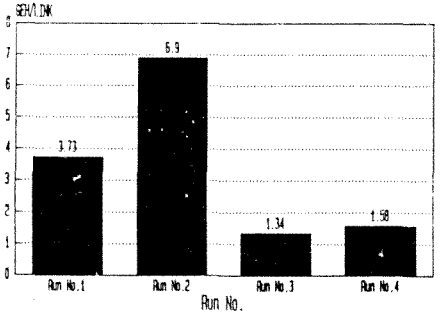

Figure 4.6 Comparison of GEH values for the four runs

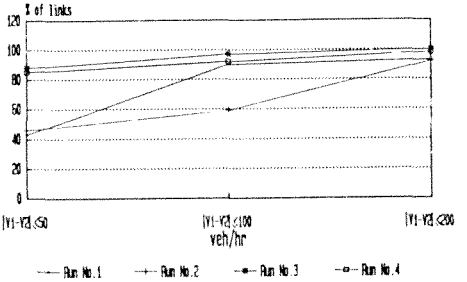

Figure 4.7 Comparison of the Distribution of differences (absolute values) - Observed vs Estimated volumes

A comparison between matrices has been undertaken, using the TRADVV program M2. In the comparison process, the observed matrix employed in Run No.1 has been compared to the Furness matrix used in Run No.2 and to the ME2 matrices used in runs 3 and 4. A summary of parameters compared is given in Table 4.9.

Table 4.9 A comparison between the observed matrix used in Run 1 and the matrices used in runs 2, 3 and 4

Parameter	Mat. 1-2	Mat. 1-3	Mat. 1-4
|V1-V2|< 10	68%	88%	75%
|V1-V2|< 20	82%	94%	86%
|V1-V2|< 50	93%	97%	97%
|V1-V2|<100	98%	100%	99%
GEH	2,85	0,86	2,13

The results presented above in Table 4.9 show that the nearest estimated Tij values, compared to the observed matrix, have been derived in Run No.3 where the ME2 method (with prior matrix) has been employed.

It should be noted that the ME2 method used in the 'Update' mode is particularly useful when an 'old' prior matrix is to be updated from recent counts, as described for example by Choraffa et al (1983). However, in the present project report the observed matrix (used as prior matrix) has been refined from the traffic counts gleaned approximately at the same time period.

Operational estimates computed by the model show similarities with the quality measures given in terms of statistical indices. However, it should be emphasized that these similarities are coincidental and by no means can they be linked. A comparison of time components, as a measure of Performance Index, is given in Figure 4.8 for the four runs.

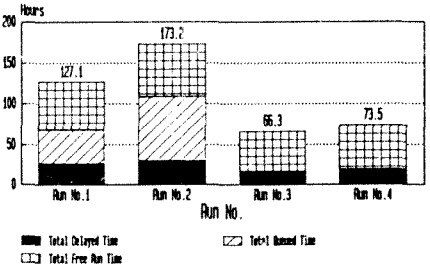

Figure 4.8 Comparison of Time components as a measure of Performance Index

4.3 The 'Large Network'

As mentioned in section 4.1, the large network includes the signalised intersections on the periphery of the small network. The coded network includes 21 zones linked to 26 external nodes, 19 priority junctions and 9 traffic signals, (see Figure 4.9).

In the coding of the 'Large Network', the cycle time at the two signalised pedestrian crossings (intersections Nos. 32 and 35), have been artificially changed from 50 sec to 70 sec in order to coincide with the cycle times of the other signalised intersections in the network. In the absence of a common cycle time, SATURN assumes in its calibration process 'flat' flow profiles, as if the network includes only priority junctions. Therefore, the provision of a common cycle time allows the model to coordinate the traffic movements in the study area and to improve the overall performance index.

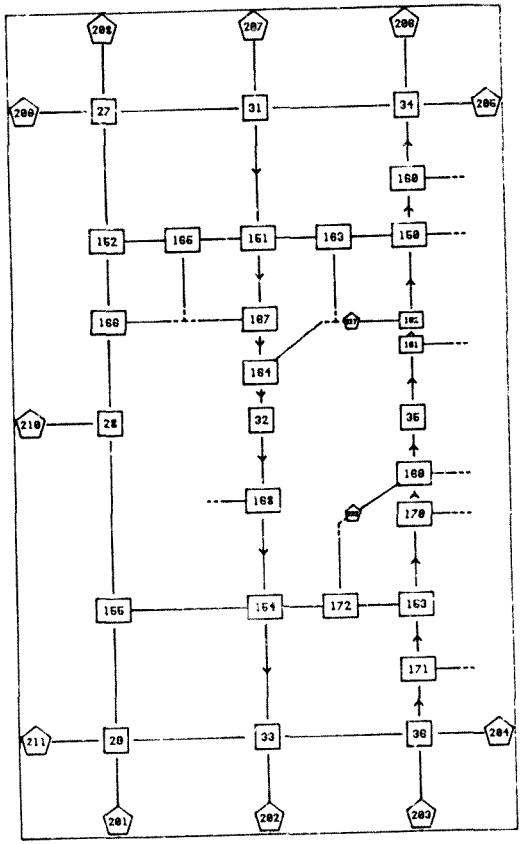

Figure 4.9 *The 'Large Network'*

This was not the case in the context of the 'Small Network', since the only signalised intersections were in fact the two pedestrian crossings and the model assumed flat flow profiles in the calibration procedure.

The coding of the observed traffic movements have an influence on the analysis in the context of the large network, as it is discussed further in the report.

4.3.1 Run 5 - using the Furness computed matrix based on available parking bays, without Prior Matrix

It has been assumed for this run that only counts at the cordon intersections and at street junctions within the study area are known. This assumption excludes counts on thirty links leading to the 'internal' parking zones. Therefore, in the coding of the network 92 observed traffic movements have been coded instead of 122 which would otherwise include the additional 30 links. Under the above stated assumption, no traffic counts are available on links connecting the 'internal' parking zones to the network and hence no trip ends are available for these zones. Yet, they should somehow be estimated in order to derive a matrix from trip ends. ('internal' zones would have otherwise nil trip ends and no traffic would be assigned to them).

Deriving Trip Ends from available parking bays

Since the number of the total available parking bays at each 'internal' zone (parking area) is known, an assumption has been made according to which all trips originating at 'external' zones (cordon intersections) are destined to 'internal' zones. Similar to that, it has been assumed that all trips originating at 'internal' zones are destined at 'external' zones.

Let TAE be the total attractions at all cordon stations

Let TPE be the total productions at all cordon stations

Let PRi be the number of parking spaces at an 'internal' zone

Let ΣPRi be the total available parking spaces at all 'internal' zones

Let Pi be the computed production for an 'internal' zone

Let Ai be the computed attraction for an 'internal' zone

Therefore, assuming that all trips attracted at 'external' zones are produced at 'internal' zones, the production of an individual 'internal' zone would be the proportion of parking bays at that 'internal' zone to the total parking bays at all 'internal' zones multiplied by the total attractions at 'external' zones, i.e.:

$$Pi = (PRi/\Sigma PRi) * TAE \quad (a)$$

The same reasoning applies in reverse to calculate attractions at 'internal' zones, assuming that trips produces at 'external' zones are only attracted at 'internal' zones, i.e.:

$$Ai = (PRi/\Sigma PRi) * TPE \quad (b)$$

Using this method, the required information to run such a model is limited to the cordon counts and to parking spaces available at each parking lot.

However, this method has at least two drawbacks:

(1) It is assumed that no trips are undertaken between 'internal' zones, i.e. from one parking to another.

(2) It is assumed that no through traffic occurs, i.e. all trips originating at cordon stations are destined to 'internal' zones and all trips originating at 'internal' zones are destined to 'external' zones.

According to the gathered information from the O-D study undertaken within the 'Small' network, it is known that the total trips from 'internal' to 'internal' parkings amount to approximately 6% of total trips and the through traffic trips amount to about 4% of the total trips. That is not the case within the 'Large' network, as it is further discussed in this section.

Within the 'Large' network there are 11 'external' zones and 10 'internal' zones, a total of 21 zones. The trip ends used in this particular run are summarized in Table 4.10. The productions and attractions for the 'internal' zones have been calculated according to the formulae (a) and (b).

Table 4.10 Summary of the Trip Ends employed in Run No.5

Zone	Parking bays	Productions	Attractions
1	-	174	615
2	-	53	227
3	-	565	0
4	-	449	646
5	-	544	723

Table 4.10 (Cont.)

Zone	Parking bays	Productions	Attractions
6	-	87	372
7	-	250	78
8	-	140	165
9	-	119	392
10	-	473	1170
11	-	149	195
Total 'External' zn.		3003	4583
12	110	109	71
13	160	158	104
14	472	467	306
15	2000	1979	1297
16	590	584	382
17	235	232	152
18	630	623	408
19	130	129	84
20	65	64	42
21	240	238	157
Total 'Internal' zn.		4583	3003
Grand Total		7586	7586

The trip ends presented in Table 4.10 have been used in the program M6 to compute a Furness type matrix. The matrix has been eventually used in the simulation/assignment loop.

Since the network used in this run does not include the observed volumes on links leading to 'internal' zones, the SATURN program does not include those links in its normal GEH test procedure. A program has therefore been written in GWBASIC to calculate the GEH value for any series of Observed vs. Estimated values,(see Appendix K).

The observed volumes for the links leading to 'internal' zones have been taken from the O-D study and the assigned volumes on these links have been taken from the final SATSIM iteration (10th). In fact the assigned volumes on these links are the trip ends as input to the program M6 to 'Furness' the matrix. The plotted volumes from the last simulation are shown in Fig. E1. The flow chart depicted in Figure F1 shows the SATURN Run No.5.

The scatter diagram and the line of 'perfect' fit for this run, is given in Figure 4.10.

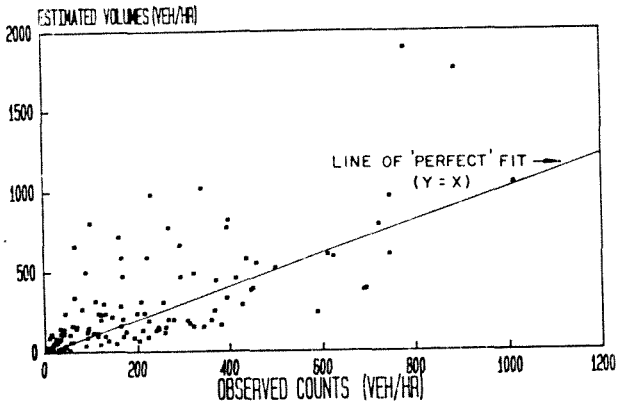

Figure 4.10 Comparison between observed and estimated traffic flows - Run No.5

The calculated GEH value for this run is 8,49, undoubtedly a poor value. The distribution of the differences is summarised in Table 4.11 below and Table 4.12 shows the efficiency indices.

Table 4.11 Summary of Distribution of differences between Observed and Assigned traffic volumes - Run 5

Number of links with |V1 - V2| <= X (veh/hr)

X = 50	X = 100	X = 200
44(36%)	72(59%)	100(82%)

Table 4.12 *Operational efficiency and performance indices* for the simulated one PM peak hour - Run 5

Total Delayed Time	=	115,8 hr.
Total Queued Time	=	663,4 hr.
Total Free Run Time	=	192,7 hr.
Total Travel Time	=	971,9 hr.
Total Travel Distance	=	5642,2 km.
Overall Average Speed	=	5,8 km/hr.
Total Number of Stops	=	119212
Total Fuel Consumption	=	2107,1 lit.

According to the O-D study it is known that the total 'internal' zones attractions are 1573 trips, which is (1573/3003) 52% of the estimated above. The 'internal' zones' productions are known to be 2537 trips, which is (2573/4583) 56% of the estimated above. These figures show that approximately 1/2 of the trips within the 'large' network are through traffic trips, i.e. between 'external' zones only. This may explain the poor results.

4.3.2 Run 6 - using the ME2 computed matrix without Prior Matrix, based on 100% link volumes

The network coded in this run is similar to the one used in the previous run. All cordon stations traffic movements, as well as 100% of traffic movements at street intersections within the study area have been provided, with the exception of traffic volumes on the links leading to 'internal' parking zones. Thus, in this run the emphasis was on testing the SATURN model to input data relating to cordon counts and at street intersections counts.

Firstly an O-D matrix had to be computed on the basis of the supplied information. From this point of view, the procedure employed in this case is similar to one used in Run No.4. since it is based on link volumes only. However, in this instance the 'Original' matrix input to SATASS in order to derive initial PIJA factors, is the Furness matrix derived for the previous Run No.5.

The program SATME2 uses the traffic movements provided for the various intersections and links (excluding the volumes on links leading to 'internal' zones, assumed not to be known) to derive a better O-D matrix than the matrix that provided the initial PIJA factors.

The flow chart depicted in Figure F2 shows the process employed to derive an O-D matrix using SATME2. Figure E2 shows the plotted volumes from the last simulation iteration.

The scatter diagram and the line of 'perfect' fit for this run, is given in Figure 4.11.

The GEH value for this run, calculated by means of the GWBASIC program, is 4,19 per link, which is a considerable improvement over the previous run.

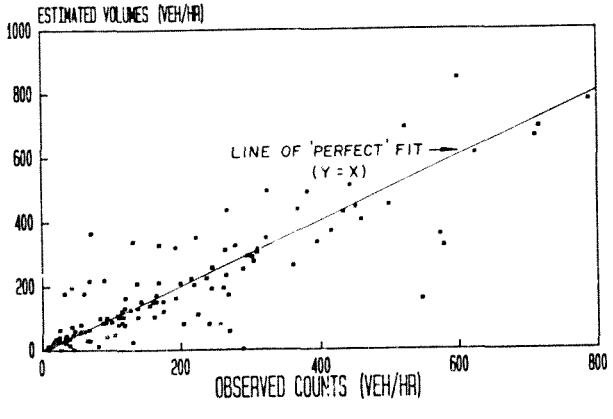

Figure 4.11 Comparison between observed and estimated traffic flows - Run No.6

The distribution of the differences is summarised in Table 4.13.

Table 4.13 Summary of Distribution of differences between Observed and Assigned traffic volumes - Run 6

Number of links with |V1 - V2| <= X (veh/hr)

X = 50	X = 100	X = 200
89(73%)	97(79%)	114(93%)

Operational efficiency indices for this run are summarised below in Table 4.14.

Table 4.14 Operational efficiency and performance indices for the simulated one PM peak hour - Run 6

Total Delayed Time	=	63,3 hr.
Total Queued Time	=	6,9 hr.
Total Free Run Time	=	171,1 hr.
Total Travel Time	=	241,3 hr.
Total Travel Distance	=	5059,8 km.
Overall Average Speed	=	21,0 km/hr.
Total Number of Stops	=	13398
Total Fuel Consumption	=	624,4 lit.

4.3.3 Run 7 - using the ME2 computed matrix without Prior Matrix, based on 86% link volumes

The process employed to derive an O-D matrix for this run is similar to the one used in Run No.6. The only difference concerns the traffic volumes provided to help deriving an O-D matrix. The network in the previous run included 100% of street intersections traffic movements, which in effect means seven intersections within the study area (excl. the cordon intersections for which all volumes were given). It has been assumed that in practice only 'full' counts at a particular junction are likely to be recorded. Therefore, by excluding one out of the seven intersections, as far as traffic movements are concerned, 86% of the internal street movements have been provided in this run compared to Run No.6.

The estimated traffic volumes resulting from the final simulation iteration have been plotted as shown in Figure E3.

The scatter diagram and the line of 'perfect' fit for this run, is given in Figure 4.12.

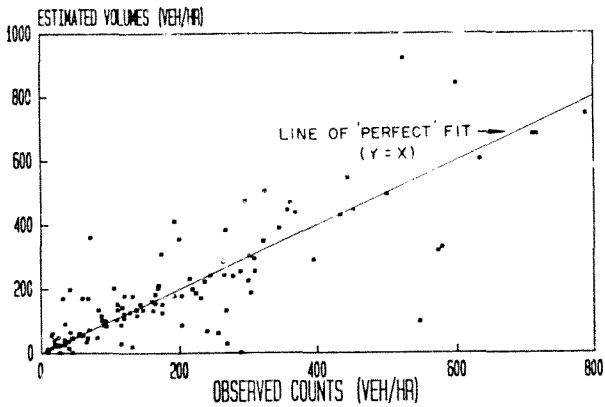

Figure 4.12 Comparison between observed and estimated traffic flows - Run No.7

The calculated GEH value for this run is 4,32 per link.

The distribution of the differences is summarised in Table 4.15.

Table 4.15 Summary of Distribution of differences between Observed and Assigned traffic volumes - Run 7

Number of links with |V1 - V2| <= X (veh/hr)

X = 50	X = 100	X = 200
86(70%)	92(75%)	106(87%)

Operational efficiency indices for this run are summarised below in Table 4.16.

Table 4.16 Operational efficiency and performance indices for the simulated one PM peak hour - Run 7

Total Delayed Time	=	64,6 hr.
Total Queued Time	=	15,0 hr.
Total Free Run Time	=	172,3 hr.
Total Travel Time	=	252,0 hr.
Total Travel Distance	=	5095,7 km.
Overall Average Speed	=	20,2 km/hr.
Total Number of Stops	=	14070
Total Fuel Consumption	=	643,7 lit.

4.3.4 Run 8 - using the ME2 computed matrix without Prior Matrix, based on 57% link volumes

This run is similar to the previous two runs with the exception that only traffic movements for four out of the seven internal

intersections have been provided. This constitutes 57% of the internal traffic movements that were coded in the network. The plotted assigned volumes from the final simulation iteration are shown in Figure E4. The scatter diagram and the line of 'perfect' fit for this run, is given in Figure 4.13.

The GEH value for this run is 4,70 per link. Table 4.17 summarises the distribution of the differences.

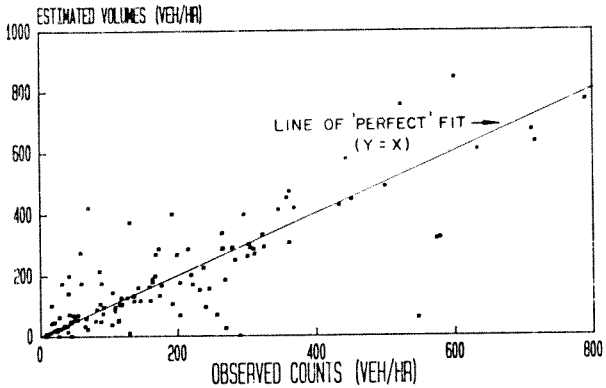

Figure 4.13 Comparison between observed and estimated traffic flows - Run No.8

Table 4.17 **Summary of Distribution of differences between Observed and Assigned traffic volumes - Run 8**

Number of links with |V1 - V2| <= X (veh/hr)

X = 50	X = 100	X = 200
79(65%)	99(81%)	111(91%)

Operational efficiency indices for this run are summarised below in Table 4.18.

Table 4.18 Operational efficiency and performance indices for the simulated one PM peak hour - Run 8

Total Delayed Time	=	65,0 hr.
Total Queued Time	=	14,1 hr.
Total Free Run Time	=	172,4 hr.
Total Travel Time	=	251,4 hr.
Total Travel Distance	=	5103,1 km.
Overall Average Speed	=	20,3 km/hr.
Total Number of Stops	=	14569
Total Fuel Consumption	=	645,4 lit.

4.3.5 Run 9 - using the ME2 computed matrix without Prior Matrix, based on 29% link volumes

This run is similar to the previous three runs. However, in this case traffic volumes for only two out of the seven 'internal' intersections have been provided in the coding of the network. The assigned traffic volumes resulting from the tenth simulation iteration have been plotted as shown in Figure E5.

The scatter diagram and the line of 'perfect' fit for this run, is given in Figure 4.14.

The GEH value for this run is 8,52 per link. This value is close to the result obtained in Run No.5 ,where the assigned matrix have been obtained from trip ends only, using the Furness method.

The distribution of the differences is summarised in Table 4.19.

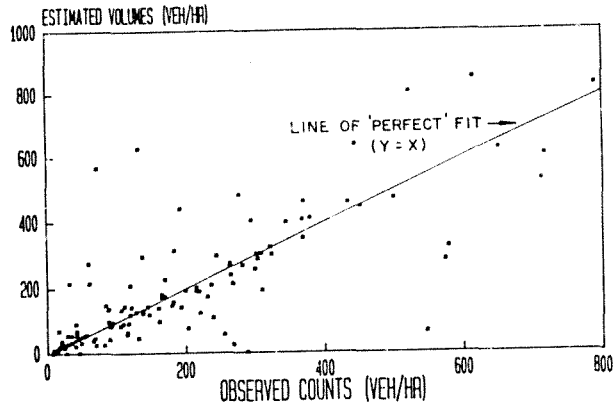

Figure 4.14 *Comparison between observed and estimated traffic flows - Run No.9*

Table 4.19 Summary of Distribution of differences between Observed and Assigned traffic volumes - Run 9

Number of links with |V1 - V2| <= X (veh/hr)

X = 50	X = 100	X = 200
83(68%)	98(80%)	109(89%)

Operational efficiency indices for this run summarised below in Table 4.20

Table 4.20 Operational efficiency and performance indices for the simulated one PM peak hour - Run 9

Total Delayed Time = 65,5 8r.
Total Queued Time = 62,4 hr.

Table 4.20 (Cont.)

Total Free Run Time = 171,8 hr.
Total Travel Time = 300,0 hr.
Total Travel Distance = 5083,3 km.
Overall Average Speed = 16.9 km/hr.
Total Number of Stops = 28741
Total Fuel Consumption = 775,8 lit.

4.3.6 Discussion

The results from five analysis cases, within the context of the expanded ('large') network, have been presented in Section 4.3.

In all five runs it has been assumed that no prior matrix is available. Therefore, the main source of information used as input to the model relies upon number of parking bays at 'internal' zones and traffic counts at the cordon stations, as well as at street junctions within the study area.

Run No.5 is similar to Run No.2 in that the O-D matrices used in both runs have been derived by the Furness method, without prior matrix. However, in Run No.5 no trip ends at the internal parking zones have been assumed to be known. The number of available parking bays at each of the parkings has been introduced as an additional data to facilitate the calculations of an initial Furness type O-D matrix, as presented in Section 4.3.1.

In the process of deriving an O-D matrix from traffic counts only, in Run No.6 (using the SATME2 program), an 'original' matrix is a pre-requisite to initiate the computation, (see 4.2.4). The matrix computed for the previous run has been used, similar to the procedure employed in Run No.4. All intersections traffic movements have been provided, excluding the volumes on links leading to 'internal' zones.

In the subsequent runs 7, 8 and 9, the number of traffic volumes at the internal junctions have been reduced, in comparison to those provided in Run No.6, to 86%, 57% and 29% respectively. The same procedure as in Run No.6 was used to derive the O-D matrix.

A comparison of the results of the five runs reveals that the best results have been obtained in Run No.6, followed by those of runs 7, 8, 9 and 5 (see Figures 4.15 and 4.16).

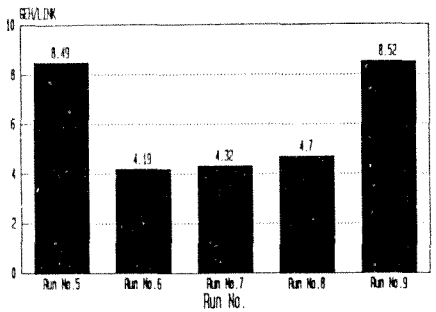

Figure 4.15 Comparison of GEH values for the five runs

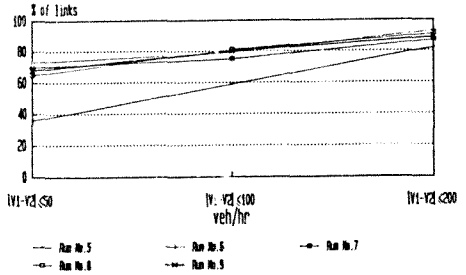

Figure 4.16 Comparison of the Distribution of differences (absolute values) - Observed vs Estimated volumes

Figure 4.17 shows the relationship between the the GEH value and the percentage link counts, based on runs 6, 7, 8, and 9.

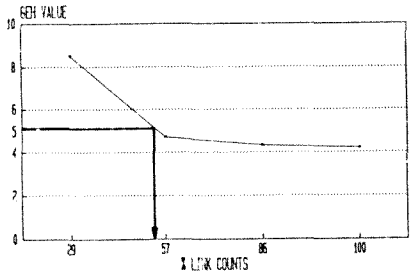

Figure 4.17 GEH values in relation to percentage link counts

The results presented in the graph show that a GEH value of 5 is obtained when approximately 55% of the internal link counts are provided (in addition to the cordon intersection counts).

As far as the O-D trip matrices are concerned, it may be commented that:

(1) The total number of trips assigned in Run 5 were 7586.
(2) The total number of trips assigned in Run No.6 was 5696, 1890(24,9%) trips less than for Run No.5.
(3) The total number of trips assigned in Run No.7 was 5699, about the same number of trips as in Run No.6.
(4) The total number of trips assigned in Run No.8 was 5553, 143(2,5%) trips less than in Run No.6.
(5) The total number of trips assigned in Run No.9 was 5584, 112(2,0%) trips less than in Run No.6.

As stated previously in Section 4.3.1, the number of trips produced and attracted by the 'internal' parking zones is known. For the purpose of calculating trip ends in Run No.5, it has been assumed that inflowing traffic is attracted to internal parking zones and that outflowing traffic originates at internal parking lots. This assumption is proven to be wrong on the basis of the available information. However, using the SATME2 program in the following runs 6, 7, 8 and 9, this inconsistency has been corrected on the basis of the observed traffic volumes. The matrices derived for these runs contain approximately the same total number of trips, which are about 25% less than in the matrix used in Run No.5. If for example, the total production trips from external (cordon) and internal (parkings) zones are added (based on the observed volumes), the total trips to be used in the 'large' network matrix would be 3003 + 2537 = 5540 trips. This number differs only 3% from the estimates made by SATME2.

It can therefore be said, that the Entropy Maximisation technique was capable of estimating good trip matrices from observed traffic counts, despite the fact that a relatively 'bad original matrix' derived on the basis of parking bays was firstly input

to the program to compute initial PIJA factors. Thus, the 'original' matrix from Run No.5 provided only the proportions for the traffic distribution, while the assigned volumes have been scaled down to match the observed traffic movements.

However, it should be emphasized that no conclusions can be made to whether a 'flat' 'original' matrix (i.e., no indications at all exists on O-D movements) to derive initial PIJA, would yield good results, even in the presence of good observed traffic flows. Knowledge of the number of parking bays, indicate by itself that fairly good estimates can be made in regard to the distribution of trips.

As for the 'Small Network', a comparison has been made between the elements of the matrix in Run No.6 and those of the matrices employed in runs 5, 7, 8 and 9, used in the context of the 'Large Network'. In the comparison process, the matrix employed in Run No.6 has been compared to the other four matrices, since this matrix was found to yield the best results in the absence of a prior observed matrix. A summary of parameters compared is given in Table 4.21.

Table 4.21 A comparison between the matrix used in Run No.6 and the matrices used in runs 5, 7, 8 and 9

Parameter	Mat. 6-5	Mat. 6-7	Mat. 6-8	Mat.6-9
$\|V1-V2\| \leq 10$	66%	90%	90%	86%
$\|V1-V2\| \leq 20$	78%	96%	95%	93%
$\|V1-V2\| \leq 50$	92%	98%	98%	97%
$\|V1-V2\| \leq 100$	95%	99%	99%	99%
GEH	3,31	1,06	1,02	1,42

The results presented above in Table 4.21 show little statistical difference between the 'most likely' matrix employed in Run No.6 and the matrices used in runs 7, 8 and 9. In effect, a GEH value less than 5 has been calculated from the comparison of the 'best' matrix (used in Run 6) and the 'worst' matrix (used in Run 5). However, it has been estimated that the number of trips used in Run No.5 is considerably higher (25%) than those used in the matrix for Run No.6. Moreover, the comparison of the assigned link volumes with the observed ones, reveals a wider discrepancy between the best results and the worst results (Run 6 versus Run 5).

This phenomenon shows a higher sensitivity in the statistical indices employed in this project report, when two matrices are compared, rather than when a comparison is undertaken between two sets of traffic volumes. A relatively small difference in the GEH value, for example, (between two matrices) may result in a much higher GEH value between the link volumes.

I believe that a major contributor to this fact is the inherent characteristics of the SATURN simulation and assignment algorithms. When the 'demand' matrix exceeds the capacity of the network, then only the number of trips that the network can handle within the simulation period of time, is actually assigned to the network. The remaining trips are treated as 'permanently' queued for the simulation period of time, in this case one hour, (Van Vliet, 1982 and Van Vliet et al., 1987). Thus, two matrices may show statistical similarities. Yet, it does not imply that when assigned to the network, the two synthesised assigned networks will be similar.

Operational estimates computed by the model are compared in regard to time components. This Performance Index shows similarities compared to statistical measures for the five runs.

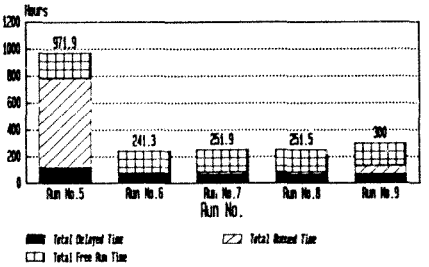

Figure 4.18 Comparison of Time components as a measure of Performance Index

4.4 The 'Small Network' versus the 'Large Network'

A comparison between the two networ.. reveals similarities as well as differences in respect to the input data and to the quality of the results. In Table 4.22 the availability of the input data is compared.

Table 4.22 Comparison of data availability for the two networks

Item	Small Network	Large Network
Cordon counts	Yes	Yes

Table 4.22 (Cont.)

Item	Small Network	Large Network
Intersection counts	Yes	Yes
O-D Matrix	Yes (observed)	No
Trip Ends	Yes	No (only 'External')

Given the information in Table 4.22, it is obvious that SATURN can be applied to calibrate the model. Four different options have been tested for runs 1 - 4 (*see Section 4.2*). The can be summarized as follows:

(1) Observed O-D matrix + all counts (for statistics only)
(2) Furness Matrix from observed trip ends + all counts (for statistics only)
(3) SATME2 Matrix from all counts + observed prior matrix
(4) SATME2 Matrix from all counts without prior matrix (*the Furness matrix from Run 2* was used to derive initial Pija factors).

As for the 'Large Network', SATURN could not be applied since no readily available O-D matrix existed (unless a complete 'flat' matrix was used to initiate the program). Additional information relating to the number of parking bays in each 'internal' zone was used to proportionally distribute the traffic at the cordon stations to and from the the internal zones and hence to derive balanced trip ends. These trip ends have been used to 'Furness' an initial matrix (see Run No.5, Section 4.3.1). All options investigated in the context of the 'Large Network' are similar to Run No.4; SATME2 was used to derive O-D matrices based on traffic

counts (100% to 26%) and the matrix used to derive initial Pija factors has been a Furness matrix derived from trip ends only. However, the initial matrix used in the 'Small Network' was of better quality than the one used in the 'Large Network'.

If for the 'Large Network' also 'internal' trip ends were known, then the investigation would become similar to that in Run No.4.

A comparison between the two networks in relation to items influencing the quality of the results is given in Table 4.23.

Table 4.23 Comparison of quality of data input and quality of results for the two networks

Item	Small Network	Large Network
Trip Ends	'good'	'bad'
Initial Matrix	Furness from observed trip ends (Runs 2,3,4) 'good'	Furness from parking bays and 'external' zone counts (Runs 5-9) 'bad'
O-D Matrix	- Observed (Run 1) 'good'	-
	- Furness (Run 2) 'bad'	Furness (Run 5) 'very bad'
	- SATME2 + prior + counts (Run 3) 'very good'	-
	- SATME2 + counts + initial Furness matrix (Run 4) 'good'	SATME2 + counts + initial Furness mat. (Run 6,7,8) 'average' (Run 9) 'very bad'

CHAPTER 5 CONCLUSIONS AND RECOMMENDATIONS

5.1 Summary and Conclusions

In this project report the SATURN model has been used to test the effect of data on model accuracy and operational efficiency on a relatively small network comprising the Randburg inner core CBD.

Firstly, the effect of data has been tested on a confined area ('Small Network') for which all information regarding the calibration of the model was known. An origin - destination matrix has been derived from actual observations and traffic counts had been available for all the intersections in the study area, including all trip ends.

Then, the study area has been expanded to include the peripheral signalised intersections. Since no observed O-D matrix was available for this area, the simulated situation was that of a study area for which the available data include cordon counts, intersection turning flows and the number of parking bays at each of the parking zones.

Within the context of the 'Small Network', four runs have been undertaken, each of whom uses different data input. Thus, in the first run an observed matrix has been input to the program. In the second run a matrix derived by the Furness method from trip ends has been used. In the third run a matrix derived by the subprogram SATME2 on the basis of observed counts and the observed matrix, has been used. In the fourth run a matrix derived by SATME2 on the basis of link volumes has been employed.

Within the context of the 'Large Network', five different runs have been undertaken. The first of them uses a matrix computed by the Furness method on the basis of trip ends derived from cordon counts and parking bays at the internal zones. The following four runs make use of a matrix derived by SATME2 on the basis of traffic volumes. The provided traffic flows are gradually reduced from 100% to 29%.

A summary of the nine runs and a measure of the 'goodness of fit' (GEH) between observed and assigned flows, is given in Tables 5.1 and 5.2. A GEH value of 5 and less is considered to represent good results.

Table 5.1 Summary of runs 1 - 4 ('Small Network')

Run No.	Network & O-D Matrix		Matrix building Method	GEH
	Net.	Matx.		
1	Small	Obs.	M1(Card Reader)	3,33
2	Small	Tr.Ends only	M6 (Furness)	6,90
3	Small	Obs. + Counts	SATME2	1,34
4	Small	Tr.Ends +counts	SATME2	1,59

Table 5.2 Summary of runs 5 - 9 ('Large Network')

Run No.	Network & O-D Matrix		Matrix building Method	GEH
	Net.	Matx.		
5	Large	Tr.Ends (park.)	M6 (Furness)	8,49
6	Large	Tr.Ends (park.) +Counts 100%	SATME2	4,19
7	Large	Tr.Ends (park.) +Counts 86%	SATME2	4,32
8	Large	Tr.Ends (park.) +Counts 57%	SATME2	4,70
9	Large	Tr.Ends (park.) +Counts 29%	SATME2	8,52

Operational efficiency indices for the various runs follow a similar path to the statistical indices although by themselves they are not seen as quality measures. Tables 5.3 and 5.4 summarise the operational indices for the nine runs.

Table 5.3 Operational Efficiency Indices - runs 1 - 4
('Small Network')

Run No.	TDT (HR)	TQT (HR)	TFRT (HR)	TtT (HR)	TTD (KM)	OAS (KM/H)	TNS	TFC (Lit.)
1	25,8	41,8	59,5	127,1	1710	13,5	12686	306,6
2	29,4	78,7	65,1	173,1	1893	10,9	16030	390,2
3	15,7	0,0	50,6	66,3	1443	21,8	3925	172,1
4	18,6	0,0	54,9	73,5	1573	21,4	4717	192,9

Table 5.4 Operational Efficiency Indices - runs 5 - 9
('Large Network')

5	115,8	663,4	192,7	971,9	5642	5,8	119212	2107,1
6	63,3	6,9	171,1	241,3	5060	21,0	13398	624,4
7	64,6	15,0	172,3	252,0	5096	20,2	14070	643,7
8	65,0	14,1	172,4	251,4	5103	20,3	14569	645,4
9	65,8	62,4	171,8	300,0	5083	16,9	28741	775,8

where,

TDT = Total Delayed Time

TQT = Total Queued Time

TFRT = Total Free Run Time

TTT = Total Travel Time, and TTT = TDT + TQT + TFRT

All time periods are in HOURS for all vehicles in the system during the 1 hour simulation period investigated.

TTD = Total Travel Distance, in KM.

OAS = Overall Average Speed, in KM/HR.

TNS = Total Number of Stops, for all vehicles during 1 hr.

TFC = Total Fuel Consumption, in LITRES for all vehicles during the 1 hr. simulation period.

The fuel consumption statistics are based upon a formula presented in Chapter 2.

In this project report, the amount and quality of the data requirements have been tested as a trade-off measure against the quality of the model output. The trade-off between input and output quality, based on the current investigation, is given in Table 5.5 (also see Tables 4.22, 4.23, 5.1, 5.2).

Table 5.5 Input quality versus Output quality

% of Cordon Counts	% of Link Volumes	% of Trip Ends	% of Internal zone parking bays	Method to obtain an O - D Matrix	Prior/ Initial O - D Matrix	Model Output
100	100	100	0	M1 (card-reader)	Yes	good
100	100	100	0	Furness	No	bad
100	100	100	0	SATME2	Yes	very good
100	100	100	0	Furness + SATME2	No	good
100	100	52	100	Furness	No	very bad
100	100	52	100	Furness + SATME2	No	good
100	86	52	100	Furness + SATME2	No	good
100	57	52	100	Furness + SATME2	No	good
100	29	52	100	Furness + SATME2	No	very bad

A number of conclusions may be drawn from the work undertaken in this project report, as follows:

(1) Cheaper solutions to a traffic study in a small CBD in South Africa using SATURN, are proved to exist.

(2) When a 'good' prior matrix, representing the traffic demand for the analysed time period, is available, then the matrix 'updating' program SATME2 improves the original matrix on the basis of traffic counts even more. That is the case in Run No.3. Yet, the extremely good results (due to the SATME2 computed matrix), are mainly because the 'prior' matrix was not a good 'old' matrix but actually an observed matrix derived at the same period of time. The results are therefore bound to be better than in the case of using an 'old' matrix.

Matzoros et al.(1987), validated the matrix estimation program SATME2 in a study of 'before' and 'after' in Manchester (U.K.). The available information in their study comprised an 'old' prior matrix, assembled from bits and pieces of information over an inconsistent period of time.

Nevertheless, the results after improving the matrix using SATME2 with updated traffic counts, were much more accurate than with other conventional techniques.

(3) It should be remembered that no matrix can be derived using the matrix estimation subprogram SATME2, without having some sort of 'prior' matrix. This comment seems to be of the utmost importance to potential users of SATURN that might think that an O-D matrix can be computed only on the basis of traffic counts.

(3) When only cordon stations counts and turning movements at steet intersections are available and the number of internal parking zone is known, then good results can be expected even if the traffic counts sample is decreased up to 57% of the internal link volumes.

(4) Although the updating of an existing matrix using SATME2 is found to yield good results when assigned to the network, it can only prove that the assignment algorithm 'in reverse' works. It does not necessarily imply that the individual Tij cells in the updated matrix are better than those in the observed matrix gathered by conventional means. They sometime may be worse (Matzoros et al.,1987). However, in this latter reference it is suggested that from a pragmatic point of view, accurate link volumes are more important than how many trips exactly are being predicted between an origin i and a destination j.

I believe that this argument may be true in the context of a dense network of roads in an urban area. If one uses in the model large areas, the effect of the updated matrix on the trip ends, may be more important. Therefore, in such cases care should be taken to compare the newly derived productions and attractions with those derived on the basis of land-use data. If need be, the updated matrix should be adjusted to reflect these inconsistencies.

5.2 Recommendations

The following recommendations may be made as regards the results from this study:

(1) All traffic counts at the cordon stations but only 55% to 60% of street intersections counts and the number of internal zone parking bays, may suffice to yield good results.

Alternatively, collection of data referring to the number of parking bays may be traded off against that of the internal zone trip ends.

(2) Using the information in (1) above together with the program SATME2, the following procedure may be used, for example:

(i) Extract from the available traffic counts for the analysed period of time those that represent trip ends.

(ii) Use the Furness Method to derive an initial O-D matrix from the trip ends obtained in (i).

(iii) Use the program SATME2 to derive the 'best' matrix.

(iv) Use the SATURN procedure of successive iterations SATSIM and SATASS until convergence criteria are satisfied.

5.3 Suggested Future Research

The following suggestions for future research using SATURN are proposed below:

(1) The model should be tested in other different types of urban environment in South Africa and comparison between studies like this one and other studies should be undertaken.

(2) The close relationships between SATURN and TRANSYT, as far as modelling of flow profiles, should be exploited to find out if a combination between the two models can be complementary.

To this ends, it is added that Van Vliet et al.(1987), mentions experiments in the U.K. to incorporate the two programs but with little success (mainly because the coding of the networks are different). That was the reason for the incorporation of the routine SATED into SATURN, in order to enable individual analysis of signalised intersections as a result of various cycle lengths and splits.

(3) The incorporation of the parking choice modelling, is proposed by Van Vliet for future research. I agree with this proposal because the present version of SATURN does not take into account the volumes of traffic generated by vehicles that occupy the road space in search for available parking spaces. Maher (1987) already expressed his opinion that biased results are obtained in the estimation of trip matrices by either the Entropy Maximisation or the Information Minimisation technique for vehicles observed more than once.

In the inner core CBD of Randburg this number has been estimated as roughly 10% of the total traffic. However, in Randburg CBD most parking are free of charge (except at Sanlam Centre) and the proportion may be higher in other areas where it is more difficult to find an empty parking bay.

REFERENCES

Abu-Eisheh, S.A. and Mannering, F.L. (1986). Traffic forecasting for small to medium sized urban areas. ITE journal, 56(9), pp. 41-45.

Bell, M.G.H. (1983). The estimation of origin-destination flows and their confidence intervals from measurements of link volumes: a computer program. Traffic Eng. & Control, 24(4), pp. 202-205.

Black, D. and Robson, R.M. (1986). Data collection and assignment for traffic management using registration numbers and CONTRAM. traffic Eng. & Control, 27(12), pp. 600-605.

Bolland, .D., Hall, M.D. and Van Vliet, D. (1979). SATURN: a model for the evaluation of traffic management schemes. Institute of Trasportation Studies, University of Leeds. Working Paper 106.

Bonsall, P., Montgomery, F. and Jones, C. (1984). Deriving the consistancy of traffic flow composition from vehicle registiation data. Traffic Eng. & Control, 25(7/8), pp. 358-364.

Chard, B.M. and Lines, C.J. (1987). TRANSYT the latest developments. Traffic Eng. & Control, 28(7/8), pp. 387-390.

Choraffa, A. and Ferreira, L.J.A. (1983). Using SATURN to assess the impact of traffic management measures in Liverpool. Traffic Eng. & Control, 24(1), pp. 14-22.

Davidson, P.W. (1986). Extending the technique of licence plate number matching: Central Edinburgh experience. ITE journal, 56(9), pp. 41-45.

Ferreira, L.J.A. (1981). The role of comprehensive traffic management in energy conservation. PTRC Summer Annual Meeting, Seminar L.

Hall, M.D., Van Vliet, D. and Willumsen, L.G. (1980). SATURN - A simulation - assignment model for the evaluation of traffic management schemes. Traffic Eng. & Control, 21(4), pp. 168-176.

Leonard, D.R., Tough, J.B. and Baguely, P.C. (1978). CONTRAM - a traffic assignment model for predicting flows and queues during peak periods. TRRL Report LR 841

Leonard, D.R. and Gower, P. (1982). User Guide to CONTRAM 4. TRRL Supplementary Report 735.

Lewis, S. and McNeil, S. (1986). Developments in microcomputer network analysis tools for transportation planning. ITE journal, 56(10), pp. 31-35.

Logie, D.M.W. (1979). TRAFFICQ - a comprehensive model for traffic management schemes. Traffic Eng. & Control, 20(11), pp. 516-518.

Maher, M.J. (1987). Bias in estimation of O-D flows from link counts. Traffic Eng. & Control, 28(12), pp. 624-627.

Matzoros, T., Randle, J., Van Vliet, D. and Weston, B. (1987). A validation of the SATURN and ME2 models using before-and-after suevey data fom Manchester. Traffic Eng. & Control, 28(12), pp. 641-643.

Robertson, D.I. (1984). Estimating origin-destination flows by simulating trip choice. Traffic Eng. & Control, 25(7/8), pp. 358-364.

Robertson, D.I. (1969). TRANSYT: a traffic network study tool. RRL Report LR 253.

Scott De Waal Inc., (1988). Randburg signal coordination study. (Report submitted to the Town Council Of Randburg).

Scott De Waal Inc., (1989). Randburg CBD - summary existing traffic patterns. (Draft report submitted to Town Council of Randburg).

Sheffi, Y. (1985). Urban Trasportation Networks: Equilibrium analysis with mathematical programming methods. Prentice - Hall.

Stephenson, B. and Teply, S. (1984). The verification of CONTRAM in Edmonton. Traffic Eng. & Control, 25(7/8), pp. 376-385.

Taylor, M.A.P. (1987). A PC - based method for traffic impact analysis. ITE journal ,57(6), pp. 27-32.

Van Vliet, D. (1982). SATURN - a modern assignment model. Traffic Eng. & Control, 23(12), pp 578-581.

Van Vliet, D. and Hall, M.D., (1987). SATURN 7.1 - A User's Manual - Universal Version. (Including a Technical document, SATURN Notes and a Matrix document).

Van Zuylen, H.J. and Willumsen, L.G. (1980). The most likely trip matrix estimated from traffic counts. Trasportation Research 14(B), pp. 281-294.

Willumsen, L.G. (1982). Estimation of trip matrices from volume counts: Validation of the model under congested conditions. PTRC Summer Annual Meeting, Proceedings.

Willumsen, L.G. (1981). Simplified transport models based on traffic counts. Transportation, Vol.10, pp. 257-278.

Wootton Jeffreys and partners (1980). MINITRAMP Manual.

APPENDIX A

Specimen of O - D survey data collection

SCOTT & DE WAAL INC.

LOCATION SKETCH:

Randburg City
PArcade.

NAME: Darryn v. Bwaye.
DATE: 2.12.88
STATION: 10
DIRECTION:

Friday 2/12

TIME	REG.NO.IN	REG.NO.OUT	TIME	REG.NO.IN	REG.NO.OUT
3.00	MRJ 539	HDG 670	3.00	LNX 557	CJZ 311
	MNT 661	LMY 46		LKK 223	MLX 393
	LCF 168	MYH		MXF 129	GSG 917
	JKP 869	MZZ 629		MXF 192	LKZ 485
	MWV 369	KCP 259		↓	KWT 548
	MHB 715	MDB 389		LSZ 380	LNH 274
	JBK 097	HYZ 863		BMX 583	HLN 254
	LZC 347	KRN 875		LLX 728	MNS 424
	LLP 397	KNZ 063		JBN 024	DSW 895
	DNK 217	KXL 881		MXG 675	JTL 142
	JMR 363	MGX 914		HBF 541	MKW 612
	MBI 491	JZR 419			DEL 754
	LPB 047	LYH 828			HVW 860
		MRP 664			LLR 426
		FYX 383			LMY 364
		YBA 4612			HHZ 010
		LDK 081			JLV 163
		KRY 899			MRS 879
		KSG 491			KXC 634
		CLN 936			KFH 272
		CBP 359			JHD 089
		KPP 113			HTX 474
		DBK 088			GZV 619
		MXB 529			MTX 068
		FPT 325			NRT 693
		LJF 028			KKK 028
		GNC 075			JFX 823
		UZB 271			LTR 160
		GWG 740			MXF 192
		JFM 636			CCY 434
		KHC 493			CMW 239
		JCX 242			HMY 762
					LCF 168

APPENDIX B

Origin - Destination survey area and stations

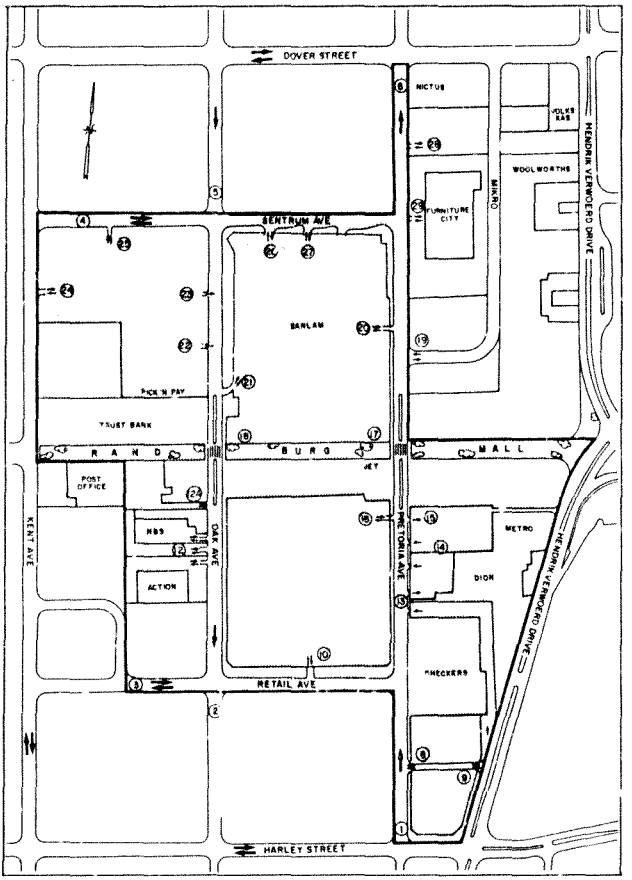

Figure B1 Origin - Destination survey area and stations

APPENDIX C

Assigned traffic volumes plots - Small Network

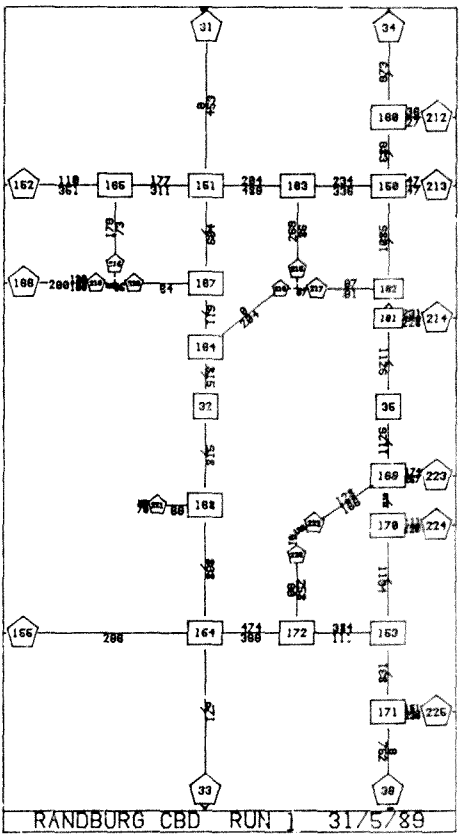

Figure C1 Run No.1 - Assigned traffic volumes

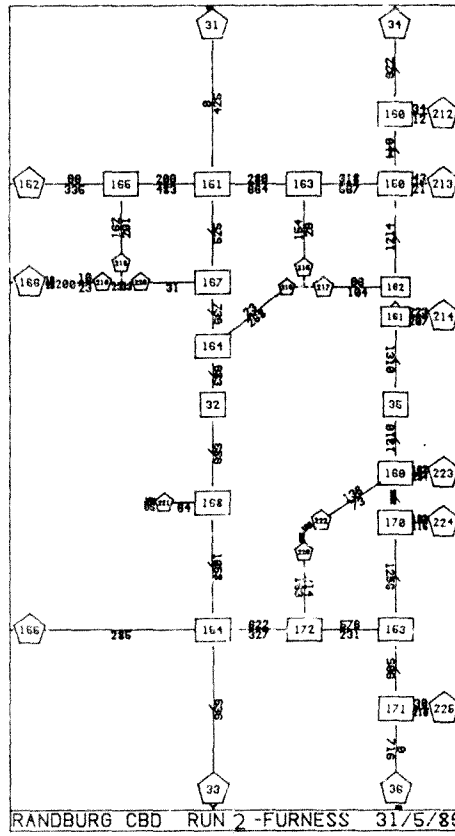

Figure C2 Run No.2 - Assigned traffic volumes

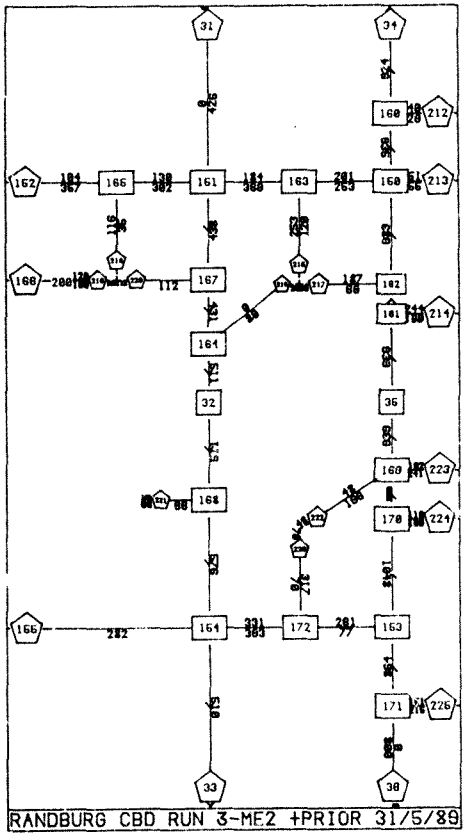

Figure C3 Run No.3 - Assigned traffic volumes

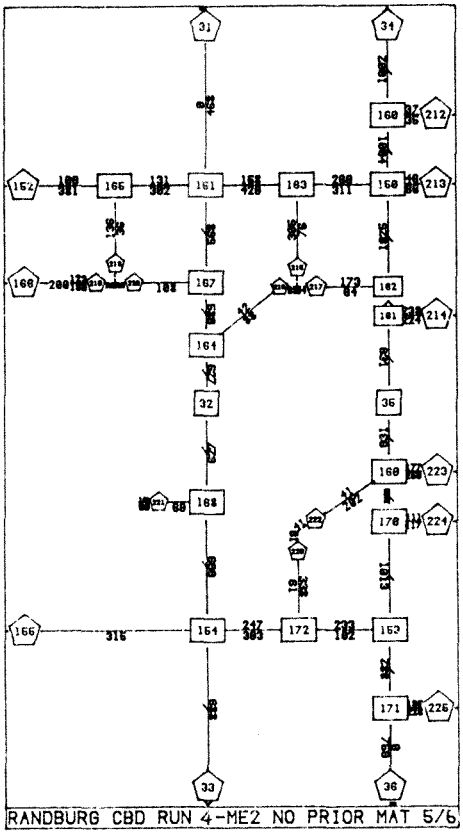

Figure C4 Run No.4 - Assigned traffic volumes

APPENDIX D

Flow Charts - Small Network

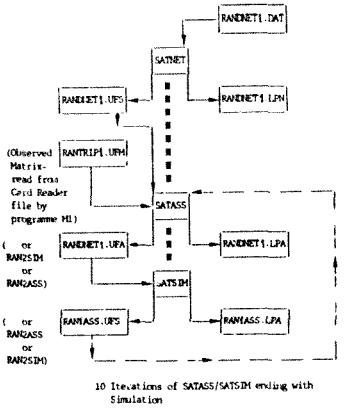

Figure D1 Run No.1 - Flow chart diagram

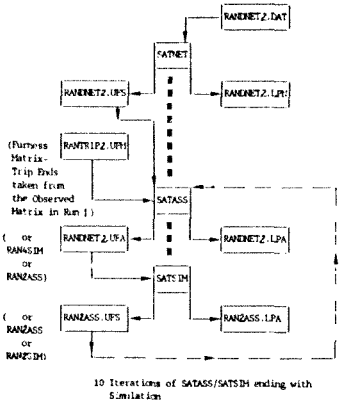

Figure D2 Run No.2 - Flow chart diagram

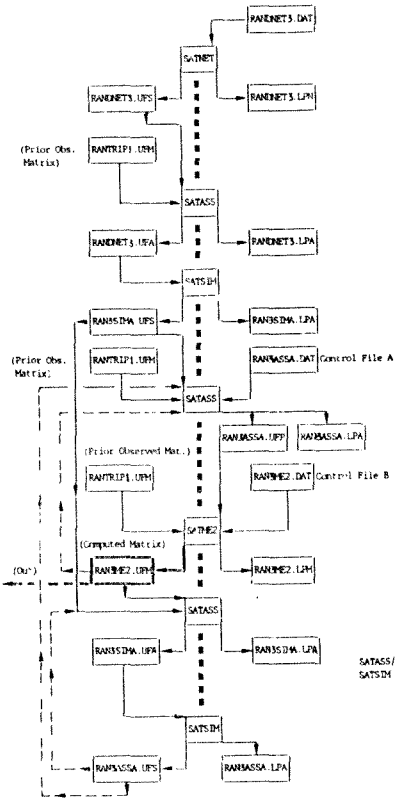

Figure D3 Run No.3 - Flow chart diagram for SATME2 matrix computation

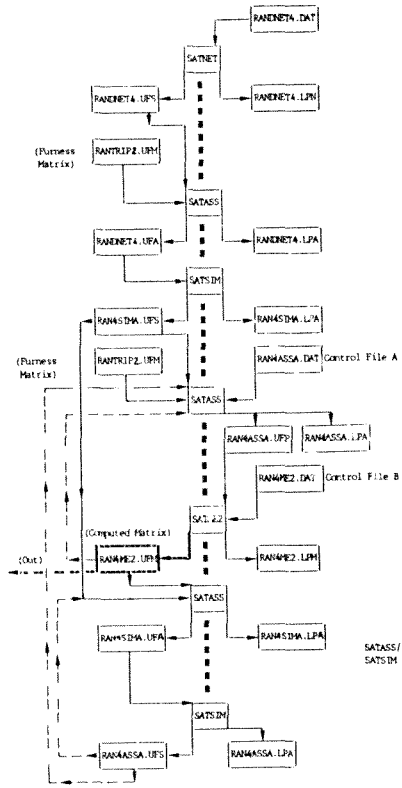

Figure D4 Run No.4 - Flow chart diagram for SATME2 matrix computation

APPENDIX E

Assigned traffic volumes plots - Large Network

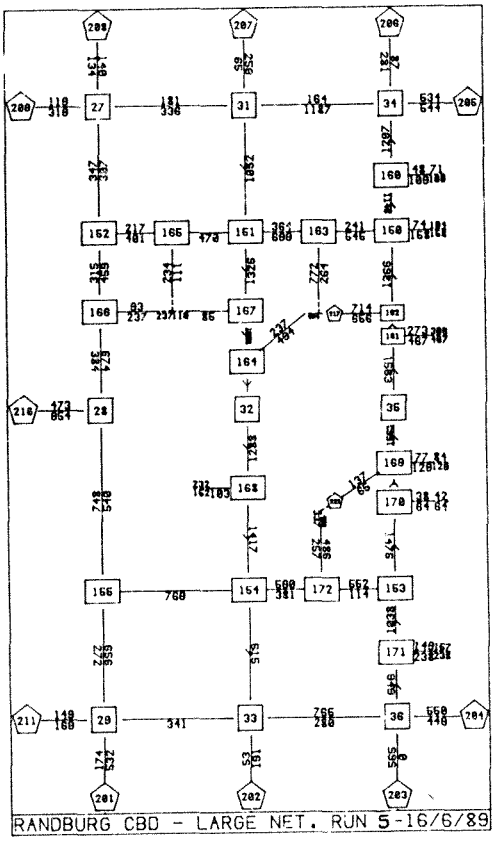

Figure E1 Run No.5 - Assigned traffic volumes

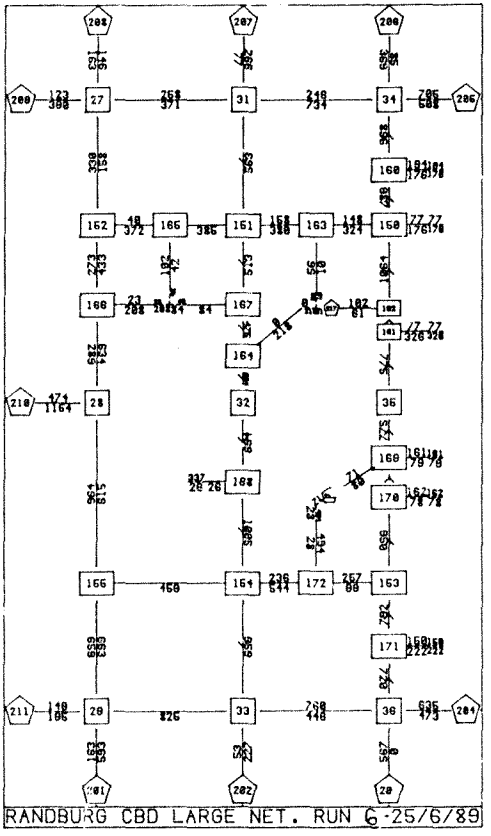

Figure E2 Run No.6 - Assigned traffic volumes

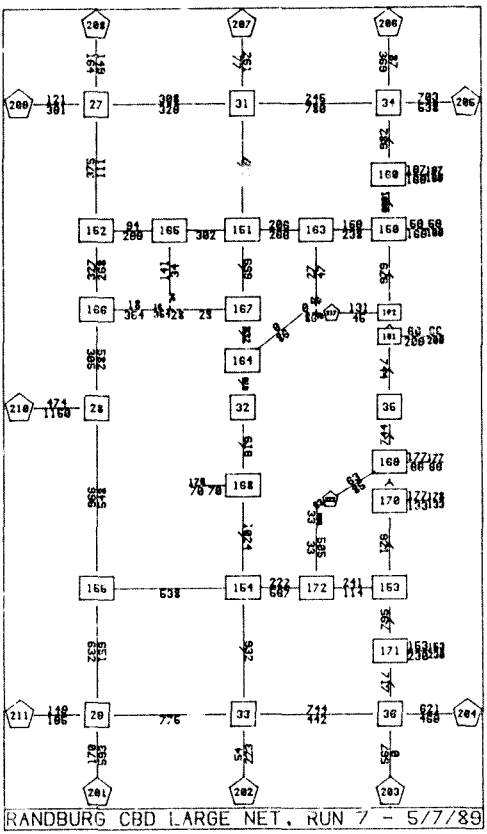

Figure E3 Run No.7 - Assigned traffic volumes

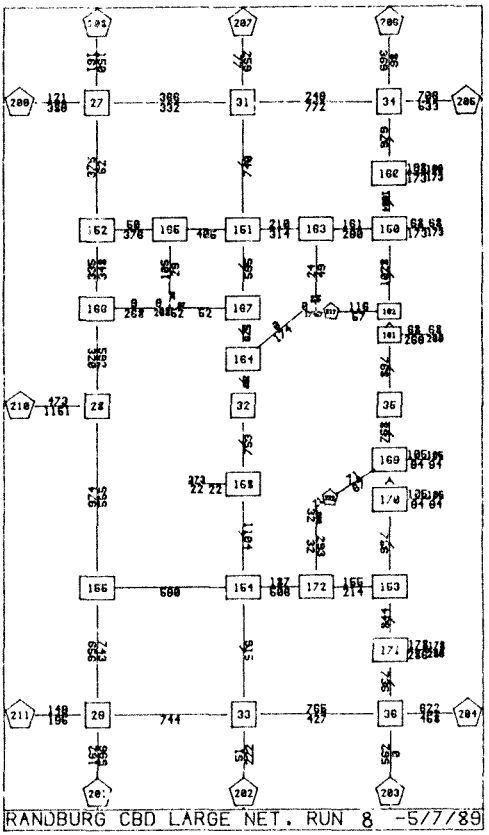

Figure E4 Run No.8 - Assigned traffic volumes

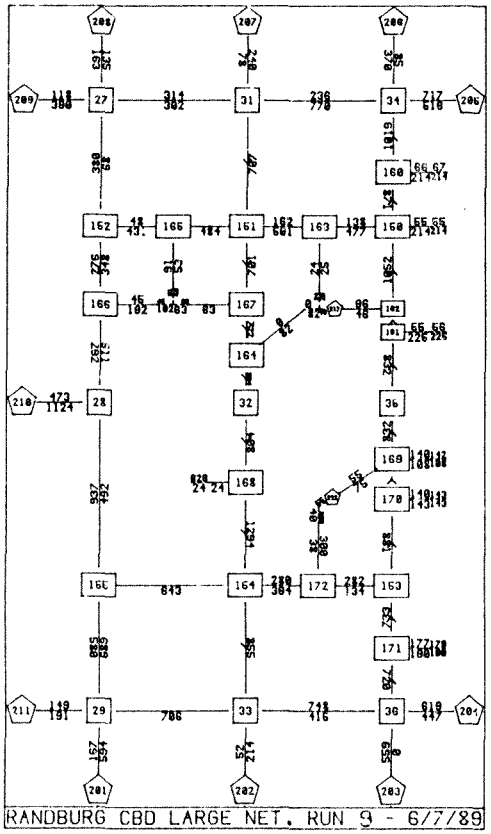

Figure E5 Run No.9 - Assigned traffic volumes

APPENDIX F

Flow Charts - Large Network

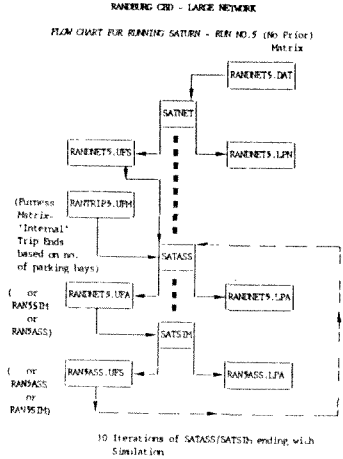

Figure F1 Run No.5 - Flow chart diagram

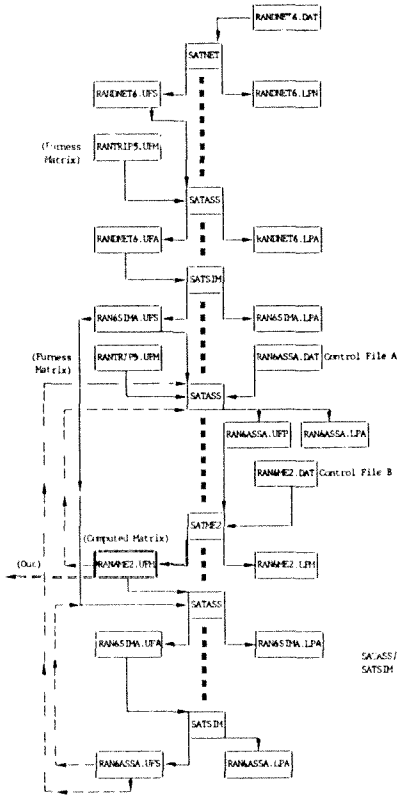

Figure F2 Run No.6 - Flow chart diagram for SATME2 matrix computation

APPENDIX 6

Specimen of Batch file for Run No.3

```
PATH=F:\DVV
COMMAND /C SATNET RANDNET3
COMMAND /C SATASS RANDNET3 RAN3ME2
COMMAND /C SATSIM RANDNET3 RAN3ASS
COMMAND /C SATASS RAN3ASS RAN3ME2
COMMAND /C SATSIM RAN3ASS RAN3SIM
COMMAND /C SATASS RAN3SIM RAN3ME2
COMMAND /C SATSIM RAN3SIM RAN3ASS
COMMAND /C SATASS RAN3ASS RAN3ME2
COMMAND /C SATSIM RAN3ASS RAN3SIM
COMMAND /C SATASS RAN3SIM RAN3ME2
COMMAND /C SATSIM RAN3SIM RAN3ASS
COMMAND /C SATASS RAN3ASS RAN3ME2
COMMAND /C SATSIM RAN3ASS RAN3SIM
COMMAND /C SATASS RAN3SIM RAN3ME2
COMMAND /C SATSIM RAN3SIM RAN3ASS
COMMAND /C SATASS RAN3ASS RAN3ME2
COMMAND /C SATSIM RAN3ASS RAN3SIM
COMMAND /C SATASS RAN3SIM RAN3ME2
COMMAND /C SATSIM RAN3SIM RAN3ASS
COMMAND /C SATASS RAN3ASS RAN3ME2
COMMAND /C SATSIM RAN3ASS RAN3SIM
COMMAND /C QQ
```

APPENDIX H

Specimen of the Small Network coding data file
and the Observed Matrix data file

```
 &OPTION
 PASSQ    =     F
 UPDATE   =     F
 PLOD     =     F, &END
  RANDBURG  INNER  CORE  CBD,  2ND  NETWORK-ORIGINAL  SMALL
NET.-21/5/89
 &PARAM
 LIST     =     T
 PRINT    =     F
 SPEEDS   =     F
 AUTOX    =     F
 AUTOZ    =     F
 PRSFD    =     F
 SUZIE    =     F
 PRINTF   =     F
 EXPERT   =     T
 COMPARE  =     F
 MTFLOW   =     T
 AMY      =     F
 DUTCH    =     F
 SAVEIT   =     T
 QUANTA   =     T
 MASL     =     5
 ISTOP    =    90
 LTP      =    60
 MAXZN    =   500
 MINSAT   =     0
 MINRED   =    10
 KPHMIN   =    10
 KPHMAX   =   100
 IFCC     =     2
 IFRL     =     1
 LCY      =    70
 NUC      =    10
 NITS     =     6
 LRTP     =     0
 NIT      =    10
 NOTUK    =     0
 NOPD     =     0
 NOMADS   =     1
 KNOBS    =     0
 MODET    =     1
 BUSPCU   = 3.00
 TDEL     = 3.00
 GAP      = 5.00
 GAPM     = 3.00
 GAPR     = 4.00
 SUET     = 0.20
 PPM      = 1.00
 PPK      = 0.00
 WAITW    = 1.00
```

```
 CAPMIN  =10.00
 ALEX    = 5.75
 ERP     = 5.00
 GONZO   = 1.00, &END
11111
   32     2     3     1     0    50    10    30
        164     4     7    60 6800  1 4     0  0 0
        168     0     0     0
                26    24     4   164     0   168     0
   35     2     3     1     0    50    10    30
        161     0     0     0
        169     4     7    60 6800  1 4     0  0 0     0  0 0
                22    28     4   169  0 0   161  0 0
  150     4     1
        163     2    15   125 3000G 1 2     0  0 0     0  0 0
        160     0     0     0
        213     1     5    20     0  0 0     0  0 0 1000G 1 1
        162     4    10   105 1200  1 1  6800  1 4  1000  4 4
  151     4     1
        165     2    12    95     0  0 0 3400G 1 2 1400G 2 2
         31     2    20   165 1400  1 1  3400  1 2  1400  2 2
        163     2     8    65 1400G 1 1 3400G 1 2     0  0 0
        167     0     0     0
  153     3     1
        172     2    13    95 3000G 1 2     0  0 0     0  0 0
        170     0     0     0
        171     4     9    80 1400  1 1  4800  2 4     0  0 0
  154     4     1
        155     2    23   190     0  0 0 3400G 1 2 1400G 2 2
        168     4    15   125 1400  1 1  3400  2 3  1400  4 4
        172     2    12    95 1400G 1 1 3400G 1 2     0  0 0
         33     0     0     0
  160     3     1
         34     0     0     0
        212     1     5    20     0  0 0 1000G 1 1     0  0 0
        150     4     9    75 6800  1 4  1000  4 4     0  0 0
  161     3     1
        162     0     0     0
        214     1     5    20     0  0 0 1000G 1 1     0  0 0
         35     4     6    50 6800  1 4  1000  4 4     0  0 0
  162     3     1
        217     1     5    20 1000G 1 1     0  0 0     0  0 0
        150     0     0     0
        161     4     6    55 1000  1 1  5600  1 4     0  0 0
  163     3     1
        151     2     8    65 2800  1 2 1000X 2 2     0  0 0
        150     2    15   125 1000  1 1  1600  2 2
        215     1     5    20 1000G 1 1 1000G 1 1     0  0 0
  164     3     1
        167     4     7    60 1000  1 1  4800  2 4     0  0 0
        216     1     5    20 1000G 1 1     0  0 0     0  0 0
         32     0     0     0
```

```
165     3    1
      152    2   12   95 2800   1 2 1000X 2 2     0   0 0
      151    2   12   95 1000   1 1 2800   1 2
      218    1    5   20 1000G  1 1 1000G  1 1     0   0 0
167     3    1
      220    1    5   20    0   0 0 1000G  1 1     0   0 0
      151    4   12  100 5600   1 4 1000   4 4     0   0 0
      164    0    0    0
168     3    1
      221    1    5   20    0   0 0 1000G  1 1     0   0 0
       32    4   13  110 5600   1 4 1000   4 4     0   0 0
      154    0    0    0
169     4    1
      222    1    5   20 1000G  1 1    0   0 0     0   0 0
       35    0    0    0
      223    1    5   20    0   0 0    0   0 0 1000G  1 1
      170    4    6   50 1000   1 1 5600   1 4 1000   4 4
170     3    1
      169    0    0    0
      224    1    5   20    0   0 0 1000G  1 1     0   0 0
      153    4    6   50 5600   1 4 1000   4 4     0   0 0
171     3    1
      153    0    0    0
      225    1    5   20    0   0 0 1000G  1 1     0   0 0
       36    4    6   50 5600   1 4 1000   4 4     0   0 0
172     3    1
      154    2   12   95 1000   1 1 3400   1 2
      226    1    5   20 1000G  1 1 1000G  1 1     0   0 0
      153    2   12   95 3400   1 2 1000X  2 2     0   0 0
200     2    4
      166    1    5   20 1000   1 1
      219    1    5   20 1000   1 1
 31     1    0
      151    2   20  165
 33     1    0
      154    2   19  155
 34     1    0
      160    4   11   90
 36     1    0
      171    4    6   50
152     1    0
      165    2   12   95
155     1    0
      154    2   23  190
166     1    0
      200    1    5   20
212     1    0
      160    1    5   20
213     1    0
      150    1    5   20
214     1    0
      161    1    5   20
```

```
  215     1     0
        163     1     5    20
  216     1     0
        164     1     5    20
  217     1     0
        162     1     5    20
  218     1     0
        165     1     5    20
  219     1     0
        200     1     5    20
  220     1     0
        167     1     5    20
  221     1     0
        168     1     5    20
  222     1     0
        169     1     5    20
  223     1     0
        169     1     5    20
  224     1     0
        170     1     5    20
  225     1     0
        171     1     5    20
  226     1     0
        172     1     5    20
99999
22222
    1    36   171
    2    33   154
    4    31   151
    5   152   165
    7   155   154
    3    34   160
    6   166   200
   12   212   160
   13   213   150
   14   214   161
   15   215   163   216   164   217   162
   16   218   165   219   200   220   167
   17   221   168
   18   222   169   226   172
   19   223   169
   20   224   170
   21   225   171
99999
55555
C   1   680   280
C   2   490   280
C   4   490  1095
C   5   280   915
C   7   280   460
C   3   680  1095
C   6   280   815
```

```
C   12   750   985
C   13   750   915
C   14   750   780
C   15   585   810
C   16   395   815
C   17   420   590
C   18   585   560
C   19   750   620
C   20   750   570
C   21   750   380
    31   490  1075
    32   490   690
    33   490   300
    34   680  1075
    35   680   690
    36   680   300
   150   680   915
   151   490   915
   152   300   915
   153   680   460
   154   490   460
   155   300   460
   160   680   985
   161   680   780
   162   680   810
   163   585   915
   164   490   750
   165   395   915
   166   300   815
   167   490   815
   168   490   590
   169   680   620
   170   680   570
   171   680   380
   172   585   460
   212   730   985
   213   730   915
   214   730   780
   215   585   830
   216   567   810
   217   605   610
   218   395   835
   219   375   815
   220   415   815
   221   440   590
   222   603   572
   223   730   620
   224   730   570
   225   730   380
   226   585   540
   200   337   815
99999
```

```
77777
  212  160          31
  160  212          41
  213  150          59
  150  213          54
  214  161         169
  161  214         256
  215  163         269
  163  215          80
  216  164          89
  164  216          44
  217  162         161
  162  217          66
  218  165         116
  165  218          34
  200  166         199
  166  200         130
  200  219         130
  219  200         199
  220  167         104
  167  220         114
  221  168         131
  168  221          68
  222  169          41
  169  222         203
  223  169         240
  169  223         192
  224  170         109
  170  224         119
  225  171         215
  171  225         164
  226  172         324
  172  226          64
  154   33         457
   36  171         752
   15  155         316
  155  154         150
  165  152         386
  152  165          97
  160   34        1017
  165  151  163   105
  165  151  167    14
   31  151  165    58
   31  151  167   295
   31  151  163    47
  163  151  165   268
  163  151  167   136
  163  150  160   159
  162  150  160   710
  162  150  163   278
  169   35  161   788
  172  153  170   245
```

```
  171   153   172    86
  171   153   170   716
  172   154    33   264
  172   154   155   221
  168   154   172   118
  168   154    33   443
  168   154   155    70
  155   154   172   108
  155   154    33    26
  164    32   168   522
99999
99999
```

```
ADD      =     F
CHANGE   =     F
DOT      =     F
INDOT    =     F
NAMES    =     F
FACTOR   =     F
KARDS    =     T
TAPE     =     F
PRINT    =     T
TOTALS   =     T
TRAMP    =     F
PMART    =     F
VVDART   =     F
MPNEXT   =     T
LONG     =     F
FLAT     =     F
PART     =     F
CSB1     =     F
CSB2     =     F
XF1      =  1.00
XF2      =  1.00
XF11     =  1.00
XF12     =  1.00
ADD2     =  0.00
NROWS    =    17
NCOLS    =    17
IROW1    =     0
IROW2    =     0
JCOL1    =     0
JCOL2    =     0
MTYPE    =     3
MODET    =     1
MSTACK   =     0 &END
TRIPS    VPH      0
 DETAILED MATRIX FROM O-D STUDY -RANDBURG CBD; SMALL NET. 21/5/89
   1     0    11    60     0     0     0    11    17    23    42    85    39     2   166
  79    66   151
   2     0     0     0     0     0     0     0     0     0     0     0     0     0     0
   0     0     0
   3     0     0     0     0     0     0     0     0     0     0     0     0     0     0
   0     0     0
   4     0   130    15     0    24     0     8     9     6    38    74    65    19    32
  26     7    13
   5     0     7     7     0     0     0     2     4     6    25    12    16     4     2
  16     9     0
   6     0     0     0     0     0     0     0     0     0     0     0   130     0     0
   0     0     0
   7     0    26    15     0     0     0     0     3     6     6     4     2    26    37
  37    13     0
  12     0     4    27     0    10     0     5     0     0     6     0     0     0     0
   0     0     0
  13     0     7    47     0    15     0     7     0     0    11     0     0     0     0
   0     0     0
  14     0    30   139     0    47     0    12     0     0     0     0     0     0     0
   0     0     0
  15     0    95   207     0   146     0    29     2     4    41     0     7     7     9
  16     7     0
  16     0    40    83     0    96   199     8     0     0    23     0     0     0     0
   0     0     0
  17     0    89    18     0     7     0    18     0     0    20     0     0     0     0
   0     0     0
  18     0   139   115     0     7     0   119     0     0     6     0     0     0     0
   0     0     0
  19     0    42   109     0    12     0    20     3     5    15     8    11    12    11
   0     9     0
  20     0    30    62     0    17     0    17     0     0     0     0     0     0     0
   0     0     0

  21     0    36   113     0     5     0    53     0     0    23     0     0     0     0
   0     0     0
```

APPENDIX I

Specimen of SATASS and SATSIM output file for
Run No.1

THE SATURN SUITE OF PROGRAMS

PROGRAM S2-7.1 SATURN ASSIGMENT PROGRAM SATASS

DATE 25/ 1/80 TIME 4:24:41

THE INPUT SATURN MAG TAPE FILE IS READ FROM CHANNEL 1

HEADER DATA FROM THE MAG TAPE FILE READ FROM CHANNEL 1

RUN NAME RANDBURG INNER CORE CBD, 2ND NETWORK-ORIGINAL SMALL NET.-21/5/89
CREATED BY PROGRAM S3
DATE AND TIME OF CREATION 25/ 1/80 4/24/ 6

LISTING OF THE PARAM VALUES TAKEN

MODET =	1	NITA =	10	MPIJA =	0
TITLE =	F	REGO =	F	COMPAR =	F
PRINTF =	F	EXPERT =	T	CCOUNT =	F
MTFLOW =	T	AMY =	F	PRPIJA =	F
PRTIJA =	F	SUZIE =	F	SAVEIT =	T
QUANTA =	T				
SUET =	0.20	PPM =	1.00	PPK =	0.00
GONZO =	1.00				

HEADER DATA FROM THE MAG TAPE FILE READ FROM CHANNEL 9

RUN NAME PRIOR ORIGINAL TRIP MATRIX-RANDBURG CBD; SMALL NET.(17 ZN.21/5/89)
CREATED BY PROGRAM M1
DATE AND TIME OF CREATION 25/ 1/80 4/ 7/57

MATRIX TITLE - DETAILED MATRIX FROM O-D STUDY -RANDBURG CBD; SMALL NET. 21/5/89
MATRIX SIZE - 17 ROWS 17 COLUMNS
TYPE OF ELEMENTS (MTYPE) = 3
ELEMENT DIMENSIONS - TRIPS
ELEMENT UNITS - VPH *10** 0

FILE ELEMENTS ARE WRITTEN AS REAL

MPIJA NE 0 OR MTFLOW OR CCOUNT = T - ANALYSE FLOWS FOR
THE FOLLOWING LINKS OR TURNS:

NO.	A	B	C	COUNT	TARGET	ASSIGNMENT LINK
1	212	160	0	31	31.0	152
2	160	212	0	41	42.9	71
3	213	150	0	59	59.0	154
4	150	213	0	54	57.5	35
5	214	161	0	169	169.0	156
6	161	214	0	256	265.1	76
7	215	163	0	269	269.0	158
8	163	215	0	80	80.0	92
9	216	164	0	89	89.0	160
10	164	216	0	44	44.0	96
11	217	162	0	161	161.0	162
12	162	217	0	66	70.7	80
13	218	165	0	116	116.0	164
14	165	218	0	34	35.1	106
15	200	166	0	199	199.0	148
16	166	200	0	130	130.0	108
17	200	219	0	130	130.0	150
18	219	200	0	199	199.0	166
19	220	167	0	104	104.0	168

20	167	220	0	114	115.7
110					
21	221	168	0	131	131.0
170					
22	168	221	0	68	68.7
115					
23	222	169	0	41	41.0
172					
24	169	222	0	203	203.3
120					
25	223	169	0	240	240.0
174					
26	169	223	0	192	192.3
123					
27	224	170	0	109	109.0
176					
28	170	224	0	119	119.2
129					
29	225	171	0	215	215.0
178					
30	171	225	0	164	164.0
134					
31	226	172	0	324	324.0
180					
32	172	226	0	64	64.4
143					
33	154	33	0	457	459.5
66					
34	36	171	0	752	752.0
30					
35	154	155	0	316	317.0
59					
36	155	154	0	150	150.0
68					
37	165	152	0	386	397.5
100					
38	152	165	0	97	97.0
51					
39	160	34	0	1017	1062.8
69					
40	165	151	163	105	105.0
39					
41	165	151	167	14	14.0
40					
42	31	151	165	58	58.0
44					
43	31	151	167	295	295.0
43					
44	31	151	163	47	47.0
42					
45	163	151	165	268	279.9
47					

46	163	151	167	136	142.0
46					
47	163	150	160	159	159.0
31					
48	162	150	160	710	755.8
37					
49	162	150	163	278	295.9
36					
50	169	35	161	788	816.0
28					
51	172	153	170	245	246.4
52					
52	171	153	172	86	86.0
55					
53	171	153	170	716	716.0
56					
54	172	154	33	264	264.0
63					
55	172	154	155	221	221.0
64					
56	168	154	172	118	119.0
60					
57	168	154	33	443	446.6
61					
58	168	154	155	70	70.6
62					
59	155	154	172	108	108.0
57					
60	155	154	33	26	26.0
58					
61	164	32	168	522	527.1
23					

THERE HAVE BEEN 61 CORRECT LINK OR TURN ANALYSES REQUESTED
AND 0 FATAL INPUT ERRORS
MAXIMUM NUMBER OF LINKS/TURNS ALLOWED = 300

OUTPUT FROM SATASS (SATURN ASSIGNMENT STAGE)

ASSIGNMENT RUN NUMBER 9

**** - WARNING - **** TRIPS FROM THE FOLLOWING ORIGIN ZONES CANNOT FIND PATHS TO THEIR DESTINATIONS FOR USER CLASS 1
- IS THE NETWORK DISCONNECTED IN ANY WAY?

ZONE	TRIPS
4	13.0
12	25.0
13	40.0
TOTALS	78.0

RESULTS FROM THE FIRST ALL-OR-NOTHING LOAD

SUM OF FLOWS*FIXED TIMES (A) = 268445.9 PCU-SEC/HR
SUM OF FLOWS*ALTERED TIMES (B) = 514451.1 PCU-SEC/HR
DELTA = (B-A)/B = 47.82 %

VALUE OF THE OBJECTIVE FUNCTION (Z) = 303532.5
(N.B. (A) ABOVE REPRESENTS A LOWER BOUND ON Z)
CURRENT DIFFERENCE OR UNCERTAINTY (Z - A) = 35086.6
= 11.55943 PER CENT

CONVERGENCE PARAMETERS OBTAINED FROM THE FOLLOWING ALL-OR-NOTHING LOAD

SUM OF FLOWS*TIME(FLOWS) (C1) = 514451.1 PCU-SEC/HR
SUM OF MIN. FLOWS*TIMES (C2) = 501579.6 PCU-SEC/HR
DIFFERENCE = 12871.5

DELTA = (C1 - C2)/C2) = 2.57 %

CURRENT LOWER BOUND ON OBJECTIVE FUNCTION (Z - (C1-C2)) =
290661.0
MAXIMUM LOWER BOUND (XMAXLB) =
290661.0

CURRENT DIFFERENCE OR UNCERTAINTY (Z - XMAXLB) =
12871.5
= 4.24058 PER
CENT

RELATIVE IMPROVEMENT (DZ/(Z - XMAXLB)) = 0.0000 PER CENT

RANDBURG INNER CORE CBD, 2ND NETWORK-ORIGINAL SMALL NET.-21/5/ PAGE 4

OPTIMUM COMBINATION # 1

LAMBDA (FRACTION OF AUXILIARY FLOWS TAKEN) = 55.50 %

VALUES OF THE OBJECTIVE FUNCTION IN PCU-SEC/HR -

AUXILIARY ALL-OR-NOTHING LOAD	-	301601.9	
PREVIOUS OPTIMIZED FLOWS	-	303537.5	
CURRENT OPTIMIZED FLOWS (Z)	-	300618.4	
IMPROVEMENT (DZ)	-	2914.2	0.969 %

STATISTICS OF CHANGES IN INDIVIDUAL LINK FLOWS

RMS DIFFERENCE OF OLD FLOWS FROM CURRENT A-O-N = 49.26

RMS DIFFERENCE OF OLD FLOWS FROM LATEST FLOWS = 27.34

AVERAGE ABS. DIFF OLD FLOWS FROM LATEST FLOWS = 6.44

CONVERGENCE PARAMETERS OBTAINED FROM THE FOLLOWING ALL-OR-NOTHING LOAD

SUM OF FLOWS*TIME(FLOWS) (C1) = 502100.7 PCU-SEC/HR
SUM OF MIN. FLOWS*TIMES (C2) = 502100.7 PCU-SEC/HR
DIFFERENCE = 0.0

DELTA = (C1 - C2)/C2) = 0.00 %

CURRENT LOWER BOUND ON OBJECTIVE FUNCTION (Z - (C1-C2)) =
300618.4
MAXIMUM LOWER BOUND (XMAXLB) =
300618.4

CURRENT DIFFERENCE OR UNCERTAINTY (Z - XMAXLB) =
0.0
= 0.00000 PER CENT

RELATIVE IMPROVEMENT (DZ/(Z - XMAXLB)) = 22.6403 PER CENT

RANDBURG INNER CORE CBD, 2ND NETWORK-ORIGINAL SMALL NET.-21/5/ PAGE 5

OPTIMUM COMBINATION # 2

LAMBDA (FRACTION OF AUXILIARY FLOWS TAKEN) = 0.00 %

VALUES OF THE OBJECTIVE FUNCTION IN PCU-SEC/HR -

AUXILIARY ALL-OR-NOTHING LOAD	-	301601.9
PREVIOUS OPTIMIZED FLOWS	-	300618.4
CURRENT OPTIMIZED FLOWS (Z)	-	300618.3
IMPROVEMENT (DZ)	-	0.0 0.000 %

STATISTICS OF CHANGES IN INDIVIDUAL LINK FLOWS

RMS DIFFERENCE OF OLD FLOWS FROM CURRENT A-O-N = 21.92

RMS DIFFERENCE OF OLD FLOWS FROM LATEST FLOWS = 0.00

AVERAGE ABS. DIFF OLD FLOWS FROM LATEST FLOWS = 0.00

>>>>> CONVERGENCE ACHIEVED AFTER 3 ITERATIONS >>>>

FINAL SUM OF FLOWS*TIME(FLOWS) (C1) = 502100.7 PCU-SEC/HR
= 139.5 PCU-HR/HR

NOTE THAT THE ABOVE TOTAL IS (A) GIVEN AS A RATE PER HOUR, NOT AS AN ABSOLUTE TOTAL OVER THE TIME PERIOD SIMULATED, AND (B) REPRESENTS THE TOTAL DEMAND FOR TRIP MAKING, I.E. IT ASSUMES ALL TRIPS INCUR THE AVERAGE TRAVEL COSTS FOR THIS TIME PERIOD. IT THEREFORE SOMEWHAT MISREPRESENTS TRIPS COMPLETED IN THE NEXT TIME PERIOD DUE TO OVER-CAPACITY JUNCTIONS

FINAL CONVERGENCE STATISTICS AND STOPPING VALUES

3	GE	10	- NUMBER OF ITERATIONS
0.00			- % DELTA (ACTUAL COSTS LESS MINIMUM COSTS)
0.00	LT	0.05	- % OF NEW A-O-N LOAD USED
0.00	LT	0.20	- % UNCERTAINTY IN THE OBJ. FUNCTION (RELATIVE TO THE OBJECTIVE FUNCTION)
22.64	LT	0.05	- REDUCTION IN THE UNCERTAINTY (RELATIVE TO THE UNCERTAINTY)
0.00			- % REDUCTION IN THE OBJ. FUNCTION (RELATIVE TO THE OBJECTIVE FUNCTION)

PERCENTAGE INCREASE OF CONGESTED TRAVEL TIMES OVER FREE FLOW - EPSILON-2 - = 87.04

ABSOLUTE FRACTIONS OF TRIPS ASSIGNED TO EACH ITERATION

ITERATION	FRACTION
1	0.4450
2	0.5550
3	0.0000

SINCE THIS IS ASSIGNMENT NUMBER 9
IN THE ASSIGNMENT-SIMULATION LOOPS AND GREATER THAN 2
THE OUTPUT FLOWS ARE THE AVERAGE OF THE PREVIOUS (INPUT) FLOWS AND THE CURRENT ASSIGNED FLOWS

100.0 % OF THE ASSIGNED FLOWS ARE WITHIN
5% OF THEIR PREVIOUS VALUES - THE CRITICAL VALUE,
ISTOP, IS 90 %

RANDBURG INNER CORE CBD, 2ND NETWORK-ORIGINAL SMALL NET.-21/5/ PAGE 7

LISTING OF THE FLOWS ASSIGNED TO THE SELECTED LINKS

N.B. THE ASSIGNED FLOWS ARE TOTAL FLOWS INCLUDING FIXED FLOWS

LINK NO.	ANODE	BNODE	CNODE	ASSIGNED FLOW	TARGET COUNT	DIFFERENCE (PCU/HR.)	%DIFF.
1	212	160	0	27.0	31.	4.0	12.90
2	160	212	0	38.0	43.	4.9	11.42
3	213	150	0	47.0	59.	12.0	20.34
4	150	213	0	50.0	57.	7.5	13.02
5	214	161	0	228.0	169.	-59.0	-34.91
6	161	214	0	239.0	265.	26.1	9.84
7	215	163	0	267.4	269.	1.6	0.58
8	163	215	0	86.0	80.	-6.0	-7.50
9	216	164	0	204.0	89.	-115.0	-129.21
10	164	216	0	0.0	44.	44.0	100.00
11	217	162	0	98.6	161.	62.4	38.79
12	162	217	0	97.0	71.	-26.3	-37.21
13	218	165	0	179.0	116.	-63.0	-54.31
14	165	218	0	75.0	35.	-39.9	-113.76
15	200	166	0	199.0	199.	0.0	0.00
16	166	200	0	130.0	130.	0.0	0.00
17	200	219	0	130.0	130.	0.0	0.00
18	219	200	0	199.0	199.	0.0	

0.00						
19	220	167	0	71.0	104.	33.0
31.73						
20	167	220	0	65.0	116.	50.7
43.82						
21	221	168	0	152.0	131.	-21.0
-16.03						
22	168	221	0	70.0	69.	-1.3
-1.94						
23	222	169	0	128.0	41.	-87.0
-212.20						
24	169	222	0	166.0	203.	37.3
18.37						
25	223	169	0	257.0	240.	-17.0
-7.08						
26	169	223	0	174.0	192.	18.3
9.53						
27	224	170	0	126.0	109.	-17.0
-15.60						
28	170	224	0	111.0	119.	8.2
6.90						
29	225	171	0	230.0	215.	-15.0
-6.98						
30	171	225	0	151.0	164.	13.0
7.93						
31	226	172	0	258.0	324.	66.0
20.37						
32	172	226	0	91.0	64.	-26.6
-41.40						
33	154	33	0	675.0	460.	-215.5
-46.88						
34	36	171	0	752.0	752.	0.0
0.00						
35	154	155	0	297.0	317.	20.0
6.30						
36	155	154	0	175.0	150.	-25.0
-16.67						
37	165	152	0	361.0	397.	36.5
9.18						
38	152	165	0	110.0	97.	-13.0
-13.40						
39	160	34	0	1017.0	1063.	45.8
4.31						
40	165	151	163	106.0	105.	-1.0
-0.95						
41	165	151	167	71.0	14.	-57.0
-407.14						
42	31	151	165	24.0	58.	34.0
58.62						
43	31	151	167	331.0	295.	-36.0
-12.20						
44	31	151	163	98.0	47.	-51.0

-108.51						
45	163	151	165	300.0	280.	-20.1
-7.18						
46	163	151	167	211.0	142.	-69.0
-48.56						
47	163	150	160	232.4	159.	-73.4
-46.19						
48	162	150	160	748.6	756.	7.3
0.96						
49	162	150	163	358.0	296.	-62.1
-20.97						
50	169	35	161	1166.0	816.	-350.0
-42.89						
51	172	153	170	386.0	246.	-139.6
-56.67						
52	171	153	172	111.0	86.	-25.0
-29.07						
53	171	153	170	720.0	716.	-4.0
-0.56						
54	172	154	33	186.0	264.	78.0
29.55						
55	172	154	155	183.0	221.	38.0
17.19						
56	168	154	172	328.0	119.	-209.0
-175.72						
57	168	154	33	463.0	447.	-16.4
-3.67						
58	168	154	155	114.0	71.	-43.4
-61.54						
59	155	154	172	149.0	108.	-41.0
-37.96						
60	155	154	33	26.0	26.	0.0
0.00						
61	164	32	168	823.0	527.	-295.9
-56.13						

COMPARISON OF THE ASSIGNED (SET 1) AND TARGET FLOWS (SET 2):

TOTAL NUMBER OF ELEMENTS CONSIDERED 61

STATISTIC	SET 1	SET 2	DIFFERENCE
NUMBER OF ZEROS OR NEGATIVES	1	0	
SUM OF ELEMENTS	14866.	13273.	1593.
AVERAGE ELEMENT	243.70	217.59	26.11

STANDARD DEVIATION	243.34	214.88
28.46		
COEFFICIENT OF VARIATION	0.9985	0.9875
0.0109		

REGRESSION OF SET 2 ELEMENTS (Y) AGAINST SET 1 (X)

EQUATION	A	B	R-SQUARED
Y = A + BX	13.089	0.839	0.9030
STANDARD ERRORS -	17.550	0.051	
Y = BX		0.866	0.9011
Y = X			0.8550

RANDBURG INNER CORE CBD, 2ND NETWORK-ORIGINAL SMALL NET.-21/5/ PAGE 8

DISTRIBUTION OF RATIOS OF SET 2 ELEMENTS
RELATIVE TO SET 1 ELEMENTS

RANGE	NUMBER	PER CENT	CUMULATIVE
0.15 - 0.20	1	1.64	1.64
0.20 - 0.25	0	0.00	1.64
0.25 - 0.30	0	0.00	1.64
0.30 - 0.35	1	1.64	3.28
0.35 - 0.40	1	1.64	4.92
0.40 - 0.45	1	1.64	6.56
0.45 - 0.50	2	3.28	9.84
0.50 - 0.55	0	0.00	9.84
0.55 - 0.60	0	0.00	9.84
0.60 - 0.65	4	6.56	16.39
0.65 - 0.70	4	6.56	22.95
0.70 - 0.75	4	6.56	29.51
0.75 - 0.80	1	1.64	31.15
0.80 - 0.85	1	1.64	32.79
0.85 - 0.90	5	8.20	40.98
0.90 - 0.95	4	6.56	47.54
0.95 - 1.00	4	6.56	54.10
IDENTICAL	6	9.84	63.93
1.00 - 1.05	3	4.92	68.85
1.05 - 1.10	3	4.92	73.77
1.10 - 1.15	6	9.84	83.61
1.15 - 1.20	0	0.00	83.61
1.20 - 1.25	2	3.28	86.89
1.25 - 1.30	2	3.28	90.16
1.30 - 1.35	0	0.00	90.16
1.35 - 1.40	0	0.00	90.16
1.40 - 1.45	1	1.64	91.80
1.45 - 1.50	1	1.64	93.44
1.50 - 1.55	0	0.00	93.44
1.55 - 1.60	0	0.00	93.44
1.60 - 1.65	1	1.64	95.08
1.65 - 1.70	0	0.00	95.08
1.70 - 1.75	0	0.00	95.08
1.75 - 1.80	1	1.64	96.72
1.80 - 1.85	0	0.00	96.72
1.85 - 1.90	0	0.00	96.72
1.90 - 1.95	0	0.00	96.72
1.95 - 2.00	0	0.00	96.72
ABOVE 2.0	1	1.64	98.36

INFINITY	1	1.64	100.00

MEAN OF (V2 - V1)/V1 = -0.053
MEAN ABSOLUTE VALUE OF (V2 - V1)/V1 = 0.240
STANDARD DEVIATION OF (V2 - V1)/V1 = 0.352

RANDBURG INNER CORE CBD, 2ND NETWORK-ORIGINAL SMALL NET.-21/5/ PAGE 9

DISTRIBUTION OF THE GEH ERROR STATISTIC SQRT((V2 - V1)**2/0.5(V1+V2))
(SEE SECTION XV-4 OF SATURN DOCUMENT.)

RANGE		NUMBER	PER CENT	CUMULATIVE
ZERO		6	9.84	9.84
0 -	2	25	40.98	50.82
2 -	4	10	16.39	67.21
4 -	6	11	18.03	85.25
6 -	8	1	1.64	86.89
8 -	10	5	8.20	95.08
10 -	12	2	3.28	98.36
12 -	14	1	1.64	100.00

THE SUM OF THE ERROR STATISTICS = 0.203E+03
AN AVERAGE OF 3.33 PER LINK

SUM OF GEH**2 (APPROX = CHI SQUARE) = 0.136E+04
ROOT MEAN SQUARED ERROR STATISTIC = 4.73

RANDBURG INNER CORE CBD, 2ND NETWORK-ORIGINAL SMALL NET.-21/5/ PAGE 10

DISTRIBUTION OF DIFFERENCES (V2 - V1)

RANGE		NUMBER	PER CENT	CUMULATIVE
BELOW		4	6.56	6.56
-200 -	-190	0	0.00	6.56
-190 -	-180	0	0.00	6.56
-180 -	-170	0	0.00	6.56
-170 -	-160	0	0.00	6.56
-160 -	-150	0	0.00	6.56
-150 -	-140	0	0.00	6.56
-140 -	-130	1	1.64	8.20
-130 -	-120	0	0.00	8.20
-120 -	-110	1	1.64	9.84
-110 -	-100	0	0.00	9.84
-100 -	-90	0	0.00	9.84
-90 -	-80	1	1.64	11.48
-80 -	-70	1	1.64	13.11
-70 -	-60	3	4.92	18.03
-60 -	-50	3	4.92	22.95
-50 -	-40	2	3.28	26.23
-40 -	-30	2	3.28	29.51
-30 -	-20	6	9.84	39.34
-20 -	-10	5	8.20	47.54
-10 -	0	4	6.56	54.10
ZERO		6	9.84	63.93
0 -	10	6	9.84	73.77
10 -	20	4	6.56	80.33
20 -	30	1	1.64	81.97
30 -	40	5	8.20	90.16
40 -	50	2	3.28	93.44
50 -	60	1	1.64	95.08
60 -	70	2	3.28	98.36
70 -	80	1	1.64	100.00

AVERAGE ABSOLUTE DIFFERENCE = 47.38
RELATIVE TO THE AVERAGE SET 1 ELEMENT = 19.442 PER CENT

RANGE OF DIFFERENCES: -350.0 TO 78.0
TOTAL RANGE = 428.0

STANDARD DEVIATION OF DIFFERENCES = 81.81

RELATIVE TO THE AVERAGE SET 1 ELEMENT = 33.571 PER CENT

```
**************************************

  NORMAL COMPLETION OF PROGRAM S2

THERE HAVE BEEN     0 NON-FATAL ERRORS
                    0 SERIOUS WARNINGS
                    1 WARNINGS.

   CPU TIME =       18.23 SECONDS

TOTAL CPU TIME TO DATE =   7 MINS    0.69
SECONDS

        COMPLETION CODE -  0

**************************************
```

THE SATURN SUITE OF PROGRAMS

PROGRAM S3 -7.1 SATURN SIMULATION PROGRAM SATSIM

DATE 25/ 1/80 TIME 4:26: 9

THE INPUT SATURN FILE IS READ FROM CHANNEL 1

HEADER DATA FROM THE MAG TAPE FILE READ FROM CHANNEL 1

RUN NAME RANDBURG INNER CORE CBD, 2ND NETWORK-ORIGINAL SMALL NET.-21/5/89
CREATED BY PROGRAM S2
DATE AND TIME OF CREATION 25/ 1/80 4/25/42

LISTING OF THE PARAMETERS USED

TITLE =	F	PRSFD =	F	NOTUP =	0
MODET =	1	MASL =	8	NITS =	10
ISTOP =	90	LRTP =	0	NOPD =	0
TDEL =	3.00	CAPMIN =	10.	ALEX =	5.75

OUTPUT FROM SATSIM (SATURN SIMULATION)
SIMULATION RUN NUMBER 10

ITERATION 1 - AVER. ABS. CHANGE = 1.14766 PCU/HR
NO LINKS BLOCKING BACK

ITERATION 2 - AVER. ABS. CHANGE = 0.00619 PCU/HR
NO LINKS BLOCKING BACK

**** - WARNING - **** LINK 214 161
THE AVERAGE QUEUE OF 27.3 VEHICLES EXCEEDS
THE STACKING CAPACITY 3.5
BUT NO BLOCKING BACK CAN BE APPLIED SINCE 214 IS A - EXTERNAL NODE

**** - WARNING - **** LINK 223 169

```
     THE AVERAGE QUEUE OF     24.5 VEHICLES EXCEEDS
     THE STACKING CAPACITY     3.5
     BUT NO BLOCKING BACK CAN BE APPLIED SINCE    223 IS A -
          EXTERNAL NODE

ITERATION    3 - AVER. ABS. CHANGE =        0.00277 PCU/HR
NO LINKS BLOCKING BACK

ITERATION    4 - AVER. ABS. CHANGE =        0.00053 PCU/HR
```

RANDBURG INNER CORE CBD, 2ND NETWORK-ORIGINAL SMALL NET.-21/5/ PAGE 2

SATURN SIMULATION SUMMARY RESULTS

NOTE THAT THE FOLLOWING STATISTICS ARE GIVEN AS RATES E.G., PCU.HRS/HR AS OPPOSED TO THE PCU.HRS OF TRAVEL TIME DURING THE TIME PERIOD SIMULATED. TO OBTAIN THE LATTER SIMPLY MULTIPLY THE FIGURES GIVEN BY THE LENGTH OF THE TIME PERIOD, LTP.

NOTE AS WELL THAT FREE-RUN-TIME IS TRAVEL TIME ON LINKS, DELAYED TIME IS TIME SPENT AT INTERSECTIONS AND THAT QUEUED TIME REFERS TO THE ADDITIONAL TIME SPENT QUEUING AT INTERSECTIONS WHICH ARE OVER CAPACITY.

FINALLY NOTE THAT THE FIGURES ONLY INCLUDE TRAVEL IN THE TIME PERIOD SIMULATED. THE EXTRA TRAVEL TIME AND DISTANCE IN LATER PERIODS DUE TO VEHICLES QUEUED AT OVER-CAPACITY INTERSECTIONS ARE NOT INCLUDED.

TOTAL DELAYED TIME	=	25.8 PCU. HRS./HR.
TOTAL QUEUED TIME	=	41.8 PCU. HRS./HR.
TOTAL FREE RUN TIME	=	59.5 PCU. HRS./HR.
TOTAL TRAVEL TIME	=	127.1 PCU. HRS./HR.
TOTAL TRAVEL DISTANCE	=	1709.7 PCU. KMS./HR.
OVERALL AVERAGE SPEED	=	13.5 KPH

FUEL CONSUMPTION SATISTICS

FUEL CONSUMPTION IS ESTIMATED USING THE FOLLOWING EQUATION

TFC = A*TTD + B*TDT + C*S1 + D*S2

WHERE TFC = FUEL CONSUMPTION IN LITRES PER HOUR
TTD = TOTAL TRAVEL DISTANCE PER HOUR
A = 0.07 LITRES/KM.
TDT = TOTAL DELAYED TIME (IDLING) PER HOUR
B = 1.2 LITRES/HR.
S1 = NUMBER OF PRIMARY STOPS AT INTERSECTIONS
C = 0.016 LITRES PER PRIMARY STOP
S2 = NUMBER OF SECOND STOPS AT INTERSECTIONS
D = 0.005 LITRES PER SECOND STOP

TOTAL NUMBER OF PRIMARY STOPS/HOUR = 3858.2

TOTAL NUMBER OF SECOND STOPS/HOUR = 8827.6

TOTAL NUMBER OF STOPS/HOUR = 12685.8

RATE OF FUEL CONSUMPTION = 306.6 LITRES/HOUR

FUEL CONSUMED DURING TIME PERIOD = 306.6 LITRES

****** - END OF SIMULATION-ASSIGNMENT LOOPS - ******

EITHER THE NUMBER OF ITERATIONS, 10 HAS REACHED THE MAXIMUM, 8
OR THE PER CENT OF ASSIGNMENT LINKS CHANGING BY LESS THAN 5%, 100.0% EXCEEDS 90%.

****

NORMAL COMPLETION OF PROGRAM S3

THERE HAVE BEEN 0 NON-FATAL ERRORS
0 SERIOUS WARNINGS
2 WARNINGS.

CPU TIME = 28.08 SECONDS

TOTAL CPU TIME TO DATE = 8 MINS 12.14 SECONDS

COMPLETION CODE - 2

****

APPENDIX J

Specimen of SATME2 output file for Run No.4
(only 1st and 10th iteration are presented)

THE SATURN SUITE OF PROGRAMS

PROGRAM S9 -7.1 SATME2 - O-D MATRIX FROM FLOWS

RUN NAME RANDBURG SMALL NET.-ME2-NO PRIOR MAT.- 3/6/89

DATE 22/ 2/80 TIME 20: 3:31

LISTING OF THE PARAMETER VALUES EITHER INPUT ON &PARAM OR TAKEN AS DEFAULT -

PRIOR	=	F	PRINT	=	T	ODSUMS	= T
SUBFIX	=	T	INFIT	=	T		
EPSILN	=	0.10	SEED	=	0.00	XAMAX	= 20.00
ITERMX	=	10	MODET	=	-1		

READ THE PIJA FACTORS FROM CHANNEL 3

NUMBER OF COUNTS READ = 61
NUMBER OF O-D ZONES = 17

LISTING OF THE INPUT COUNT DATA IN PCU/HR

NOTE THAT ANY FIXED FLOWS ON LINKS (E.G., BUS FLOWS) ARE SUBTRACTED FROM THE OBSERVED COUNTS SO THAT THE MODEL TRIES TO PRODUCE A TRIP MATRIX TO ACCOUNT FOR THE REMAINING OR RESIDUAL TRIPS.

NO.	ANODE	BNODE	CNODE	FLOW	FIXED	RESID.
1	212	160	0	31.	0.	31.
2	160	212	0	41.	0.	41.
3	213	150	0	59.	0.	59.
4	150	213	0	54.	0.	54.
5	214	161	0	169.	0.	169.
6	161	214	0	256.	0.	256.
7	215	163	0	269.	0.	269.
8	163	215	0	80.	0.	80.
9	216	164	0	89.	0.	89.
10	164	216	0	44.	0.	44.
11	217	162	0	161.	0.	161.
12	162	217	0	66.	0.	66.
13	218	165	0	116.	0.	116.
14	165	218	0	34.	0.	34.
15	200	166	0	199.	0.	199.
16	166	200	0	130.	0.	130.
17	200	219	0	130.	0.	130.
18	219	200	0	199.	0.	199.
19	220	167	0	104.	0.	104.
20	167	220	0	114.	0.	114.
21	221	168	0	131.	0.	131.
22	168	221	0	68.	0.	68.
23	222	169	0	41.	0.	41.
24	169	222	0	203.	0.	203.
25	223	169	0	240.	0.	240.
26	169	223	0	192.	0.	192.
27	224	170	0	109.	0.	109.
28	170	224	0	119.	0.	119.
29	225	171	0	215.	0.	215.
30	171	225	0	164.	0.	164.
31	226	172	0	324.	0.	324.
32	172	226	0	64.	0.	64.

33	154	33	0	457.	0.	457.
34	36	171	0	752.	0.	752.
35	154	155	0	316.	0.	316.
36	155	154	0	150.	0.	150.
37	165	152	0	386.	0.	386.
38	152	165	0	97.	0.	97.
39	160	34	0	1018.	0.	1018.
40	165	151	163	105.	0.	105.
41	165	151	167	14.	0.	14.
42	31	151	165	58.	0.	58.
43	31	151	167	295.	0.	295.
44	31	151	163	47.	0.	47.
45	163	151	165	268.	0.	268.
46	163	151	167	136.	0.	136.
47	163	150	160	159.	0.	159.
48	162	150	160	711.	0.	711.
49	162	150	163	279.	0.	279.
50	169	35	161	788.	0.	788.
51	172	153	170	245.	0.	245.
52	171	153	172	86.	0.	86.
53	171	153	170	716.	0.	716.
54	172	154	33	264.	0.	264.
55	172	154	155	221.	0.	221.
56	168	154	172	118.	0.	118.
57	168	154	33	443.	0.	443.
58	168	154	155	70.	0.	70.
59	155	154	172	108.	0.	108.
60	155	154	33	26.	0.	26.
61	164	32	168	522.	0.	522.

ODSUMS = TRUE

THE FOLLOWING ROW (ORIGIN) AND COLUMN (DESTINATION) CONSTRAINTS ARE READ IN:

1	752
-1	0
2	0
2	-686
3	0
3	-1017
4	466
-4	0
5	110
5	-386
6	130

25×17

```
 6      -199
 7       175
 7      -309
12        52
12       -38
13        87
13       -50
14       228
14      -256
15       570
15      -183
16       449
16      -270
17       152
17       -70
18       386
18      -257
19       257
19      -174
20       126
20      -111
21       230
21      -164

THE TRIP TOTALS FOR   17 ORIGINS AND   17 DESTINATIONS
HAVE BEEN READ IN. THEIR
(PARTIAL) SUMS ARE        4170 AND        4170 RESPECTIVELY.


                PRIOR = FALSE - NO INPUT TRIP MATRIX

     WE THEREFORE ASSUME A STARTING MATRIX WITH   17 ZONES
     AND A UNIFORM TIJ VALUE =      18.714
     APART FROM     77 ZONE PAIRS WHICH DO NOT USE
     ANY OF THE COUNTED LINKS AND ARE THEREFORE SET TO ZERO.

     WE ALSO ASSUME THE MATRIX ELEMENTS TO BE TRIPS      IN
UNITS OF PCU / HR
```

RANDBURG SMALL NET.-ME2-NO PRIOR MAT.- 3/6/89
PAGE 3

ITERATION NUMBER 1

COUNT NO	OBSERVED FLOW	ESTIMATED BEFORE	OBS/EST BEFORE		XA AFTER	ESTIMATED PIJA	AVERAGE NO OF PAIRS
1	31.0	18.7	1.656	1.656	31.0	1.000	1
2	41.1	243.3	0.169	0.169	41.1	1.000	13
3	59.0	21.9	2.697	2.697	59.0	1.000	2
4	54.1	224.6	0.241	0.241	54.1	1.000	12
5	169.0	194.8	0.868	0.868	169.0	1.000	12
6	256.2	205.9	1.244	1.244	256.2	1.000	11
7	269.0	49.0	5.491	5.491	234.0	0.918	4
7	269.0	234.0	1.150	6.392	270.1	0.944	4
8	80.0	37.4	2.137	2.137	80.0	1.000	2
9	89.0	136.9	0.650	0.650	89.3	0.992	8
10	44.0	18.7	2.352	2.352	44.0	1.000	1
11	161.0	30.3	5.314	5.314	69.6	0.498	3
11	161.0	69.6	2.315	20.000	136.2	0.507	3
12	66.1	147.2	0.449	0.449	66.1	1.000	8
13	116.0	40.6	2.858	2.858	116.0	1.000	3
14	34.0	285.6	0.119	0.119	34.0	1.000	10
15	199.0	18.7	10.633	10.633	199.0	1.000	1
16	130.0	18.7	6.946	6.946	130.0	1.000	1
17	130.0	130.0	1.000	1.000	130.0	1.000	1

18	199.0	199.0	1.000	1.000	199.0	1.000
19 1 9	104.0	184.1	0.565	0.565	104.0	1.000
20 1	114.1	18.7	6.095	6.095	114.1	1.000
21 12	131.0	172.6	0.759	0.759	131.0	1.000
22 11	68.0	188.7	0.360	0.360	68.0	1.000
23 8	41.0	85.8	0.478	0.478	41.0	1.000
24 3	203.1	56.1	3.617	3.617	203.1	1.000
25 12	240.0	160.6	1.494	1.494	240.0	1.000
26 11	192.1	184.2	1.043	1.043	192.1	1.000
27 12	109.0	210.4	0.518	0.518	109.0	1.000
28 11	119.0	193.4	0.615	0.615	119.0	1.000
29 13	215.0	221.9	0.969	0.969	215.0	1.000
30 1	164.0	18.7	8.763	8.763	164.0	1.000
31 4	324.0	68.5	4.733	4.733	324.0	1.000
32 8	64.0	137.3	0.466	0.466	64.0	1.000
33 12	457.1	272.4	1.678	1.678	457.1	1.000
34 14	752.0	398.6	1.887	1.887	752.0	1.000
35 11	316.0	270.3	1.169	1.169	316.0	1.000
36 12	150.0	156.9	0.956	0.956	150.0	1.000
37 11	386.3	340.2	1.136	1.136	386.3	1.000
38 12	97.0	191.7	0.506	0.506	97.0	1.000
39 14	1018.4	516.3	1.972	1.972	1018.4	1.000
40 5	105.0	155.0	0.677	0.677	105.0	1.000
41 8	14.0	64.6	0.217	0.217	14.0	1.000
42 1	58.0	21.3	2.729	2.729	58.0	1.000
43 9	295.0	241.6	1.221	1.221	295.0	1.000

44 3	47.0	80.1	0.587	0.587	47.0	1.000
45 18	268.3	336.3	0.798	0.798	268.3	1.000
46 18	136.2	266.5	0.511	0.511	136.2	1.000
47 8	159.0	346.6	0.459	0.459	206.2	0.666
47 8	159.0	206.2	0.771	0.311	160.6	0.641
48 18	711.3	429.1	1.658	1.658	668.0	0.876
49 34	278.5	284.7	0.978	0.978	278.5	1.000
50 69	788.3	1021.5	0.772	0.772	789.8	0.993
51 40	245.0	523.0	0.468	0.468	248.0	0.984
52 4	86.0	152.2	0.565	0.565	86.0	1.000
53 22	716.0	555.9	1.288	1.288	716.0	1.000
54 3	264.0	199.3	1.325	1.325	264.0	1.000
55 3	221.0	138.9	1.591	1.591	221.0	1.000
56 35	118.0	160.0	0.738	0.738	119.3	0.965
57 8	443.1	141.8	3.126	3.126	443.1	1.000
58 8	70.0	98.8	0.709	0.709	70.0	1.000
59 11	108.0	65.2	1.656	1.656	108.0	1.000
60 1	26.0	30.0	0.866	0.866	26.0	1.000
61 50	522.2	546.7	0.955	0.955	522.4	0.991

RANDBURG SMALL NET.-ME2-NO PRIOR MAT.- 3/6/89
PAGE 4

BALANCING FACTORS FOR THE ORIGINS AND DESTINATIONS

ZONE	OBSERVED FLOW	ESTIMATED (BEFORE)	DIFFERENCE	%DIFF.
1 (ORIGIN)	752.0	882.4	130.4	17.337
2 (DEST.)	686.0	766.1	80.1	0.117
3 (DEST.)	1017.0	863.4	-153.6	-0.151
4 (ORIGIN)	466.0	423.7	-42.3	-9.069
5 (ORIGIN)	110.0	71.3	-38.7	-35.138
5 (DEST.)	386.0	390.7	4.7	0.012
6 (ORIGIN)	130.0	374.4	244.4	188.028
6 (DEST.)	199.0	451.5	252.5	1.269
7 (ORIGIN)	175.0	164.3	-10.7	-6.129
7 (DEST.)	309.0	329.5	20.5	0.066
8 (ORIGIN)	52.0	301.5	249.5	479.805
8 (DEST.)	38.0	74.0	36.0	0.947
9 (ORIGIN)	87.0	332.4	245.4	282.094
9 (DEST.)	50.0	62.0	12.0	0.240
10 (ORIGIN)	228.0	170.3	-57.7	-25.300
10 (DEST.)	256.0	154.1	-101.9	-0.398
11 (ORIGIN)	570.0	585.7	15.7	2.761
11 (DEST.)	183.0	140.7	-42.3	-0.231
12 (ORIGIN)	449.0	300.1	-148.9	-33.154
12 (DEST.)	270.0	230.4	-39.6	-0.147
13 (ORIGIN)	152.0	147.4	-4.6	-3.038
13 (DEST.)	70.0	54.0	-16.0	-0.228
14 (ORIGIN)	386.0	482.1	96.1	24.905
14 (DEST.)	257.0	319.6	62.6	0.244
15 (ORIGIN)	257.0	262.0	5.0	1.954
15 (DEST.)	174.0	167.9	-6.1	-0.035
16 (ORIGIN)	126.0	145.4	19.4	15.397
16 (DEST.)	111.0	101.2	-9.8	-0.088
17 (ORIGIN)	230.0	300.5	70.5	30.655
17 (DEST.)	164.0	487.8	323.8	1.974

RANDBURG SMALL NET.-ME2-NO PRIOR MAT.- 3/6/89
PAGE 5

ITERATION NUMBER 10

COUNT AVERAGE NO	OBSERVED NO OF FLOW PAIRS	ESTIMATED BEFORE	OBS/EST BEFORE		XA AFTER	ESTIMATED PIJA
1	31.0	35.1	0.884	1.956	31.0	1.000
2	41.1	36.6	1.121	0.619	41.1	1.000
3	59.0	66.3	0.891	2.717	59.0	1.000
4	54.1	46.3	1.169	1.111	54.1	1.000
5	169.0	222.1	0.761	0.091	169.0	1.000
6	256.2	241.2	1.062	2.330	256.2	1.000
7	269.0	297.7	0.903	1.515	269.0	0.719
8	80.0	78.1	1.024	1.215	80.0	1.000
9	89.0	94.7	0.940	0.498	89.0	0.922
10	44.0	42.0	1.047	5.589	44.0	1.000
11	161.0	168.8	0.954	14.990	161.0	0.493
12	66.1	59.1	1.118	3.655	66.1	1.000
13	116.0	136.4	0.850	0.557	116.0	1.000
14	34.0	33.0	1.031	0.150	34.0	1.000
15	199.0	179.4	1.109	20.000	179.4	1.000
16	130.0	122.4	1.062	20.000	122.4	1.000
17	130.0	122.4	1.062	3.794	130.0	1.000
18	199.0	179.4	1.109	1.961	199.0	1.000
19	104.0	122.9	0.846	0.092	104.0	1.000

20	114.1	108.6	1.051	2.686	114.1	1.000
1						
21	131.0	142.3	0.920	0.393	131.0	1.000
12						
22	68.0	65.7	1.035	1.062	68.0	1.000
11						
23	41.0	42.0	0.976	0.710	41.0	1.000
8						
24	203.1	203.0	1.001	4.205	203.0	1.000
3						
25	240.0	255.1	0.941	0.866	240.0	1.000
12						
26	192.1	174.6	1.100	3.427	192.1	1.000
11						
27	109.0	119.8	0.910	0.211	109.0	1.000
12						
28	119.0	109.7	1.085	2.020	119.0	1.000
11						
29	215.0	235.4	0.913	0.385	215.0	1.000
13						
30	164.0	106.6	1.538	20.000	106.6	1.000
1						
31	324.0	342.1	0.947	2.572	324.0	1.000
4						
32	64.0	56.8	1.127	2.793	64.0	1.000
8						
33	457.1	648.3	0.705	0.085	457.1	1.000
12						
34	752.0	778.1	0.966	1.445	752.0	1.000
14						
35	316.0	296.5	1.066	5.382	316.0	1.000
11						
36	150.0	155.5	0.965	0.430	150.0	1.000
12						
37	386.3	341.4	1.132	3.483	386.3	1.000
11						
38	97.0	107.3	0.904	1.435	97.0	1.0
12						
39	1018.4	903.6	1.127	6.006	1018.4	1.0
14						
40	105.0	107.7	0.975	0.933	105.0	1.000
5						
41	14.0	15.9	0.882	0.050	15.9	1.000
8						
42	58.0	63.4	0.914	0.752	58.0	1.000
1						
43	295.0	327.5	0.901	0.726	295.0	1.000
9						
44	47.0	52.5	0.895	0.719	47.0	1.000
3						
45	268.3	247.6	1.084	2.005	268.3	1.000
18						

46	136.2	129.6	1.051	1.473	136.2	1.000
18						
47	159.0	255.6	0.622	0.050	255.6	0.624
8						
48	711.3	694.9	1.024	1.898	711.3	0.883
18						
49	278.5	275.2	1.012	1.515	278.5	1.000
34						
50	788.3	985.0	0.800	0.094	788.3	0.993
69						
51	245.0	220.4	1.112	0.870	245.0	0.973
40						
52	86.0	89.2	0.964	0.171	86.0	1.000
4						
53	716.0	723.9	0.989	1.480	716.0	1.000
22						
54	264.0	108.8	2.427	20.000	108.8	1.000
3						
55	221.0	233.1	0.948	1.374	221.0	1.000
3						
56	118.0	131.3	0.899	0.242	118.0	0.950
35						
57	443.1	301.7	1.469	20.000	301.7	1.000
8						
58	70.0	76.5	0.916	0.157	70.0	1.000
8						
59	108.0	124.9	0.865	0.425	108.0	1.000
11						
60	26.0	27.0	0.962	5.084	26.0	1.000
1						
61	522.2	445.6	1.172	1.471	522.2	0.987
50						

BALANCING FACTORS FOR THE ORIGINS AND DESTINATIONS

ZONE	OBSERVED FLOW	ESTIMATED (BEFORE)	DIFFERENCE	%DIFF.
1 (ORIGIN)	752.0	708.4	-43.6	-5.803
2 (DEST.)	686.0	488.0	-198.0	-0.289
3 (DEST.)	1017.0	951.6	-65.4	-0.064
4 (ORIGIN)	466.0	484.8	18.8	4.036
5 (ORIGIN)	110.0	112.7	2.7	2.498
5 (DEST.)	386.0	381.4	-4.6	-0.012
6 (ORIGIN)	130.0	150.1	20.1	15.475
6 (DEST.)	199.0	223.2	24.2	0.121
7 (ORIGIN)	175.0	161.3	-13.7	-7.846
7 (DEST.)	309.0	305.7	-3.3	-0.011
8 (ORIGIN)	52.0	56.4	4.4	8.466
8 (DEST.)	38.0	35.3	-2.7	-0.071
9 (ORIGIN)	87.0	94.5	7.5	8.668
9 (DEST.)	50.0	47.9	-2.1	-0.043
10 (ORIGIN)	228.0	214.8	-13.2	-5.807
10 (DEST.)	256.0	220.9	-35.1	-0.137
11 (ORIGIN)	570.0	616.7	46.7	8.185
11 (DEST.)	183.0	163.6	-19.4	-0.106
12 (ORIGIN)	449.0	442.2	-6.8	-1.521
12 (DEST.)	270.0	246.8	-23.2	-0.086
13 (ORIGIN)	152.0	138.7	-13.3	-8.757
13 (DEST.)	70.0	73.1	3.1	0.044
14 (ORIGIN)	386.0	372.9	-13.1	-3.404
14 (DEST.)	257.0	260.7	3.7	0.014
15 (ORIGIN)	257.0	239.2	-17.8	-6.935
15 (DEST.)	174.0	195.8	21.8	0.125
16 (ORIGIN)	126.0	113.6	-12.4	-9.820
16 (DEST.)	111.0	123.1	12.1	0.109
17 (ORIGIN)	230.0	204.8	-25.2	-10.946
17 (DEST.)	164.0	169.3	5.3	0.032

RANDBURG SMALL NET.-ME2-NO PRIOR MAT.- 3/6/89
PAGE 23

FIT BETWEEN THE UPDATED MATRIX AND COUNTS

COUNT NO.	NODES			ESTIMATED FLOW	INPUT COUNT	DIFFERENCE (VPH)	%DIFF. XA
1	212	160	0	34.4	31.	-3.4	-11.05 1.956
2	160	212	0	36.7	41.	4.3	10.51 0.619
3	213	150	0	65.1	59.	-6.1	-10.36 2.717
4	150	213	0	46.5	54.	7.6	14.04 1.111
5	214	161	0	21.3	169.	-52.3	-30.96 0.091
6	161	214	0	240.1	256.	16.1	6.27 2.330
7	215	163	0	296.6	269.	-27.6	-10.24 1.515
8	163	215	0	77.0	80.	3.0	3.76 1.215
9	216	164	0	93.5	89.	-4.5	-5.02 0.498
10	164	216	0	42.3	44.	1.7	3.88 5.589
11	217	162	0	176.8	161.	-15.8	-9.83 14.990
12	162	217	0	62.8	66.	3.3	4.99 3.655
13	218	165	0	135.6	116.	-19.6	-16.91 0.557
14	165	218	0	35.0	34.	-0.9	-2.75 0.150
15	200	166	0	180.2	199.	18.8	9.45 20.000
16	166	200	0	123.2	130.	6.8	5.26 20.000
17	200	219	0	123.2	130.	6.8	5.26 3.794
18	219	200	0	180.2	199.	18.8	9 45 1.961
19	220	167	0	120.8	104.	-16.8	

-16.16	0.092					
20	167	220	0	108.0	114.	6.0
5.27	2.686					
21	221	168	0	141.3	131.	-10.3
-7.86	0.393					
22	168	221	0	69.1	68.	-1.0
-1.52	1.052					
23	222	169	0	40.8	41.	0.2
0.58	0.710					
24	169	222	0	202.9	203.	0.2
0.10	4.205					
25	223	169	0	249.3	240.	-9.3
-3.89	0.866					
26	169	223	0	176.7	192.	15.4
8.01	3.427					
27	224	170	0	116.1	109.	-7.1
-6.56	0.211					
28	170	224	0	111.3	119.	7.7
6.44	2.020					
29	225	171	0	228.0	215.	-13.0
-6.06	0.385					
30	171	225	0	105.0	164.	58.0
35.38	20.000					
31	226	172	0	337.8	324.	-13.8
-4.26	2.572					
32	172	226	0	59.8	64.	4.2
6.56	2.793					
33	154	33	0	688.2	457.	-231.1
-50.56	0.085					
34	36	171	0	765.7	752.	-13.7
-1.82	1.445					
35	154	155	0	315.1	316.	0.9
0.30	5.382					
36	155	154	0	159.4	150.	-9.4
-6.24	0.430					
37	165	152	0	381.8	386.	4.5
1.16	3.483					
38	152	165	0	110.0	97.	-13.0
-13.44	1.435					
39	160	34	0	1004.3	1018.	14.1
1.39	6.006					
40	165	151	163	113.0	105.	-8.0
-7.59	0.933					
41	165	151	167	21.5	14.	-7.5
-53.92	0.050					
42	31	151	165	56.4	58.	1.6
2.73	0.752					
43	31	151	167	365.2	295.	-70.2
-23.78	0.726					
44	31	151	163	49.6	47.	-2.6
-5.58	0.719					
45	163	151	165	249.3	268.	19.1

25×

7.11	2.005					
46	163	151	167	179.1	136.	-43.0
-31.56	1.473					
47	163	150	160	260.2	159.	-101.2
-63.67	0.050					
48	162	150	160	681.3	711.	30.1
4.22	1.898					
49	162	150	163	306.5	279.	-28.0
-10.05	1.515					
50	169	35	161	939.1	788.	-150.8
-19.14	0.094					
51	172	153	170	238.0	245.	7.0
2.88	0.870					
52	171	153	172	101.9	86.	-15.9
-18.50	0.171					
53	171	153	170	785.8	716.	-69.8
-9.75	1.480					
54	172	154	33	159.9	264.	104.1
39.42	20.000					
55	172	154	155	233.6	221.	-12.6
-5.68	1.374					
56	168	154	172	131.9	118.	-13.9
-11.74	0.242					
57	168	154	33	488.6	443.	-45.5
-10.27	20.000					
58	168	154	155	81.5	70.	-11.5
-16.44	0.157					
59	155	154	172	119.7	108.	-11.7
-10.82	0.425					
60	155	154	33	39.7	26.	-13.7
-52.56	5.084					
61	164	32	168	629.8	522.	-107.6
-20.61	1.471					

UPDATED TRIP MATRIX

TOTAL TRIPS TO AND FROM EACH ZONE

ZONE	ORIGINS (FROM)			DESTINATIONS (TO)		
	OBSERVED	ESTIMATED	%DIFF	OBSERVED	ESTIMATED	%DIFF
1	752.0	767.2	-2.019	0.0	0.0	0.000
2	0.0	0.0	0.000	686.0	698.0	-1.744
3	0.0	0.0	0.000	1017.0	1006.9	0.996
4	466.0	477.7	-2.510	0.0	0.0	0.000
5	110.0	115.5	-5.038	386.0	384.1	0.484
6	130.0	141.6	-8.935	199.0	203.0	-2.021
7	175.0	174.4	0.315	309.0	318.3	-3.026
12	52.0	53.2	-2.391	38.0	37.7	0.802

13	87.0	88.6	-1.816	50.0	48.3	3.450
14	228.0	228.5	-0.201	256.0	265.0	-3.525
15	570.0	570.0	0.003	183.0	185.8	-1.510
16	449.0	447.7	0.284	270.0	270.4	-0.159
17	152.0	150.7	0.861	70.0	71.1	-1.501
18	386.0	380.5	1.432	257.0	264.7	-2.986
19	257.0	256.6	0.140	174.0	178.0	-2.298
20	126.0	125.8	0.175	111.0	112.8	-1.634
21	230.0	230.0	0.000	164.0	164.0	0.000

RANDBURG SMALL NET.-ME2-NO PRIOR MAT.- 3/6/89
PAGE 24

SUMMARY STATISTICS COMPARING THE UPDATED
FLOWS (DATA SET 1) AND THE OBSERVED FLOWS (DATA SET 2)

25 x

RANDBURG SMALL NET.-ME2-NO PRIOR MAT.- 3/6/89
PAGE 25

DISTRIBUTION OF RATIOS OF SET 2 ELEMENTS
RELATIVE TO SET 1 ELEMENTS

RANGE	NUMBER	PER CENT	CUMULATIVE
0.60 - 0.65	2	2.11	2.11
0.65 - 0.70	2	2.11	4.21
0.70 - 0.75	0	0.00	4.21
0.75 - 0.80	2	2.11	6.32
0.80 - 0.85	4	4.21	10.53
0.85 - 0.90	5	5.26	15.79
0.90 - 0.95	16	16.84	32.63
0.95 - 1.00	24	25.26	57.89
IDENTICAL	4	4.21	62.11
1.00 - 1.05	21	22.11	84.21
1.05 - 1.10	9	9.47	93.68
1.10 - 1.15	3	3.16	96.84
1.15 - 1.20	1	1.05	97.89
1.20 - 1.25	0	0.00	97.89
1.25 - 1.30	0	0.00	97.89
1.30 - 1.35	0	0.00	97.89
1.35 - 1.40	0	0.00	97.89
1.40 - 1.45	0	0.00	97.89
1.45 - 1.50	0	0.00	97.89
1.50 - 1.55	1	1.05	98.95
1.55 - 1.60	0	0.00	98.95
1.60 - 1.65	0	0.00	98.95
1.65 - 1.70	1	1.05	100.00

MEAN OF (V2 - V1)/V1 = -0.025
MEAN ABSOLUTE VALUE OF (V2 - V1)/V1 = 0.080
STANDARD DEVIATION OF (V2 - V1)/V1 = 0.137

25×10

RANDBURG SMALL NET.-ME2-NO PRIOR MAT.- 3/6/89
PAGE 26

DISTRIBUTION OF THE GEH ERROR STATISTIC SQRT((V2 - V1)**2/0.5(V1+V2))
(SEE SECTION XV-4 OF SATURN DOCUMENT.)

RANGE		NUMBER	PER CENT	CUMULATIVE
ZERO		4	4.21	4.21
0 -	2	79	83.16	87.37
2 -	4	6	6.32	93.68
4 -	6	3	3.16	96.84
6 -	8	2	2.11	98.95
8 -	10	1	1.05	100.00

THE SUM OF THE ERROR STATISTICS = 0.104E+03
AN AVERAGE OF 1.09 PER LINK

SUM OF GEH**2 (APPROX = CHI SQUARE) = 0.369E+03
ROOT MEAN SQUARED ERROR STATISTIC = 1.97

RANDBURG SMALL NET.-ME2-NO PRIOR MAT.- 3/6/89
PAGE 27

DISTRIBUTION OF DIFFERENCES (V2 - V1)

RANGE		NUMBER	PER CENT	CUMULATIVE
BELOW		1	1.05	1.05
-200 -	-190	0	0.00	1.05
-190 -	-180	0	0.00	1.05
-180 -	-170	0	0.00	1.05
-170 -	-160	0	0.00	1.05
-160 -	-150	1	1.05	2.11
-150 -	-140	0	0.00	2.11
-140 -	-130	0	0.00	2.11
-130 -	-120	0	0.00	2.11
-120 -	-110	0	0.00	2.11
-110 -	-100	2	2.11	4.21
-100 -	-90	0	0.00	4.21
-90 -	-80	0	0.00	4.21
-80 -	-70	1	1.05	5.26
-70 -	-60	1	1.05	6.32
-60 -	-50	1	1.05	7.37
-50 -	-40	2	2.11	9.47
-40 -	-30	0	0.00	9.47
-30 -	-20	2	2.11	11.58
-20 -	-10	18	18.95	30.53
-10 -	0	26	27.37	57.89
ZERO		4	4.21	62.11
0 -	10	26	27.37	89.47
10 -	20	7	7.37	96.84
20 -	30	0	0.00	96.84
30 -	40	1	1.05	97.89
40 -	50	0	0.00	97.89
50 -	60	1	1.05	98.95
60 -	70	0	0.00	98.95
70 -	80	0	0.00	98.95
80 -	90	0	0.00	98.95
90 -	100	0	0.00	98.95
100 -	110	1	1.05	100.00

HEADER RECORD DATA FOR THE MATRIX WRITTEN TO CHANNEL 2

MATRIX TITLE - UPDATED RANDBURG SMALL NET. TRIP MAT.-ME2-NO PRIOR MAT
MATRIX SIZE - 17 ROWS 17 COLUMNS

TYPE OF ELEMENTS (MTYPE) = 3
ELEMENT DIMENSIONS - TRIPS
ELEMENT UNITS - PCU / HR*10** 0

FILE ELEMENTS ARE WRITTEN AS REALS

APPENDIX K

GEH Test - GWBASIC Program

```
1     'PROGRAMME GEH.BAS
2     'RELEASE 1.0
3     'J.ARON Pr.Eng.  - 4/C/1989
10    PRINT "WELCOME TO GEH STATISTIC TEST"
20    PRINT "The programme compares two arrays V1 and V2, Observed vs Estimated"
25    PRINT "The user may decide which array is Observed and which is Estimated"
30    PRINT "The input is interactive"
40    INPUT "ENTER NUMBER OF PAIR VALUES"; N
50    DIM V1(N)
55    DIM V2(N)
60    LET Y=0: LET X=0:
70    PRINT "START TO INPUT VALUES"
80    FOR I=1 TO N
90    PRINT "V1";I;"=";:INPUT V1(I)
100   PRINT "V2";I;"=";:INPUT V2(I)
110   LET X=((((V1(I)-V2(I))^2)/(.5*(V1(I)+V2(I))))^.5
120   LET Y=Y+X
130   NEXT I
140   LET GEH=Y/N
150   PRINT "GEH=";USING "###.###";GEH
160   INPUT "DO YOU WISH TO PRINT INPUT VALUES AND RESULT(Y/N), IF 'YES' PRINTER
MUST BE ON-LINE";B$
170   IF B$="Y" THEN GOTO 190
180   GOTO 230
190   FOR J=1 TO N
200   LPRINT "V1";J;"=";V1(J), "V2";J;"=";V2(J)
210   NEXT J
220   LPRINT "GEH=";USING "###.##";GEH
230   INPUT "DO YOU WISH TO PERFORM A NEW GEH TEST(Y/N)";C$
240   IF C$="Y" THEN CLEAR:GOTO 40
250   END
```

APPENDIX L

Summary of the Frank - Wolfe algorithm

SUMMARY OF FRANK - WOLFE ALGORITHM

The principle of Equilibrium Assignment has been defined by Wardrop, as follows:

"Traffic arranges itself in such a way that all routes used for any origin - destination movement have equal and minimum costs (or times) while all unused routes have equal or greater costs".

A set of flows that satisfy Wardrop's principle can be obtained by finding a set of flows that minimizes the following 'objective function':

$$\min z(\mathbf{x}) = \sum_a \int_0^{x_a} t_a(\omega)\, d\omega$$

subject to

$$\sum_k f_k^{rs} = q_{rs} \qquad \forall\, r, s \qquad \text{flow conservation constraint}$$

$$f_k^{rs} \geq 0 \qquad \forall\, k, r, s \qquad \text{nonnegativity constraint}$$

and definition constraints

$$x_a = \sum_r \sum_s \sum_k f_k^{rs} \delta_{a,k}^{rs} \qquad \forall\, a$$

where

t_a travel time on link a

f_k^{rs} flow on path k connecting O-D pair r-s

q_{rs} trip rate between origin r and destination s

$\delta_{a,k}^{rs}$ indicator variable

$$\delta_{a,k}^{rs} = \begin{cases} 1 & \text{if link } a \text{ is on path } k \text{ between O-D pair } r\text{-}s \\ 0 & \text{otherwise} \end{cases}$$

In order to solve this problem, also known as User Equilibrium, it is sufficient to prove that the objective function is convex in the vicinity of $\mathbf{x}$ and that the region defined by the constraints stated above is convex.

The convex combination algorithm, suggested by Frank and Wolfe in 1956, is a method for solving quadratic programming problems with linear constraints. This method has been used to solve equilibrium assignments of traffic flows, i.e. to solve the objective function, discussed in the aforementioned text. The process of direction-finding step, included in the algorithm, assures a relatively quick convergence of the objective function to a unique solution.

In order to minimize the objective function, the method selects a feasible descent direction (vector), based on the product of the rate of descent and the length of feasible region, in the vicinity of $\mathbf{x}$. Thus, only directions that would maximize the descent of the function from a particular point are candidates for the calculation in the step procedure, ignoring unnecessary computations and approaching to the solution much quicker. The convex combination is dealt with as a linear approximation. It means that in the process of finding a solution to the objective function, the linear approximation to the function is being minimized instead of the function itself.

Applying the method to solve the objective function may be presented as follows:

$$\min z[\mathbf{x}^n + \alpha(\mathbf{y}^n - \mathbf{x}^n)]$$

subject to $0 \leq \alpha \leq 1$ optimal solution to line search

where n denotes the n th iteration and $(\mathbf{y}^n - \mathbf{x}^n)$ is the distance between point $\mathbf{x}$ and next point $\mathbf{y}$. The solution to the next iteration may be written as $\mathbf{x}^{n+1} = (1 - \alpha_n)\mathbf{x}^n + \alpha_n \mathbf{y}^n$ which is in fact a weighted average of $\mathbf{x}^n$ and $\mathbf{y}^n$ (or two 'all or nothing' assignments).

The n th iteration of the convex combination can be summarised as follows:

Step 1: Direction finding. (Finding of $\mathbf{y}^n$).

Step 2: Step-size-determination. (Finding of alpha).

Step 3: Calculation of the step move (weighted average).

Step 4: Convergence test. (Check difference between values of z in two successive iterations and compare to convergence criteria).

The Frank - Wolfe algorithm has been used in SATURN, as well as in other traffic models, to compute User Equilibrium assignments.

APPENDIX M

Index of junction shapes used in SATURN plots

1.  - External node

2.  - Priority junction

3.  - Roundabouts (not included in this project)

4.  - Signalised intersection

5. 175 - 'Dummy' node
(number only)

Shapes representing various junction types in SATURN plots (using program P1)

APPENDIX N

Traffic count movements at junctions

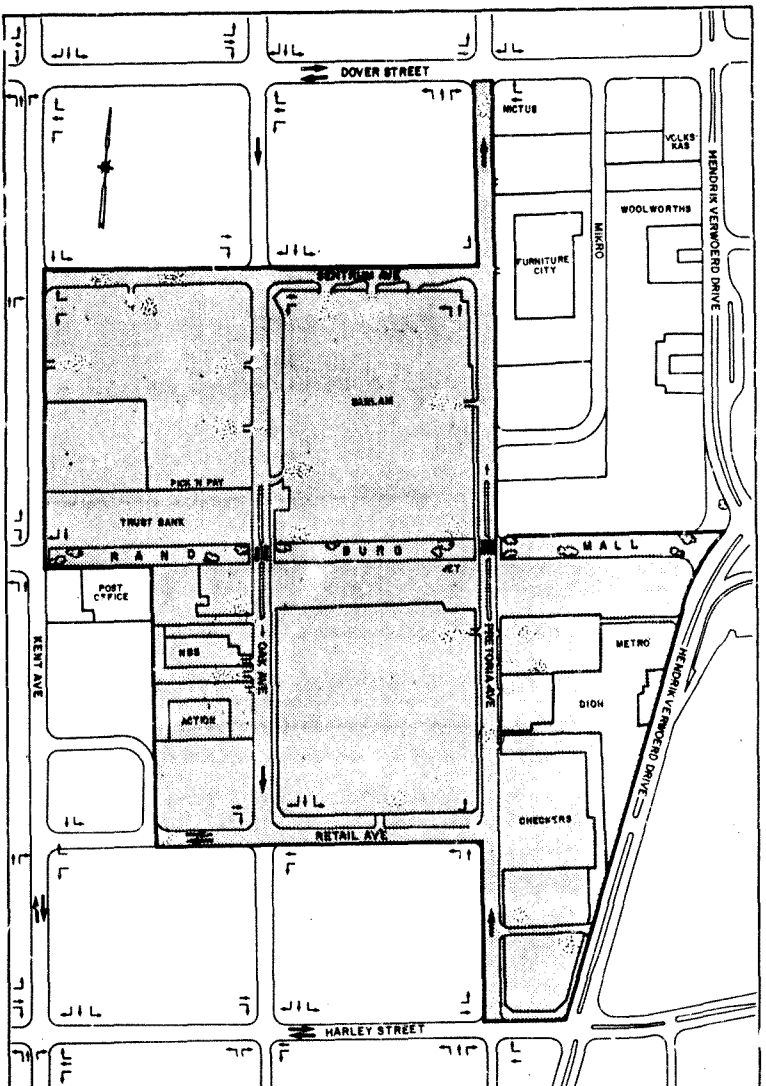

Figure N1 Traffic count movements at junctions within the study area shown by directional arrows

Author Aron Julian
Name of thesis Using 'saturn' To Determine The Effect Of Data On Model Accuracy And Operational Efficiency On A Network Of A Small Cbd. 1989

PUBLISHER:
University of the Witwatersrand, Johannesburg
©2013

LEGAL NOTICES:

Copyright Notice: All materials on the University of the Witwatersrand, Johannesburg Library website are protected by South African copyright law and may not be distributed, transmitted, displayed, or otherwise published in any format, without the prior written permission of the copyright owner.

Disclaimer and Terms of Use: Provided that you maintain all copyright and other notices contained therein, you may download material (one machine readable copy and one print copy per page) for your personal and/or educational non-commercial use only.

The University of the Witwatersrand, Johannesburg, is not responsible for any errors or omissions and excludes any and all liability for any errors in or omissions from the information on the Library website.