

https://dspace.org/

The potential benefits of feed distribution when applied to atmospheric crude distillation units

Kasese, Emmanuel

2015-01-23
http://hdl.handle.net/10539/16729

Downloaded from a DSpace repository. https://dspace.org/

THE POTENTIAL BENEFITS OF FEED DISTRIBUTION WHEN APPLIED TO ATMOSPHERIC CRUDE DISTILLATION UNITS

Emmanuel Kasese

Master of Science in Engineering by Research only:

A dissertation submitted to the Faculty of Engineering and the Built Environment, University of the Witwatersrand, in fulfilment of the requirements for the degree of Master of Science in Engineering.

Johannesburg. 2013

Declaration

I declare that this dissertation is my own unaided work. It is being submitted for Degree of Master of Science to the University of the Witwatersrand, Johannesburg. It has not been submitted before for any degree or examination to any other University.

……

(Signature of Candidate)

…… day of …… year ….....

Abstract

Distributed feed was applied on an Atmospheric Crude Distillation Unit (ACDU) to establish the energy and capital expenditure saving potential of the distributed feed policy, with the aid of (Column Profile Maps) CPMs and Aspen Plus as analysis tools.

As shown by Holland (2005), the advantages of using distributed feed over single feed are seen in separations with non-sharp split product specifications, thus making ACDU an ideal candidate for feed distribution. For multicomponent mixtures with more than 3 components, compositional plot visualisation is more difficult, thus most graphical methods fail and as a result a representative three component constant volatility mixture of pentane, heptane and hexane was selected on the assumption that it would fairly mimic the paraffinic synthetic crude oil behaviour. After analysis of the three component distributed feed schemes, the ideas were then extended to a synthetic crude oil system in Aspen Plus.

The results showed that there was potential to reduce equipment size, such as the condenser and furnace, plus there is a real opportunity to possibly do away with at least one or two pump-around circuits. Energy savings of above 30% were realized

Dedication

This work is dedicated to Stembile Mangauzani,

Acknowledgements

I am very grateful to the many people who assisted me in this research, without whom, this work would not have been possible. First of all, my gratitude to Mark Peters for inspiring and evoking the passion for distillation in me during my undergraduate years.

I am very grateful & humbled to have been able to work with and under the supervision of the distinguished duo of Prof David Glasser (Prof G) & Prof Diane Hildebrandt (Prof D) whose brilliance and foresight are unparalleled. Prof D, Prof G, Dr Peters for asking the right questions and throwing about ideas which seemed unorthodox at times but relevant to the research.

University of the Witwatersrand, School of Chemical and Metallurgical Engineering & COMPS for providing the academic platform and giving me the edge I needed to pursue and succeed in my research. The National Research Foundation (NRF) for the financial support via the SARChI chair for Sustainable Process Engineering.

Mark Peters for being patient, encouraging and always willing to engage and troubleshoot so that we could produce a clear document. Daniel Beneke for being a good mentor and springboard for ideas. My colleague Naadhira Seedat for the encouragement and listening when I needed to vent. The whole separations group:

Neil Stacey, Ari Hadjitheodorou, Edmund Bono and Nads for the endless discussions and suggestions. It was a pleasure and honour to be part of the group.

My debt of gratitude goes to my family, Samantha, Alpha, Paida, Sydney, Sophia, Rodney, Paul for the continued support and always believing in me. To them I want to say, “a new dawn is on the horizon where I am the giver and not the taker.”

Table of Contents

Declaration iii

Abstract iv

Dedication v

Acknowledgements vi

List of figures xi

List of Tables xv

Nomenclature xvi

Chapter 1

1 Synopsis 1

1.1 Introduction 1

1.2 Dissertation Overview 5

Chapter 2

2 Literature Review 8

2.1 Crude Oil and the Atmospheric Distillation Column 8

2.1.1 Atmospheric Crude Distillation Unit 9

2.1.2 Crude Oil Analysis 12

2.2 Distributed Feed Columns 13

2.3 Background to Column Profile Maps 17

Chapter 3

3 Research Procedure 21

3.1 Method 21

Chapter 4

4 Understanding Column Profile Maps (CPMs) 25

4.1 Simple Column CPMs 25

4.2 Distributed Feed Column CPMs 29

4.2.1 Limiting Case of Distributed Feed Minimum Reflux 33

4.2.2 Determining Split Ratios 37

4.2.3 Sharp split - Non sharp split Separation 39

Chapter 5

5 Results and Discussion 41

5.1 Feasible Separation 42

5.1.1 Base Case 1: Single Feed of 1kmol/s added at the bottom of the column as shown in Figure 3 42

5.1.2 Example 1 (a): Sub-Feeds of [0.3, 0.4, 0.3] kmol/s utilized in Figure 5 configuration. 45

5.1.3 Example 1 (b): Three Sub-Feed Column [0.2, 0.2, 0.6] kmol/s..... 52

5.1.4 Example 1 (c): Two Sub-Feed Column with flow rates [0.2, 0.8] kmol/s 56

5.2 Infeasible Separation 59

5.2.1 Base Case 2: Single Bottom Feed (equi-molar) of 1 kmol/s in the configuration as shown in Figure 3: 59

5.2.2 Example 2: Three Equi-molar sub-feeds of [0.1, 0.4, 0.5] kmol/s fed in Figure 8 configuration. 59

5.3 Varying the Quality of the Sub-feeds 65

5.3.1 Example 3: Manipulating base case 1 65

5.3.2 Example 4: ACDU 68

Chapter 6

6 Conclusions 79

References 81

List of figures

Figure 2.1: Conventional Atmospheric Crude Distillation Unit 11

Figure 2.2: A typical example of a True Boiling Point curve obtained from a Crude Oil assay, which can be used to approximate the composition of any crude oil sample (Figure adopted from Aspen Plus)..... 12

Figure 2.3: General column section depicting vapour-liquid inflows and outflows 17

Figure 3.1: a) Feed from the same source divided into two sub-feeds with same heat content-same phase quality b) Sub-feeds with same composition taken from the same source but with different phase qualities, one being a vapour and the other a liquid..... 22

Figure 4.1: Simple column for distillation of pentane, heptane and hexane; (b) Subsequent column section breakdown. 26

Figure 4.2: Column Profile Map for [$X_\Delta = X_D = [0.90\ 0.02]$ and $R_\Delta = R_{MIN} = 4$] for Figure 5..... 27

Figure 4.3: (a) Multiple feed column showing feed distributed four times along the column length; b) Subsequent CS breakdown for the distributed column shown in a). 30

Figure 4.4: Distributed case for a R_{MIN} of 4 for four equal equi-molar sub-feeds for a constant volatility pentane heptane hexane system. 32

Figure 4.5: a) Minimum reflux scenario for the pentane heptane hexane distributed feed system. Notice how the blue stripping TT pinches on the other column section TTs. A reflux ratio of 2.7 was used. b) Reflux ratio

of 3, column section TTs clearly overlapping, even though the operation is carried out below the simple column R_{MIN}. 34

Figure 4.6: Separation is carried at $R_{DMIN} < R < R_{MIN}$ at a reflux ratio of 3; A clear picture of the profile path charted to connect the product compositions by following the solid line profile starting at x_D and terminating at x_B. 36

Figure 4.7: Feed split ratios determined by varying R_Δ values of the internal CS which lies above the bottom feed using Equation 2. 38

Figure 5.1: Rectifying column section representing the Simplified ACDU. 41

Figure 5.2: Rectifying column profile (red) connecting the product compositions and a superimposed Aspen Plus Profile (blue circular markers). The external reflux ratio is 6.2. 44

Figure 5.3: a) CS breakdown for three sub-feeds of [0.3, 0.4, 0.3] kmols/s b) subsequent CS breakdown when a side draw is added. 46

Figure 5.4: Red rectifying profile (CS1), black profile (CS2), green profile (CS3) giving a continuous profile plus the Resulting Transformed Triangles (TT) for CS2 (black) & CS3 (green) with reference to Figure 5.5 configuration. 47

Figure 5.5: Aspen Plus profile (blue circular markers) superimposed on the CPM profiles with reference to Figure 4 configuration. The external reflux ratio is 3.5. 48

Figure 5.6: Matching the Aspen Plus (blue circular markers) with that of the Matlab profile obtained by changing the sub feed flow rates [0.2, 0.2, 0.6] for the same configuration shown in Figure 5.3 a). 54

Figure 5.7: Aspen Plus (blue circular marker) and Matlab profiles resulting from distributing the feed twice: sub-feed [0.2, 0.8] Kmol/s..... 55

Figure 5.8: Infeasible separation for given x_D of [0.9, 0.03] and x_B of [0.13,...] and a column operating at a reflux (R_D) of 3.5. 60

Figure 5.9: Column configuration (three sub-feeds) to achieve the specified product compositions in Base Case 2. 61

Figure 5.10: TTs from the two internal CSs (CS2, CS3), showing the CPM for each CS and the path/profile operated on (thick solid profile) to achieve the given distillate and bottoms product. 62

Figure 5.11: Congruity between the profiles derived from Aspen Plus (pink circular markers) and Matlab (solid black & green) profiles after distributing the feed three times for sub-feed flow rates of [0.1, 0.4, 0.5] Kmol/s. 63

Figure 5.12: Atmospheric Crude Distillation Unit set up showing alternative distributed feed configurations. Red streams represent vapour feed streams whilst the blue streams represent liquid feed streams. 70

Figure 5.13: Temperature profiles for the single vapour feed case **(**red), the 0.2/0.8 liquid/vapour split case (blue) and 0.3/0.7 case (green) for the simulated ACDU as a function of stage number. 73

Figure 5.14: Comparison of product flow-rates obtained for the single vapour feed case **(**red), the 0.20/0.80 liquid/vapour split case (blue) and 0.30/0.70 case (green) for the simulated ACDU and the resulting reflux ratios. 74

Figure 5.15: Vapour-liquid traffic, dashed and solid lines represent vapour and liquid flow-rates respectively. Base case single vapour feed (red), 0.20/0.80 liquid/vapour split case (blue) and 0.30/0.70 case (green). 75

List of Tables

Table 5.1: A comparison of the results of the various distributed column configurations with the base of a single bottom feed for the three-component system of pentane, heptane and hexane, using the same feed flow rate and with the same feed composition. Note the energy consumption per distillate flow rate in the last column**.** 57

Table 5.2: Comparison of total vapour Distributed feed with liquid and vapour distributed feed configuration for the pentane heptane hexane system for the same feed flow-rate. Note the reduction in the condenser duty. 67

Table 5.3: Energy consumption for single vapour feed configuration compared to combined liquid and vapour distributed feed configuration with reference to Figure 5.12. 78

Nomenclature

Symbols

B	Bottoms flow-rate (kmol/s)
D	Distillate flow-rate (kmol/s)
F	Feed molar flow-rate (kmol/s)
i	Component index ie *i* = 1,2,3….
L	Liquid flow-rate (kmol/s)
k	Column Section number
n, N_c	Stage number, number of components
R_{MIN}, R_{DMIN}	Simple column and Distributed feed minimum reflux ratio
R, R_Δ	General reflux ratio, Reflux ratio for column section
S	Side stream flow-rate (kmol/s)
V	Vapour flow-rate (kmol/s)
x	Liquid molar composition
x_B	Bottoms product molar composition
X^B	Column Section bottom liquid molar composition
x_D	Distillate product molar composition
x_S	Side stream product liquid molar composition
X^T	Column Section top liquid molar composition
X_Δ	Difference point
y	Vapour molar composition
Y^B	Column Section bottom vapour molar composition
y_F	Feed composition

Y^T	Column Section top vapour molar composition

Subscripts

B	Referring to Bottom
D	Referring to Distillate
DMIN	Referring to Distributed feed Minimum
F	Referring to Feed
i	Referring to component
MIN	Referring to simple column Minimum

Superscripts

B	Referring to Bottom
T	Referring to Top

Acronyms

ACDU	Atmospheric Crude Distillation Unit
CPM	Column Profile Map
CS	Column Section
TT	Transformed Triangle

Greek Letters

α	Constant relative volatility
Δ	Net molar flow-rate in Column section (mol/s)

1 Synopsis

1.1 Introduction

Distillation is possibly the most extensively-used separation process prevailing in the chemical and petrochemical industries, in spite of its relatively low efficiency (in terms of value for money and energy demand). This leads to high operating costs. The *APV Distillation Handbook* (2000) cites distillation as the largest consumer of energy in the process industry, accounting for more than 3% of energy dissipation in the USA (Andersen et al., 2000). It is one of the earliest unit operations still in practice, and can be traced back to first-century Greece. In the twenty-first century it has widespread commercial application in the separation of liquid mixtures into their various components. For example, it is used in the rectification of alcohol and the fractionation of crude oil (Towler & Sinnott, 2008). This makes distillation a fundamental operation in the chemical and allied industries.

The demand for purer products and improved efficiency has prompted continuous research into the techniques of distillation, with the objective of designing columns that distil the required product quality at minimal cost, thus maximizing profits. Researchers aim to achieve this purpose by synthesizing low-energy distillation configurations. However, the development of their approaches is hindered by an incomplete knowledge of the 'search space' for a proper distillation network. Currently, there is no systematic method available to identify

all the possible distillation configurations that can serve a particular purpose (Ozokwelu, 2011).

Over time, many of those engaged in this field of research have devised new techniques for the analysis and synthesis of distillation columns. These range from approaches based on heuristics procedures and calculations to computational methods such as the Aspen Plus simulation software,. Among those working on these methods were McCabe, Thiele, Lewis & Matheson, and Thiele & Geddes (Holland, 1963). Recently, however, there has been a slight shift in focus. Researchers have turned their attention to the more complicated distillation columns, like those that have more than one feed and/or more than two product streams (distributed feed addition or multi-product removal columns, and thermally-coupled columns). The aim is to find out more about the intricate details of how these columns function (which would shed light on ways their operation could be reconfigured), because researchers have found that there are distinct advantages to distillation by means of these complex column designs.

Few of the techniques that are currently available can be used to design novel or complex configurations. However, a graphical method called the Column Profile Map (CPM) not only gives insight into the operation of columns, but has been shown to be applicable to simple and complex columns alike. The method is an adaptation and modification of Doherty's original rectifying and stripping differential equations—DEs (Doherty & Malone, 2001), which allow the designer to plot column profile maps that are effectively residue curve maps at finite reflux.

The CPM eliminates the need for trial-and-error design procedures, and makes it possible for the designer to use the models developed to initialize simulations in software packages like Aspen Plus. (Because this prevents the designer from making poor initial decisions, time and money can be saved.) By systemically varying the product compositions and generating these profiles, the researcher can acquire valuable insights into how non-conventional (complex) distillation systems operate. Tapp et al., (2004), who did the original pioneering work on CPMs, assert that by this means any distillation process can be modeled, including multiple feed addition, side-stream withdrawal, and column coupling. The method provides an analytic tool for finding alternative solutions that are generated in the synthesis phase for ideal and non-ideal mixture systems. It thus offers a technique for design and analysis that can be applied to any and all configurations (Holland, 2005).

According to Holland (2005), although distillation research is long-standing, relatively little of this body of work has focused on the effect of feed distribution on a separation. Using the CPM method for different multi-component distillation systems, as illustrated in Chapter 4 of Holland's thesis (2005), the distributed feed column can lessen the energy and capital cost demands of a column by reducing the reflux ratio to a value lower than the simple column minimum reflux, and requiring fewer stages. He also showed that apparently infeasible alternative designs could be made feasible by using distributed feed. Although these findings are of great value to designers, perhaps their most salient feature for industry is

the significant savings the distributed feed method offers in terms of energy usage and capital cost.

The design of distributed feed columns has been shown to be especially effective in cases of non-sharp split product specifications. Holland (2005) demonstrated that for sharp split product specifications the limit is the absolute two-product column minimum reflux ratio, and that no feed addition strategy will lower this value.

The chief thrust of the research that is currently under way is directed at developing alternative distillation sequences for ideal/non-ideal mixtures that have practical applicability for already-established processes in both the petrochemical and chemical industries. The separation of crude oil into various fractions in the petroleum industry is one such example. It is an ideal choice for distributed feed because it requires non-sharp split product specifications. Thus far, the methods of analyzing petroleum fractionation have been largely empirical (or based on empirical criteria). However, there is a similarity between light hydrocarbon fractionation and crude oil distillation (Watkins, 1973). This dissertation proposes that if one takes a three-component [1] light hydrocarbon mixture such as pentane, hexane and heptane, and analyzes its behaviour under distributed feed, one can extend the results to a crude oil mixture, subject to certain caveats, described by Doherty & Malone (2001). The constant values of the relative volatilities must

[1] A three-component system was chosen on the basis that graphical methods become ineffective for multicomponent mixtures with more than four components, as visualisation becomes more difficult.

have a reasonable approximation to the vapour–liquid equilibrium, and the Constant Molal Overflow approximation must be adequate.

Through the use of CPMs in conjunction with Aspen Plus, this researcher will seek to prove that there are significant benefits to be gained by utilizing distributed feed in a variety of distillation systems. It must be emphasized that the work in this dissertation is in the nature of an exploration of the possible opportunities created by using distributed feed. The examples looked at are not optimized and so the opportunities found in this work are not the necessarily the maximum benefit that could be achieved. Furthermore other issues such as controllability or a cost analysis are not considered in this work.

1.2 Dissertation Overview

Part of the body of work that forms part of the dissertation was presented at the 2012 AIChE Annual Conference in Pittsburgh, Pennsylvania, USA. The work has also been submitted for publication to the peer-reviewed AIChE Journal. The current reference is:

> Kasese, E.; Peters, M.; Hildebrandt, D.; Glasser, D. Towards Energy Reduction in Atmospheric Crude Distillation Units using Distributed Feed, *AIChE J*., **2013**, submitted for publication.

The research undertaken is counter-intuitive, great effort was put into simplifying the work to make it more readable and easier to understand for this dissertation.

Chapter 2 surveys the available literature that deals with crude oil, distributed feed columns and CPMs. The chapter looks at how crude oil analysis is traditionally done with focus on elements that influence the design of the ACDU. It looks at distributed feed columns and the various attempts to come up with methods that allow for a proper analysis of these complex columns. Finally, a brief overview of the CPM method, from its inception to its applicability in distillation analysis is looked at.

Chapter 3 gives an outline of the research methodology applied to attain the results

Chapter 4 is introductory work on CPMs so that the reader can better comprehend and appreciate their usefulness in analysis. The chapter looks at the application of CPMs on a conventional simple column and a distributed feed column (with reboiler). The work in this Chapter seeks to demonstrate in a clear way, the strength of CPMs in aiding analysis of distillation systems by painting a picture of the composition space within the mass balance triangle and how this space can be altered by distributing the feed. The chapter also looks at the limits of distributed feed.

Chapter 5 investigates various distributed configurations for the pentane, heptane and hexane ideal system. Analysis was carried by application of CPMs and using Aspen Plus to determine the reflux and energy demands of the

various configurations. The ideas above were extended to a full synthetic crude oil in an Aspen Plus environment where a pseudo ACDU loosely based on the concept of a rectifying section was created. This chapter comprises the results and discussion sections.

2 Literature Review

2.1 Crude Oil and the Atmospheric Distillation Column

The published information on refinery processes and operations is scant, and mostly confined to licensor's data (Parkash, 2003). However, there is an overall consenus among engineers that crude petroleum as it is produced from the field is a relatively low-value material because it is rarely usable in its natural state (Watkins, 1973). Crude oil is a mixture of hydrocarbons ranging from methane to asphalt. Generally the first step in any petroleum refineryis the separation of the crude oil into various fractions by the process of distillation. Petroleum is a thermolabile mixture, and the separation is carried out at temperatures high enough to cause detrimental chemical reactions to take place. These in turn result in a thermal cracking of some of the heavier components. The problem faced by designers of distillation columns is how to ensure the maximum possible extraction of the light components from these mixtures without the exceeding a specific temperature level (Petyluk, 2004). The objective of distillation is to fractionate crude oil into light end hydrocarbons like C1–C4, naphtha/gasolene, kerosene, diesel and atmospheric gas oil (Parkash, 2003).

The distillation is normally carried out at pressures slightly above atmospheric level. This allows for a pressure drop in the column and also a rise in the boiling point of the light end products. The latter is achieved by raising the vapour pressure so that cooling water can be used to condense some of the C3 and C4 in

the overhead condenser. It also places the uncondensed gas under sufficient pressure to allow it to flow to the next piece of equipment. The design procedures for atmospheric distillation are mostly empirical (Parkash, 2003), but Watkins (1973) went as far as to claim that in some cases they are devised on a subjective basis. The two authors agree, however, that crude oil is made up of an almost infinite number of discrete hydrocarbons, which present designers with a serious problem.

2.1.1 Atmospheric Crude Distillation Unit

The Atmosperic Crude Distillation Unit (ACDU) is the crude refinery's core piece of equipment, as it carries out the initial separation of the crude oil mixture into the desired fractions (Lee et al., 2009). The ACDU fractionates the feedstock (crude oil) into different products with characterisctics aimed at satisfying the demands for of the market for motor fuels (gasoline, kerosene and diesel), combustible fuels (LPG, kerosene, heating gas oil and fuel oil) and feedstocks for the petrochemical industry (Ricci & Montanari, 2008).

Lee et al. (2009) described how inter-condenser philosophy was adapted to crude atmospheric column design to minimize the internal vapour–liquid traffic throughout the column (Lee et al., 2009). This was achieved by a series of refluxes, comprising an external reflux, which consists of part of the condensed overhead product, and intermediate refluxes. The latter are made up of liquid withdrawn from the column, which, after cooling (usually by heat exchange with

the cold feed), is returned at a point above that from which it was withdrawn (Ricci & Montanari, 2008). These intermediate refluxes are generally called pumparounds. The feed is preheated with heat recovered by means of heat exchange with the overhead vapours, side fractions, intermediate refluxes and the atmospheric residue before being fed to the furnace (Ricci & Montanari, 2008). It becomes quite apparent that this column represents a form of non-adiabatic distillation because of the pumparounds that transfer heat to the crude feed. This set-up results in maximum heat recovery and uniform vapour and liquid loads. Superheated steam strips the side fractions by passing them through small side stream strippers to remove light components from the side product streams and return them into the column (Parkash, 2003).

The diagram in Figure 2.1 depicts a typical atmospheric crude distillation unit. The design allows for integrated heat recovery via the application of pinch technology, which was developed by Bodo Linnhoff and various collaborators (Towler & Sinnott, 2008).[2] In a conventional column, heat is brought in the reboiler and removed in a condenser, which is the simplest and most prevalent method. However, according to the Second Law of Thermodynamics, this is thermodynamically inefficient, due to the high temperature of heat feeding and the low temperature of heat removal (Petyluk, 2004). In contrast, unlike a conventional distillation unit, the ACDU does not have a reboiler. Instead it uses side strippers and pumparounds, for reasons explained earlier.

[2] Linnhoff and his collaborators developed this technique with ICI, Union Carbide, and the University of Manchester. Pinch technology is a design method used to optimize process heat recovery when there are multiple hot and cold streams, which leads to the possibility of many heat exchange networks.

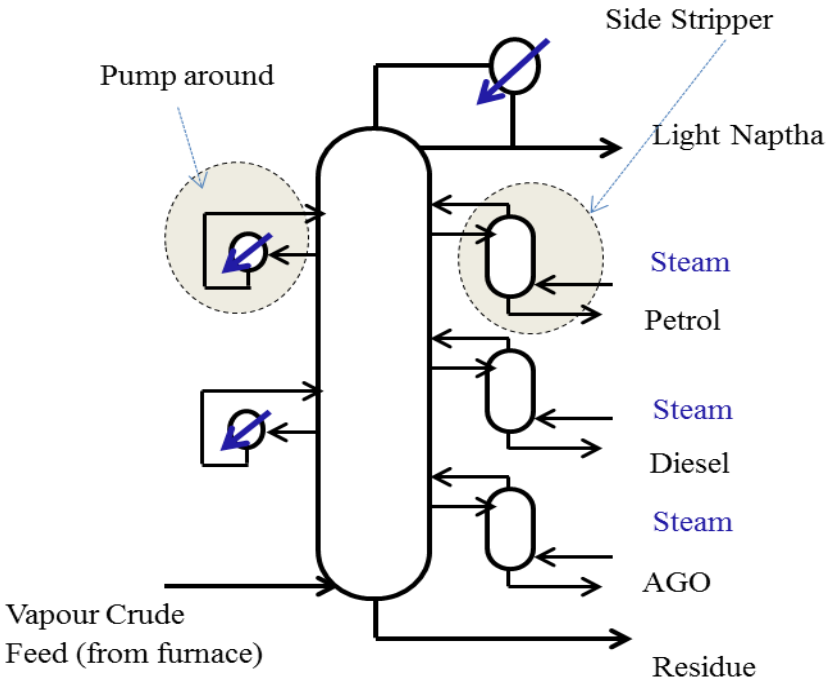

Figure 2.1[3]**:** Conventional Atmospheric Crude Distillation Unit

[3] Comprises three (3) side strippers and bottoms steam feed to remove light components from the side and bottoms product streams, plus two pumparound circuits to control the internal vapour-liquid traffic.

2.1.2 Crude Oil Analysis

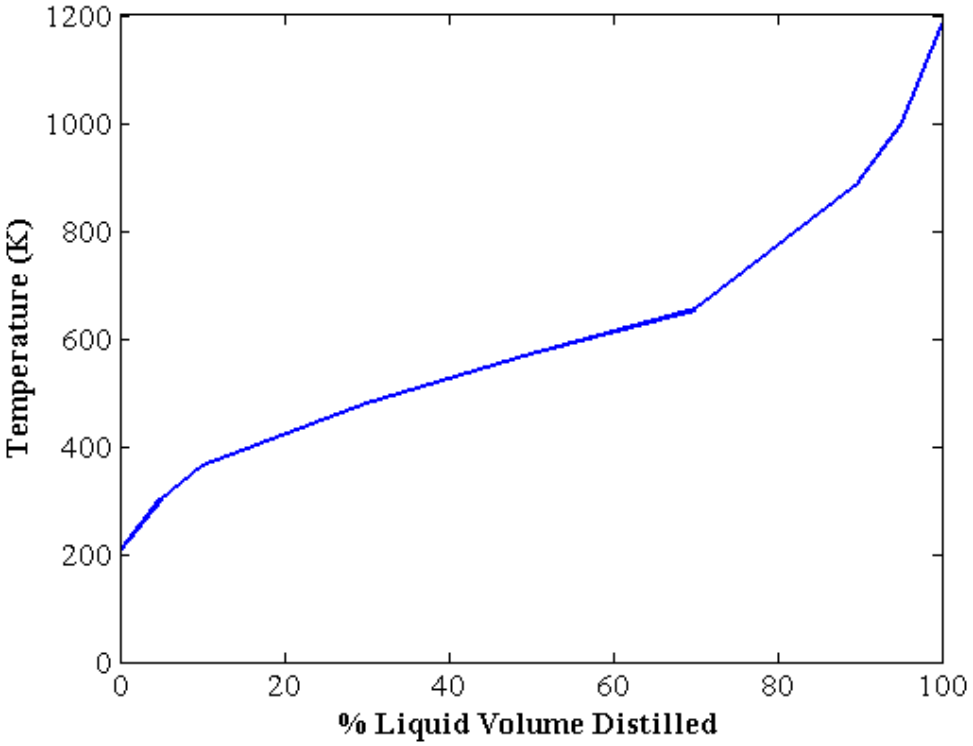

Figure 2.2: A typical example of a True Boiling Point curve obtained from a Crude Oil assay, which can be used to approximate the composition of any crude oil sample (Figure adopted from Aspen Plus)

A crude oil assay, which is a compilation of laboratory and pilot plant data that defines the properties of a specific crude oil, is the first step in the distillation process (Jones & Pujad, 2006). The reason is that a complete component-by-component analysis of a crude oil sample is not practically realizable. The composition of the oil is approximated by a true boiling point (TBP) distillation curve, like the one shown in Figure 2.2. This is obtained by carrying out a batch

distillation operation that applies a large number of stages and high reflux ratios. This allows the temperature at any point on the volumetric yield curve to represent the TBP of the hydrocarbon material at that volume percentage point. Once the TBP cut range is known, a method developed by the American Society for Testing and Materials (ASTM) is used to predict the ASTM distillation curve for the products (Jones & Pujad, 2006). According to both Watkins (1973) and Parkash (2003), ideal fractionation is the difference between 5–95% points on the ASTM distillation curves obtained from the ideal TBP curves of adjacent heavier and lighter cuts.

2.2 Distributed Feed Columns

One of the most important characteristics of a distillation process is its energy demand, which is governed by three factors: the phase equilibrium, the composition of the feed, and the distillation effectiveness of the column (Glanz & Stichlmair, 1997). The minimum energy demand for columns is determined via the minimum reflux or reboil ratio. Even though distillation columns with multiple feeds are often used in processes for the separation of multicomponent mixtures, until a few years ago designers paid little attention to the energy-saving potential of different column modifications like reflux reduction, feed conditioning, and scope for side reboiler/condenser for complex columns (Bandyopadhyay et al., 2004). The methods that are commonly used to determine the energy requirement of a complex column belong to three categories: graphical, approximate, and computationally rigorous (Bandyopadhyay et al.,

2004). The most well-known shortcut for calculating the minimum reflux ratio was devised by Underwood, but its applicability is limited to mixtures with ideal vapour–liquid equilibrium. Barnes, as cited in Glanz & Stichlmair (1997), extended the Underwood method to include calculations for multi-feed columns.

Glanz & Stichlmair (1997) developed a novel approach to calculating the minimum energy demand for a multi-component ideal/non-ideal distillation system. In their research, Glanz & Stichlmair (1997) used a two-feed column for an iso-butanol/iso-propanol/n-propanol system. When it came to the question of correct feed sequence for non-equi-molar feeds, these scientists generally took the traditional route, in terms of the feed with the lower boiling point is positioned above the feed with the higher boiling point. They concluded that in multiple feed columns one of the feeds always determines the energy demand for the entire column, and suggested a means to determine which the controlling feed was. If each of the feeds was assumed to be the controlling feed, the one found to have the largest minimum energy demand would be the one that controls the energy input for the entire column. They reported excellent agreement between their results and those obtained from rigorous calculations

Various researchers have published work on multiple feed distillation columns. As far back as 1972, Barnes et al. calculated the minimum reflux for distillation columns with multiple feeds by extending Underwood's minimum reflux equation to columns with two or more feeds. In a manner analogous to the CPM method described in Chapter 1, Barnes and his collaborators divided their column into different sections in accordance with the number of feeds. The result was the

creation of intermediate sections as well as external sections, which they referred to as upper section (IS1) and lower section (IS2) respectively. In order to cope with the complexity of the calculations, they developed a Fortran computer programme for up to five feeds, which can analyse a multi-component mixture of as many as 20 constituents (Barnes et al., 1972).

An alternative way of splitting the feed was investigated by Soave et al. (2006). By dividing the feed into proper proportions of two streams and precooling only one stream, these researchers achieved results that showed an improvement in condenser duty. They interpreted this finding by suggesting that the precooled stream served to keep the minimum reflux ratio low, and inferred that the condenser duty was controlled by the temperature of the cold feed, and decreased with the minimum reflux ratio according to the heat balance in the upper section of the tower.

Pursuing the supposition that there are economic benefits to be achieved by distributing the feed along the column, Viswanathan & Grossmann (1993) formulated a rigorous procedure for finding the optimal locations for feeds and the number of trays required for a specified separation column with multiple feeds. Their approach, which was completely equation-based, used Mixed-Integer Nonlinear Programming (MINLP) for the purpose. According to these researchers, the results they obtained for the reflux ratio differed only slightly from those achieved through Aspen Plus and by Nikolaides & Malone (1987). Sargeant & Gaminibandara (1976), as cited in Viswanathan & Grossmann (1993),

pointed out that solutions of mathematical optimization problems in distillation columns often do not conform with a researcher's intuitive understanding of the problems. Viswanathan & Grossmann (1993) concluded that though their solutions cannot be guaranteed to be universally optimal, their method is a robust tool for solving these problems.

Cho & Joseph (1984) developed reduced-order dynamic models for distillation columns by applying a polynomial approximation method. The column profile discontinuities introduced by feeds and side draws could be partially removed through suitable redefinition of variables, which would make it possible to fit the column profiles with a single polynomial across the entire column. Bandyopadhyay et al. (2004) proposed a simple methodology that extended the applicability of Invariant Rectifying-Stripping (IRS) curves from simple single-feed to complex multiple-feed columns. This method breaks or decomposes a complex n-feed column into n single-feed columns by calculating the contribution of each feed to the product. Each side product from a complex distillation may be considered as a feed to the column with negative flow rate. Hence, a complex column with multiple feeds and products is equivalent to a complex column with multiple feeds where some of the feeds have negative flow rates. The principles and thinking of this method are in line with those of CPMs. Bandyopadhyay et al. (2004) also concluded that the minimum reflux (rather than boiling point, flow rate, composition, or thermal condition) is the best criterion for sequencing feeds in a complex column, a conclusion reached earlier by Vishwanathan and Grossmann (1993).

From this literature survey one can infer that the methods currently available for dealing with complex columns, such as the distributed feed column, are themselves complicated. This provides justification for the need to find or devise a method that simplifies the analysis of such complex columns. One such method is the CPM developed by Tapp et al. (2004).

2.3 Background to Column Profile Maps

In their introductory paper on the derivation and application of CPMs, Tapp et al. (2004) applied their method to an ideal thermodynamic distillation system (with constant relative volatility). This involved the use of differential equations as a shortcut method, which, they argued, had been well established over the previous three decades.

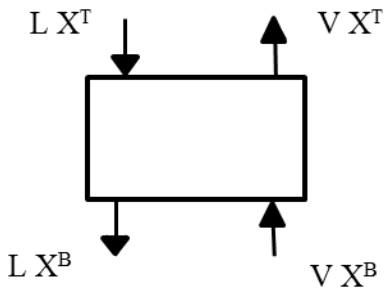

Figure[4] 2.3: General column section depicting vapour-liquid inflows and outflows

Tapp and her co-researchers also demonstrated the ineffectiveness of RCMs when applied to finite reflux separations, a weakness that they addressed by the use of

[4] V & L represent vapour and liquid flow rates, whilst Y^T, X^T & Y^B, X^B are the vapour and liquid compositions at the top and bottom of the column section respectively.

operating leaves therein defined as the total attainable composition region in a column section for a particular product specification (Doherty & Malone, 2001). The limitation of the operation leaf method is that it is essentially restricted to the conventional one-feed, two-product distillation column, and cannot be applied to mixtures with more than four components. Tapp et al. (2004) through the use of the difference point equation[5] (DPE) shown in Equation 1, proposed an adaptation of Doherty's original rectifying and stripping differential equations (DEs):

$$\frac{dx_i}{dn} = \left(\frac{R_\Delta + 1}{R_\Delta}\right)(x_i - y_i) + \left(\frac{1}{R_\Delta}\right)(X_{\Delta i} - x_i) \qquad i = 1,2....N \qquad (1)$$

where $\Delta = V - L \neq 0$, $R_\Delta = \frac{L}{\Delta}$, $X_\Delta = \frac{V^T Y^T - L^T X^T}{\Delta}$

The DPE is defined only on the parameters of the general column section shown in Figure 2.3 which was defined as a length of column between points of addition or removal of material or heat. The DPE describes the change in liquid composition of component, x_i, as a function of stage number, *n*, in a column section: Where *N* is the number of components, Δ is the net flow and is positive in a rectifying section and negative in a stripping section, R_Δ is the reflux ratio, and y_i is the vapour mole fraction of component *i* that is in equilibrium with material of composition $\underline{x} = (x_1, x_2, \ldots, x_{nc})$. These researchers defined the difference point, X_Δ, as a pseudo net molar flow composition within a column section that is not

[5] The DPE, Equation 1, resulting from the Column Section will tend to the residue curve equation as R_Δ approaches infinity, signifying that the two are linear transforms of each other.

restricted to product compositions or values within the Gibbs Mass Balance Triangle (MBT— defined by the axis limits $0 \leq x_i \leq 1$ and $\sum x_i = 1$) and all that is required is that $\sum \Delta X_{\Delta i} = 1$. By doing this, they created new operating leaves, which extended to areas previously untouched by the original operating leaves. The uppermost column section, terminated by the condenser, is a standard rectifying section, while the bottommost CS, terminated by the reboiler, is a standard stripping section. The column sections between these are neither conventional rectifying nor stripping sections, but can operate in “rectifying-type" mode or “stripping-type” mode, depending on the net direction of movement of material in each section. Any given column configuration, no matter how complex, can be broken down into column sections.

As a continuation of their work on CPMs, Holland et al., (2004) wrote a paper that explored the mathematics and the topology of the maps for systems with ideal and non-ideal thermodynamics by looking at the occurrence of singular points in ternary homogeneous systems, depending on the values of the design parameters of the difference point and the reflux ratio. Their argument was intended to prove that CPMs are actually transforms of the RCMs because the difference point equation (DPE) is a linear transform of the residue curve equation. The topography of the CPMs depends on the number and kind of singularities occurring in a system, thus a system is defined by the thermodynamic data used to generate the CPMs.

Holland et al. (2004) also proposed that the theory they presented could be extended to systems with more than three components, and that the approach would make it possible to characterize and manipulate the behaviour of these systems by controlling the movement of singular points. They also emphasised the importance to the way the ideal system operated of design parameters, reflux ratio and difference point composition in determing the occurrence of singularities. In another paper published the same year (Holland et al., 2004b), they made the claim that "the final CPM design can be used to initialize rigorous simulation packages when more accurate results are required", which would prevent the designer from wasting time in the initial stages of the design process.

The following year, 2005, Holland and his co-researchers wrote another paper entitled, "Novel separation system design using moving triangles", claiming that the short cut distillation design techniques that were then in exixtence were not useful in the design of novel or complex configurations. Using CPMs they wanted to show that any distillation configuration, no matter how complex, can be modelled and the behaviour thereof more thoroughly understood.

3 Research Procedure

3.1 Method

The aim of this research was to determine whether distributing the feed along the length of an ACDU has any commercial or technical advantages. Two methods of distributing the feed are explored. The author explored two methods of distributing the feed: by dividing feed from the same source into different sub-feeds with the same feed quality (see Figure 3.1(a)); and by using sub-feeds with different phase qualities (Figure 3.1(b)). The CPM method was applied on the selected ternary system (pentane, heptane, hexane) to gain insight into how changing the distribution of the feed along a column alters the topology of the CPMs, and Aspen Plus simulation was then used to validate the results.

The same technique was applied to the synthetic crude mixture in Aspen Plus. The results were not optimised, that is, neither the positions where the feed was added were varied nor the quantity of the sub-feeds manipulated. The research only explored whether there were an advantages to distributing the feed.

The procedure followed was sequential, as follows.

- After selecting a configuration, in this case a simple column and a distributed feed column, the column was broken down into column sections.

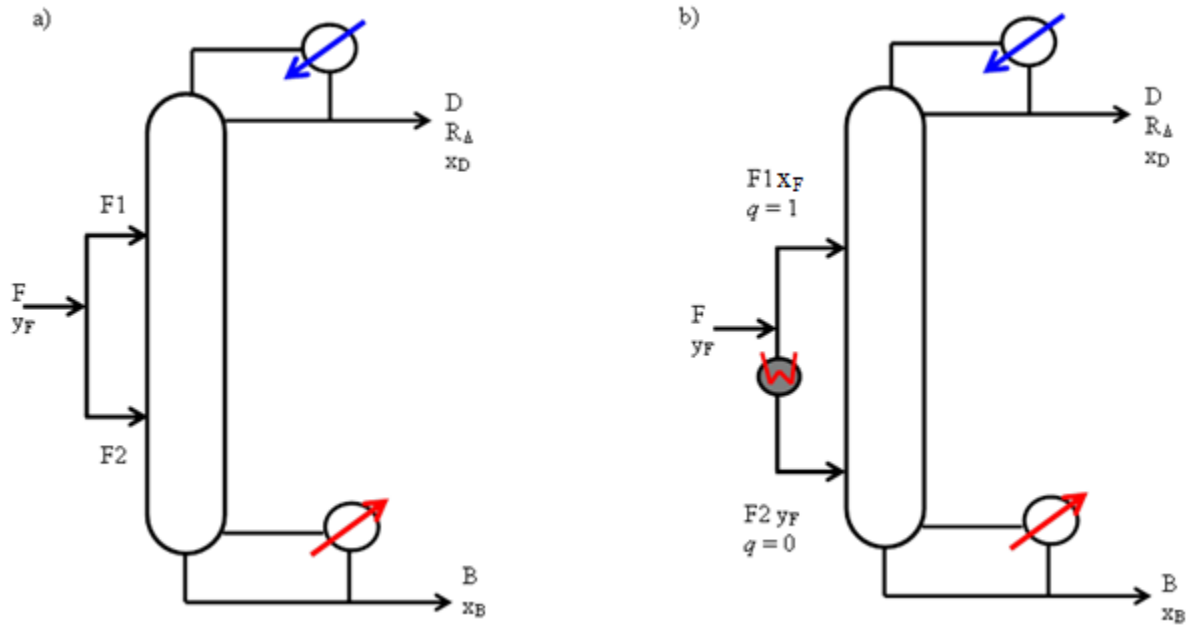

Figure 3.1: a) Feed from the same source divided into two sub-feeds with same heat content-same phase quality b) Sub-feeds with same composition taken from the same source but with different phase qualities, one being a vapour and the other a liquid.

- X_Δ for the disillate product (it equates to x_D for the rectifying section) was set. In the case of distributed feed, X_Δ and X_Δ, of the internal CS was manipulated by introducing sub-feeds at different points.
- An ideal thermodynamic model was chosen for the selected pentane heptane and hexane system – this model adequately depicts the system, using constant relative volatilies (α_i) of [8 1 3] for pentane (light) heptane (heavy) and hexane (intermediate) respectively. Matlab was used to produce the CPMs for all column sections. By superimposing the profiles on each other, the feasibility of a process can be established bearing in mind that feasibility criterion is only met when column profiles intersect and the mass balance line goes through the product compositions.
- Where the feasibility criterion was not met for a simple column, the researcher repeated the procedure above with a different set of X_Δ and reflux ratio (R_Δ) values. These design parameters can be manipulated either individually or in combination, depending on what the designer is aiming to achieve or prove.
- Since the distillate composition was preset, the bottoms product composition was determined by looking at the point where the mass balance line and bottom CS compositional profile crossed. The stage number which is an inherent part of the CPM design was obtained by simply counting off the stage number on the CPM profiles – obtained from the DPE.

- The design parameters obtained above were exported to initiate an Aspen Plus simulation, which gave information on the energy demand and stage-by-stage flow rates, and made it possible for a comparison of the composition profiles for each configuration with those obtained from the CPM.

4 Understanding Column Profile Maps (CPMs)

The nature of this research is counter intuitive and will resonate better with the reader, if the reader has some insight into how CPMs work and how they can lend themselves useful in the analysis of Complex Columns. The following chapter will serve as an introductory piece to CPMs application. To highlight the effectiveness of CPMs in analysis of simple and distributed feed columns alike, the method was applied on an ideal system of pentane, heptane and hexane. A total feed rate of 1 kmol/s with an equi-molar composition is used for the demostration.

4.1 Simple Column CPMs

The conventional column depicted in Figure 4.1 a) can be broken down into two CSs i.e. the standard rectifying (red) and stripping (blue) sections which are shown in Figure 4.1 b). The resulting CPMs for the respective CSs generated by using an arbitarily chosen x_D of [0.90 0.02] – representing the light and heavy component compositions, the intermediate component compostion can be obtained from a molar composition balance – and a reflux ratio (R_Δ) value of 4 are represented in Figure 4.2. The latter happens to be the minimum reflux ratio (R_{MIN}), as the stripping profile pinches[6] on the rectifying profile in this case.

[6] The stripping profile (blue) just touches the rectifying profile (red) without crossing it. A slight reduction in Reflux ratio will render the specified separation infeasible as it will cause the stripping profile to recede, resulting in a discontinuous profile from x_B to x_D.

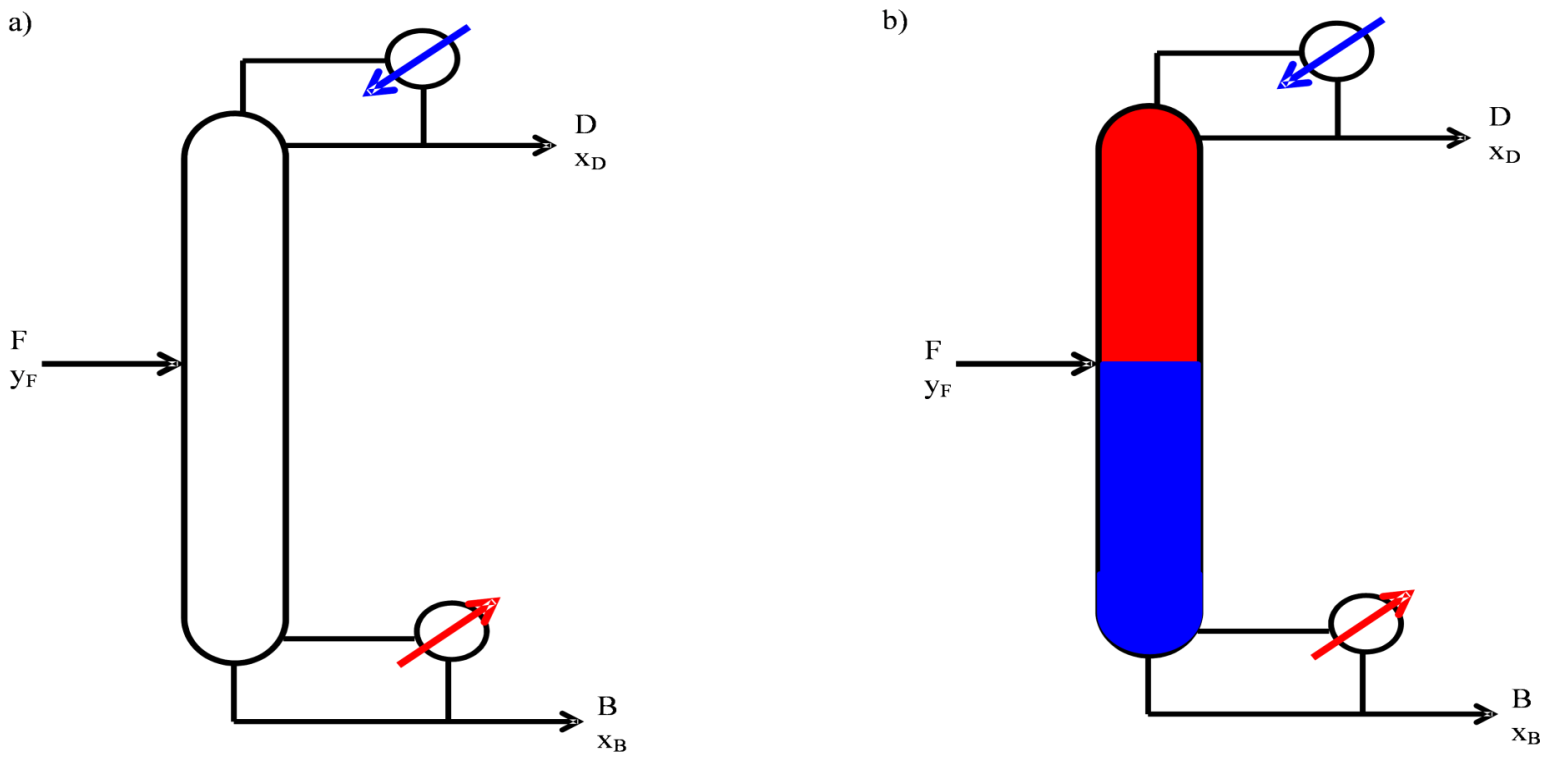

Figure 4.1: Simple column for distillation of pentane, heptane and hexane; (b) Subsequent column section breakdown.

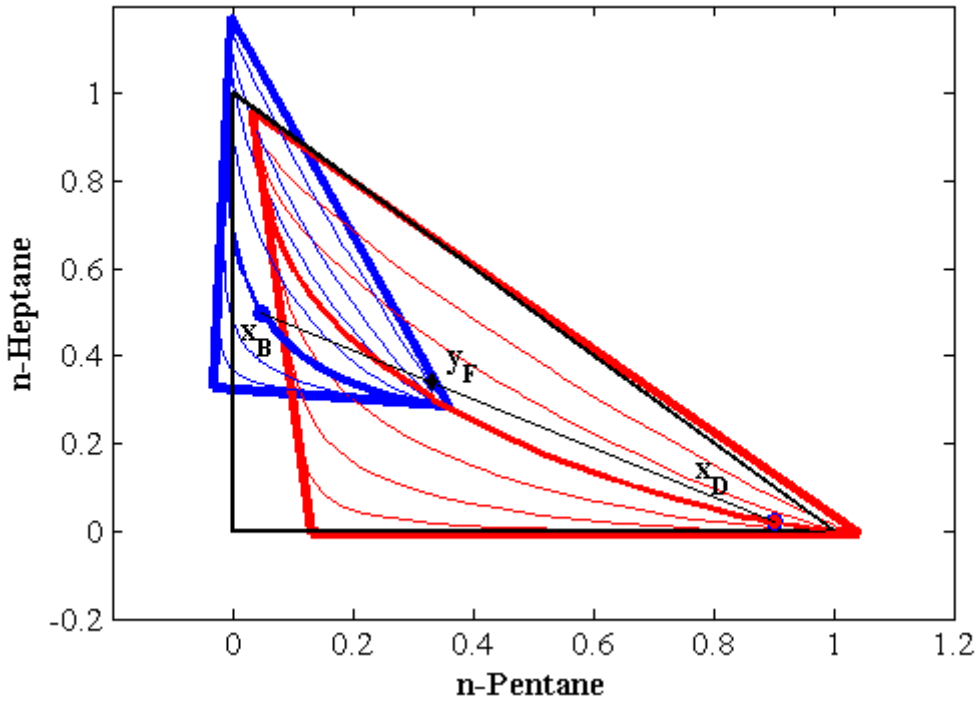

Figure[7] 4.2: Column Profile Maps for [$X_\Delta = x_D$ = [0.90 0.02] and $R_\Delta = R_{MIN} = 4$] for rectifying (red) and stripping (blue) CSs in Figure 4.1b. Mass Balance Triangle (MBT) is shown in black. Bold profiles represent actual liquid profiles followed in each CS.

[7] Red and blue column sections represent the rectifying and stripping sections in the column section (CS) breakdown for a conventional column. The CPM for each CS still has a stable, saddle and unstable node just like the RCM, except that each shows a shift in composition space, each vertex of the CPM no longer corresponds with a pure component, and the edges do not necessarily represent a binary mixture.

For the ideal system represented in Figure 4.2, the reader should note how the singularities have shifted in composition space, although the geometry of the of the RCM is retained for the X_Δ and R_Δ values used for both column sections. The shifting of these sigular points leads to the phenomenon of tranformed mass balance triangles — TTs (Tapp et al., 2004), which is explained in detail by Tapp and her co-authors. TTs are only valid in systems exhibiting ideal thermodynamic behaviour. Connecting the stable, unstable and sadle nodes results in the TT for the rectifying section (red), and stripping column section (blue). These nodes, and hence the TT, can also be sought analytically by equating the DPE (equation 1) to zero (definition of a pinch) and solving for the roots.

The characteristics of the CPM under these conditions are as follows.

- For column separation feasibility, the mass balance constraint has to be satisfied, that is, a line drawn through the product compositions x_D and x_B should pass through the feed composition (y_F), as depicted by the black line in Figure 4.2. A continuous profile that conncets the product compositions is also required.
- For simple columns, an overlapping of TTs is not a sufficient condition for separation feasibility, unless one is working at or above R_{MIN}. Below R_{MIN}, even if the triangles overlap, there is no continuous profile that connects the products x_D and x_B.
- We can therefore deduce that a simple column design is quite inflexible, as the designer is limited by minimum reflux, and the operation can be carried out on the rectifying and stripping profiles only. There are no

fractionation improvements in the intermediate component composition in cases where a side product is drawn.

4.2 Distributed Feed Column CPMs

Tapp et al. (2004) state in their paper that any given column configuration, no matter how complex, can be broken down into column sections. For *k* number of sub-feed streams, *k*+1 column sections will be created. Figure 4.3 a) shows an example of a distributed feed column, and in b) the breakdown of that column into sections.

Accordingly by distributing the feed equally four times along the column, one creates five column sections (ie. $k = 4$). The same sectioning method applies when there are side-draws present. The top and bottom sections are the standard rectifying (red) and stripping (blue) sections, and three new internal column sections (black, pink, green) are introduced. Each of these has its own unique R_Δ and X_Δ values, and consequently its own distinctive column profile map, leading to the formation of TTs.

For any given distillation column the feasibility criterion is that it has a continuous profile connecting the distillate and bottoms compositions. Therefore if the TTs overlap (since they encompass all possbile profiles for a particular CS), it should be possible to switch from one profile in one CS to another profile in another CS, provided the profiles intersect.

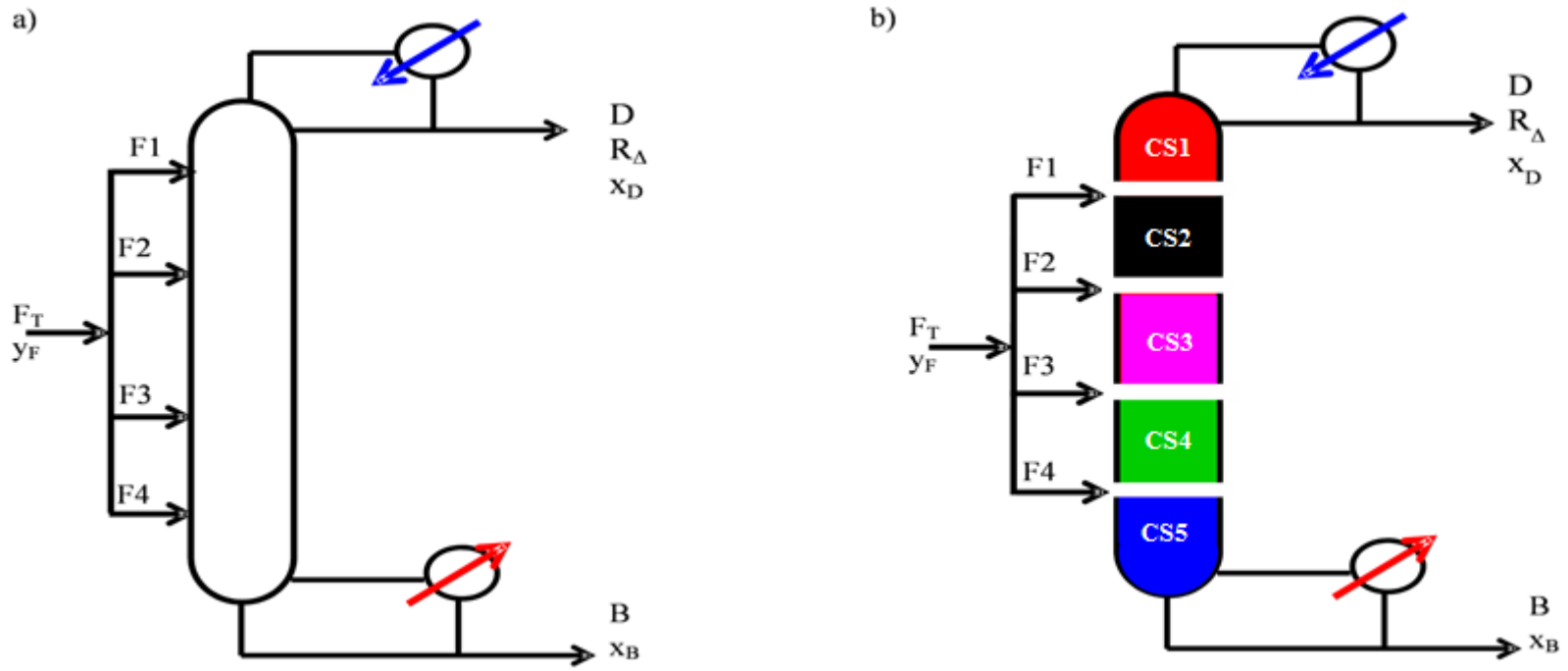

Figure 4.3: (a) Multiple feed column showing feed distributed four times along the column length; b) Subsequent CS breakdown for the distributed column shown in a).

Consequently since one can work below the simple column R_{MIN} and devise a continuous profile path connecting the products by switching to a different profile in another TT CPM, a distributed feed TT overlap is a sufficient condition for feasibility (This is not the case in a simple column).

In principle, one need not plot the whole profile map for an ideal system, but merely trace the TTs to check for feasibility. This can be done easily by equating the DPE to zero, solving for the roots, and connecting them with straight lines. Figure 4.4 depicts the internal TTs resulting from the column configuration shown in Figure 4.3 for four equal equi-molar subfeeds. The CSs and TTs created by solving the DPE for stationary points and simply connecting the points by lines are colour coded to show how they correspond with each other.

Using a conventional column (continuing from the simple column example in Section 4.1), for a distillate composition of [0.90 0.02] and a bottoms light component composition of [0.05], one can use the red rectifying profile and the blue stripping profile to obtain the specified product compositions. Thus the rectifying and stripping profiles (curves from x_D and x_B respectively) represent the lower boundary for the intermediate component composition.

In contrast, if the feed were distributed, one would not be limited to the red and blue profiles to achieve the desired product compositions, because the edges of the TTs would represent the highest attainable intermediate composition.

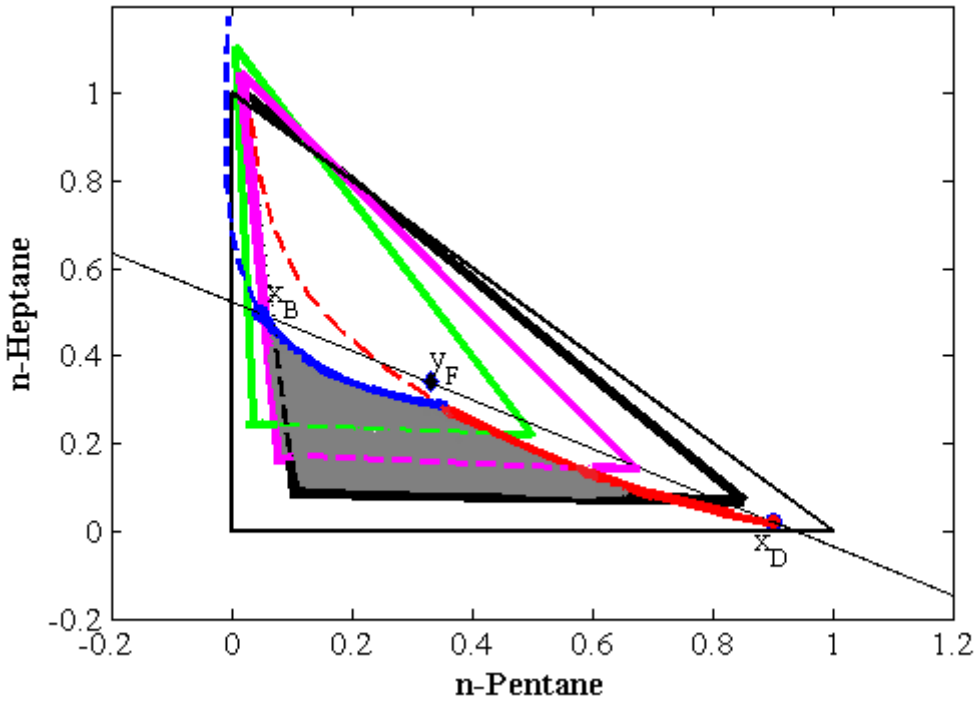

Figure[8] 4.4: Distributed case for a R_{MIN} of 4 for four equal equi-molar sub-feeds for a constant relative volatility pentane heptane hexane system.

[8] Only the internal CS transformed triangles are shown. The TTs are colour coded to correspond with the relevant CS colours in Figure 4.3. The grey shaded area represents the potential operational region resulting from the chosen feed distribution policy: any composition that lies within this region can be obtained. Compositions that lie outside this region cannot be obtained for the particular column configuration, but the possibility that another distributed column configuration might accommodate them cannot be discounted.

The area shaded in grey, which is bordered by the rectifying and stripping profiles and the edges of the TTs, represents the operational region with regard to the reflux ratio and intermediate component composition. All the profiles in the grey shaded region could potentially be used to meet the product specification. This is why the grey area can be viewed as the locus, or attainable region, of all the profiles that can be operated on. For example it can be used to bring about more efficient separation with regards to the intermediate component composition The grey area also substantiates the claim that using distributed feed allows the designer to move into a new composition space, because higher intermediate component compositions that are ordinarily unobtainable in a simple column can be achieved through the profiles selected within the operational region.

4.2.1 Limiting Case of Distributed Feed Minimum Reflux

For any given distributed feed column configuration, there is a certain reflux ratio beyond which separation becomes infeasible. One can characterise such a situation as arising when one TT pinches[9] on another—collinearity of the third component TT edge boundary and the second component TT edge boundary of adjacent TTs (Holland et al., 2010).

[9] Hypotenuse side of one TT is collinear with opposite side of another adjacent TT and no profiles actually bridge through from one TT to the other, they merely just touch.

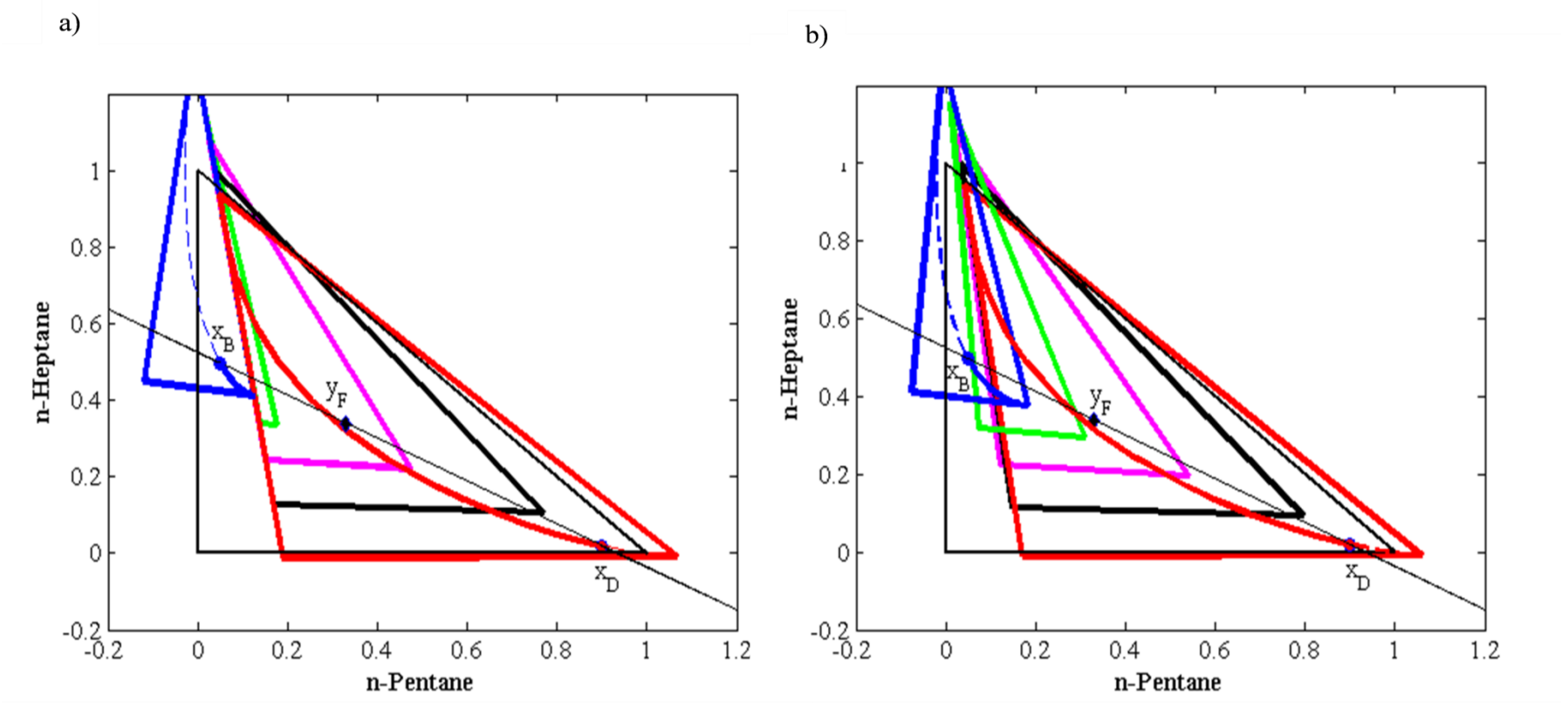

Figure 4.5: a) Minimum reflux scenario for the pentane heptane hexane distributed feed system. Notice how the blue stripping TT pinches on the other column section TTs. A reflux ratio of 2.7 was used. b) Reflux ratio of 3, column section TTs clearly overlapping, even though the operation is carried out below the simple column R_{MIN} of 4.

The reflux ratio that results in such a case can be termed the distributed feed minimum reflux, R_{DMIN}, to differentiate it from the simple column minimum Reflux ratio, R_{MIN}. Consequently to realize the benefits brought about by distributing the feed, the designer can work within the reflux ratio [$R_{DMIN} < R < R_{MIN}$]. Figure 4.5 a) depicts such a case, as the stripping column section TT (blue) pinches on the adjacent column section (CS4) TT. This result was achieved at a reflux ratio of 2.7.

The reader should bear in mind that this kind of TT pinching can occur in any column section TT, depending on how the feed is distributed. In simple columns, the aim is to carry out the operation at above[10] minimum reflux ratio. The same applies in a distributed feed column. Thus a reflux ratio between R_{MIN} and R_{DMIN} can be utilized. A reflux ratio of 3 – i.e. [$2.7 < R < 4$] – was selected to effect the separation. As can be seen in Figure 4.5 b), the blue stripping profile and the red rectifying profile do not intersect, rendering the separation infeasible for a simple column operation. However for the distributed feed scenario, since all the TTs overlap, it is possible to bring about the separation by connecting profiles from different TTs until a continuous path can be traced.

[10] As minimum reflux ratio is approached, the number of stages increases and the compositions of successive stages become closer until the number of stages required becomes infinite (Doherty & Malone, 2001). When the reflux ratio is increased, the plate number decreases, first rapidly then more slowly, until a total reflux value where the number of plates is at a minimum is reached. Since the cross-section of the column is approximately proportional to the vapour flow rate, because the vapour and liquid increase owing to a rise in reflux, a point will be reached at which the increase in column diameter occurs more rapidly than that in the number of plates. thus the fixed costs first decrease then increase with reflux ratio and the heating and cooling costs also increase with increasing reflux (McCabe et al., 1993). Thus a balance has to be struck between fixed charges and operating costs and this is usually at reflux ratio above R_{MIN} usually called the optimum reflux ratio.

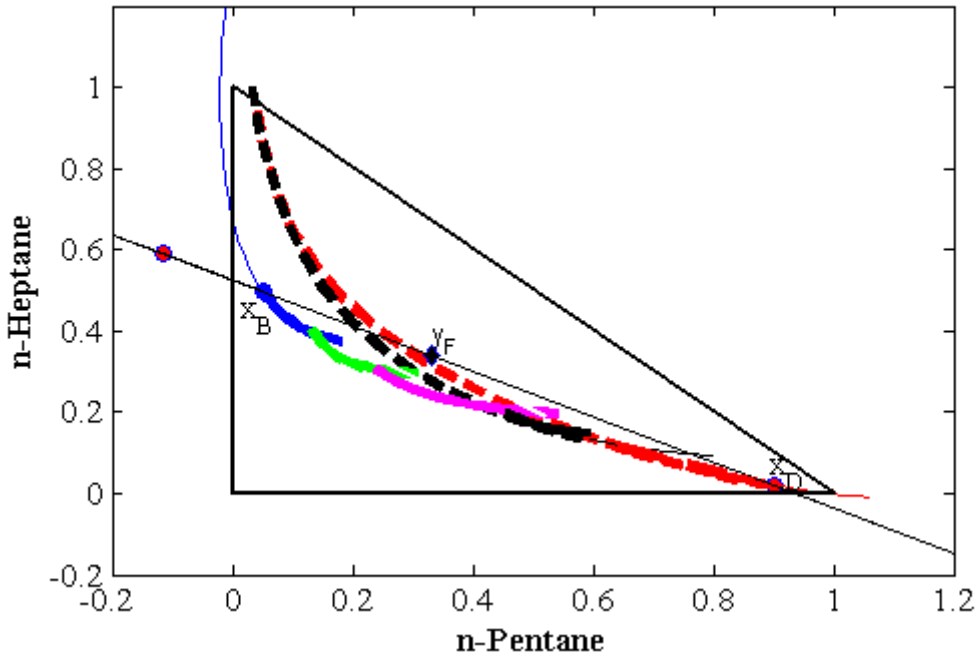

Figure 4.6: Separation is carried at $R_{DMIN} < R < R_{MIN}$ at a reflux ratio of 3; A clear picture of the profile path charted to connect the product compositions by following the solid line profile starting at x_D and terminating at x_B.

An example of connecting profiles to obtain a continuity between the product compositions is shown in Figure 4.6 in which the profiles were selected at random. Each column section profile has a colour corresponding with that of its column section. It is worth mentioning here that the rectifying (red) and stripping (blue) profiles are already set, since the product compositions are pre-defined in the design. This means that these two profiles cannot be manipulated, although those within the operational region resulting from the internal CSs can be, by varying the location of the distributed feed. The solid profiles represent the actual compositional trajectories expected in the column. Starting at the distillate composition (x_D), the red rectifying profile is followed, then the black solid profile in CS2 and changes to the pink solid profile when it intersects with it in CS3. Two further switches take place when it encounters the green solid profile in CS4, and finally follows the blue solid stripping profile upon entering the stripping section. Using this graphical method one can see very clearly how it is possible to operate below minimum reflux, which can bring about substantial savings in energy demand.

4.2.2 Determining Split Ratios

For a distributed feed column with two sub-feeds, where one of them is charged at the bottom (thus resulting in 2 CSs), it is possible to determine the feed split ratios (in other words, how to divide the feed) required to get a certain product specification, provided the distillate product composition and its ensuing rectifying profile are known.

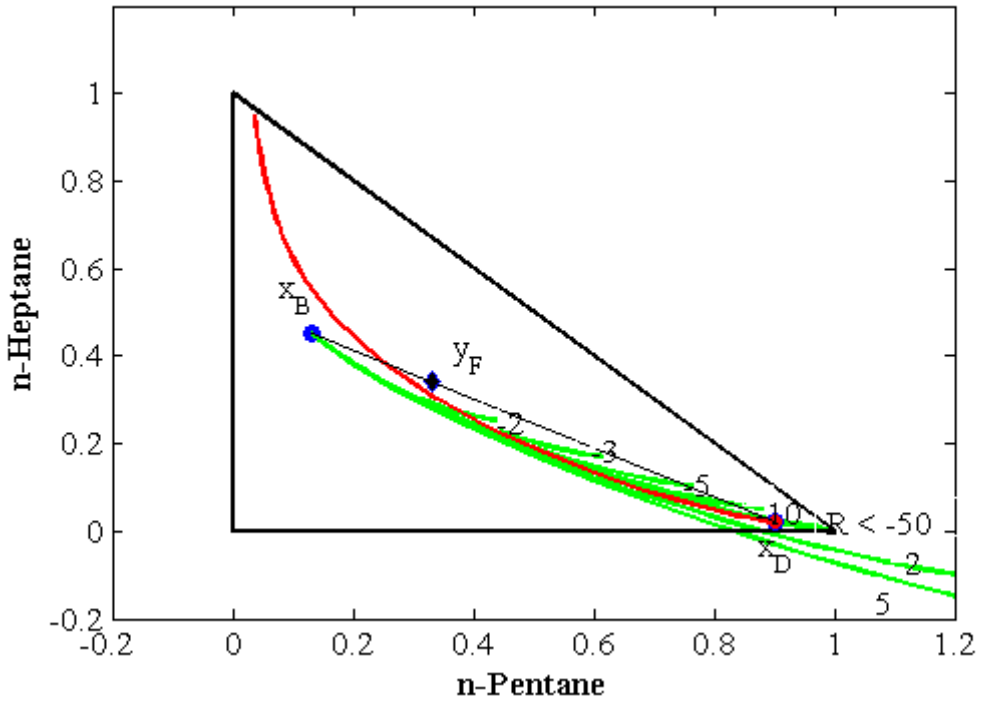

Figure 4.7: Feed split ratios can be determined by varying R_Δ values of the internal CS which lies above the bottom feed using Equation 2.

Values of R_Δ that will give the required bottoms composition can be established by varying the R_Δ values for the bottom CS and plotting the profiles starting from the specified bottoms product composition. The reflux ratio in a CS (*k+1*) can be determined from the CS above it (*k*) by mass balance:

$$R_{\Delta k+1} = \frac{R_{\Delta k}\Delta_k + F_k q_k}{\Delta_{k+1}} \qquad (2)$$

The green profiles in Figure 4.7 demonstrate the method for determining split ratios. This gives the designer options as to which profile to use, depending on such criteria as intermediate component composition and stage requirements. The sub-feed flow rates can be back-calculated using Equation 2 provided the quality of the sub-feed – *q* – is known and in this example it was taken as zero since it was a vapour feed. The method also allows one to determine the minimum and maximum allowable values of R_Δ that give the desired product specification, making it possible for the designer to know the range of split ratios that can yield the specified product. For the case presented in Figure 4.7, the range $-2<R_\Delta<-50$ will guarantee split ratios that can effect the separation. Any value lying outside this range will make the separation infeasible, as a continuous profile between the product compositions will not exist.

4.2.3 Sharp split - Non sharp split Separation

The writer is in no way advocating the superiority of distributed feed columns over simple columns for all cases, but instead arguing that in a situation where a

non-sharp split product composition is specified, the designer should consider utilising distributed feed because this method offers considerable benefits. For sharp split separations, distributed feed offers no advantage, since the profiles will simply run along the MBT edges (in the saddle node) and the stage requirement will be the same as that for a simple column. The designer is limited to the simple column minimum reflux values, regardless of how the feed is distributed. Thus one might as well use a simple column configuration for sharp split separations, as explained in detail by Beneke et al. (2012b).

5 Results and Discussion

In process engineering, simulation is widely used as a basic tool in the design and analysis of unit operations like distillation columns, as it is the key to the successful evaluation of a process (Parkash, 2003). Accurate simulation modelling requires extensive knowledge and understanding of the process and the equipment to be modelled. The designs presented in this paper rely heavily on simulation modelling to establish heat and material balances. For all the examples presented, the stage numbers are counted from the top to the bottom of the column.

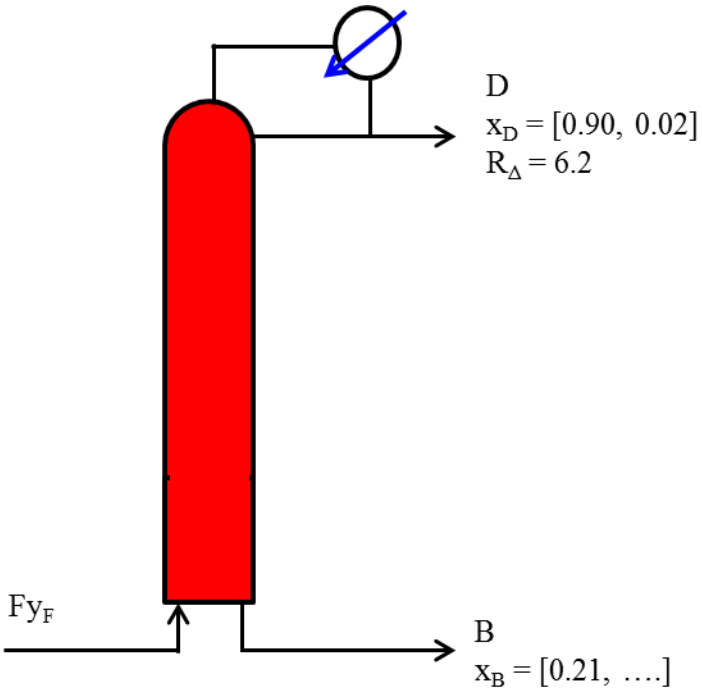

Figure 5.1: Rectifying column section representing the Simplified ACDU.

5.1 Feasible Separation

In this example we consider producing a distillate with a mole fraction of 0.90 heptane and 0.02 pentane from a 1kmol/s equi-molar vapour feed of pentane, heptane and hexane. (The mole fraction of hexane in the distillate can be obtained by mass balance and is therefore 0.08). Firstly, let's consider the case where we put all the feed in at the bottom of the column as shown in Figure 5.1, and then we compare this to a case where we add the feed at a number of points along a column.

5.1.1 Base Case 1: Single Feed of 1kmol/s added at the bottom of the column as shown in Figure 5.1

For illustrative purposes, the case with which we started was a base case with a single saturated vapour feed of 1kmol/s added as a single feed at the bottom of the column. In an attempt to mimic the ACDU, we specified a non-sharp split distillate composition in the CPM simulation. We selected a distillate composition of [0.9 0.02], where the former represents the light component (pentane) and the latter the heavy component (heptane). The third component composition, which denotes the intermediate boiler (hexane), can be calculated from a mole fraction balance.

A reflux ratio of 6.2 was arbitrarily chosen for the CPM simulation. The bottoms composition $\underline{x}_B$ was determined by locating the point where the mass balance line

(i.e. the line through the distillate $\underline{x}_D$ and feed compositions $\underline{y}_F$) intersects the column profile curve.

The CPM simulation showed that roughly 3.7 stages were required to obtain the specified distillate product composition of [0.90, 0.02] for the selected reflux ratio of 6.2. Since we are dealing with a single rectifying profile where x_B can change in relation to the reflux ratio chosen, there are no profile pinches to talk about and the concept of minimum reflux becomes redundant. Instead we can talk about "the reflux ratio" that will give a particular bottoms product composition.

It stands to reason that the stage number requirement for a less than pure product composition will be less than that of a purer product composition in a scenario where we are dealing with only a single rectifying profile owing to the absence of pinch points along the profile.

Aspen Plus takes only integer values for stage number, thus 3.7 stages could not be specified and we instead chose 4 stages. In an Aspen Plus RadFrac Simulation with no reboiler, by default we were able to manipulate only two variables, the stage number in combination with either the distillate/bottoms flow-rate or the reflux ratio. The latter are mutually exclusive variables (that is, they cannot be specified at the same time).

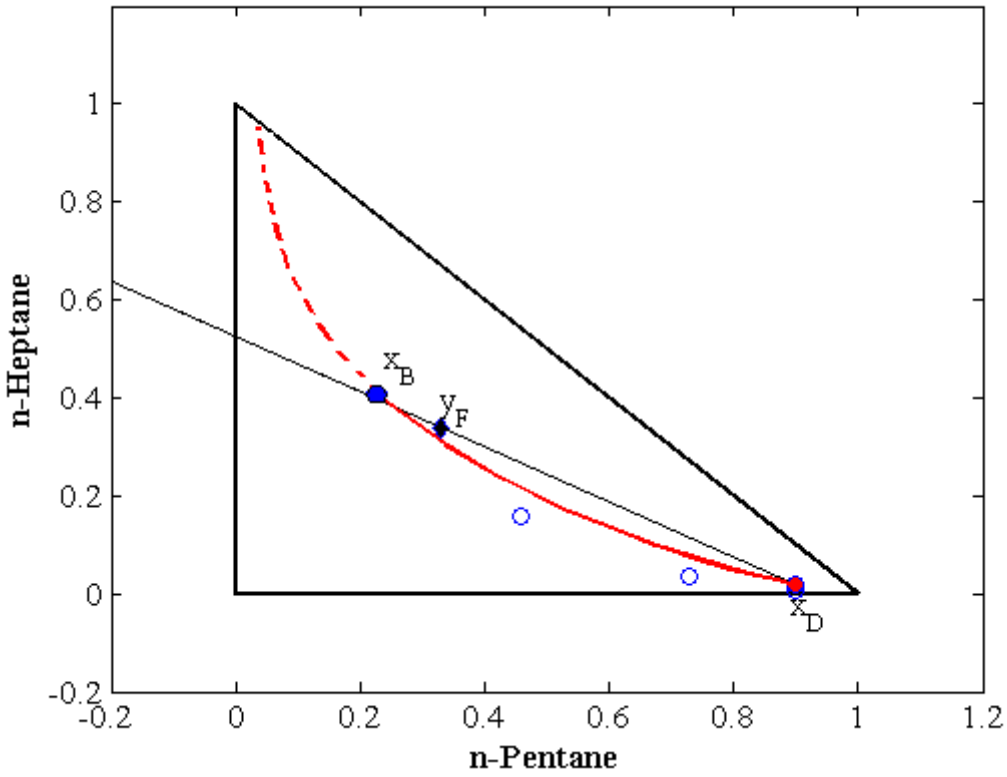

Figure 5.2: Rectifying column profile (red) for the configuration in Figure 5.1, connecting the product compositions and a superimposed Aspen Plus Profile (blue circular markers). The external reflux ratio is 6.2.

We specified the CPM reflux ratio of 6.2 and stage number 4 in the Aspen Plus simulation and we obtained distillate and bottoms compositions that were similar to the CPM results. A standard deviation of 0.012 was calculated for the specified CPM and obtained Aspen Plus distillate compositions. The distillate flow-rate and bottoms composition were respectively found to be 0.166 kmol/s and [0.21, 0.38] for both CPM and Aspen Plus simulations. The red rectifying profile shown in Figure 4 is the Column Profile curve that represents the operating profile to be followed to achieve the distillate product composition specification and the subsequent bottoms product composition achievable.

For verification purposes, we superimposed the Aspen Plus profile on the CPM as shown on Figure 4, where the Aspen Plus profile is represented by the blue circular markers. The profiles follow the same trend, and give similar products.

5.1.2 Example 1 (a): Sub-Feeds of [0.3, 0.4, 0.3] kmol/s utilized in Figure 5.3 configuration.

The first distributed column example investigated was achieved by configuring the column as shown in Figure 5.3 a). This was achieved using a total feed flow-rate F, of 1 kmol/s saturated vapour feed as before and partitioning it into sub-feeds of [0.3, 0.4, 0.3] kmol/s. The reader is reminded that there is a large number of possible ways to distribute the feed (varying the sub-feed flow rates, the number of sub-feeds, the feed stages, the sub-feed quality, or simultaneously varying them all, no attempts have been made to optimise the system).

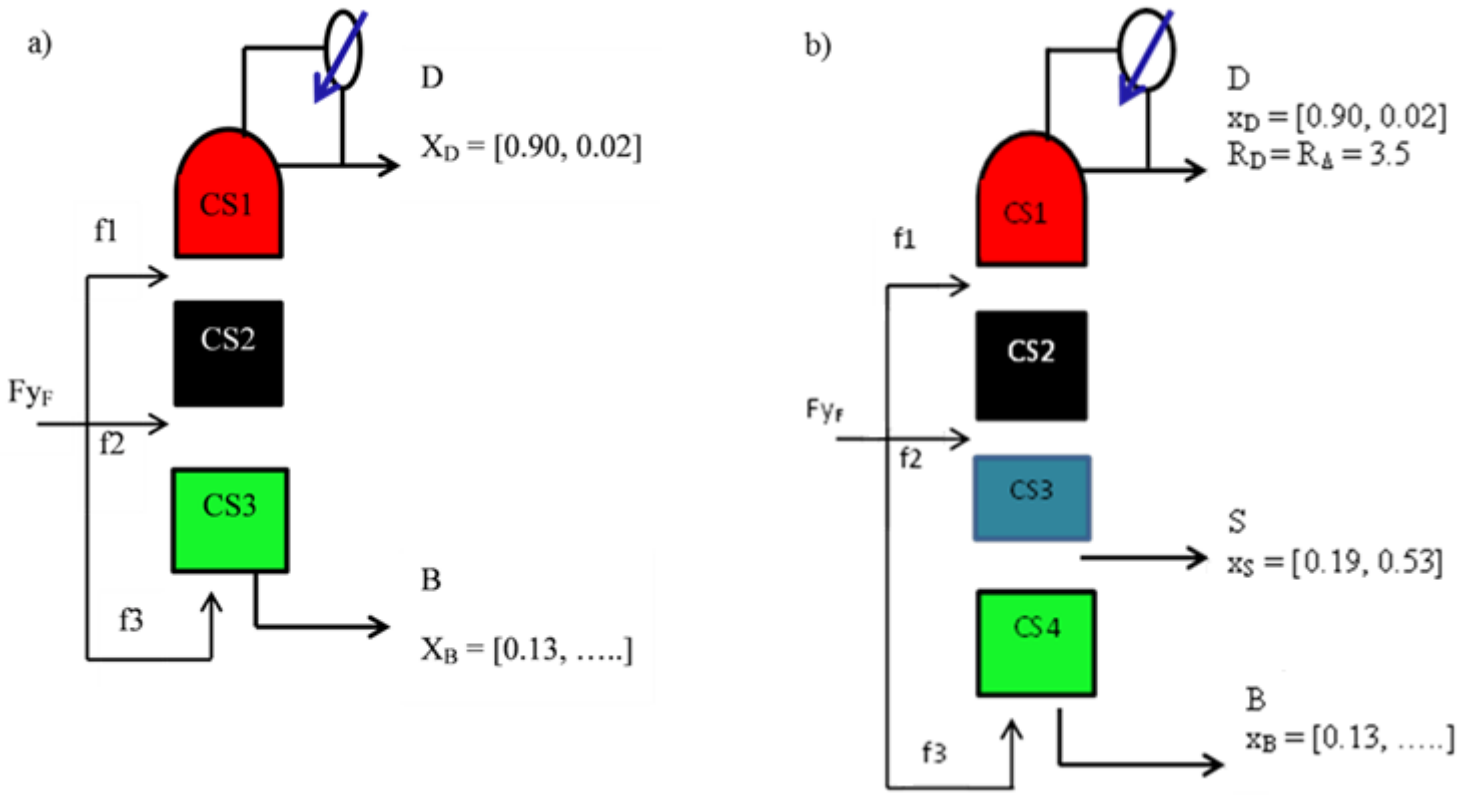

Figure 5.3: a) CS breakdown for three sub-feeds of [0.3, 0.4, 0.3] kmols/s b) subsequent CS breakdown when a side draw is added.

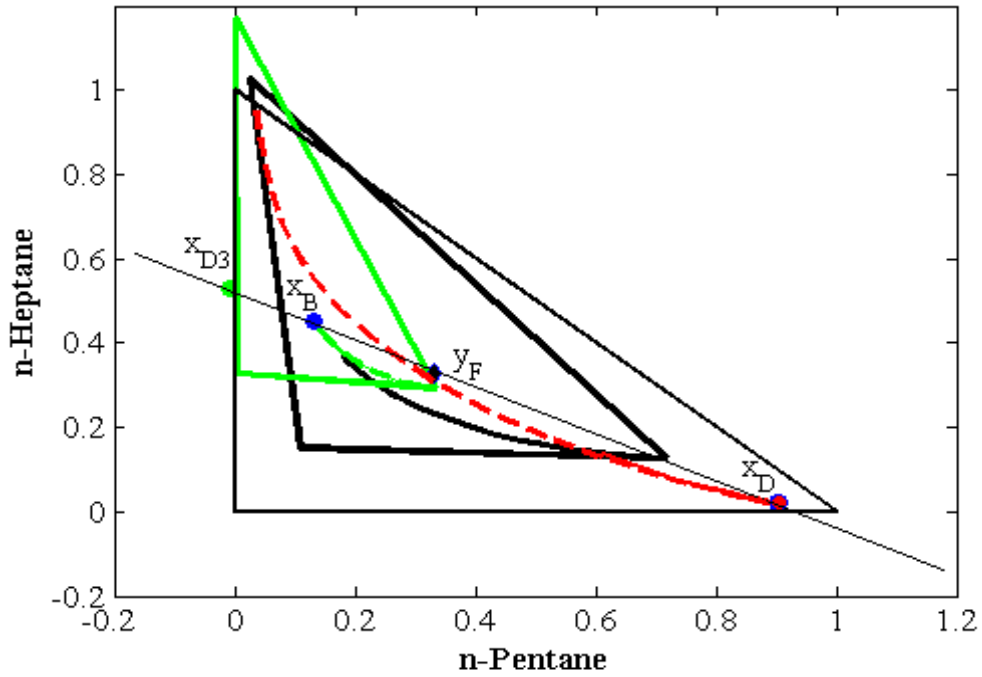

Figure[11] 5.4: Red rectifying profile (CS1), black profile (CS2), green profile (CS3) giving a continuous profile plus the Resulting Transformed Triangles (TT) for CS2 (black) & CS3 (green) with reference to Figure 5.3a configuration.

[11] $X_{\Delta 3} = x_{D3}$ is the third CS difference point whilst $X_{\Delta 1} = x_D$ is the first CS difference point It is possible to get an internal column section X_Δ that lies outside the mass balance triangle, these X_Δ compositions can sometimes have negative values, the movement of these X_Δ parameters can also be tracked within and outside the MBT for ternary systems (Beneke et al., 2012).

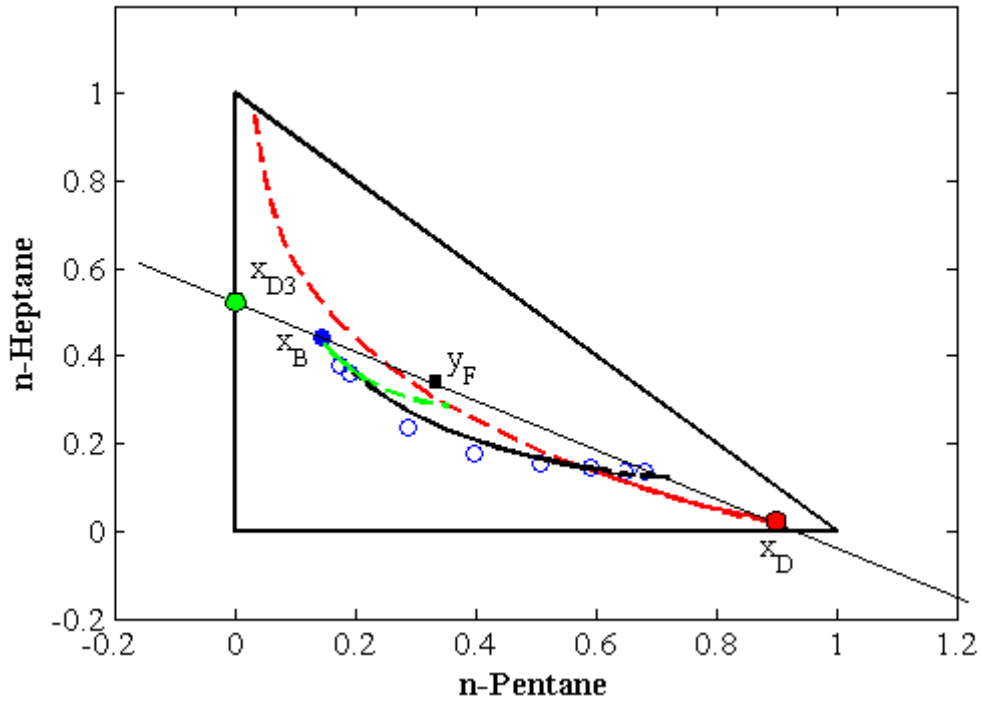

Figure 5.5: Aspen Plus profile (blue circular markers) superimposed on the CPM profiles with reference to Figure 5.3a configuration. xD = The external reflux ratio is 3.5.

As shown in Figure 5.3 a), three CSs are created, of which two are internal column sections (indicated in black and green in Figures 5.4 and 5.5). One other major advantage offered by the CPM method is that it makes convenient, the location of ideal feed stages for the respective sub-feeds. This can be easily done by simply counting off stage numbers from either x_{Bi} or x_{Di} till one gets to a point where two profiles from adjacent column sections intersect. The counting is then discontinued and started again from one along the new intersecting profile. The number of stages counted for each profile, are the stage number requirements for the respective CSs. The total number of stages is given by the summation of all the stage numbers along the profiles till the product compositions are connected.

The direction of the liquid profiles is such that we commence at the top of the column with a composition x_D, moving down the column. Thus, we follow the movement of the profile for CS1 (red in Figures 5.4 and 5.5) from x_D. Upon entering the second column section (brought about by the addition of feed, f1), the profile will switch to the black profile as clearly shown in Figure 5.5. Now, following a completely new path, the profile will switch again, to the green profile, on entering the third column section, until it reaches the bottoms product composition as shown on Figure 5.5.

It was found that by distributing the feed three times, a reduced reflux ratio in CS1 of 3.5 could be used for the same distillate product composition. As each column section in this example operates at a different reflux and difference point, we refer

to the reflux ratio of CS1 as the external reflux ratio. Each CS created has its own unique X_Δ and R_Δ which defines its composition space and the X_Δ's do not necessarily have to lie within the MBT. The green circular marker in Figure 5.5 represents $X_{\Delta 3}$ which is the X_Δ for CS3, the X_Δ for CS2 cannot be seen because it lies outside the MBT in negative space. All the X_Δ points lie on the mass balance line for any distributed feed scheme as can be observed in Figure 6 for $X_{\Delta 3}$. From the CPMs we established the points where the sub-feeds were to be introduced along the column: f_1 of 0.3 kmols/s on the 2nd stage, f_2 of 0.4 kmol/s on the 10th stage and f_3 of 0.3 kmol/s on the 12th stage (bottom stage) stages respectively. The internal Column Sections CS2 and CS3 subsequently have R_Δ values of -22.5 and -2.06 respectively due to the addition of f_1 and f_2. Furthermore, the CPM simulation indicated that the bottoms product composition could be moved further along the mass balance line to a composition of [0.13, 0.41]. This would reduce the amount of light component lost in the bottoms product, and simultaneously increase the distillate flow-rate from 0.166 kmol/s in the Base Case – Section 5.1.1Example 1(a) to 0.260 kmol/s in this case. This confirms the hypothesis that an improvement in fractionation can be achieved using distributed feed.

To validate the results, we exported the CPM parameters to Aspen Plus, where the same configuration was set up and simulated. The Aspen Plus profile in Figure 5.5, which is shown as the blue profile (circular markers) was overlaid on the Matlab profile, and, as can be observed, there is definitely a good agreement between the two results. The slight deviation between the CPM and Aspen Plus profiles can be attributed to the simplifying assumption of constant molal

overflow (CMO) made in the CPM simulation and the fact that the feed stages and stage numbers are not exactly matched.

The condenser duty, internal flows and internal column profile compositions were taken (can be obtained from CPMs as well) from the Aspen Plus simulated results.

The simulation of Figure 5.3 (three feed scheme) compared to Figure 5.1 (single feed) in Aspen Plus showed that even though the reflux ratio was substantially reduced, there is only a slight decrease in the condenser duty. This is because there is a marked increase in distillate flow-rate, from 0.166 to 0.260kmol/s. The duty was reduced by 1.5% from a value of 32.16MW to a value of 31.69MW.

There is a marked improvement in the intermediate component composition that could be achieved from the column: from a maximum value of 0.38 in the single feed scenario to a value of 0.53 using distributed feed. Thus, by its nature, distributing the feed gives one the flexibility to draw a particular intermediate component composition, which is desired in crude oil separations, and would ordinarily not be practical using a single feed.

For example, using the configuration depicted in Figure 5.3 b) and drawing a side product of 0.10 kmol/s on the 9th stage a product composition of [0.19, 0.53] is obtained which is the highest intermediate component composition that is achievable for the particular column setup.

The distributed feed operates at a lower reflux ratio of 3.5 as compared to a value of 6.2 for the base case. (We will consider the situation when operating the base case at a reflux of 3.5 in Base Case 2 – Section 5.2.1). It was also observed that distributed feed operates with 12 stages which is expected considering the fact that it gives the designer more options to play around with feed stages, in contrast to the case of four stages where the designer is limited as to the alternative distributed feed configurations one can utilize.

5.1.3 Example 1 (b): Three Sub-Feed Column [0.2, 0.2, 0.6] kmol/s

The column configuration for Figure 5.6 is similar to that shown in Figure 5.3 a). However, Example 1(b) illustrates how one can move to new composition space by varying the distributed feed scheme flow rates. Sub-feeds of [02 02 0.6] kmol/s were fed on the 2nd, 5th, and 10th stages, and the ensuing profiles are shown in Figure 5.6. As in Figure 5.5, the rectifying profile in CS1 switches to the black profile in CS2 when the two profiles intersect, and then changes to the green profile in CS3. The highest intermediate composition that can be drawn is approximately 0.55, whilst that for a feed scheme of [0.3 0.4 0.3] was roughly 0.53, compared with a highest intermediate composition of 0.38 for a single-feed column (base case). This can be translated as improvements of 30% and 25% with respect to the base case of a single-feed column, and an overall improvement of about 2% between the alternate distributed feed schemes. If one takes this same configuration and compares it with the base case, the former reduction offers a

saving of the approximately 1.7% in energy consumption, remembering that there is a marked increase product flow-rate.

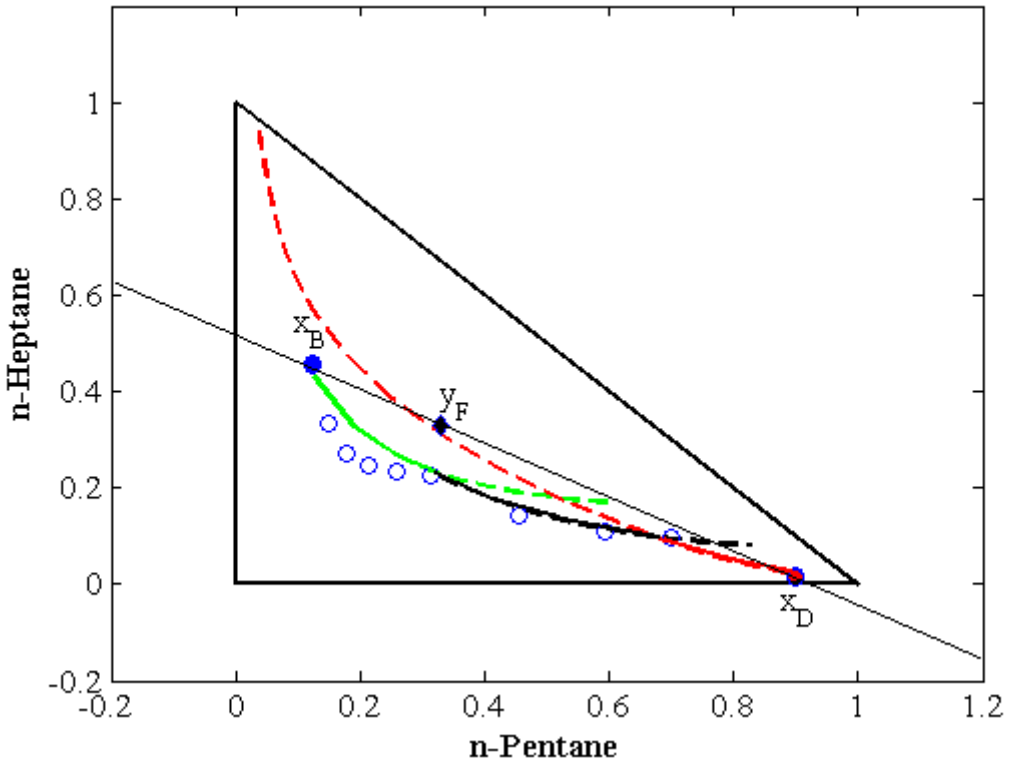

Figure 5.6: Matching the Aspen Plus (blue circular markers) with that of the Matlab profile obtained by changing the sub feed flow rates [0.2, 0.2, 0.6] for the same configuration shown in Figure 5.3 a).

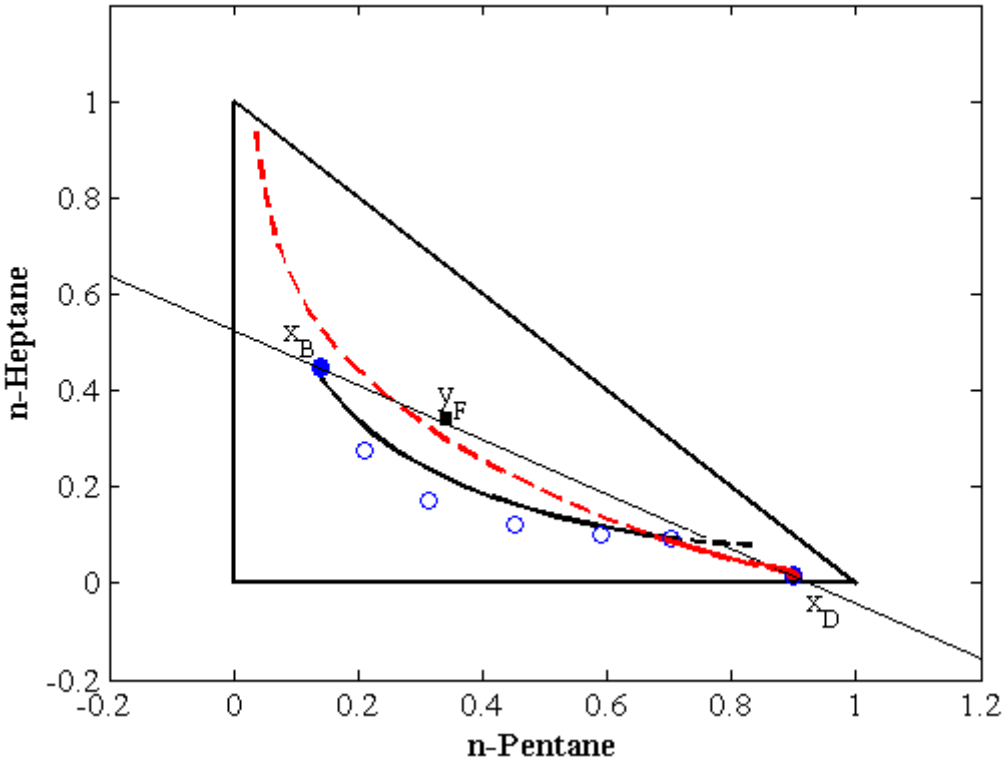

Figure 5.7: Aspen Plus (blue circular marker) and Matlab profiles resulting from distributing the feed twice: sub-feed [0.2, 0.8] kmol/s.

5.1.4 Example 1 (c): Two Sub-Feed Column with flow rates [0.2, 0.8] kmol/s

Again, when one considers a two-feed column with sub-feed flow rates of [0.2, 08] kmol/s fed on the 2nd and 7th (bottom) stages, the result is a single internal column section. Figure 5.7 is a representation of the two feed column profiles obtained from a Matlab CPM simulation (shown by a solid line) and the resultant Aspen Plus profile (see the blue circular markers) superimposed on the former. As expected, the CPM profile matches that of Aspen Plus with a slight deviation which can be attributed to the constant molal overflow assumption which formed part of the Matlab simulation.

In this case the reduction in energy consumption is also about 1.7%, and an increase in the intermediate component composition to a value of 0.51. In general, this result is similar to that in Example 1(a), although the number of stages differs: 12 stages for Example 1(a). and seven for example 1(c). The whole point of this exercise—comparing Examples 1(a) to (c)—was to show that the designer should not be constrained to a few feed regimes, because it is possible to find feed configurations that can bring about substantial improvements by way of saving energy consumption, raising product flow rates and the operational region topography.

Table 5.1: A comparison of the results of the various distributed column configurations with the base of a single bottom feed for the three-component system of pentane, heptane and hexane, using the same feed flow rate and with the same feed composition. Note the energy consumption per distillate flow rate in the last column**.**

Case	Feed Split (Kmol/s)	Condenser Duty (MW)	Distillate (Kmol/s)	Reflux Ratio	Highest Intermediate Component composition	Intermediate Component Deviation %	Distillate Rate Deviation (%)	Energy Consumption per Distillate Flow-rate (MW/Kmol)
Base	[1]	32.16	0.166	6.2	0.38	-	-	194
1(a)	[0.3,0.4,0.3]	31.69	0.259	3.5	0.51	25.5	35.9	122
1(b)	[0.2,0.2,0.6]	31.62	0.266	3.5	0.55	30.9	37.5	119
1(c)	[0.2,0.8]	31.62	0.266	3.5	0.55	30.9	37.5	119

With reference to Table 5.1, it is evident that using distributed feed opens up the opportunity to raise the distillate flow rate. For a single rectifying section with one feed at the bottom (base case), the distillate flow rate was found to be 0.166 kmol/s and for a distributed feed column with three sub-feeds, to be approximately 0.260 kmol/s, representing an average improvement of 35% in the distillate flow rate.

Of particular relevance are the impressive numbers that were obtained when a condenser duty per distillate flow-rate comparison was done for the base case and the distributed feed case. A reduction from 190MW per mol/s to roughly 119MW per kmol/s was observed for the distributed feed case and this translates to a 37% reduction in condenser energy consumption per unit of distillate produced. This implies that considerably less energy is required to produce a unit of the specified distillate product. This leads to reduced operating costs as well as an increase in revenue due to the increased product output.

Compared to the base case of 4 stages there is an initial expected escalation in capital cost, but this disadvantage can be offset by the fact that there is an increased distillate flow rate, which is directly tied to the profits, plus a large saving in energy consumption, which will reduce the operating costs. Furthermore, improvements in the intermediate component composition contribute to the potential advantages offered by this method.

5.2 Infeasible Separation

5.2.1 Base Case 2: Single Bottom Feed (equi-molar) of 1 kmol/s in the configuration as shown in Figure 3:

To illustrate further the benefits that can be gained by distributing the feed, we now take a base case with a single rectifying section (one feed at the bottom, as shown in Figure 5.1), operating at a chosen reflux of 3.5. As shown in Figure 5.8, if we use a reflux ratio of 3.5, it would be impossible to achieve the specified product composition, as the rectifying profile is above the mass balance line and does not cross the MBT line on either side of the feed point. Thus the potential bottoms compositions which could lie on any point along the MBT line length depicted by the double arrow are not realizable. There is no profile that connects the distillate and bottoms product compositions at the chosen reflux, rendering the separation infeasible.

5.2.2 Example 2: Three Equi-molar sub-feeds of [0.1, 0.4, 0.5] kmol/s fed in Figure 8 configuration.

Nevertheless, the situation mapped in Figure 5.8 can be remedied by applying distributed feed, which in this case involves sub-feed flow-rates of f1 = 0.1 kmol/s that is fed to the 1st (top) stage, f2 = 0.4 kmol/s is fed to the 6th stage and f3 = 0.5 kmols/s is fed to the 10th (bottom) stage.

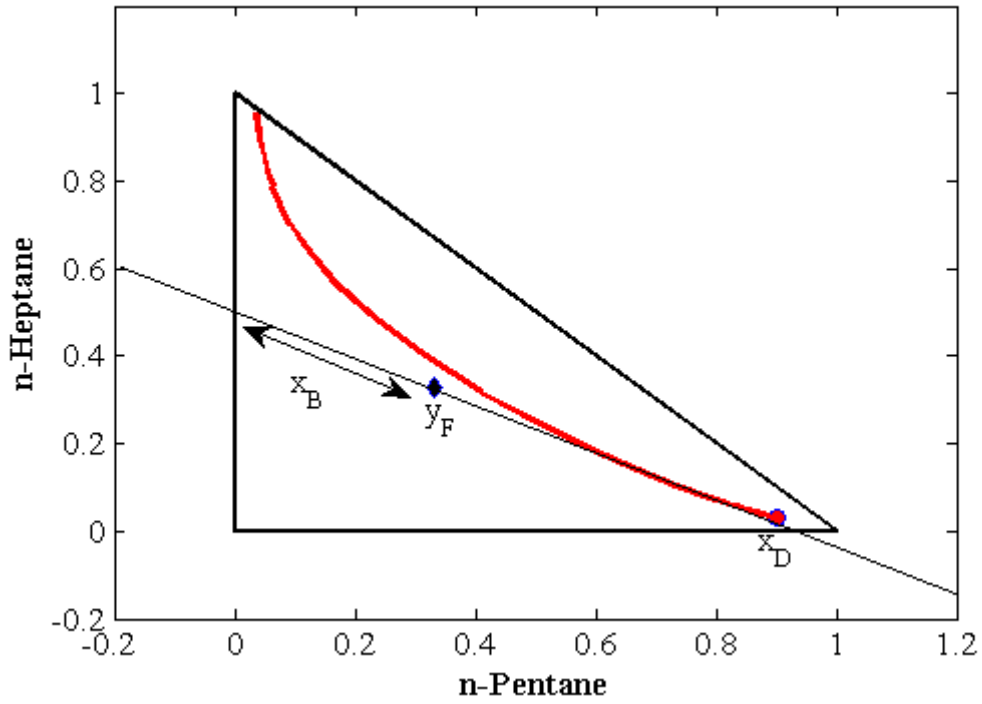

Figure 5.8: Infeasible separation for given x_D of [0.9, 0.03] and x_B of [0.13,...] and a column operating at a reflux (R_D) of 3.5.

This creates two column sections, as depicted in Figure 5.9. The same external reflux from Base Case 2 (of 3.5) was used. Upon introducing a feed of 0.1kmol/s on the first stage, the liquid composition at the top of the column commences at composition x_D. However the effective reflux ratio of CS1 is modified by the addition to f1 and is 5.7, giving rise to the black profile map in Figure 5.10. At the end of CS1, a second feed of 0.4kmol/s is introduced, and the subsequent CPM at a reflux ratio of -3.8 is shown in green. The black and green operational profiles for the respective CSs (CS1 and CS2) used are clearly shown in Figure 5.11. The green profile from CS2's CPM will pass through the bottoms product composition marked by the blue circular marker thereby satisfying the continuous profile criterion.

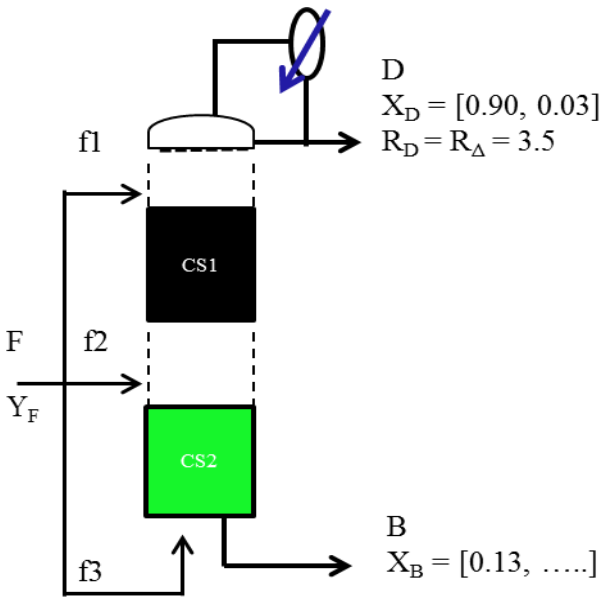

Figure 5.9: Column configuration (three sub-feeds) to achieve the specified product compositions in Base Case 2.

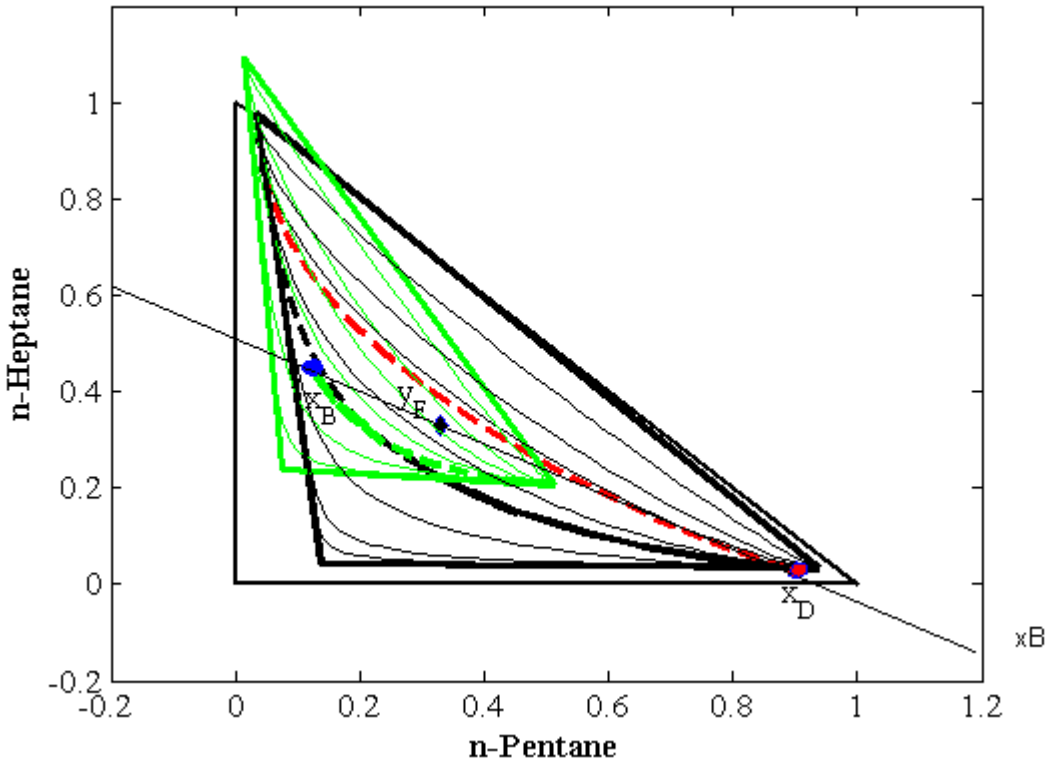

Figure 5.10: TTs from the two internal CSs (CS2, CS3), showing the CPM for each CS and the path/profile operated on (thick solid profile) to achieve the given distillate and bottoms product.

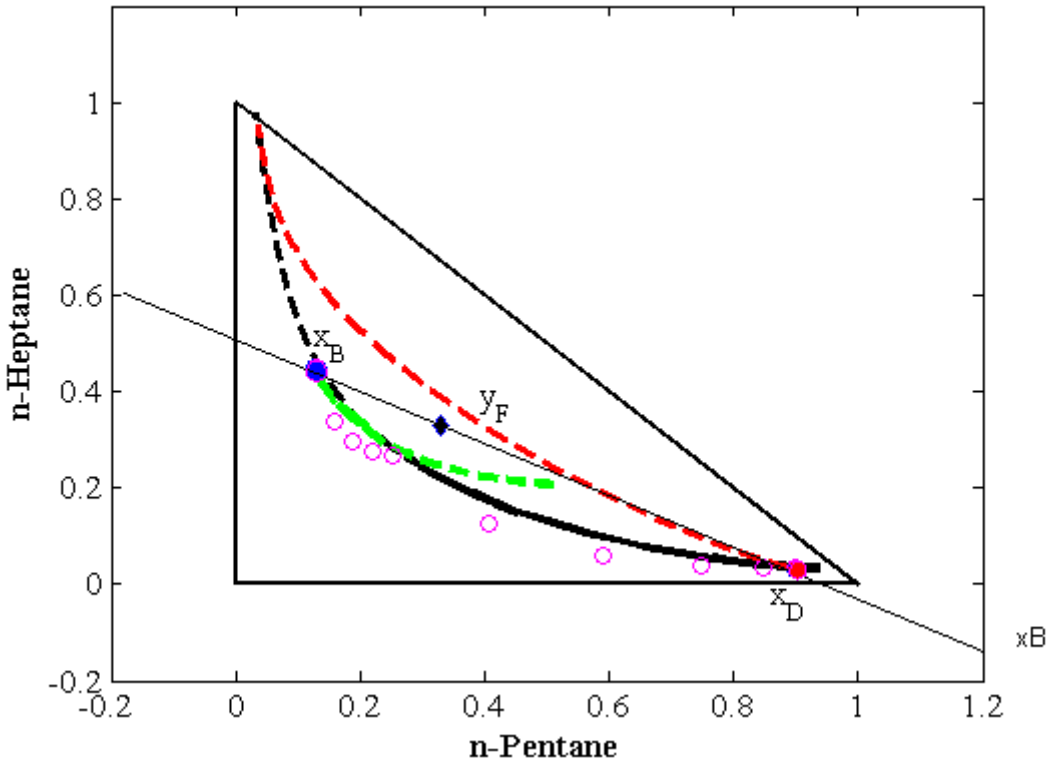

Figure 5.11: Congruity between the profiles derived from Aspen Plus (pink circular markers) and Matlab (solid black & green) profiles after distributing the feed three times for sub-feed flow rates of [0.1, 0.4, 0.5] kmol/s.

To support our claims regarding the advantages of the distribution method, we entered the same simulation parameters used for the CPM into an Aspen Plus simulation. The results were in good agreement, as can be observed in Figure 5.11, where the Aspen Plus profiles (pink circular markers) are superimposed on the CPM profiles. The slight deviation between Aspen Plus and CPM profiles can be attributed to the simplifying assumption of constant molal overflow made in the CPM method and the fact that the feed stages are not precisely matched. (Aspen Plus-RadFrac does not assume constant molal overflow.)

When considering the results we obtained thus far in Example 1, we noted that the condenser duty was not a strong function of reflux rate (R_D), largely because the vapour flow rate in the column and into the condenser remains almost constant for any reflux ratio. This fact can be established by looking at how the Distillate (D) varies with the bottoms composition (x_{Bi}) by using the generic function: $D = F(x_{Fi}–x_{Bi})/(x_{Di}–x_{Bi})$ which shows how D and x_{Bi} are inversely related, implying that an increase in x_{Bi} results in a decrease in D and vice-versa (applicable only when x_{Di}, F and x_{Fi} are kept constant). Since the vapour (V) flow-rate is given by $V = L + D$, when D decreases there is a corresponding increase in L leading to an increased reflux ratio (R_D) or the opposite in the case of an increasing D. With these opposing effects transpiring, the result is a pseudo balancing outcome giving rise to vapour flow-rates that are almost similar for any reflux ratio utilized. This should prompt the designer to pose the question: Are there other feed distribution options that might reduce the vapour flow-rate to the condenser, thus decreasing the condenser duty?

5.3 Varying the Quality of the Sub-feeds

5.3.1 Example 3: Manipulating base case 1

As mentioned earlier, it is the convention when using an ACDU to take a vapourised or partially vapourised feed from the bottom of the column, but we asked the question: What if the feed criterion was changed to allow for a liquid sub-feed as well?

This example investigates a variation of distributed feed, where the thermal condition of the sub-feeds *q* (molar fraction of feed that is liquid), is altered. If the sub-feeds originate from the same feed source, no variations in sub-feed compositions can be expected.

The distributed feed variation we tested can have practical applications in the ACDU since, as the feed passes through a furnace before entering the column, we could introduce a change by creating a bypass that would prevent a portion of the feed from entering the furnace. By so doing we reasoned that a reduction in both furnace and condenser duty could be expected. Once again, the ternary system of pentane, heptane and hexane was used for the comparisons. Other factors are listed below.

- For demonstrative purposes, we took the distributed feed configuration in -Figure 5.3 a).–Example 1(a) as the base case, and used the simulation results already obtained. (To summarize, in Example 1(a) a saturated

vapour feed split of [0.3, 0.4, 0.3] kmol/s was utilized, and the corresponding sub-feeds were fed on the 2nd, 10th and 12th stages, respectively). Aspen Plus was used to model the cases where the thermal state of one of the sub-feeds was altered.

- A liquid to vapour split ratio of 0.30/0.70 was used. All the liquid was fed on the 2nd stage, and the vapour was fed on 10th and 12th stages at a feed rate of [0.40, 0.30] kmol/s respectively.
- In the first scenario, a saturated liquid feed stream was fed on the 2nd stage, whilst in the second, a sub-cooled liquid feed stream at ambient temperature was fed on the 2nd stage, where the ambient temperature was assumed to be 298°K.

In all three cases (that is, the base case and the two liquid to vapour split cases) we investigated, there was no variation in the observed product compositions and flow-rates, hence our conclusion that the examples can be compared with each other.

In the split cases the reflux ratio was reduced from a value of 3.9 to 2.4 and 2.1 respectively for the saturated liquid stream and the sub-cooled liquid feed stream, and a marked decrease in condenser duty could also be seen: a 31% drop in the former and a 38% reduction in the latter at ambient temperature. We can thus state with confidence that energy savings can be made by using distributed feed. Table 5.2 gives a summary of the results.

Table 5.2: Comparison of total vapour Distributed feed with liquid and vapour distributed feed configuration for the pentane heptane hexane system for the same feed flow-rate. Note the reduction in the condenser duty.

Case	Top sub-feed Quality	Top Sub-feed Temp (K)	Top Feed Stage No.	Reflux Ratio	Distillate Composition (pent, hept)	Condenser Duty (MW)	Distillate Rate (kmol/s)	Condenser Duty Deviation (%)
Base	Saturated Vapour	351.9	2	3.9	[0.90, 0.0196]	-31.5	0.236	-
1	Saturated liquid	331.0	2	2.4	[0.90, 0.0196]	-21.7	0.236	31
2	Subcooled liquid	298.0	2	2.1	[0.90, 0.0196]	-19.6	0.236	38

5.3.2 Example 4: ACDU

The distributed feed ideas presented in this dissertation can be extended to a multicomponent mixture without the need for any additional assumptions. Evidence to substantiate this claim is provided below, where a synthetic crude comprising paraffinic hydrocarbons ranging from C5–C30 was considered. The reader is reminded that the spectrum of hydrocarbons can go up to and above C60 for some crude oils). A PetroFrac Unit was selected to model the basic ACDU in Aspen Plus and an ideal thermodynamic model was used for the simulation. As mentioned previously, an ACDU traditionally takes a vapour or partially vapourised feed from the bottom and fractionates it into various distillate products (top and side products).

In normal distillation columns, heat is added to the column from a reboiler and removed by an overhead condenser. Part of the condensed distillate is returned to the column as reflux to aid fractionation. The reboiler approach is not feasible in crude distillation, because the resulting increase in the product temperature may lead to the chemical decomposition of the heavy products. Stripping steam, side strippers and pumparounds (inter-condensers) are also an integral part of the column, as they are instrumental in improving fractionation, heat recovery and maintaining uniform vapour and liquid loads in the column. In an effort to reduce the complexity of the column and to focus on the effect of feed distribution, side strippers and pumparounds were not considered. The column with no reboiler was chosen—None-Bottom-Feed reboiler column since reboilers are not employed).

A schematic diagram of the simplified ACDU is shown in Figure 5.12. There were no attempts made to optimise the column in terms of either the way the feed is split or the position of the sub feeds, etc. The purpose of this example is merely to illustrate that there is substantial room for improvement by distributing the feed.

The tower was simulated with 15 theoretical stages, and operated at a pressure of 1.5 atm. Since what was being proposed in this simulation was not a complete redesign of ACDUs but rather a retrofitting of old ACDUs, we decided to keep the stage number constant for all the variations of distributed feed that were tested. One of the ways used to define a crude oil product slate is specification of certain ASTM distillation temperatures, since the various hydrocarbon fractions are drawn from the tower according to their specific boiling temperatures (Watkins, 1973). The separation was defined by 3 different distillate fractions of petrol, kerosene, diesel and a bottoms product. The various fractions were drawn off from the column top, 5th stage, 10th stage and the column bottom respectively.

Using the design specification tool, we followed an ASTM 95% temperature specification (temperature where 95% by volume of a cut is assumed to have vaporised) to control the petrol and diesel product quality by manipulating their respective flow-rates. The ASTM 95% temperatures used for the petrol and diesel cuts were 466K and 538K respectively.

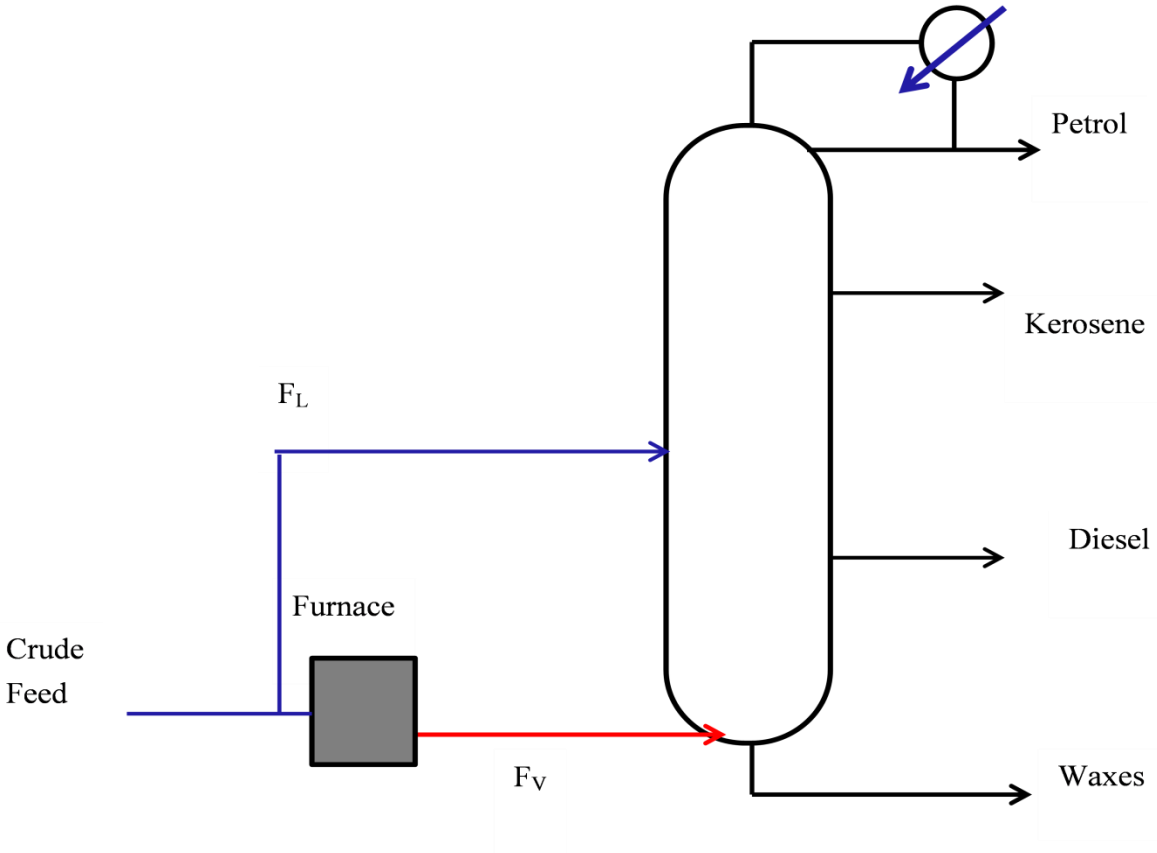

Figure 5.12: Atmospheric Crude Distillation Unit set up showing alternative distributed feed configurations. Red streams represent vapour feed streams whilst the blue streams represent liquid feed streams.

In Figure 5.12, the streams represented by blue lines are liquid feed streams, while the streams in red are vapour feed streams. The first option (which represents our base case) is when stream F_L equals zero and all the crude feed is made to pass through the furnace prior to entering the column, which would imply that F_V would be the sole feed to the column. The base case represents what is currently being done in the petroleum industry.

A deviation from standard crude oil fractionation would be to partition the feed by allowing part of the crude oil — stream, F_L, to be made to bypass the furnace and be fed to the column directly, which would result in a feed divided into a vapour and a liquid stream. Earlier in this paper, we presented two scenarios in which the feed was divided into liquid and vapour, and we investigated the effects of varying the liquid to vapour ratio. In the first and second cases we split the crude feed into 0.30/0.70 and 0.20/0.80 liquid to vapour ratios respectively. The liquid feed at 298K was fed on the 11th stage, and the saturated vapour sub-feed was charged at the bottom in both cases.

Figure 5.13 shows the simulated ACDU temperature profiles as a function of stage number for the base case (red), the 0.20/0.80 and 0.30/0.70 liquid/vapour split cases (blue and green) respectively. Since the various hydrocarbon fractions are drawn from the tower according to their specific boiling temperatures a temperature profile plot will give some insight as to what products are possible. Even though the temperature profiles are similar, the effect of the liquid sub-feed is slightly noticeable in Figure 5.13. The temperature profiles for the distributed feed cases lie below the base case temperature profile because of the cold

refluxing effect brought about by the introduction of the liquid sub-feed on the 11th stage. Since the temperature profiles are similar we can expect similar product cuts for the base case and the distributed feed cases. Consequently it comes as no surprise that the simulated results showed similar product flow-rates as well as compositions.

There was a vast reduction in reflux ratio from 11.1 to 4.40 and 6.50 respectively for the distributed feed cases (as can be seen in Figure 5.14 and Table 3). In Figure 5.15 the profile pair represented by red corresponds to vapour (dashed) and liquid (solid) flow-rates respectively for the base case whilst the blue and green profile pairs correspond to the vapour-liquid flow-rates for the 0.20/0.80 and 0.30/0.70 liquid/vapour split cases. Such a plot (Figure 5.15) is relevant as it can be instrumental in tower sizing calculations.

For the same total feed and similar product flow-rates, reduced vapour-liquid flow-rates were observed for the distributed cases as demonstrated in Figure 5.15. Looking at the section on the left side of the dashed vertical line starting on the 11th stage where the liquid sub-feed is introduced (Figure 5.15), there is a continuous rise in the vapour-liquid flow-rates as one moves up the column for the base case whilst the gradient for the vapour-liquid flow-rates for the distributed feed cases first drops abruptly then becomes flatter implying an approach to uniform vapour-liquid traffic. The liquid flows mimic and lag behind the vapour flows by a stage, the changes do not happen simultaneously, but a change in vapour flows is followed immediately by a corresponding change in liquid flows on the next stage.

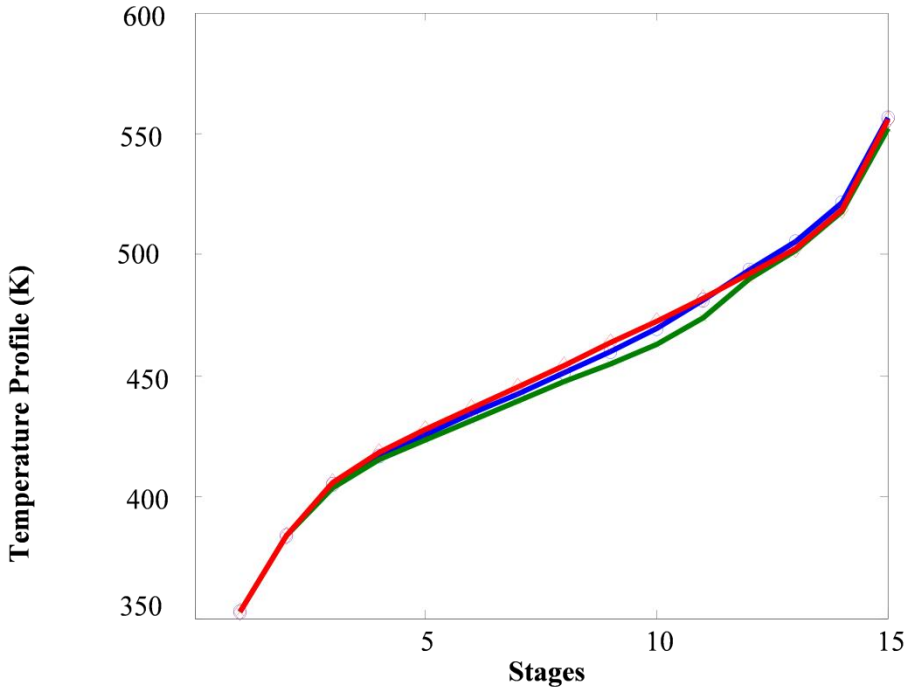

Figure 5.13: Temperature profiles for the single vapour feed case **(**red), the 0.2/0.8 liquid/vapour split case (blue) and 0.3/0.7 case (green) for the simulated ACDU as a function of stage number.

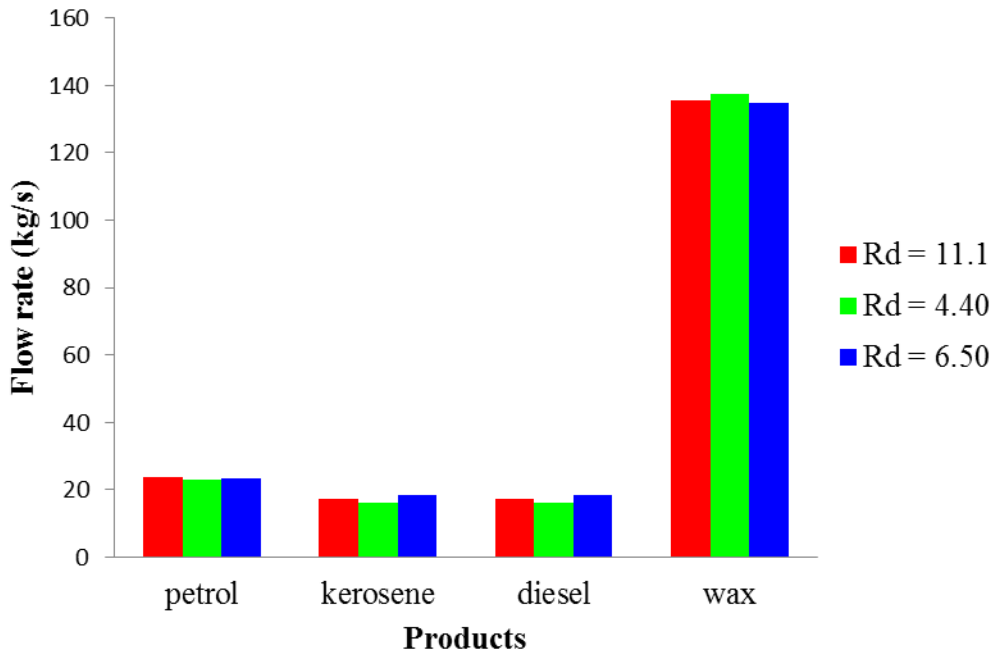

Figure 5.14: Comparison of product flow-rates obtained for the single vapour feed case **(**red), the 0.20/0.80 liquid/vapour split case (blue) and 0.30/0.70 case (green) for the simulated ACDU and the resulting reflux ratios.

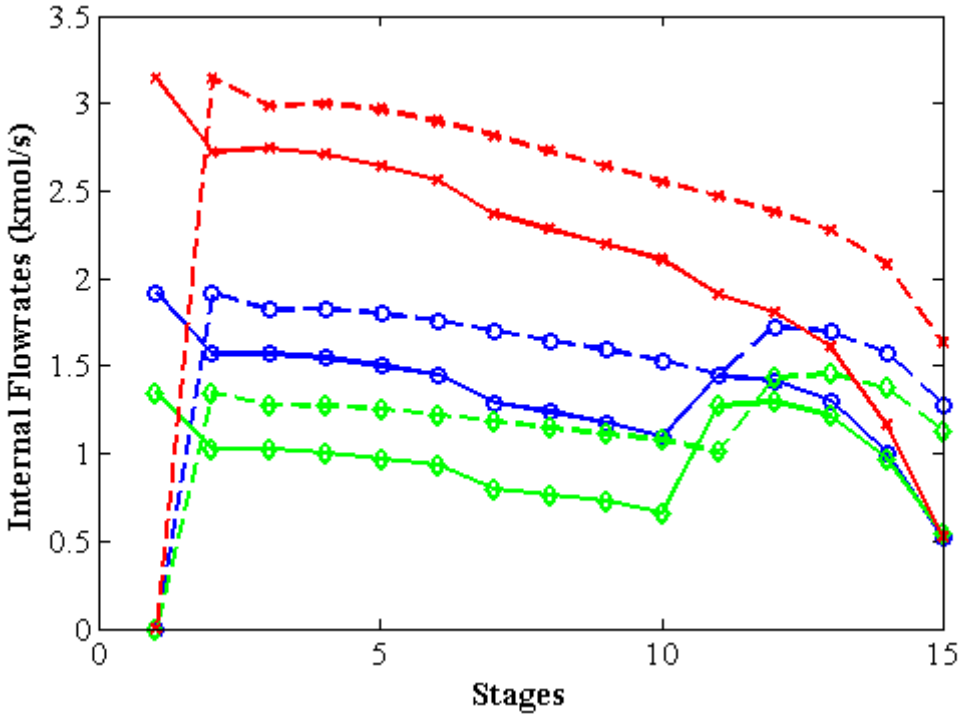

Figure 5.15: Vapour-liquid traffic, dashed and solid lines represent vapour and liquid flow-rates respectively. Base case single vapour feed (red), 0.20/0.80 liquid/vapour split case (blue) and 0.30/0.70 case (green).

We also obtained confirmation of the remarkable reduction in furnace duty we expected from 221MW for the base case to 155MW and 177MW for the two cases investigated. The latter represent a 30% and 20% drop in the energy consumed by the furnace.

Arguably, the most significant gain achieved by the two variation cases was the massive drop in condenser duty, from 113MW to 48.0MW and 60.0MW respectively, which translates into a 58% and 39% reduction respectively. This saving can be attributed to the reduction in vapour flow to the condenser caused by the refluxing effect of the liquid feed. This introduces a domino effect: the size of the furnace and of the overhead condenser can be substantially decreased, which in turn means that capital costs of pieces of equipment would be substantially reduced.

Another advantage of the proposed method is that the liquid feed can serve as a measure of temperature control for the internal reflux by providing a cold reflux. This results in reduced internal vapour flow-rates in the top section of the column as observed in Figure 13, subsequently leading to the design of columns with smaller diameters. This alteration in the ACDU design could eliminate the need for one or two pumparounds and offer yet another means of decreasing capital expenditure.

It must again be stressed that the column has not been optmised and there is potentially even greater room for reduction in energy loads to what has already been found. Furthermore issues such as controllability and or start up were not

looked at. None the less, it has been shown that there is good reason to consider distributed feed columns as a way of reducing energy consumption in non-sharp split separations.

Table 5.3: Energy consumption for single vapour feed configuration compared to combined liquid and vapour distributed feed configuration with reference to Figure 5.12.

Case	L/V Split ratio	Liquid Feed Temperature (K)	Reflux Ratio	Furnace Duty (MW)	Condenser Duty (MW)	Furnace Duty Deviation (%)	Condenser Duty Deviation (%)
Base	0/1	-	11.1	221	-113	-	-
1	0.30/0.70	298	4.40	155	-48.0	30	58
2	0.20/0.80	298	6.50	177	-69.0	20	39

6 Conclusions

Much research has focused on optimizing sharp split separations. In the case of sharp split and binary separations, distributed feed does not offer any advantages.

However in multicomponent non-sharp splits, the concept of distributed feed can offer various advantages and this was the subject of this dissertation. The CPM method was applied to a 3 component ideal system. The results showed how distributed feed could increase the distillate production rate, make infeasible separations feasible at the same reflux and that by manipulating the quality of the sub feeds, the energy consumption of the column could be reduced quite significantly (of the order of 30 to 40 %) .

The refining of crude oil is a large energy consumer and the ACDU is the column where the main separation occurs. It was shown that there are very large economic gains to be achieved in the ACDU by applying distributed feed. This method makes it practically possible to reduce the column reflux ratio and energy consumption in both in the furnace and condenser. Major savings in capital costs can also be achieved by using smaller furnaces and condenser sizes as well as decreased diameter columns.

It was established that there was good agreement between the results shown by the Matlab CPMs approach and the Aspen Plus simulations for the three-component system. Although the results could not be represented pictorially using

CPMs, it was found that when the theory was extended to a crude oil system the results appeared to follow the same trend as the three-component system. It was shown that distributing the feed could reduce the energy consumption in the furnace in our simulated case by between 20 to 30 % and the condenser load by between 40 to 60 %.

The salient feature of distributing the feed allows movement to new composition space or other operating regions that could not be achieved in the typical column configuration. In other words, it makes it possible to switch from one operating profile in a column section to a different profile in another section, as long as the profiles intersect which allows the designer much more flexibility to design columns that operate in more optimal ways.

The example looked at in this research has not been optimised as the objective was to show that there is an advantage to using distributed feeds in multicomponent non sharp split systems. It would certainly be interesting to see what the maximum saving would be in optimised systems.

References

1. Andersen, T. R., Siragusa, G., Andresen, B., Salamon, P., & Joergensen, S. B., 2000. Energy Efficient Distillation by Optimal Distribution of Heating and Cooling Requirements.
2. APV, 2000. *APV Distillation Handbook*. 4th ed. New York: APV Americas Engineered Systems.
3. Bandyopadhyay, S., Mishra, M. & Shenoy, U.V., 2004. Energy-Based Targets for Multiple-Feed Distillation Columns. *AIChE*, 50(8), pp.1837-53.
4. Barnes, F.J., Hanson, D.N. & King, C.J., 1972. Calculation of Minimum Reflux for Distillation Columns with Multiple Feeds. *Ind Eng Chem Process Des. Develop* , 11(1), pp.136-40.
5. Beneke, D., Hildebrandt, D. & Glasser, D., 2012. Feed Distribution in Distillation: Assessing Benefits and Limits with Column Profile Maps and Rigorous Process Simulation. *AIChE*, 59(5), pp.1668-83.
6. Beneke, D., Peters, M., Glasser, D. & Hildebrandt, D., 2012. *Design of Simple Columns Using Profile Maps*. New Jersey: John Wiley & Sons, Inc.
7. Beneke, D., Peters, M., Hildebrandt, D. & Glasser, D., 2013. *Understand Distillation Using Column Profile Maps*. New York: John Wiley & Sons.

8. Cho, Y.S. & Joseph, B., 1984. Reduced Order Models for Separation Columns. *Computers and Chemical Engineering*, 8(2), pp.81-90.
9. Doherty, M.F. & Malone, M.F., 2001. *Conceptual Design of Distillation Systems*. New York: McGraw-Hill.
10. Glanz, S. & Stichlmair, J., 1997. Minimum Energy Demand of Distillation Columns with Multiple Feeds. *Chem Eng Technol*, 20, pp.93-100.
11. Holland, C.D., 1963. *Multicomponent Distillation*. New Jersey: Prentice Hall Inc.
12. Holland, S.T., 2005. *Column Profile Maps: A Tool for the Design and Analysis of Complex Distillation Systems*. Thesis. Johannesburg: COMPS University of the Witwatersrand.
13. Holland, S.T., Abbas, R., Hildebrandt, D. & Glasser, D., 2010. Complex Column Design by Application of Column Profile Map Techniques: Sharp Split Petyluk Column Design. *Ind Eng Chem*, (49), pp.327-49.
14. Holland, S.T., Tapp, M., Hildebrandt, D. & Glasser, D., 2004. Column Profile Maps 2. Singular Points and Phase Diagram Behaviour in Ideal and Nonideal Systems. *Ind Eng Chem*, 43(14), pp.3590-603.
15. Jones, D.S. & Pujad, P.R., eds., 2006. *Handbook of Petroleum Processing*. Netherlands: Springer.
16. Lee, H.S., Ian, B. & Ha, J.J., 2009. *Optimising crude Unit Design*. PTQ.
17. McCabe, W.L., Smith, J.C. & Harriot, P., 1993. *Unit Operations of Chemical Engineering*. 5th ed. Singapore: McGRAW HILL.

18. Ozokwelu, D., 2011. *New design Methods Algorithims for Multi-Component Distillation Systems*. 2006: Industrila Technologies Program Purdue University.
19. Ozokwelu, D., 2011. *New design Methods Algorithims for Multi-Component Distillation Systems*. 2006: Industrial Technologies Program Purdue University.
20. Parkash, S., 2003. *Refining Process Handbook*. New York: Gulf Publishing.
21. Petyluk, F.B., 2004. *Cambridge Series in Chemical engineering Distillation Theory and its Application to Optimal Design of Separation Units*. Cambridge: Cambridge University Press.
22. Reyes-Labarta, J.A. et al., 2011. Approximate Calculation of Distillation Boundaries for Ternary Azeotropic Systems. *Industrial & Engineering Chemistry Research*, 50, p.7462–7466.
23. Ricci, P. & Montanari, R., 2008. Atmospheric Distillation of Crude Oil. In *Encyclopedia of Hydrocarbons, Refining & Petrochemicals*. 2nd ed. Milano: San Donato Milanese. pp.89-103.
24. Soave, G.S., Gamba, S., Pellegrini, L.A. & Bonomi, S., 2006. Feed-Splitting Technique in Cryogenic Distillation. *Ind Eng Chem Res*, 45, pp.5761-65.
25. Tapp, M., Holland, T.S., Hildebrandt, D. & Glasser, D., 2004. Column profile Maps 1. Derivation and Interpretation. *Ind Chem res*, 43(2), pp.364-74.

26. Towler , G. & Sinnott, R., 2008. *Chemical Engineering Design Principles, practice and economics of plant and process design*. New York: Butterworth Heinmann.
27. Viswanathan, J. & Grossmann, I.E., 1993. Optimal Feed Locations and Number of Trays for Distillation Columns with Multiple Feeds. *Ind Eng Chem Res*, 32(11), pp.2942-49.
28. Watkins, R.N., 1973. *Petroleum refinery*. 1st ed. Houston Texas: Gulf Publishing Company.