

https://dspace.org/

Identification of characteristic energy scales in nuclear isoscalar giant quadrupole resonances: Fourier transforms and wavelet analysis

Usman, Iyabo Tinuola

2008-08-08T08:37:33Z
http://hdl.handle.net/10539/5302

Downloaded from a DSpace repository. https://dspace.org/

5.6 Discrete Wavelet Analysis

The discrete wavelet transform (DWT) can be understood as the application of low-pass (large scales δE) and a high-pass (small scales δE) filters on the spectrum separating it into a so-called approximation (A) and the details (D), respectively, as shown in Fig. 5.14. Starting at the smallest possible scale ($j = 1$) one can reconstruct the original spectrum exactly as $\sigma(E) = \mathrm{A1} + \mathrm{D1}$. In the second step, A1 can be further decomposed into A2 + D2, and so forth. Figure 5.15 presents an application of the method to the spectrum of ^{208}Pb(p,p$'$) reaction measured at $\Theta_p = 8.0°$. In the topmost frames the spectrum is shown, underneath are the approximations A_i (l.h.s.) and details D_i (r.h.s.) at different decomposition levels i. Each level corresponds to a certain range of scales, given at the r.h.s. At each step the scale range increases by a factor of two. One finds that the details D_i corresponding to certain ranges of scales (e.g. D_3, D_4, D_5, D_7, D_8) are more important, whereas other details D_1, D_2 and D_6 are less significant. One advantage of the present method over the entropy index method is the possibility to distinguish whether scales are globally seen over the whole spectrum or rather localized at certain energy regions.

While the possibility for a precise determination of characteristic scales with the DWT is strongly limited, a big advantage of the method is that the decomposition is reversible. This allows to test directly the importance of different scale regions

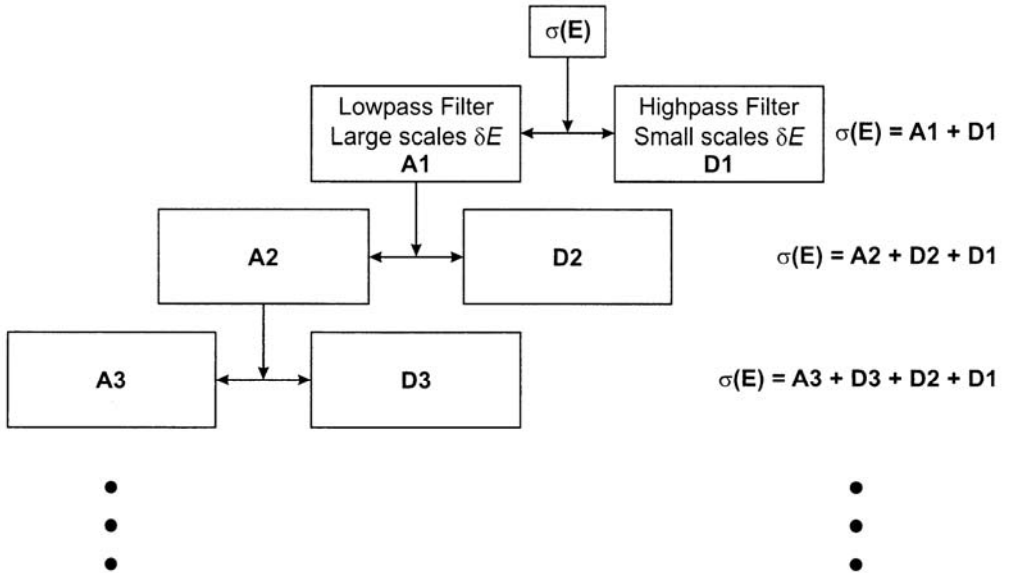

Fig. 5.14: Schematic representation of the discrete wavelet transform as a decomposition of a signal into different frequency components using a set of band-pass filters.

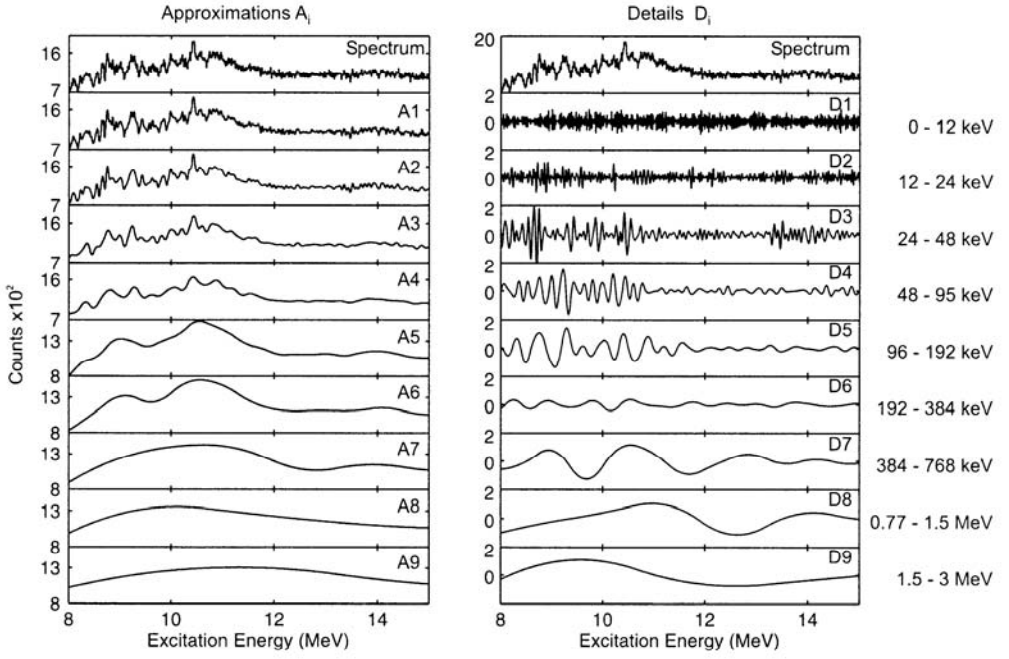

Fig. 5.15: Decomposition of a spectrum of the ^{208}Pb(p,p′) reaction measured at $E_p = 200$ MeV and $\Theta_p = 8.0°$ with the discrete wavelet transform into approximations A_i and details D_i.

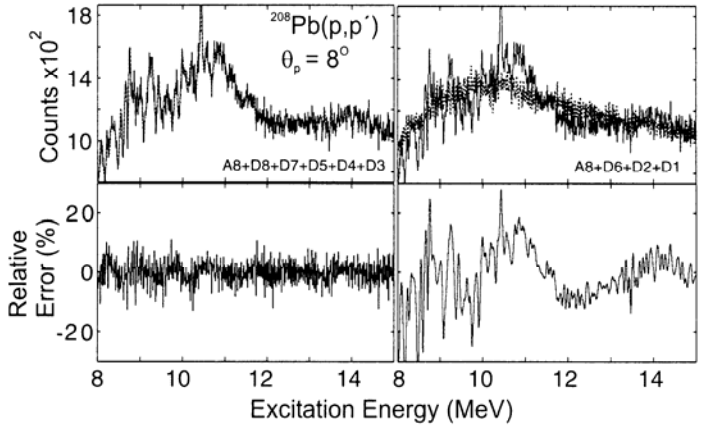

Fig. 5.16: The original spectrum (solid line) and its reconstruction (dashed line) from the decomposition in a discrete wavelet analysis analog to Fig. 5.14, including either the scale ranges predicted to be important (l.h.s.) or unimportant (r.h.s). Bottom plots show relative errors of the reconstruction, which is in one case much smaller that in another one.

for the reproduction of the observed fine structure patterns. The l.h.s. of Fig. 5.16 shows a comparison of the original spectrum (solid line) with the one reconstructed from the sum A_8+D_8+D_7+D_5+D_4+D_3 (dashed line). The fluctuations can be reproduced remarkably well. The lower part of Fig. 5.16 shows the relative errors of such a reconstruction, which is generally less that 10%. If one, on the other hand, takes the sum of A_8 with the scales predicted to be less important (r.h.s. of Fig. 5.16), only a rather poor reconstruction of the original spectrum is achieved. The results of decomposition within DWT analysis for the case of GQR in ^{90}Zr are shown in Fig. 5.17. A good reconstruction can be achieved by taking A_8 and D_8, D_7, D_4, D_3, and D_2 as is presented in Fig. 5.18. These results confirm the scale values from the CWT analysis.

Thus, the discrete wavelet analysis is indeed capable to separate out the scale regions which carry the information about the fine structure and to test their importance directly. The experience shows that this method works quite well in cases, where one has only few well-separated scales, so that most of the decomposition levels can be excluded. In the case of the GQR, this seems to be somewhat problematic, as one really has several closely-lying scales, so that almost each level of decomposition contains one or two scales, and should be taken for a proper

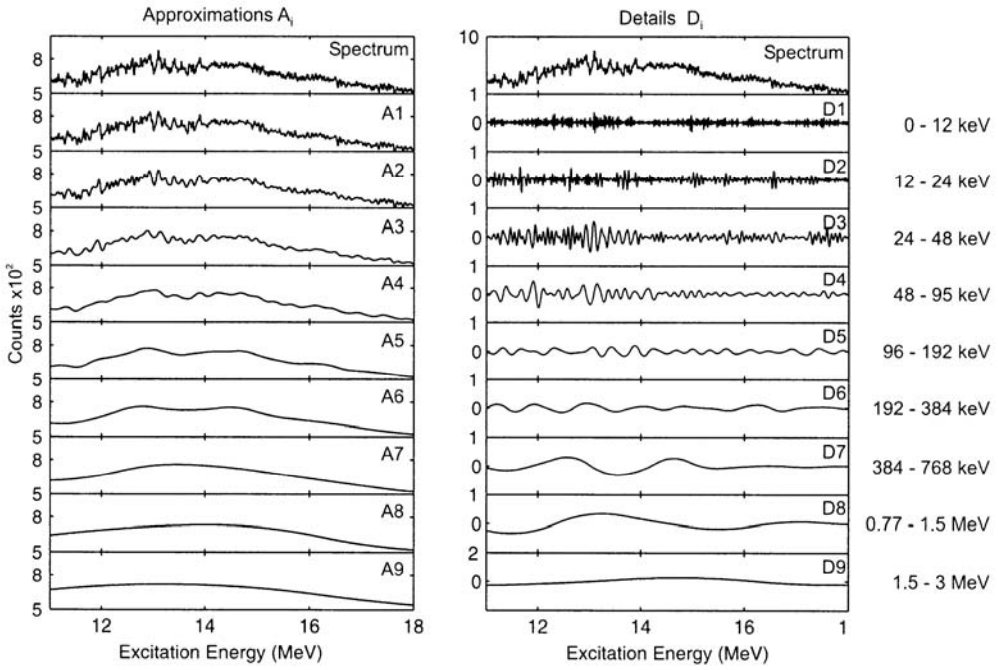

Fig. 5.17: Same as in Fig. 5.15 for the case of ^{90}Zr at at $E_p = 200$ MeV and $\Theta_p = 9.2°$.

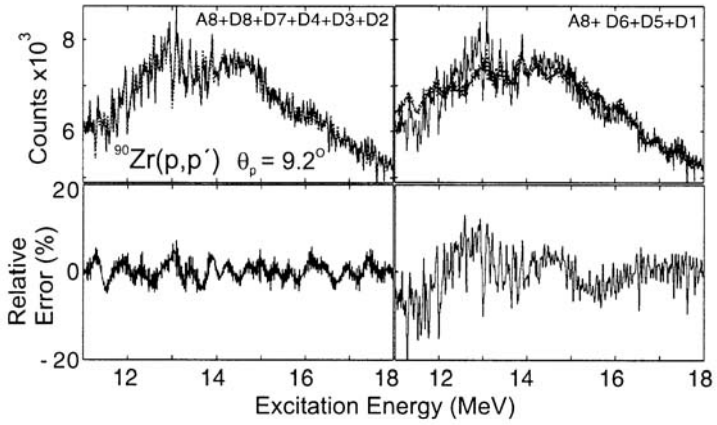

Fig. 5.18: Same as in Fig. 5.16 but for ^{90}Zr(p,p') reaction at $E_p = 200$ MeV and $\Theta_p = 9.2°$.

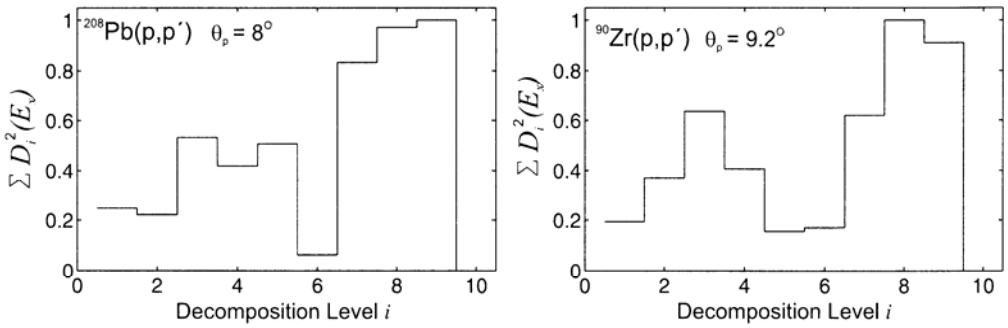

Fig. 5.19: Sum of squared details of the DWT of ^{208}Pb (l.h.s.) and ^{90}Zr (r.h.s.), as a function of the decomposition level.

reconstruction of the fine structure. Moreover, if a scale value lies close to the boundary between two scale ranges, its power will be distributed over both ranges, which might further complicate the interpretation of obtained results. Still, a cross-consistency check using DWT is of great help.

Another possibility to quantitatively estimate the importance of each decomposition level lies in the squared wavelet coefficients from the details of DWT, as shown in Fig. 5.19. Plotted there is the sum of squared details, normalized to unity, as a function of the decomposition level. At certain levels there are clear maxima and minima, reflecting the significance of the corresponding scale range. Thus, in case of ^{208}Pb (l.h.s.), at level 6 a strong minimum is observed, which tells that no characteristic scales are present in the region 192-384 keV, which is consistent with the results of the CWT analysis, carried above. The similar picture for ^{90}Zr, shown in r.h.s. of Fig. 5.19, reveals, that levels 1, 5 and 6 are not significant for fine structure characterization, as it was just found from the reconstruction procedure. Two scales in Tab. 5.1 lie in this range. However, observing Fig. 5.13, their magnitude is weak, so that their significance is questionable. This represents a good example for a check of relevance of scales, using the discrete wavelet transform. Also, other suitable statistical measures, e.g. the entropy index or some other partitioning function can be constructed out of details of the DWT and investigated, similarly to Fig. 5.19.