

https://dspace.org/

Human thermoregulation in the heat: predictive models of physiological conductance and sweat rate

Cohen, Marc Harry

2015-02-09
http://hdl.handle.net/10539/16954

Downloaded from a DSpace repository. https://dspace.org/

CHAPTER 2

A CRITICAL REVIEW OF THE LITERATURE

2.1 An Introduction to the Concept of a Thermoregulatory Model

The analytical modelling of man's thermoregulatory response as a result of long exposures (four to eight hours) to hot environmental conditions is based on two important requirements,

(i) the description of heat transfer within the body,

(ii) the description of heat transfer between the body surface and the environment.

Heat can be stored in various parts of the body. Any model which describes the body (passive system) in terms of lumped elements, layers and segments, specifies regions where the heat may be stored. A consequence of the storage of heat in an element is the rise in temperature of that element.

In order to prevent body temperatures from rising to dangerous levels, heat must be transported away from sites of generation to cooler sites at the periphery. Once at the surface, the heat can be lost to the environment via radiation, convection and evaporation. Radiative and convective heat loss rely on a positive temperature gradient between the skin and the surrounding surface temperature and the skin and the ambient air dry-bulb temperature respectively. In severe conditions where radiation and convection result in heat gains, heat can still be lost through evaporation. If the production of sweat is sufficient to wet regions of the skin, the vapour pressure at the wet sites can exceed the ambient vapour pressure.

Heat is lost by evaporation of sweat as a result of the positive vapour pressure gradient.

Coefficients of heat transfer must be known in order to calculate the quantity of heat lost or gained through each mode of heat transfer. The determination of heat transfer must be consistent with the model of the passive system, the heat transfer coefficients at the periphery of each segment of the model of the body must be mathematically stated.

The heat balance equation, based on the First Law of Thermodynamics, can be written for each model segment,

$$M - W_o - E_{res} - R - C - E = S_t \qquad (2.1)$$

If the rate of heat generation is greater than the rate of heat loss, storage will be positive and body temperatures will rise. When storage is zero, the body is in a state of thermal equilibrium and all temperatures remain constant.

Models which assume zero storage are steady state models and are not expressed in terms of equations which are time dependent. Models which include the calculation of body heat storage are inherently time dependent since they are expressed in terms of time derivatives of temperature. The inclusion of storage alone does not signify a true dynamic model. A dynamic model of human thermoregulation should also include the dynamics associated with

(i) the transportation of heat within the body,

(ii) the secretion of sweat onto the skin,

(iii) long and short term state of acclimatization and hydration.

Heat is lost by evaporation of sweat as a result of the positive vapour pressure gradient.

Coefficients of heat transfer must be known in order to calculate the quantity of heat lost or gained through each mode of heat transfer. The determination of heat transfer must be consistent with the model of the passive system, the heat transfer coefficients at the periphery of each segment of the model of the body must be mathematically stated.

The heat balance equation, based on the First Law of Thermodynamics, can be written for each model segment,

$$M - W_o - E_{res} - R - C - E = S_t \qquad (2.1)$$

If the rate of heat generation is greater than the rate of heat loss, storage will be positive and body temperatures will rise. When storage is zero, the body is in a state of thermal equilibrium and all temperatures remain constant.

Models which assume zero storage are steady state models and are not expressed in terms of equations which are time dependent. Models which include the calculation of body heat storage are inherently time dependent since they are expressed in terms of time derivatives of temperature. The inclusion of storage alone does not signify a true dynamic model. A dynamic model of human thermoregulation should also include the dynamics associated with

(i) the transportation of heat within the body,

(ii) the secretion of sweat onto the skin,

(iii) long and short term state of acclimatization and hydration,

(iv) the characteristics of the controller.

The dynamic human thermoregulatory system can be compared with the classical engineering temperature control system shown in Figure 2.1. The method used to stabilize temperature of the plant at a particular level is the comparison of the measured temperature with a reference signal set at the desired temperature. The temperature of the plant is sensed by transducers and fed back to a comparator. The magnitude and sign of the error between the setpoint and feedback signals invokes some corrective action. Each block in the diagram can have a dynamic transfer function. Human temperature control is thought to operate in an analagous fashion.

Werner (1980) reviewed various concepts of human thermoregulation. He reduced the thermoregulatory system into four blocks, the controller, actuators, passive system and feedback elements (see Figure 2.2(a)). He stated that the common and necessary element of all control concepts is the requirement that steady states are reached on the basis of a balance of two or more variables. Mathematically speaking a minus sign or sign of inversion is required within the control loop. Four different schemes have been proposed for the way in which the minus sign or negative feedback process can be introduced, namely

(i) balance of rise and fall feedback elements (Mitchell et al 1970 and Bligh 1977),

(ii) balance of heat production and heat loss, (no temperature control) (Houdas et al. 1977),

(iii) balance of passive and active processes in the closed control loop (Werner 1977).

These three concepts are shown in Figures 2.2(b), (c) and (d) respectively.

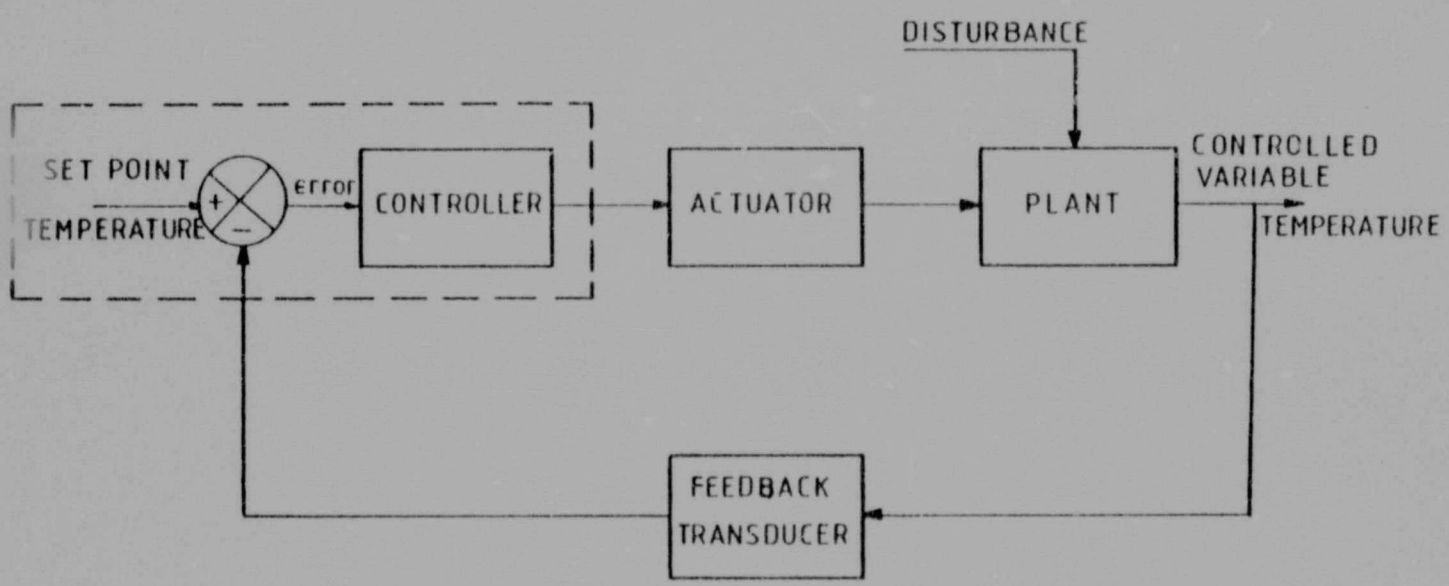

Figure 2.1 BLOCK DIAGRAM OF A CONVENTIONAL NEGATIVE FEEDBACK TEMPERATURE CONTROL SYSTEM

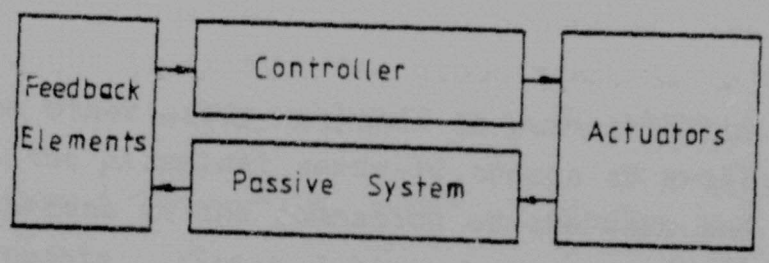

(a)

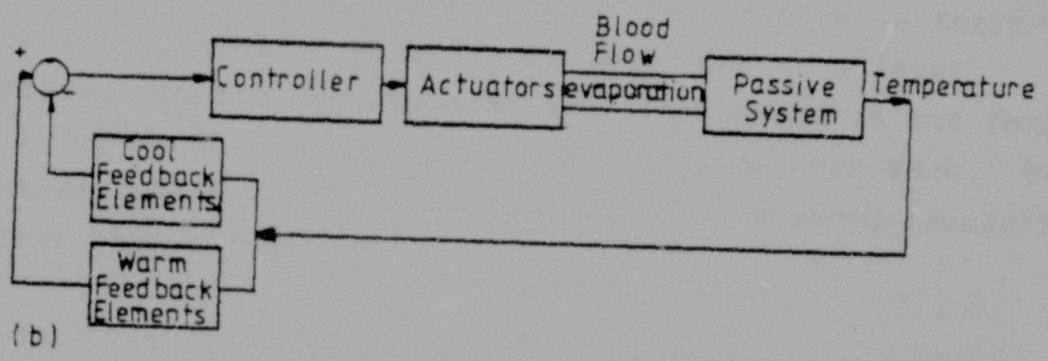

(b)

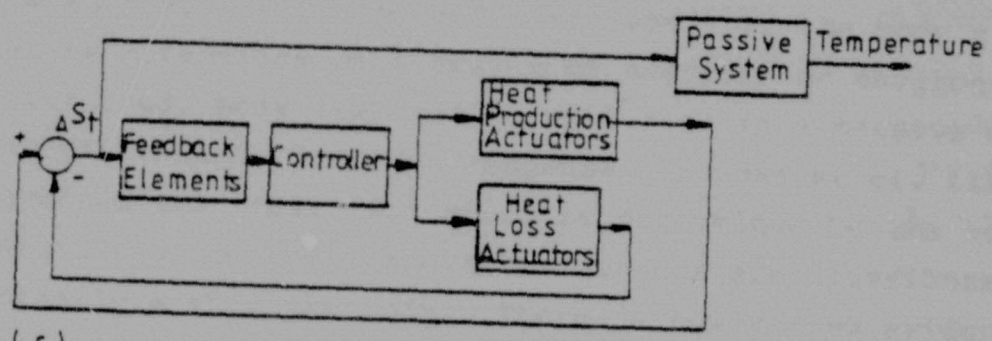

(c)

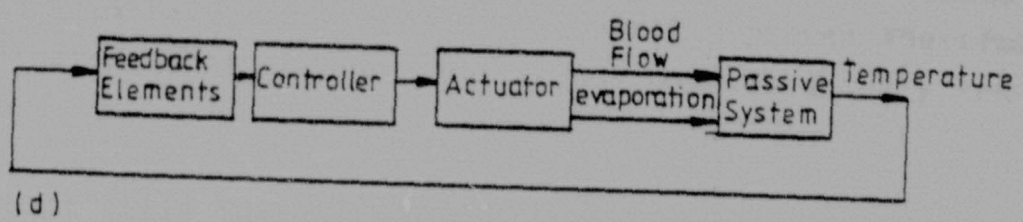

(d)

Figure 2.2 (a) SIMPLE SCHEME OF THERMOREGULATION,
(b) CONTROL WITH POSITIVE AND NEGATIVE FEEDBACK
(c) HEAT FLOW REGULATION,
(d) CONTROL WITHOUT REFERENCE OR EXPLICIT SIGNAL SUBTRACTION,

(from Werner 1980)

Concept (i) (Mitchell et al. 1970 and Bligh 1977) can be explained as follows. Two groups of feedback elements are thought to exist. One group responds to cold stimulus and the other group responds to warm stimulus. No set point in the classical sense is though to exist, rather it is inherent in the summation of the warm and cool feedback elements. Figure 2.2(b) shows the dynamic balance feedback system as it applies to human thermoregulation. If cool sensor feedback signals dominate, heat production mechanisms are invoked. If warm sensor signals dominate, heat loss mechanisms are excited. Temperature is therefore not controlled at a single level but at a level dependent on the magnitude of the disturbance in the form of a change in environmental conditions or work rate. The control system is therefore analagous to a servo-mechanism rather than a regulator.

Concept (ii) (Houdas et al. 1977) maintains a balance between heat production and heat loss. If the body gains heat by metabolism as a result of exercise or environmental load, body temperature will rise in a passive way consistent with open loop response. Houdas et al. (1977) suggested that heat flux could be determined by the controller because the temperature sensors are distributed spatially within the body. There is however no evidence to support the postulate that heat flux is the controlled variable. The existence of receptors which can measure heat flux have never been experimentally proven therefore indicating that concept (ii) is not physiologically tenable.

Concept (iii) (Werner 1977 and 1980) suggests a distributed parameter control strategy as follows. The regulated variable is not a locally defined single temperature, it is probably not heat flux nor mean body temperature but rather an adaptable integrative temperature signal. The conceptual model takes into account locally distributed measurement, processing and actuation. Negative feedback

is simply achieved by an odd number of negative input/output relations in the subsystems in the closed loop. The distributed parameter model is still very much a theoretical device requiring quantitative description of the coupling matrices between local measurement, its central processing and local actuator output.

In classical engineering control systems, there are techniques which can be used to identify components of a system. The control loop is opened and by measuring the output of a block as a result of a specific input sequence (impulse, step or ramp), the transfer function of that block may be determined. It is difficult to apply the same technique to the human temperature control system because the control loops cannot be severed. It is therefore common practice among physiologists to group feedback elements, controller and actuators into a single block called the controlling system (see Figure 2.3). Physiological response to a disturbance is monitored and empirical equations are derived to relate the response to a state or combination of states of the plant. The dynamics inherent in the feedback transducers, controller and actuators are therefore inseparable. Most thermoregulatory models are structured in the manner described above.

A considerable quantity of work has been devoted to representing the passive system (plant) in different ways. Cylinders, slabs, multilayered cylinders and slabs and segmented cylinders have been used to describe the human body in terms of a lumped parameter model. The controlling system has not received as much attention to detail and relies on empirical expressions derived from experimental observations.

Statistical models (Rinquest 1981) and purely empirical models (Givoni and Goldman 1972) cannot be considered as rational approaches to predicting the rectal temperature responses of men exposed to the variety of environments

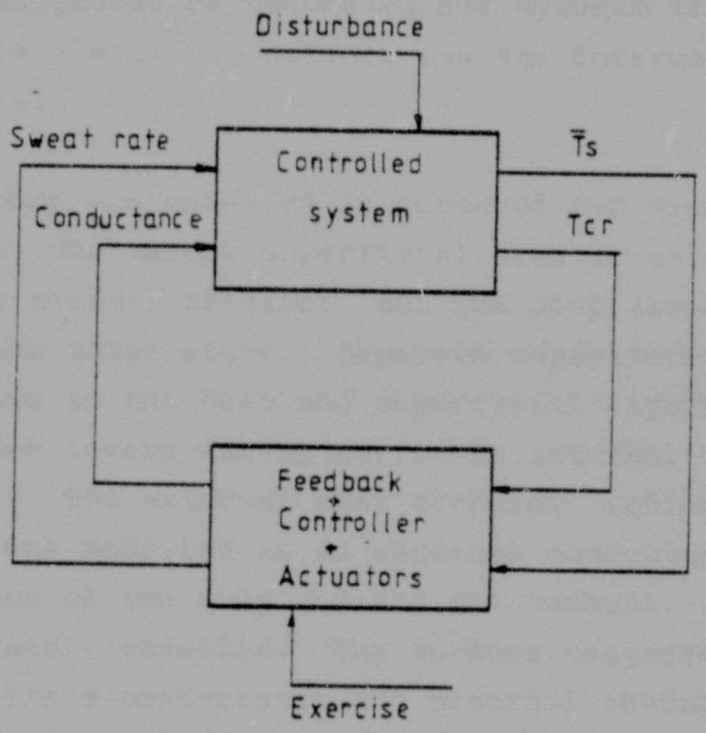

Figure 2.3 REDUCED BLOCK DIAGRAM OF THE THERMOREGULATORY SYSTEM SHOWING CONTROLLED AND CONTROLLING SYSTEMS

and work tasks found underground. Only models based on the structure described above have been reviewed in the section to follow.

2.2 Review of Composite Thermoregulatory Models

The first true thermoregulatory model of the human body was suggested by MacDonald and Wyndham (1950). Their simple electrical network was the forerunner of many other models.

The body was modelled in terms of two distinct thermal zones, the narrow superficial area in which there was a steep thermal gradient, and the deep tissue with a more uniform temperature. Separate capacitors represented heat storage in the deep and superficial layers. Heat transfer between layers was by way of an internal tissue conductance. The external heat transfer, radiation plus convection was modelled as an external conductance between the surface of the body and the environment. Evaporation was separately modelled. The authors suggested that the internal tissue conductance and external conductance representing evaporation were actively controlled by internal and superficial body temperature. They inferred from experimental observation that internal tissue conductance and evaporation rate, as a result of sweat production, were highly non-linear functions of skin and rectal temperatures. They concluded that the observed responses were consistent with negative feedback servo-mechanisms demonstrating stable control characteristics.

They did not propose equations for the active control mechanisms but merely used their model to qualitatively explain their experimental results.

The analogue computer has been used extensively to simulate thermoregulatory models (Atkins 1962, 1963, Atkins and Wyndham 1969, Crosbie et al. 1961 and Brown 1963).

Atkins (1975) has produced one of the most comprehensive analogue computer models to date. The model was initially simulated on the analogue computer but was programmed onto a digital computer when simulation packages became available. He modelled the passive system in terms of a cylinder having four concentric layers: core, muscle, tissue and skin. Heat transfer between the first three layers (core, muscle and tissue) was dependent on convection as a result of blood flow. Heat was also transferred from regions of generation to the unperfused skin layer by way of tissue conduction. The combined heat transfer as a result of vascular convection and tissue conduction is termed physiological conductance and is discussed in detail in Section 2.4. The active control of blood distribution and flow rate was determined by the metabolic requirements and combined inputs from tissue, muscle and core temperatures. The rate of secretion of sweat and its evaporation at the skin surface was determined by the core and skin temperature.

The sweat rate and physiological conductance characteristics were based on the work of Wyndham and Atkins (1968). Empirical equations were fitted to data from experimentation lasting only two hours. The dynamic nature of the sweat rate response witnessed in experimentation lasting four hours or more and described in Section 2.5 was therefore not included.

Although the model predicts the two hour response of men to work and rest in hot and cold conditions, it cannot be applied, in its present form, to the prediction of the rectal temperature response of men performing four hours of underground shift work.

Stolwijk and Hardy (1966) developed a model of temperature regulation in man for the purpose of theoretical analysis of experimental results and evaluation of hypothetical concepts. Stolwijk and Hardy (1971) improved their original

model so as to predict, in quantitative terms, the response of men to work and rest in different environmental conditions.

The passive system consisted of appropriately sized cylinders representing the trunk, arms, hands, legs and feet; the head was represented by a sphere. Each cylinder was further subdivided into four concentric layers, core, muscle, fat and skin. An additional central blood compartment, representing the large arteries and veins, exchanges heat with all other compartments via the convective heat transfer occurring as a result of blood flow to each compartment. For each compartment, heat balance equations were developed to describe the heat flow via conduction and convection as a result of metabolic heat produced in that compartment. Radiative, convective and evaporative heat transfer coefficients were estimated for the surface of each segment.

The control of sweat rate was expressed in terms of internal body temperature and skin temperature. The empirical equation describing sweat rate was based on short duration "steady state" experimental results. Heat transfer between the body core and the skin was calculated in terms of peripheral conductance. "Quasi-steady state" data (storage = constant) was used to describe the conductance equation as a function of internal body temperature and skin temperature. Neither the sweat rate nor the conductance equations predicted that these two responses would saturate at high levels of body temperature.

Stolwijk and Hardy's (1971) model is therefore an attempt at using short term steady state control characteristics to describe responses which are time dependent. It is not surprising therefore that Konz et al. (1977) were able to use Stolwijk and Hardy's model to predict body temperature response of resting men to mild step changes in environ-

mental conditions. Predictions were only matched with data for two hours of experimentation.

Gagge et al. (1970) developed a steady state model of human thermoregulation. The purpose of their model was to quantify the relative effects of combinations of metabolic rate, clothing insulation, dry-bulb temperature, humidity and air movement on man's response in order to construct an effective temperature scale.

The body was treated analytically as consisting of a single cylinder. The cylinder was divided into a central core, a thin shell representing the skin and an outer shell representing a layer of clothing. The core was considered to have uniform temperature, T_{cr} and the shell uniform temperature equal to the mean skin temperature, $\bar{T}_s$. Reference levels were assigned to core and shell temperatures such that minimal regulatory effort was required in maintaining body temperature either by vascular effort or by sweating.

Heat transfer between the core and the shell was described by the skin blood flow control. The steady state flow was expressed as a function of deviations in core and shell temperature from the reference levels mentioned above. The rate of sweat secretion under steady state was expressed as a function of deviation of core temperature from the reference temperature multiplied by deviation of shell temperature from the reference temperature. An additional multiplier on sweat rate was dependent on the local modification of the sweating drive by skin temperature. Their model was only used to predict steady state response of unacclimatized men to environment, work rate and clothing.

Azer (1979) and Azer and Hsu (1977) adopted Gagge et als' (1970) single cylinder core and shell representation of the passive system. Azer (1979) formulated the model to

predict man's changing response as a result of acclimatization to hot humid conditions.

The core of the cylinder consisted of 90 per cent of the total body mass per unit body surface area in hot environments. The remaining 10 per cent was assigned to the shell. The core was assumed to be at uniform temperature, T_{cr} and the shell at a uniform temperature equal to the mean skin temperature, $\bar{T}_s$. Heat produced in the core by metabolism was transferred to the skin by vascular convection and tissue conduction. The total internal heat transfer was characterized by the lumped parameter, physiological conductance, K. Once at the skin surface the heat was lost by way of radiation, convection and evaporation of sweat. A heat balance was written for each layer of the cylinder, for the core

$$m_{cr}C_{cr}\frac{dT_{cr}}{dt} = (M-W_o) - E_{res} - K(T_{cr}-\bar{T}_s) \qquad (2.2)$$

and for the shell

$$m_sC_s\frac{d\bar{T}_s}{dt} = K(T_{cr}-\bar{T}_s) - (R+C+E) \qquad (2.3)$$

Heat could therefore be stored in two places, the core and the shell. Heat generated in the core as a result of metabolism was lost directly from the core by way of external work and respiration. The remaining heat was either stored in the core or transferred via physiological conductance to the shell. The heat could be stored in the shell and/or lost to the environment.

Physiological conductance was determined by a non-linear controlling function of core and skin temperatures. A saturation level of conductance was specified although the

controlling equation was capable of predicting a higher value. Sweat rate was also expressed as a non-linear function of core and skin temperatures (Nadel et al. 1971a).

The model was able to predict changes in rectal temperature response which took place during the course of acclimatization. When trying to predict the rectal temperature response to four hours of work in the heat, the model generally overpredicted rectal temperature by as much as one degree centigrade.

One can conclude that the model described above is an attempt to predict values of dynamically changing variables by using steady state controlling characteristics. The only dynamics present are those specified by the storage terms in the differential Equations (2.2) and (2.3).

Wissler (1959, 1961) developed a steady state mathematical model describing temperature profiles within the body. Wissler (1964) then expanded his original model to enable predictions of transient temperature gradients within the body to be made. Physiological parameters such as local metabolic heat generation rates, local blood flow rates and rates of sweating were all required as input data to the model. The model was therefore a detailed representation of the passive system alone. The body was divided into fifteen geometric regions, the head, thorax, abdomen and the proximal, medial and distal segments of arms and legs. Each segment was further divided into fifteen radial sections such that the physical properties of each could be individually assigned. In each segment, the large arteries and veins were approximated by an arterial and venous pool distributed radially throughout the segment. Storage of heat could occur in the blood pools and heat was transferred to surrounding tissue via convection. Axial temperature gradients in each segment were neglected.

The model was solved using a finite element method and produced qualitatively correct results provided that approximately correct values of physiological parameters were given. The solution of such a model could be considered as being a purely academic exercise unless combined with a model of the controller.

Kuznetz (1979) used a passive system model similar to that derived by Wissler (1964). He included equations to calculate temperature variations in two spatial dimensions, radial and axial. The reason for increasing the complexity of an already elaborate system was to predict the temperature difference between sides of the same body compartment when heat was generated by either muscular contractions or by exposure to disparate environments. Kuznetz (1979) combined the model of the controlling system derived by Stolwijk and Hardy (1966, 1971) with his model of the passive system. All the criticisms levelled at the Stolwijk and Hardy model can be levelled at Kuznetz's model as a result of the specification of sweat rate control and physiological conductance control in terms of steady state equations. Kuznetz himself has pointed out a deficiency in his model. Sufficient experimental data was not available to enable accurate physical properties of each body segment as a function of radius and angle to be used as input to the model.

The use of the Kuznetz model is therefore limited to qualitative investigations of hypothetical exposures to non-uniform environments and temperature variations as a result of heat generated non-uniformly by muscles during specific exercise tasks. In its present form therefore, the model cannot be used to predict the rectal temperature response of underground mining shift workers.

Stewart (1981) has compiled a model to predict the fourth hour response of unacclimatized men exposed to heat and

required to work. His model is based on a single cylinder core and shell representation of the passive system. In order to quantify the controlling system equations, he conducted experimentation on in excess of 700 men. The environmental conditions and work rates used were not broad enough to ensure a comprehensive range in physiological response. Equations used to describe the fourth hour values of sweat rate and physiological conductance were expressed in terms of non-linear functions but could not be used to define saturation levels. Physiological conductance was described in terms of a weighted body temperature driving signal, T_{mb} as well as metabolic rate. Although only hinted at in past studies, Stewart (1981) showed that metabolic rate was a strong modulator of physiological conductance. The metabolic rate effect on physiological conductance is discussed in Section 2.4.2. Sweat rate was expressed in terms of the weighted body temperature driving signal, a multiplying factor determined by the local effect of mean skin temperature as well as an inhibiting factor as a result of skin wettedness. Good agreement was achieved between predicted and observed data. The use of the model outside the range of data on which it was based is unpredictable as a result of the incomplete description of the controlling system equations. Before a model, such as the one described above, can be applied to acclimatized men, it is necessary to quantify both the sweat rate and physiological conductance responses of acclimatized men to a wide variety of environments and work rates.

2.3 A Model for Thermoregulation in Man

In Section 2.1, two requirements of a model were stressed. Firstly, the description of heat transfer within the body and secondly, the description of the heat transfer between the body surface and the environment. By means of an eclectic process it is possible to postulate a block diagram of the thermoregulatory system which incorporates the abovementioned requirements.

In specifying the form of the passive system model, the following arguments were taken into consideration.

(i) Heat transfer equations have only been accurately established for the body as a whole and there is therefore little point in dividing the body into various segments rather than considering it as a single cylinder or slab.

(ii) In multilayered models, thermal properties and local rates of heat generation have to be assigned to each layer, quantities which are difficult to measure and therefore not well established.

(iii) Current methods of modelling heat transfer between the bloodstream and the surrounding tissue are not satisfactory. The blood flow rate through a particular tissue layer and the distribution of the blood within a layer are important factors in determining heat transfer but have not been investigated thoroughly.

The simple single cylinder core and shell model appears to overcome all of the difficulties described above and is therefore adopted as the passive system model to be used in the present study.

The model of the controlling system must be compatible with the passive system. Physiological conductance is therefore used to describe the heat transfer between the core and the shell. Sweat rate must also be included in the controlling system to enable the quantity of evaporative heat loss to be calculated.

The overall block diagram model using Laplace Transform terminology is shown in Figure 2.4.

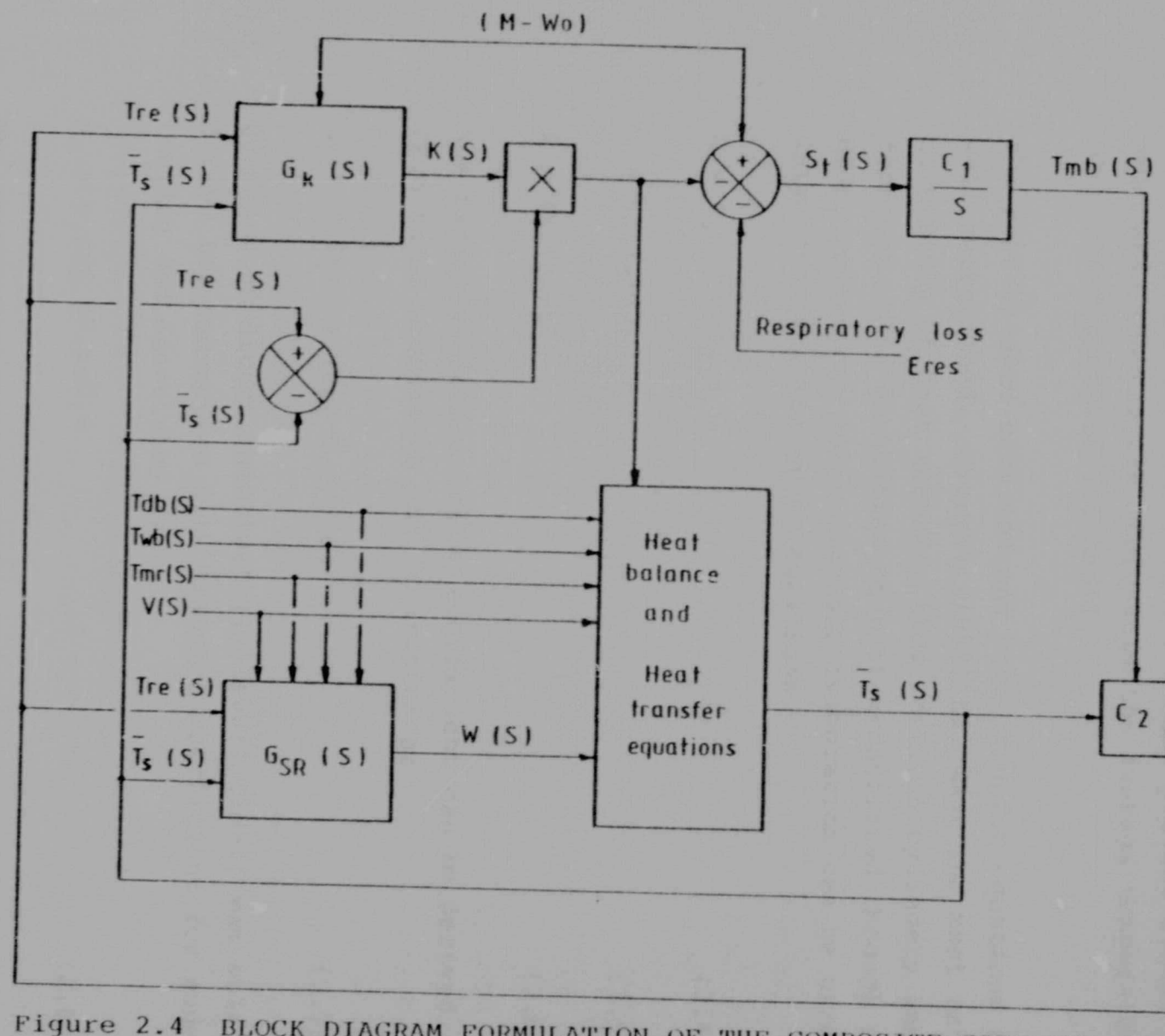

Figure 2.4 BLOCK DIAGRAM FORMULATION OF THE COMPOSITE CORE AND SHELL THERMO-REGULATORY MODEL

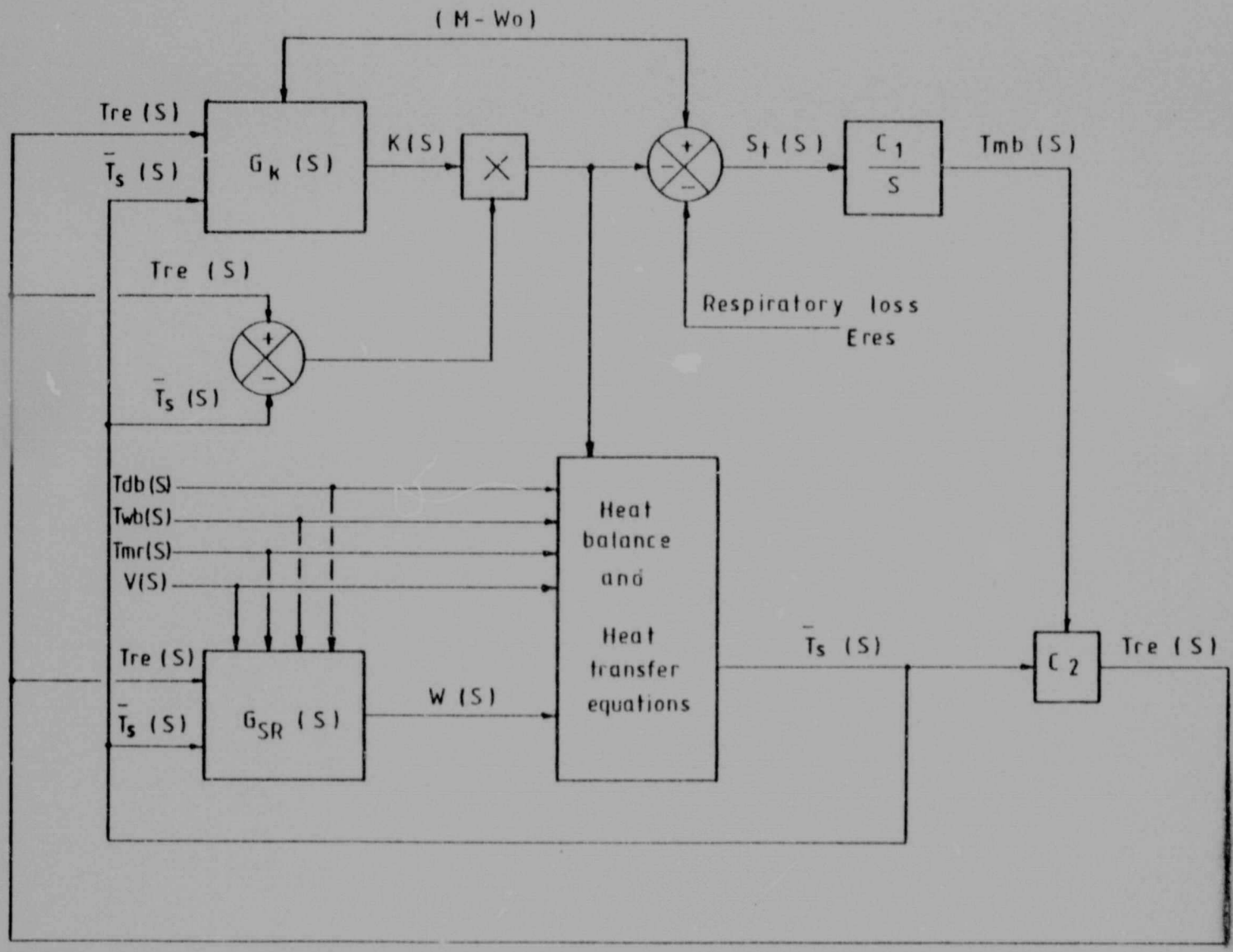

Figure 2.4 BLOCK DIAGRAM FORMULATION OF THE COMPOSITE CORE AND SHELL THERMO-REGULATORY MODEL

Rectal temperature has been used traditionally for experimental measurement of deep body temperature. Rectal temperature is usually the highest temperature in the body in resting men (Minard and Copman 1963), but during exercise muscle temperatures may be higher (Saltin and Hermansen 1966). The rectal temperature is however used as a measure of the core temperature in the present study. The mean skin temperature represents the average temperature at the periphery of the shell.

The heat balance equation and heat transfer equations are well established. Stewart (1981) has made the most extensive study of heat transfer from vertical cylinders and from man. The quantities of heat transferred through each mode, radiation, convection and evaporation can be calculated from the following equations,

$$R = f_r h_r(\bar{T}_s - T_{mr}) \qquad (2.4)$$

$$C = h_c(\bar{T}_s - T_{db}) \qquad (2.5)$$

$$E = Wh_e(p_s - p_a) \qquad (2.6)$$

The radiative heat transfer coefficient can be derived from first principles and is written as

$$h_r = 4,61(1 + (T_{mr} + \bar{T}_s)/546)^3 \qquad (2.7)$$

By means of direct calorimetry, Stewart (1981) was able to derive the convective heat transfer coefficient for nude, resting and exercising men,

$$h_c = 0,608\ p^{0,6}v^{0,6} \qquad (2.8)$$

The evaporative heat transfer coefficient may be calculated by applying the Colburn analogy (Stewart and Van Rensburg 1976) to the convective coefficient,

Author Cohen M H
Name of thesis Human Thermoregulation in the Heat: Predictive models of Physiological conductance and sweat rate 1983

PUBLISHER:
University of the Witwatersrand, Johannesburg
©2013

LEGAL NOTICES:

Copyright Notice: All materials on the University of the Witwatersrand, Johannesburg Library website are protected by South African copyright law and may not be distributed, transmitted, displayed, or otherwise published in any format, without the prior written permission of the copyright owner.

Disclaimer and Terms of Use: Provided that you maintain all copyright and other notices contained therein, you may download material (one machine readable copy and one print copy per page) for your personal and/or educational non-commercial use only.

The University of the Witwatersrand, Johannesburg, is not responsible for any errors or omissions and excludes any and all liability for any errors in or omissions from the information on the Library website.