

https://dspace.org/

# Corporate social entrepreneurship, employee engagement, organisational citizenship behaviour and job satisfaction

**Mlilo, Sifiso**

**2020**
https://hdl.handle.net/10539/30811

Downloaded from a DSpace repository. https://dspace.org/

# Corporate social entrepreneurship, employee engagement, organisational citizenship behaviour and job satisfaction

**Sifiso Mlilo**

**A thesis submitted to the Faculty of Humanities, University of the Witwatersrand, Johannesburg, in fulfilment of the requirements for the degree of Doctor of Philosophy.**

**March 2020**

# DECLARATION

I hereby declare that this thesis is my own work and has not been submitted for any other degree or to any other university for examination.

_____

Sifiso Mlilo

March 2020

# DEDICATION

In memory of Castro Ntsebeza, a dear friend I miss terribly. You were very supportive when I made the decision to embark on this journey and stated confidently “You’ll get it done Kakarot”. You were right brother.

# ACKNOWLEDGEMENTS

I would like to thank my supervisor, Prof Karen Milner, for encouraging me to undertake this challenge and the outstanding support. The combination of your razor-sharp intellect, great sense of humour and patience has made this an unforgettable experience. Thank you for everything Prof.

To my mom and sister Khanya, thank you for the great support you provided throughout the study. Your encouragement served as strong motivation on a daily basis.

Special thanks to my grandmother for your own special brand of motivation and encouragement. You always knew what to say to keep the fire burning.

Thank you to Brandon, Mike and Petra for your assistance with various aspects of the statistical analyses I undertook. I learned a great deal discussing the study and data with all of you.

Thank you to an old friend, Greg, for helping me with the data clean up and providing great encouragement throughout the project.

I would like to thank my old boss, mentor and friend Nhlamu, for encouraging me to pursue this project and giving me tremendous flexibility to do so whilst working. Your open-mindedness and support were critical in ensuring the project got off the ground.

To Bheka and Lindi, thank you for your support. Thank you, Bheka, for helping during my painfully difficult second data collection phase.

Special thanks to Andrew, Alison and Adam for your great support and the awesome pizza nights. You have been so supportive from the start and showed a genuine interest in my study. I appreciate your friendship.

To my dear friends Stephen and Sarika, thank you for taking an interest in my study and encouraging me to persist. Your friendship continues to mean a lot to me.

To my partner Mbali, thank you for your tremendous support. You have been an outstanding source of strength, a great sounding board and very capable proof-reader.

I would like to also thank all those who participated in the study. Without you, completing the work would simply not have been possible.

The financial assistance of the National Institute for the Humanities and Social Sciences (NIHSS), in collaboration with the South African Humanities Deans Association (SAHUDA) towards this research is hereby acknowledged. Opinions expressed and conclusions arrived at are those of the author and are not necessarily to be attributed to the NIHSS and SAHUDA.

# ABSTRACT

Corporate social entrepreneurship (CSE) is a relatively new concept that provides a process for effective blended value creation for corporations and their stakeholders. In a world of finite natural resources, CSE represents a progressive step-change to the approach taken to corporate social responsibility (CSR) by organisations. The current study sought to contribute to the literature on CSE by focusing on two specific aims. The first was to develop a measure of CSE using the conceptual framework of CSE developed by Austin and Reficco (2009). In order to do so, the key CSE elements of *enabling environment*, *corporate social intrapreneur* and *corporate purpose* were used to generate scale items. Eight subject matter experts were engaged to test the face validity of the scale. Following scale refinement based on the feedback provided by the experts, 156 participants completed the CSE scale. Exploratory and confirmatory factor analysis results indicated that a seven factor model had the best fit. Strong reliability values for each of the seven factors (i.e. subscales) as well as for the CSE scale in totality suggested that scale construction yielded an instrument with good internal consistency. The second aim was to provide an assessment of the impact of CSE on the organisational effectiveness variables employee engagement, organisational citizenship behaviour and job satisfaction. With a sample of 159 participants, the correlation results of the second phase of the study indicated that CSE has a significant and positive relationship with all the organisational effectiveness variables. The multiple regression analysis indicated that only job satisfaction was predicted by CSE leadership. A path analysis was conducted which yielded a viable model that demonstrated how CSE interacts with job satisfaction and employee engagement in order to promote organisational citizenship behaviours. Thus, while it is clear further testing is required to refine the CSE scale and to better understand how it interacts with key organisational effectiveness variables, these initial results suggest a viable scale for measuring CSE has been developed. The results also suggest that CSE relates positively and significantly with the organisational effectiveness variables focused on in the study. These results, taken in totality, suggest that in a world confronted by an ever increasing demand for finite resources and given the important role corporations play in ensuring resources are responsibly utilised and replenished where possible, CSE may provide an exciting way of helping organisations achieve blended value through meaningful work that ensures the workforce is engaged, motivated and committed to doing more.

**Key words**: Corporate social entrepreneurship; Corporate social responsibility; Employee engagement; Organisational citizenship behaviour; Job satisfaction

# CONTENTS

**DECLARATION** ..... **i**

**DEDICATION** ..... **ii**

**ACKNOWLEDGEMENTS** ..... **iii**

**ABSTRACT** ..... **v**

**CHAPTER 1: INTRODUCTION AND STUDY AIMS** ..... **1**

1.1 Introduction ..... 1

1.2 Corporate Social Entrepreneurship (CSE) ..... 4

1.2.1 Summarising Corporate Social Entrepreneurship ..... 4

1.3 Research aims ..... 5

**CHAPTER 2: THESIS STRUCTURE** ..... **6**

2.1 Study overview ..... 6

2.2 Thesis structure ..... 6

**CHAPTER 3: SUSTAINABLE DEVELOPMENT AND CORPORATE SOCIAL RESPONSIBILITY** ..... **10**

3.1 Chapter introduction ..... 10

3.2 Sustainable development: context and definition ..... 10

3.3 Sustainable development and the role of corporations ..... 11

3.4 Corporate Social Responsibility and sustainable development ..... 11

3.5 Corporate Social Responsibility ..... 12

3.6 Conceptual paradoxes of Corporate Social Responsibility ..... 13

3.7 The evolution of Corporate Social Responsibility ..... 13

3.7.1 Internal organisational factors ..... 13

3.7.2 External organisational factors ..... 15

3.8 Outlining institutional theory ..... 17

**CHAPTER 4: ENTREPRENEURSHIP, CORPORATE ENTREPRENEURSHIP AND SOCIAL ENTREPRENEURSHIP** ..... **20**

4.1 Chapter introduction ..... 20

4.2 Entrepreneurship ..... 20

4.3 Corporate Entrepreneurship ..... 22

4.4 Social Entrepreneurship ..... 24

4.5 The emergence of Corporate Social Entrepreneurship ..... 31
4.6 Corporate Social Entrepreneurship ..... 32
4.7 Conceptual heritage of Corporate Social Entrepreneurship ..... 34
4.7.1 Creating an enabling environment ..... 34
4.7.2 Fostering corporate social intrapreneurs ..... 35
4.7.3 Amplifying corporate purpose and values ..... 36
4.7.4 Building strategic alliances ..... 37
4.7.5 Generating double value ..... 38
4.7.6 The current study's interpretation of the five elements of CSE ..... 38
4.7.7 Corporate Social Entrepreneurship and meaningful work ..... 39
**CHAPTER 5: ORGANISATIONAL EFFECTIVENESS CONSTRUCTS, RESEARCH HYPOTHESES AND QUESTIONS ..... 41**
5.1 Chapter introduction ..... 41
5.2 Employee Engagement ..... 41
5.3 Organisational Citizenship Behaviour (OCB) ..... 45
5.4 Job Satisfaction ..... 48
5.5 Social consciousness as a driver of meaningful work ..... 50
5.6 Research gap ..... 51
5.7 Aim of the study ..... 52
5.8 Rationale ..... 52
5.9 Research questions and hypotheses ..... 53
**CHAPTER 6: METHODS ..... 54**
6.1 Chapter introduction ..... 54
6.2 Research design ..... 54
6.3 Sample and sampling strategy for phase one ..... 55
6.4 Procedure ..... 55
6.4.1 Phase one: Scale development overview ..... 55
6.4.2 Item generation ..... 56
6.4.3 Content validity ..... 58
6.4.4 Conclusion and summary of subject matter expert feedback ..... 62

6.4.5 Preparation and scale administration ..... 63
6.5 Phase one measures ..... 64
6.5.1 Biographical Questionnaire ..... 64
6.5.2 Corporate Social Entrepreneurship Scale ..... 64
6.6 Phase one analysis ..... 64
6.6.1 Exploratory Factor Analysis ..... 64
6.6.2 Confirmatory Factor Analysis ..... 65
6.6.3 Reliability analysis ..... 65
6.6.4 Descriptive Statistics ..... 66
6.7 Phase two ..... 66
6.7.1 Phase two sample and sampling strategy ..... 66
6.7.2 Procedure ..... 67
6.7.3 Measures for phase two ..... 68
6.7.4 Analysis ..... 70
6.8 Ethical considerations ..... 71
**CHAPTER 7: RESULTS ..... 73**
7.1 Chapter introduction ..... 73
7.2 Phase one results and discussion ..... 74
7.2.1 Descriptive statistics ..... 74
7.2.2 Parallel analysis and scree plot ..... 75
7.2.3 Exploratory factor analysis ..... 78
7.2.4 Factor extraction technique ..... 80
7.2.5 Unpacking the factor loadings ..... 81
7.2.6 Model variance ..... 85
7.2.7 Confirmatory factor analysis ..... 86
7.2.8 Instrument reliability ..... 89
7.2.9 Results summary ..... 90
7.3 Phase two results ..... 92
7.3.1 Descriptive statistics ..... 92
7.3.2 Sample characteristics ..... 92

7.3.3 Tenure, age and industry ..... 94
7.3.4 Normality ..... 96
7.3.5 Reliability ..... 99
7.3.6 Pearson correlation ..... 101
7.3.7 Spearman's Correlation ..... 102
7.3.8 Multiple linear regression ..... 102
7.3.9 Multicollinearity ..... 102
7.3.10 Normality ..... 104
7.3.11 Multiple linear regression: employee engagement ..... 107
7.3.12 Multiple linear regression: organisational citizenship behaviour ..... 108
7.3.13 Multiple linear regression: Job satisfaction ..... 109
7.3.14 Structural equation modelling ..... 110
7.3.15 Path analysis ..... 110
7.4 Results summary ..... 112
7.5 Conclusion ..... 113
**CHAPTER 8: DISCUSSION ..... 114**
8.1 Introduction ..... 114
8.2 The study's aim and rationale ..... 114
8.3 Phase one discussion summary ..... 115
8.4 Phase two ..... 117
8.4.1 Phase two hypotheses ..... 117
8.4.2 Practical and theoretical implications ..... 138
8.4.3 Limitations and directions for future research ..... 141
8.4.4 Conclusion ..... 143
Reference list ..... 145
Appendix 1: Phase one organisational access request letter ..... 159
Appendix 2: Phase two organisational request access letter ..... 160
Appendix 3: Phase one scale review participant information sheet ..... 161
Appendix 4: Phase one consent form ..... 162
Appendix 5: Phase one participation information sheet ..... 163

Appendix 6: Phase two participant information sheet ..... 164
Appendix 7: Biographical questionnaire ..... 165
Appendix 8: Draft CSE Scale ..... 167
Appendix 9: CSE Scale ..... 170
Appendix 10: Employee Engagement Scale ..... 174
Appendix 11: OCB scale ..... 175
Appendix 12: Job satisfaction scale ..... 176
Appendix 13: The Corporate Entrepreneurship Assessment Instrument (CEAI) ..... 177
Appendix 14: Ethical Clearance Certificate ..... 180

# LIST OF TABLES

Table 1: Item generation summary by CSE element ..... 58

Table 2: Demographic description of subject matter experts ..... 59

Table 3: Standardised loadings ..... 84

Table 4: Summary of factor analysis results ..... 88

Table 5: Latent variable reliability values ..... 89

Table 6: Gender, Race and Education ..... 93

Table 7: Descriptive statistics table ..... 95

Table 8: Corporate social entrepreneurship reliability analysis ..... 100

Table 9: Corporate social entrepreneurship and employee engagement ..... 101

Table 10: Corporate social entrepreneurship, organisational citizenship behaviour and job satisfaction ..... 102

Table 11: Corporate social entrepreneurship correlation matrix ..... 103

Table 12: Multiple linear regression model for dependent variable employee engagement. 107

Table 13: CSE regression coefficients for employee engagement ..... 107

Table 14: Multiple linear regression model for dependent variable OCB ..... 108

Table 15: CSE regression coefficients for OCB ..... 108

Table 16: Multiple linear regression model for dependent variable job satisfaction ..... 109

Table 17: CSE regression coefficients for Job Satisfaction ..... 109

Table 18: Model fit indices for path models ..... 111

# LIST OF FIGURES

Figure 1: Role player summary description ..... 29
Figure 2: Descriptive statistics..... 75
Figure 3: Parallel analysis ..... 77
Figure 4: Scree Plot..... 78
Figure 5: EFA standardised loadings matrix..... 80
Figure 6: Factor extraction ..... 81
Figure 7: Variance analysis ..... 85
Figure 8: Lavaan six factor CFA model..... 87
Figure 9: Lavaan seven factor CFA model..... 88
Figure 10: Histogram of CSE scale (i.e. Ultra) ..... 96
Figure 11: Histogram of OCB scale data distribution..... 98
Figure 12: Histogram of Job satisfaction scale data distribution..... 98
Figure 13: Histogram of Employee Engagement data distribution ..... 99
Figure 14: Normal P-Plot for Organisational Citizenship Behaviour..... 106
Figure 15: Normal P-Plot for Job satisfaction..... 106
Figure 16: Diagram of path analyses ..... 111

# CHAPTER 1: INTRODUCTION AND STUDY AIMS

## 1.1 Introduction

In a global context increasingly characterised by significant and concerning resource constraint challenges, corporations, as important players in the realm of responsible and sustainable development, face more challenges in achieving their economic goals than has been the case in the past (Altwegg, Roth & Scheller, 2004; Le Blanc, 2015; Thatcher, 2014; Van der Voet, Kuipers & Groeneveld, 2015). All institutions should play their role in fulfilling the broad but important requirements outlined in Brundtland's (1987) definition of sustainable development which refers to "development that meets the needs of the present without compromising the ability of future generations to meet their own needs (p. 37)." Businesses are constantly working to understand and adapt their practices to dynamic, and demanding circumstances. Either they do so or risk fading into obsolescence given the increasingly regulated and competitive commercial landscape (Altwegg et al, 2004; Van der Voet, Kuipers & Groeneveld, 2015). The risk of failure is made a reality not only by society but by members of these institutions (whether by direct or indirect association). In the case of corporations in particular, members would include employees. The risk of not meeting these expectations therefore carries the risk of placing an organisation's purpose in harm's way both from within and externally. Put differently, organisational members may base their decision to stay motivated, productive and engaged on whether the organisation behaves in a manner that heeds the need to play its part in achieving sustainable development outcomes (Holliday, Schmidheiny & Watts, 2017; Meister, 2012). Indeed, their status as members may ultimately rest upon it. This internal dynamic is important to understand and forms an important part of the study's general focus and research aims.

The realisation that sustainable development is a critical consideration for all stakeholders and institutions is not new. It has been a reality for some time and predates even Brundlant's (1987) definition. Indeed, sustainable development has been discussed and debated for a number of decades, which has allowed established corporations to make sense of what it means for them. Emerging organisations have been shaped by this imperative; whereby the founders have understood the importance of sustainable development in relation to organisational longevity and success (Holliday et al, 2017; Carroll, 2006; Zadek, 2005). Put differently, organisations of all kinds have had to come to terms with what the creation of

credible and robust socially and environmentally responsible programmes that benefit the communities and environments in which they operate could possibly look like (Carroll, 2006; Crook, 2005; Zadek, 2001; 2005).

The framework many organisations have chosen to apply when attempting to construct solutions that could enable credible participation in the achievement of sustainable development goals has been that of corporate social responsibility (CSR) (Carroll, 2006). In applying this framework, organisations have typically made a public commitment to being responsible corporate citizens and reported on the initiatives they are undertaking to play their role in utilising the resources they require, responsibly and sustainably. This is now common practice, particularly for well-established organisations of scale.

Given the kind of enabling framework CSR is meant to provide to organisations, it has become a topic of great interest, particularly in the academic field. The lines of enquiry, in that regard, have ranged from the deeply philosophical to the uncompromisingly practical. The academic work has tended to focus on the nature, application and efficacy of CSR (Carroll, 2006; Thatcher, 2014; Zadek, 2001). Specifically, questions around definitions have been explored (Sheehy, 2015), and to a lesser extent, the origins of the construct have been considered (Carroll, 2006, Zadek, 2001).

Like many other concepts in academia, there has been significant debate on what an appropriate definition of CSR actually is. (Carroll, 2006; Sheehy, 2015). In outlining the different definition 'frames' of CSR, Sheehy (2015) explains how CSR can be characterised behaviourally as an act of philanthropy or the sacrificing of profits. The other version Sheehy outlined is one of CSR as a stakeholder management tool, regulated by the deliberate internal policies and processes of an organisation. Sheehy asserts that simply conforming or being seen to conform to specific global standards (e.g. ISO or UN standards) on a particular issue could be seen as CSR as well (2015).

Carroll, studying the evolution of the definition of CSR from the 1950s, noted how it was initially referred to as social responsibility in a manner that did not fully acknowledge the influence of corporations (2006). Based on his observations, Carroll (2006) suggested that CSR, (defined then only as social responsibility), referred more to the responsibilities of the businessperson and focussed on what their moral responsibilities, along with managers, ought to be. Carroll notes that momentum on the subject and its definitional dimensions seemed to pick up in the 1960s. He makes specific mention of a definition put forward by Davis (1960)

which stated that social responsibility referred to "businessmen's decisions and actions taken for reasons at least partially beyond the firm's direct economic or technical interest" (Davis, 1960, p. 70). It is at this point the realisation and acknowledgement that an organisation may not be sustainable if it only focussed on its economic mandate (Spitzeck, Boechat & Lea˜o, 2013), may have started to emerge.

While it may not have been clear to Davis (1960) early on, in some of his later work he asserted that the social responsibility of an organisation needed to be commensurate with its social power, indicating an appreciation of the power and impact organisations have and the responsibility they had to carry as a result. Carroll noted how definitions in the 1970s started incorporating a stakeholder-based approach (e.g. employees, suppliers, regulators etc.). By the 1980s and 1990s a shift from a focus on definitions and a move to empirical enquiry started to develop. Possible alternative or complementary concepts relating to CSR also started to be considered (e.g. corporate responsibility, creating shared value). Even with this shift, there was consensus, however, that in order to meet the requirements of CSR corporates had to be socially supportive, law abiding and ethical (Carroll, 1983).

The question of the application and efficacy of CSR is largely where the empirical work has been done. As the urgency has increased on matters of sustainable development so too has the need to understand how much of a difference CSR has made (Carroll, 2006; Le Blanc, 2015; Zadek, 2001). Zadek (2001) pointed out that that many corporations tend to adopt a compliance-based approach to CSR so that they are seen to be doing and saying the right things. However, because of this compliance-based mindset the initiatives can lack depth and substance. They are therefore evaluated as being shallow and a product of a tick-box approach (Zadek, 2005). Studies on CSR, however, have tended to focus on external evaluations of how effectively corporations have performed in this area and the internal effects of CSR have not been given as much attention (i.e. perceptions of organisational members and the impact of these initiatives on them) (Abdullah & Rashid, 2012; Bhattacharya & Sen, 2004). The current study seeks to address this by trying to understand the internal impact of CSE.

There are important questions that are worth considering regarding internal perceptions of CSR - how do employees themselves evaluate the efficacy of their organisations' CSR? What does it mean to them; and how does it affect the manner in which they approach their work and the general disposition they have toward their organisation? These are questions that

have not been well explored in the literature. External evaluations are important, but, organisational members' opinions are a relevant and important source of feedback, especially in relation to how it affects their behaviours/attitudes at work.

### 1.2 Corporate Social Entrepreneurship (CSE)

Some of the dissatisfaction expressed with the quality and impact of CSR initiatives, described above, created an opportunity for exploring ideas that either bolster the general approach to CSR or extend it (Carroll, 2006; Zadek, 2005). Corporate social entrepreneurship (CSE), the primary subject of this study, is one such concept. As understood in this study, CSE is an extension of CSR rather than an alternative to it. In conceptualising CSE, Austin and Reficco (2009), on whose work the current study is based, used the general criticism levelled against CSR to argue for CSE. They aimed to construct a theoretical framework that could improve CSR and its impact. No research could be found that either used or verified the conceptual framework developed by them. The aim of the current study, therefore, is to use Austin and Reficco's framework to develop a measure of CSE and to use this measure to assess its relationship with specific organisational psychology variables. While a summary of the construct is provided below, a more detailed exposition will be provided in chapter four. This is done so that the thesis can provide a largely chronological sequence of events where the constructs emergence and development is concerned.

#### 1.2.1 Summarising Corporate Social Entrepreneurship

Corporate social entrepreneurship, as defined and understood in this research, is a nascent concept that attempts to identify those characteristics required by an organisation to enable the achievement of socially responsible and commercially profitable goals (Austin & Reffico, 2009). Following detailed case studies of CSE in two organisations, as well as desktop analyses of various other companies, Austin and Reffico (2009) concluded that CSE is able to better enable the attainment of blended value (i.e. profits and socially meaningful organisational actions and outcomes) through a clear set of conceptual building blocks and process steps. They concluded that CSE needs to be viewed as a process aimed at accelerating and improving how CSR is approached by organisations. Based on their research, they proposed that CSE will lead to more impactful outcomes that would therefore address many of the criticisms levelled against traditional CSR.

### 1.3 Research aims

In the context of a complex global business environment that continues to demand more of organisations, and the potential for CSE to start addressing some of these demands by going beyond traditional CSR, the need for academic research in this field is apparent. The specific focus of the study on CSE's impact on employees allows for this exploration in a meaningful and impactful way. The approach provides a data set that can describe how employees view CSE and how effective it could be in helping improve organisational effectiveness.

The specific aims of the study are:

1. To develop a measure of CSE based on Austin and Reficco's framework
2. To assess the relationship between CSE and employee engagement, organisational citizenship behaviour and job satisfaction.

# CHAPTER 2: THESIS STRUCTURE

## 2.1 Study overview

The current study aims to contribute to the literature by addressing a research gap in the field of corporate social responsibility (CSR). Following an assessment of the literature, it has become apparent that a disproportionately large quantity of the work done on CSR has focused on two aspects. The first aspect has been research aimed at trying to understand the nature of the impact CSR initiatives undertaken by organisations have had on the external environment (Carroll, 2006; Crook, 2005; Zadek, 2001; 2005). The second, more foundational aspect, has been research focused on trying to understand what organisational characteristics need to be in place for ensuring that CSR is ingrained into the way an organisation functions (Berns et al, 2009; Bonini & Gorner, 2011; Nidumolu Prahalad & Rangaswami, 2009). There has been very little research that has attempted to understand the impact CSR has on the internal dynamics of an organisation (Spitzeck, Boechat & Lea˜o, 2013). More specifically, a distinct absence of a focus on the impact CSR initiatives have on an organisation's workforce is apparent.

The current study aims to address this gap in the literature by focusing on the impact that the construct of corporate social entrepreneurship (CSE), loosely defined here as a process organisations follow to effectively engage and enhance CSR initiatives, has on the organisational effectiveness constructs of employee engagement, organisational citizenship behaviour and job satisfaction. To that end the study's two primary aims are to develop a CSE scale and then deploy it in the organisational context to explore its impact on the three organisational effectiveness constructs. In the broader context of attempting to understand what factors contribute towards creating meaningful work for employees in the context of blended value creation, studying the impact that CSE has on important organisational effectiveness constructs is a valuable endeavour that contributes to the literature in a different way.

## 2.2 Thesis structure

At this point the thesis has provided an introductory chapter to contextualise the research. In that same chapter a summary description of CSE was provided. The chapter concluded by outlining the research aims. The current chapter provides an overview of the study in more

specific terms and outlines the structure of the rest of the thesis. Chapter three of the thesis begins with a description of some of the sustainability imperatives facing the world and how sustainable development has been defined. It then provides a brief overview of the role corporations have played in contributing to sustainable development imperatives over time. The thesis then introduces the concept of CSR. Following a definition of the concept, a brief discussion on how CSR interfaces with the idea of corporations contributing towards sustainable development goals is provided along with some paradoxical aspects of CSR as it relates to organisations in specific industries (e.g. Alcohol, Tobacco etc.). The thesis then goes into depth regarding some of the key drivers of CSR. In order to provide a framework that makes sense of the drivers discussed from a theoretical perspective, Institutional Theory is discussed. The end of that discussion leads to the conclusion of chapter three.

Chapter four focuses on three things. Firstly, discussing the individual conceptual elements that make up the construct of CSE. This will be in the form of a detailed elucidation of the building blocks of corporate social entrepreneurship. To that end, a review of the literature pertaining to entrepreneurship, corporate entrepreneurship and social entrepreneurship will be presented. During this discussion, a comprehensive overview of each of the three constructs will be provided. This will include a discussion on the evolution of entrepreneurship predicted by prominent *Austrian-American* economist Peter Schumpeter. The almost parallel ascension of social entrepreneurship with corporate entrepreneurship, as well as how its underlying principles have been incorporated into the corporate context, will also be discussed.

The second focus area will be a discussion on the emergence of the CSE construct. In this section synergies and tensions involved in transferring the principles of entrepreneurship into the organisational context (i.e. corporate entrepreneurship), as well as those involved in taking it a step further to incorporate social entrepreneurship (i.e. corporate social entrepreneurship). The thesis will resolve that notwithstanding some valid theoretical tensions between corporate and social entrepreneurship the relatively new construct of corporate social entrepreneurship is theoretically sound and, more importantly, holds significant practical value.

The third section of this chapter will unpack the construct of CSE and outline the enabling conditions required for the presence and/or activation of CSE within a corporate organisational environment. In so doing the thesis will highlight important methodological

considerations relevant to sample selection for the current study. This will be followed by a brief elucidation of the current study's interpretation of CSE. The chapter will be concluded following a discussion on the potential role CSE might play in creating meaningful work. In doing so, the thesis will introduce three internal organisational effectiveness constructs that could be considered important in shaping meaningful work and driving internal organisational functioning (i.e. employee engagement, organisational citizenship behaviour and job satisfaction). The importance of assessing these three constructs in relation to CSE will be discussed.

Chapter five provides an overview of the organisational effectiveness constructs that form a key part of the study and elaborates on the role of CSE in creating meaningful work. The next section discusses empirical work on CSE as well as some of its conceptual building blocks. This will entail providing a comprehensive overview of the empirical work done in relation to CSE and its constituent components in the context of internal organisational functioning. Some of the empirical research evaluated will look at observations made at a cross-national level and at the individual, team and organisational levels with regards to corporate entrepreneurship in particular. The chapter concludes with a discussion on why sustainable development programmes serve as the best indicator of CSE and a restatement of the study aims and rationale. Empirical work on CSE will then be shown to be extremely limited, and effectively non-existent when it comes to understanding its impact *within* an organisation. That conclusion will reveal an obvious gap in the literature which the current study is aiming to address. That is, it will be shown that research in the area of CSE has not focused on internal organisational dynamics regarding the potential impact it may have on the workforce. This will also bring to light the fact that an instrument for measuring CSE has not been developed and lead to the aims and rationale of the present study, followed by the research questions and hypotheses.

Chapter six will discuss the current study's methodology and here a description of the research design employed, sample and sampling technique used, procedure followed, measuring instruments deployed and ethical matters considered for the study will be provided. The next chapter will provide the results of the statistical analyses conducted to answer the research questions. Descriptive statistics pertaining to variables such as gender, tenure, age and race will also be provided. The conclusion of the results chapter will lead the thesis to its eighth and final chapter. This chapter of the thesis will provide a discussion of the

results and draw on empirical and theoretical work to make sense of these results. Finally, a concise section discussing the strengths and limitations of the study, as well as opportunities for future research in the field will be provided and represent the completion of the thesis.

# CHAPTER 3: SUSTAINABLE DEVELOPMENT AND CORPORATE SOCIAL RESPONSIBILITY

## 3.1 Chapter introduction

In this chapter an overview of sustainable development and CSR is provided. So too is a discussion on the evolution of CSR and some of its key drivers. A brief discussion on institutional theory and how it might be a useful framework for understanding the need for and evolution of CSR is also presented.

## 3.2 Sustainable development: context and definition

The question of resource scarcity and preservation has been a priority topic for different stakeholders across the globe (Barnett & Morse, 1963; Boserup, 2017; Smith 2012). With the rise of industrialisation, mass consumption and globalisation the question of how long our planet's natural resources can sustain us, has become more and more important. The rapid rise in global population numbers is a concern as researchers have argued that world resources can accommodate approximately 10 billion people (Wolchover, 2011) - a number that seems to be approaching at an increasingly rapid pace. That, coupled with the increasing human lifespan, negative changes to environmental conditions, and the effects of global, large-scale production across numerous industries, has also endangered and increased the pressure on natural resources (Livi-Bacci, 2012; 2017; Kaneda, Greenbaum & Patierno, 2018; Poston & Bouvier, 2013; Wolchover 2011). These challenges are clear examples of why sustainable development is high on the agenda of many institutions concerned with the welfare and future of the world.

Against this background, corporates have also had to concern themselves with the role they play in society, how they interact with the environment and the way they use social and natural resources. (Holliday, 2017). They too have had to reflect on how they can contribute towards a sustainable planet, which involves engaging with the notion of sustainable development.

The concept of sustainable development has been covered across a number of disciplines (e.g. economics, engineering, management sciences, social sciences, biology, agriculture, geography) and Thatcher (2012) reports "approximately three hundred" definition variations of sustainable development (p. 3893). If the number of definitions highlights one thing, it is

that few areas are more topical right now and even fewer areas of enquiry do not, in some way, interact with the notion of sustainable development.

In the introduction section reference was made to the most popular definition of sustainable development. This is a definition that was developed by Brundtlant, for the World Commission on Environment and Development (WCED). Brundtland's (1987) definition of sustainable development is "development that meets the needs of the present without compromising the ability of future generations to meet their own needs" (p. 37). What is striking about this definition is just how broad it is. The detailed 247 page report provides many examples of sustainability challenges that make a broad definition necessary. For instance, the growing human population, strained ecosystems and endangered specifies, energy depletion and the role of outer space exploration in sustained planetary viability are some of the topics discussed (Brundtland, 1987; Kates, Parris & Leiserowitz, 2005).

### 3.3 Sustainable development and the role of corporations

There is a long history of corporate behaviours across the globe that have had significant negative effects socially, environmentally and economically (Epstein, 2018). These include political interference (e.g. Arms and nuclear competition between nations), environmental destruction (e.g. The Deepwater Horizon oil spill by BP), labour exploitation (e.g. human trafficking and slavery) and white collar crimes (e.g. criminal practices by accounting and financial services firms). These negative examples illustrate that corporations can have a significant impact, directly and indirectly, on the environments in which they operate (Aguinis & Glavas, 2012; Carroll, 2006; Frederick, 1960; Zadek, 2005). In addition, given the size and power of many multinationals, they are seen as one of the biggest role players in matters of planetary health and sustainability across all three elements (i.e. economy, nature and society) (Brundtland, 1987).

### 3.4 Corporate Social Responsibility and sustainable development

In order to approach the question of sustainable development with a good level of structure corporations have used the notion of corporate social responsibility as a guiding framework (Austin & Reficco, 2009; Carroll, 2006; Hemingway, 2013; Zadek, 2001). It is important to discuss CSR by focusing on salient factors that drove its rise to prominence while also focusing on how it has evolved over time, the nexus it shares with sustainable development and some of the criticism levelled against the construct.

### 3.5 Corporate Social Responsibility

Corporate Social Responsibility (CSR) is a concept that numerous organisations across the globe have embraced and actively engaged in response to the challenge of sustainability (Brammer, Jackson & Matten, 2012; Carroll, 2006). Some organisations use it purely from a policy perspective, some as an integral part of their business strategy, and others as an approach to managing stakeholders effectively or signalling to the market that business ethics matter (Aguinis & Glavas 2012; Carroll, 2006).

Much like sustainable development, the definition of CSR has never been uniformly agreed upon. It is still helpful to present some conceptualisations to aid our understanding of the construct. In an important piece of research, Sheehy (2015) provides an overview of some definitions of CSR. One of the definitions mentioned by Sheehy (2015), for instance, is that of sacrificing profits for philanthropic purposes. Another conceptualisation characterised CSR as corporate activity focused on social and environmental challenges while conforming to international and local standards (e.g. ISO 26000 or UN GRI standards). The concept of CSR has also been described as one in which it is an internal management system aimed at improving relations with various stakeholders. (Sheehy, 2015). That is, a structured management approach consisting of processes, organisational structures and procedures that enable effective stakeholder management. A popular definition outlined by Carroll (1979) states that CSR "encompasses the economic, legal, ethical, and discretionary expectations that society has of organisations at a given point in time" (p. 500).

Like many concepts, however, the definition of CSR will differ, at times dramatically, depending on a number of factors. These include geo-politics, culture and stakeholder interests and expectations (e.g. NGOs, academics, public officials, directors etc.). What is more, depending on the sector or area of interest a particular stakeholder group may fall into (e.g. NGO), there will probably be additional definitional deviations and conflicts within that grouping (Aguinis & Glavas, 2012).

The current study prefers the comprehensive definition provided by Carroll (1979) in that CSR should be viewed as the creation of environmental and social value by corporations in a manner that is in line with the expectations of society. This understanding of CSR allows us to accommodate the argument that CSR means different things in different environments (e.g. In South Africa one could argue CSR means contributions focussed on education, healthcare

and poverty alleviation while in Germany, it is to provide high quality and safe finished goods). Even within the South African context, depending on the province, the social and environmental issues might differ and require specific and bespoke initiatives compared to other provinces.

### 3.6 Conceptual paradoxes of Corporate Social Responsibility

Despite the positive impression companies implementing CSR try to create, there are tensions that emerge. Consider the firearms industry as an example. What sense would we make of a corporation operating in this industry providing a monetary donation for education, healthcare or any cause meant to be socially uplifting when the core business they are involved in is the manufacture of products that are designed to inflict significant damage to society and the environment, whatever the reason.

The tobacco industry is another example. It is well understood that corporations involved in this industry typically fund many research projects on subjects of significance to humanity in a bid to play their part in progressing the world. The fact that the use of their products is linked strongly to serious and negative health risks does raise questions about the legitimacy of CSR in such instances (e.g. cancers, lung diseases and cognitive deficiencies) (Swan & Lessov-Schlaggar, 2007).

### 3.7 The evolution of Corporate Social Responsibility

Aguinis and Glavas (2012) provide a useful overview of the evolution of the CSR. They argue that CSR was first deemed an admirable but largely unnecessary and distracting endeavour for corporations to engage in (Davis, 1960; Dodd, 1932; Frederick, 1960). With time, this view started to change and CSR began being seen as more of a necessity (Zadek, 2005; Carroll, 2006). This change over time may have come as a result of a combination of factors that can be broadly classified as internal and external to the organisation (Aguinis & Glavas, 2012). These factors will now be discussed, starting with the internal organisational factors.

#### 3.7.1 Internal organisational factors

Some of the internal organisational factors promoting the need for a more socially conscious approach to organisational operating models include an increasingly vocal and socially conscious workforce, as well as the pursuit of a more balanced approach when it comes to how organisational performance is understood (Carroll, 2006; Sun & Yu, 2015). This allowed

for change from within organisations to incrementally manifest as the leadership and employees began to understand the importance society placed on responsible corporate citizenship and sustainable business practices.

Workers and leaders within organisations were active participants in the change of attitude from viewing CSR as a compliance requirement to a more prosocial and proactive approach to doing business (Carroll, 2006; Zadek, 2005). This incorporated a culture of care for the environment and desire to improve the socio-economic conditions of the communities in which the organisation operated. An understanding that companies that show that they care about the role they play in the broader eco-system had competitive advantages was also an incentive for these organisations to change their mindset and commitment toward corporate social responsibility (Sun & Yu, 2015). The realisable benefit for organisations that adopted this mindset was the clear enhancement of their brands and reputations. Understanding this benefit saw organisations increase their efforts to make CSR programmes more visible over time (Bartikowski, Walsh & Beatty, 2011; Carroll, 2006).

Other internal organisational components that may have influenced how the achievement of sustainable development and socially responsible corporate behaviour is realised, include organisational policies and processes that direct employees' behavioural expectations relating to CSR (Carroll, 1999). Beyond the policies set out by an organisation, another important mechanism for ensuring CSR is implemented and monitored appropriately is through the relevant governance structures (e.g. board sub-committees). At board level, oversight responsibilities may also consist of risk assessments and recommendations in respect of CSR. These internal elements remain very important parts of the explanation for the drive towards more responsible behaviour by organisations (Aguinis & Glavas 2012; Carroll, 1999; 2006; Zadek, 2005; Fredrick, 1960). All of these internal elements have played a part in creating an approach to doing business that is, on the surface at least, completely different from past approaches that prioritised profits at almost all costs and were dismissive of the social and environmental responsibilities related to their activities (Aguinis & Glavas 2012; Carroll, 1999; 2006; Zadek, 2005; Fredrick, 1960).

Thus, it can be argued there are internal factors that have been critical to the corporate progression towards sustainable behaviour double value. Crucially though, it is the many external factors that have increased over time that could be seen to have really encouraged

corporations towards a more well-rounded business orientation (Brammer, Jackson & Matten, 2012; Campbell, 2007). The main external factors are now discussed.

### 3.7.2 External organisational factors

In his work on the internal and external factors of corporate sustainability drivers Lozano (2013) identified three external elements as the most important. These elements were reputation, customer demands and expectations as well as regulation and legislation.

Reputation can be defined as the awareness or perception external and internal stakeholders hold of a person or entity, the evaluation or judgement that stems from that awareness or perception and the subsequent value ascribed to that person or entity (Barnett, Jermier & Lafferty, 2006). It is an almost intangible asset a firm creates over time, through various strategies and mechanisms that affect how interactions with various stakeholders will develop (Barnett et al, 2006).

Corporates are judged, semantically anyway, in very similar ways to human beings. They are assigned human characteristics like *good* or *bad*, *decent*, *committed*, *honest*, *generous*, and *responsible*. These judgements determine the attitudes other people and entities will take on when engaging with or about these entities in private conversations, media discussions and other forums. Corporate social responsibility allows corporations to help determine, through visible actions, what the external (and internal) narrative that forms around them will be with regards to reputation.

The second external element discussed by Lozano (2013) as a key driver of an increased orientation toward CSR is customer demands and expectations. Typically, customer demands and expectations relate to the delivery of high quality products and services in a consistent manner. In recent times however, customer expectations and demands have transcended product and service based transactions. Expectations now consist of considerations such as the kind of organisation customers believe they are buying from (Lozano, 2013). A number of customers and clients expect the organisations they are purchasing from to show a commitment to making a positive impact on societal and environmental issues (Zadek, 2001). They also expect organisations to have sound internal processes including responsible supply chains, progressive human resource policies and strong ethical leadership. Under these conditions it is possible that a superior product can fail simply because an organisation is seen to be neglecting, going against or underperforming in relation to CSR (Lozano, 2013).

Thus, expectations have risen on the subject of organisations being held accountable for acting irresponsibly. This is especially the case given the increased popularity of the social media environment that allows for perceived wrongdoing or injustice to be exposed quickly.

The third external driver identified by Lozano (2013) is that of regulation and legislation. Governments, law makers and regulators in many countries, have created regulatory frameworks and legislation which compel organisations to act in a responsible and constructive manner in respect of social and environmental elements (Zadek, 2001). Regulators and law makers have become more deliberate about articulating, in a compliance based framework, the minimum behavioural attributes they wish to see from organisations. Typically, the external incentive for organisations to act responsibly is in the form of avoidance of penalties (Lozano, 2013). The power of regulation and legislation can be properly observed once organisations fall short of those standards. That is, the consequences can be so severe that continuing to operate profitably can be hampered as a result of regulatory intervention.

There are a number of other external drivers that were identified by Lozano (2013) including the increasing awareness of society, NGOs activism, national or regional contexts, market opportunity and positioning, shareholder activism and institutional shareholders. In an environment where some of an organisation's shareholders are as demanding as NGO activists and where increasingly knowledgeable communities are demanding more socially responsible corporate behaviour of mutual benefit, organisational behaviour that respects and meets these expectations from a CSR perspective has becomes difficult to ignore. Regional dynamics influence the extent to which these external pressures are present as well as their specific nature. However, they exist in most contexts in some shape or form and corporates have found it necessary to rise to them

Institutional theory outlines the important role that external institutions can play in creating an environment conducive to good organisational behaviour and governance. Institutional theory sets out to explain the process and importance of organisations feeling compelled to build credibility and legitimacy in a way that meets and exceeds the expectations set by important institutional bodies. In that regard, it aligns well with what has been described above. Institutional theory outlines the important elements that organisations should consider when attempting to become legitimate and gain their social licence to operate effectively and with credibility. The theory's primary tenets will now be outlined and comparisons with the

kind of organisational behaviour that has been seen over time in relation to CSR will be drawn. It is important to note that the theory is not suggested as a theoretical framework as such, but a very useful tool for understanding how CSR might have come to be so important over time.

### 3.8 Outlining institutional theory

Institutional theory seeks to explain "the elaboration of rules and requirements to which organizations must conform if they are to receive support and legitimacy" (Scott & Meyer, 1983, p. 140). Institutional theory explains how social norms, rules and structures a) come into being and b) become the clear standards or authoritative guidelines for people and organisations to work towards meeting (Bruton, Ahlstrom & Li, 2010; Campbell, 2007). The institutions referred to in the theory include public and private regulatory institutions, nongovernmental and independent organisations, civil society and peer to peer interactions (Bruton et al, 2010). While each of these institutional role players is typically motivated by a specific agenda (e.g. profit, robust regulation, social cohesion etc.) they are shaped by the reality and expectations of that particular environment. A specific perspective on institutional theory that is relevant for CSR is now provided.

Bruton et al (2010) state that institutional theory provides a theoretical framework that attempts to make sense of how organisations acquire, secure and maintain positions of legitimacy and value in the environments they operate. Institutional theory, they assert, proposes three factors as the foremost drivers of organisational behaviour aimed at acquiring and maintaining legitimacy. They first mention the regulatory factor. This refers to legislation, regulatory bodies and governmental policies and agencies (Bruton et al, 2010). These formalised, rule-based structures and mechanisms provide clear direction in terms of expected behaviours and practices and tend to use a penalty and or incentive system to ensure individuals and organisations conform to their prescripts (Bruton, et al, 2010; Campbell, 2007).

The second factor proposed by institutional theory is the social component (Bruton et al, 2010). While not as formalised as the regulatory factor, this component could be seen as the most instrumental. In the context of affirming organisational legitimacy outside prevailing formal structures and policies, basic day to day interactions that organisations are involved in with their stakeholders have highlighted the importance of a genuine focus on social interactions that generate some sort of benign benefit for all parties (Brammer et al, 2012;

Bruton et al, 2010; Campbell, 2007). There has been a clear recognition that interactions with stakeholders, including customers, suppliers and communities, shape perceptions of the nature of one's organisation and, by implication, its credibility in the social domain. Therefore, an appreciation by organisations that positive social contributions (beyond formalised demands) are 'necessary' for maintaining legitimacy may have played a significant role in the increased focus and development of the manner in which organisations approach issues such as philanthropy, social investment and CSR (Brammer et al, 2012; Campbell, 2007). Indeed, interactions with employees have also increased in organisations. This is the case because there has been a realisation that they too are a critical component of entrenching perceptions of legitimacy.

Employees are de facto organisational ambassadors that may interact with key stakeholders as well. In doing so, they are likely to get a sense of how their organisation is perceived and where the opportunities for improvement are. So they are also in a position to share information with their organisation regarding the expectations of society. These are some of the expectations that also ultimately help shape the laws and regulatory environment and against which organisations are judged publicly (Scott & Meyers, 1983).

The third factor of institutional theory is the cultural component (Bruton et al, 2010). That is, the values, norms and behaviours associated with a social context. These unspoken rules can be contrasted with formalised structures as well as their associated regulatory apparatus. They speak to those belief systems and values that have been cultivated over a significant period of time and which shape the way people in a particular environment operate and interact with one another. They are the 'obvious' intangibles that an outsider must learn to appreciate and understand. Once understood they allow people to understand what is happening around them and improve the chances of being embraced in that societal context.

Institutional theory can therefore be seen as a useful framework for guiding an understanding of the evolution of CSR from an organisational perspective. It highlights the complex nature of the parameters involved in the establishment, consolidation and maintenance of organisational legitimacy. These are key elements for organisational sustainability and success. It is also useful in explaining the gradual move away from a template approach to CSR organisations subscribed to in early times to a more bespoke, context specific and sensitive position. It also provides an explanation for the emergence of corporate social entrepreneurship (Baumol, Litan, & Schramm, 2009). The following chapters build on the

contextual evolution of CSR described using institutional theory by engaging the construct of corporate social entrepreneurship. To begin with, however, the building blocks that make up corporate social entrepreneurship are introduced and discussed.

# CHAPTER 4: ENTREPRENEURSHIP, CORPORATE ENTREPRENEURSHIP AND SOCIAL ENTREPRENEURSHIP

## 4.1 Chapter introduction

This chapter will provide an overview of the individual theoretical components that make up the construct of corporate social entrepreneurship. It will begin with an overview of the constructs that make up corporate social entrepreneurship, that is, *entrepreneurship, corporate entrepreneurship and social entrepreneurship*. Once the evolution from entrepreneurship to corporate entrepreneurship has been covered, social entrepreneurship will be discussed.

## 4.2 Entrepreneurship

The word 'entrepreneur' is said to have originated from 17th and 18th century economics (Dees, 1998). Its meaning during that period, the conception of which is generally credited to an economist by the name of Jean Baptiste Say, related to the act of undertaking something of considerable economic significance. It was as the act of moving and using resources to enable the creation of greater productivity and economic output (Economist, 2009, www.economist.com/node/13565718). Dees (1998) points out that the word was closely associated with those "individuals who stimulated economic progress by finding new and better ways of doing things" (p. 2). These views are more or less in line with current views and definitions that understand entrepreneurs to be individuals who are able to find new ways to create economic value. In that sense, even at its documented point of origin, the definition spoke to the underlying role innovation and economic value creation played in entrepreneurship.

Perhaps unsurprisingly, a focus on trying to understand the "entrepreneur" was the initial point of departure many scholars took in trying to understand the construct of entrepreneurship (e.g. Kets De Vries, 1977; McClelland, 1961). They focused on motivation, background and personality traits of the entrepreneur (Mair & Marti, 2004). The basic reasoning for an individual-oriented approach focusing on traits and other psychological constructs such as motivation, was driven mostly by a desire to uncover those predictors of the propensity within individuals for entrepreneurship and the underlying drivers that amplify an individual's determination to undertake entrepreneurial activity. Questions of how to accurately measure and make sense of things such as personality, cognitive profiles as well as

a person's background were some of the challenges posed by that approach. Such work played an important role in progressing the literature on entrepreneurship (Mair & Marti, 2004). Some of the qualities of entrepreneurs identified by these studies included high confidence, resilience and motivation to make a positive impact (McClelland, 1987). Entrepreneurs tended to have a strong need for personal growth and tremendous drive.

Other researchers have focussed on the entrepreneurial process itself. This was in an attempt to delink the process of entrepreneurship from the individual (Dees, 1998). This approach, which appeared more tangible and less susceptible to the perceived vagueness or difficulty associated with understanding human qualities, enabled a more general understanding of entrepreneurship. This approach focussed on "how, by whom and with what effects opportunities to create goods and services are discovered, evaluated and exploited" (Mair & Marti, p. 6, 2004). This broader definitional scope for studying the construct allowed for a more holistic approach that interrogated how the process of value creation occurred, the timing of it and who the individuals involved were. (Dees, 1998; Mair & Marti, 2004)

To that end one of the most prominent figures associated with entrepreneurs and innovation, Joseph Schumpeter (Mair & Marti, 2004), provided a description of the process of entrepreneurship. In the 20$^{th}$ century Schumpeter proposed a description and definition of entrepreneurs as innovators (Dees, 1998). Specifically, he stated that they are responsible for "doing [ ] new things or [ ] things that are already being done in a new way" (Schumpeter, 1947, p. 151). Schumpeter referred to the process of "creative destruction" as one undertaken by entrepreneurs in an attempt to de-stabilise the prevailing capitalistic order in a particular sector or industry and bring about a new product or service or a new way to deliver something that was already there (Dees, 1998; Mair & Marti, 2004; Santos, 2009). Through the exploitation of new or untested technologies or methods, one of many ways proposed by Schumpeter for bringing about "creative destruction", entrepreneurs could fulfil their fundamental purpose which was to "reform or revolutionise the pattern of production" (Dees, 1998, p. 3). Austin and Reficco (2009) acknowledge Schumpeter's theorising as the beginning of the conceptualisation of CSE, stating that "CSE's conceptual roots begin with Schumpeter's vision that nations' innovation and technological change emanate from individual entrepreneurs with their *unternehmergist (i.e. entrepreneurship)*" (2009, p.2). In the case of CSE, innovation would be focused on reforming or revolutionising the manner in which blended value is created by organisations. Schumpeter (1947) had also argued that the

role of the individual entrepreneur would eventually be dominated by the corporation. The emergence of corporate entrepreneurship which in many respects validated Schumpeter's (1947) claim, is now discussed.

### 4.3 Corporate Entrepreneurship

Covin and Miles' (1999) define corporate entrepreneurship as "the presence of innovation plus the presence of the objective of rejuvenating or purposefully redefining organizations, markets, or industries in order to create or sustain competitive superiority" (p. 50). Van Wyk and Adonisi (2012) define corporate entrepreneurship as "the diversification and escalation of businesses, leading to the development of new businesses within existing companies to enhance competitiveness, productivity and profitability" (p. 3048). They also identify the numerous names used interchangeably with corporate entrepreneurship such as Intrapreneurship and Corporate Venturing.

Corbet, Covin, O'Connor and Tucci (2013) posit that corporate entrepreneurship is a mechanism that "renews established organisations thereby facilitating their viability and competitiveness through the utilization of various innovation-based initiatives" (p. 812). They then describe a number of definitions by other authors. One of these definitions sees corporate entrepreneurship as the act of corporate venturing through the creation of new entities or partnerships. Another definition describes corporate entrepreneurship as a form of strategic renewal which turns on some form of innovation for large organisations. They then present a definition of corporate entrepreneurship which incorporates corporate venturing and strategic entrepreneurship. This version is positioned as the latest and most comprehensive iteration of corporate entrepreneurship because it integrates the disruptive innovation element proposed by Schumpeter (1947) as well as the concept of strategic renewal with organisation redefinition that enables generative, new business creation (Corbet et al, 2013).

Corporate entrepreneurship forms part of the three key building blocks of corporate social entrepreneurship. An overview of the known origins and general nature of entrepreneurship has been provided. The concept of corporate entrepreneurship has also been introduced and explained. The discussion will now focus on a popular instrument used to measure corporate entrepreneurship - the Corporate Entrepreneurship Assessment Instrument (CEAI) developed by Hornsby, Kuratko and Zahra (2002).

The CEAI measures the following dimensions: **a) management support b) work discretion c) rewards d) time availability and e) organisational boundaries**.

The first dimension assessed as part of the CEAI is management support. This covers the extent to which employees feel or perceive their managers provide the necessary encouragement regarding the presentation and implementation of new ideas and processes. That is, "[t]he extent to which one perceives that top management support, facilitate, and promote entrepreneurial behaviour, including the championing of innovate ideas and providing the resources people require to take entrepreneurial actions" (Kuratko, Hornsby & Covin, 2014, p. 39). It refers to an inclination by leadership to enable employee initiative by making the environment conducive to that kind of behaviour through leadership by example and making resources available for employees who are keen to try new and exciting ideas. A few examples of items that cover this dimension include, *Upper management is aware and very receptive to my ideas and suggestions; Those employees who come up with innovative ideas on their own often receive management encouragement for their activities, money is often available to get new project ideas off the ground.*

The second dimension is work discretion. This dimension focuses on the extent to which employees feel they have a level of freedom to do their work and some latitude to make mistakes. It is about job aspects such as autonomy, accountability and flexibility. Kuratko, Hornsby and Covin (2014) assert that it refers to "[t]he extent to which one perceives that the organisation tolerates failure, provides decision-making latitude and freedom from excessive oversight" (p. 39). Example items include, *I feel that I am my own boss and do not have to double check all of my decisions with someone else; This organization provides the freedom to use my own judgment and harsh criticism and punishment result from mistakes made on the job (reverse item).*

The third dimension is rewards and reinforcement. This dimension is about how the recognition and reward process provided by the organisation is seen to encourage entrepreneurial endeavour. These environments would typically reward risk taking and experimentation that leads to good organisational outcomes, while also not generally penalising the same behaviour if the outcomes are not favourable. Some items for this dimension include, *The rewards I receive are dependent upon my innovation on the job* and *my manager would tell his/her boss if my work was outstanding.*

The fourth dimension is time availability. This dimension refers to the extent to which employees feel they are given enough time to not only do their work, but think about ways of improving the way they work as well. Often, jobs can be so all-consuming that people do not have the chance to think about how they could do their work differently and better or innovate. In the researchers' words time availability talks to "a perception that the workload schedules ensure extra time for individuals and groups to pursue innovations, with jobs structured in ways to support such efforts". For corporate entrepreneurship to work, providing employees with sufficient time to actually think of new ideas is pivotal and so creating structures that achieve that outcome is key. Sample items include, *I have just the right amount of time and workload to do everything well and my co-workers and I always find time for long-term problem solving.*

The last dimension is organisational boundaries. This dimension focuses on the extent to which there is clarity and flexibility regarding operating practices and information sharing in relation to internal (with departments and divisions) and external (organisations that can be partnered with) apparatus that promote collaboration for the purpose of achieving innovation. This dimension of the construct incorporates the job clarity component quite strongly. Some examples of items include, *in the past three months, I have always followed standard operating procedures or practices to do my major tasks; on my job I have no doubt of what is expected of me* and *there is little uncertainty in my job.*

Corporate entrepreneurship, as constructed by Hornsby et al (2002), measures the extent to which the dimensions discussed are experienced within the organisational context (see Appendix 13). This is done to determine the extent to which corporate entrepreneurship is experienced in both broad (organisational) and specific (individual) terms. It gives a clear understanding of how researchers have operationalised the construct in the academic environment. Having discussed all these aspects in relation to corporate entrepreneurship, social entrepreneurship which is the remaining concept composite in corporate social entrepreneurship, can be discussed.

### 4.4 Social Entrepreneurship

In a global context that is arguably challenged by ever diminishing natural resources, alarming environmental and social degradation (e.g. poverty, unemployment, water scarcity, retreat to an agenda of nationalism, climate change, poor waste management and a rapidly growing human population) many have argued that a different way of addressing all of these

issues is required. Entrepreneurship in the traditional sense is not enough. Indeed, some feel it may be one of the major contributors to the problems being experienced (Santos, 2009). Invention and innovation inclined towards tackling these challenges is required and social entrepreneurship is an approach that could provide some guidance in that respect. A useful starting point for the concept of social entrepreneurship is how it has been defined.

Dees (1998) proposes a definition of social entrepreneurship that is primarily an alteration and extension of the definition of entrepreneurship, as understood in the conceptualisations stemming from traditional entrepreneurship theory and research. According to Dees (1998) the social entrepreneur's primary focus on a particular social mission differentiates them from traditional entrepreneurs (corporate entrepreneurs are included even if not necessarily "traditional"). The definition, though, does not simply turn on a basic and semantically logical interpretation of terms.

There is an added layer of complexity that is implied by the notion of a "social mission" that requires consideration when constructing a meaningful definition (Dees, 1998). As such, Dees (1998) argues that a social entrepreneur is a change agent that adopts a mission to create and sustain social value; identifies and doggedly pursues new opportunities to serve the mission; constantly innovates, adapts and learns; acts boldly, is not restricted by a lack of resources and; has a heightened sense of accountability to those that they serve as well as for the outcomes that they create. Another definition of social entrepreneurship is provided by Mair and Marti (2004). They describe social entrepreneurship as a "process involving the innovative use and combination of resources to pursue opportunities to catalyse social change and/or address social needs" (p. 3). The two authors argue that it is important to make clear distinctions between the concepts of social entrepreneurship, social enterprises and social entrepreneurs. They believe that this will enable the appropriate contextual framing of theoretical and empirical discussions in the field. To that end, they argue that the term 'social entrepreneurship' typically focuses on processes or behaviours while the term 'social entrepreneur' focuses on the founder of an initiative which may lead to the realisation of a social enterprise. Lastly, they explain that they view the term 'social enterprise' as centred on the actual outcomes of social entrepreneurship (i.e. the result/s of the processes followed and/or behaviours demonstrated in bringing the initiative to life).

It is evident from their definition that a social entrepreneur could be seen as a catalyst for social change or an individual who deals with a particular social need through the innovative

use of resources. Another key characteristic of a social entrepreneur touched on by Mair and Marti (2004) is the importance placed on social value creation instead of the accrual of financial benefits. That is, social value creation and development as opposed to economic value capturing, is an important definitional aspect that needs to be accounted for when attempting to define a social entrepreneur and the mission of their enterprise.

Another definition of social entrepreneurship is provided by Bornstein (2004), which gives a fairly broad definition of social entrepreneurs as people who have new ideas to deal with major social challenges and who are persistent in working to realise their ideas.

Boschee (1998) describes social entrepreneurs as not-for-profit executives who constantly try to find the balance between moral imperatives and revenue generating activities for their underlying social mission. Boschee's (1998) description seems to open the path for a role (or number of roles) in an organisation that is focused on social value creation.

Thompson, Alvy and Lees (2000) define social entrepreneurs as individuals who realise there is an opportunity to satisfy an unmet need and then gather the necessary resources to meet that particular need while Harding (2006) defends the idea that social entrepreneurs are fundamentally driven by social goals rather than profit and that any revenue generated is reinvested back towards the achievement of social goals instead of being returned to shareholders, as is typically the case for commercial enterprises.

The last conceptualisation of social entrepreneurship presented is that of Santos (2009). In a working paper aimed at advancing theory development in the field of social entrepreneurship Santos (2009) proposes what is termed a positive theory of social entrepreneurship. Essentially, Santos (2009) states that social entrepreneurship is an organising process that should be viewed as being distinct from organising processes found in the business and social sectors.

In the process of developing his conceptualisation Santos (2009) notes a few things that have been problematic in the past which need to be addressed if a sound understanding is to be developed. He notes that most of the definitions have emerged from empirical data points found by practitioners in the field. Santos (2009) asserts that this may be problematic because no theoretical paradigm is used to understand the concept of a social entrepreneur. This may lead to narrow conceptualisations influenced purely by experienced meaning (i.e. the case being studied) which may be devoid of theoretical depth. One of the unfortunate

consequences of such a practitioner driven approach is the erroneous tendency to define social entrepreneurs tautologically as entrepreneurs with a social mission (Santos, 2009). This seemingly circular reference pointed out by Santos (2009) in logic, which uses the word 'social' in defining a social entrepreneur, is both vexing and probably untenable theoretically (Santos, 2009). As a result, as far as theory development is concerned, it is unlikely to lead to any satisfactory conclusion in attempting to define social entrepreneurship effectively. Santos (2009) points out that definitions of social entrepreneurs have varied from idealised conceptualisations defining them as change agents (e.g. Dees, 1998; 2001) to more pragmatic conceptualisations simply claiming that they are involved in the generation of earned income through their ventures in order to realise social outcomes (e.g. Harding, 2006). In delineating his conceptualisation Santos (2009) presents four propositions to make clear what social entrepreneurship entails.

Proposition one is that "[A]ddressing problems involving neglected positive externalities is the distinctive domain of action of social entrepreneurship." Proposition two is that "[s]ocial entrepreneurs are more likely to operate in areas with localised positive externalities that benefit a powerless segment of the population." Proposition three is that "[s]ocial entrepreneurs are more likely to seek sustainable solutions than to seek sustainable advantages." And the fourth and last propositions states that "[s]ocial entrepreneurs are more likely to develop a solution built on the logic of empowerment than on the logic of control." (Santos, 2009, p. 41). These elements are what make social entrepreneurship distinct from both the business and traditional social sectors. It is worth outlining what each proposition actually means and how they all fit in together.

The first proposition addresses **where** social entrepreneurship plays a central role. Santos (2009) argues that where there is no business case for commercial entities to get involved and where there is not enough capacity or resources for governments to intervene (neglected positive externalities), is precisely where social entrepreneurship operates and obtains its legitimacy. It is at this intersection "where the potential for value creation is not matched by the potential for value appropriation" where social entrepreneurship is needed.

The second proposition provides even greater specificity regarding where social entrepreneurship plays a role and also elaborates on the profile of the beneficiaries. That is, social entrepreneurship, while generally addressing matters that have high potential for being beneficial for most societal members, is much more likely to focus on localised (i.e. a specific

segment of the population) opportunities. What is more, in those specific areas of localisation where the opportunities for value creation exist and are far higher than the potential for value appropriation, social entrepreneurship would focus primarily on helping disenfranchised populations (e.g. minority groups, the indigent, the elderly etc.).

The third proposition deals with the nature of the solutions developed by social entrepreneurs which again helps with how they are different from commercial entrepreneurs. That is, in addition to their primary goal to focus on value creation for the powerless or vulnerable, social entrepreneurs seem more likely to aim to ensure that their solutions have a strong likelihood of remaining in place over a significant period of time. Sustainability is fundamental for social entrepreneurs as they understand that to tackle specific challenges or take advantage of opportunities to make a positive social change, the solutions put in place must be able to deal with the problem effectively by withstanding, and also being capable of evolving with time. In simple terms, "sustainable solutions are approaches that either permanently address the root causes of the problem or institutionalise a system that continuously addresses the problem, ideally with minimal intervention from the original innovators" (Santos, 2009, p. 33). This is in contrast with commercial entrepreneurship, Santos (2009) argues, in the sense that commercial entities typically seek a sustainable competitive advantage which will ensure they remain profitable.

The final proposition put forward by Santos (2009) states that the logic behind the solutions proposed by social entrepreneurs is that of empowerment. Here instead of exerting a logic of control, which is what commercial entrepreneurs and enterprises typically do, the social entrepreneur works to increase the capabilities of the beneficiaries so they can address the challenges faced with less reliance on the social enterprise. This is, in part, because social entrepreneurs do not ordinarily possess sufficient resources to consistently be available to deal with the problem. Indeed, the sustainability component discussed in proposition three is largely a function of beneficiaries becoming active contributors to solutions as opposed to active recipients. And because they are a powerless section of the population, empowerment becomes all the more important and the mechanisms used for doing so are a critical part of implementation. So the four propositions set out by Santos (2009) provide a robust outline of what social entrepreneurship is about according to the author.

The conceptualisation provided by Santos (2009) seems to encapsulate most of the common themes that emerge from the definitions presented thus far (e.g. innovation, value creation,

sustainable solutions, heightened accountability etc.) and arguably adds some aspects that are not explicit in any of the other definitions (e.g. neglected positive externalities as the reason for the need for social entrepreneurship and minority populations and the general target of social entrepreneurial interventions/innovations). The current study views this approach as the most comprehensive and persuasive with regard the idea of what social entrepreneurship is. Santos (2009) also provided a summary of how social entrepreneurship differs from other types of organisations when it comes to roles, goals and forms of action in the broader economic system. The summary description is useful in positioning the various organisations and explaining their respective reasons for being. The figure extracted from Santos (2009) below provides a summary of how these organisations differ.

**Figure 1: Role player summary description**

| Characteristics | Governments | Business | Charity | Commercial Entrepreneurship | Social Activism | Social Entrepreneurship |
|---|---|---|---|---|---|---|
| **Distinct Role in Economic System** | Centralized mechanism through which the infrastructure of the economic system is created and enforced (and public goods provisioned) | Distributed mechanism through which society's resources and skills are allocated to the most valued activities | Distributed mechanism through which economic outcomes are made more equitable despite uneven resource endowments | Distributed mechanism through which neglected opportunities for profit are explored | Distributed mechanism through which behaviors that bring negative externalities are selected out | Distributed mechanism through which neglected positive externalities are internalized in the economic system |
| **Dominant Institutional Goal** | Defend Public interest | Create sustainable advantage | Support disadvantaged populations | Appropriate value for stakeholders | Change social system | Deliver sustainable solution |
| **Dominant Logic of Action** | Regulation | Control | Goodwill | Innovation | Political action | Empowerment |

Having discussed social entrepreneurship in conceptual terms, the thesis will focus briefly on some examples of social entrepreneurship to help bring the concept alive in practical terms.

The literature on social entrepreneurship typically focuses on a core number of real-world examples when attempting to bring the concept alive. These examples will also be used. One of the more popular examples of social entrepreneurship cited is that of the Grameen Bank in Bangladesh (Marti & Mair, 2004) which was established in 1976. The Grameen Bank changed the lives of millions by providing financial services and support to the poor. More specifically, the Grameen Bank provided access to finance to women to enable them to combat poverty in their communities through the establishment of profitable businesses, which the bank helps them build (Marti & Mair, 2004).

The Aravind Eye Hospital, which was also founded in 1976 in India, is another example cited as a good example of social entrepreneurship. This hospital, "offered eye-care services and cataract surgery to cure blindness at a very small fraction of the cost of such services in the developed world" (Marti & Mair, 2004, p. 5). The Hospital is described as working on price discrimination model that results in almost half of the patients paying nothing for the service, 18% of them paying two thirds and 35% of people paying significantly more. The authors note that the model has been so successful that it has been replicated in a number of countries across the globe (e.g. Kenya, Egypt, Guatemala etc.). What is more, as a result of having clear access to this service, the majority of those people were then able to get their jobs back which were lost as a result of eye problems.

Another popular example of social entrepreneurship is Gram Vikas. This social enterprise focuses on addressing water and sanitation issues in rural areas through transforming the savings of villagers into an endowment that can generate interest. This enables the water and sanitation challenges experienced by villagers to be dealt with as and when they arise through the provision of the required funding and resources (Santos, 2009). The key principle guiding how Gram Vikas works is equality. All the beneficiaries in the villages receive the same quality solutions (e.g. bathrooms, irrigation systems, toilets etc.). Gender equality and full participation by the community are also important elements of the approach adopted by Gram Vikas. While challenging, the approach adopted is seen as robust and best configured to lead to sustainable solutions for the community (Santos, 2009).

One of the most prominent, global social entrepreneurship organisation is the Ashoka organisation founded by Bill Drayton. Ashoka identifies and supports the best social entrepreneurs around the globe (https://www.ashoka.org/en-us/focus/social-entrepreneurship). The support provided to social entrepreneurs is enabled through Ashoka's network of partners (e.g. professional services firms, academic institutions, financial donors, government agencies etc.). These partners enable Ashoka to make a variety of resources available to social entrepreneurs. Knowledge sharing between social entrepreneurs operating in the Ashoka organisation is also a critical component for success. Whatever their initiatives may focus on, the goal is always to develop system-changing solutions that propel positive social change (https://www.ashoka.org/en-us/nuestra-historia-0).

These examples confirm the many definitions of social entrepreneurship that have been provided. In particular, they align closely to the views of Santos (2009) in terms of the four

propositions he put forward. That is, these solutions focus on issues commercial entities and government institutions have no interest in engaging, focus on powerless populations, aim to sustainably deal with the issue and work to empower the beneficiaries instead of controlling them.

Armed with this perspective as well as a clear understanding of entrepreneurship and corporate entrepreneurship, an important question for the central construct of this research study arises. That is, to what extent is an attempt at amalgamating or integrating the concepts of entrepreneurship, corporate entrepreneurship and social entrepreneurship sensible? It seems a bold challenge given the underlying principles and objectives of each construct. Put differently, can the concept of corporate social entrepreneurship actually make sense, given its constituent parts? The paper will now consider this below.

In the business sector, the common denominator of economic actors is that they are driven to defend the interests of the dominant organisational coalition (e.g. shareholders, owner-managers, partners etc.). Social entrepreneurship does not operate in that manner and rather focuses on initiatives that benefit society or specific individuals (minority populations). Yet social entrepreneurs operate in the same environment as economically-driven actors, even competing for some of the same resources including goodwill funding and intellectual capital (Dees, 2001; Harding, 2006; Mulgan, Tucker, Ali & Sanders 2007; Santos, 2009).

Thus, it is difficult to capture the spirit of what social entrepreneurship aims to achieve within a corporate framework. In order for the construct to be credible it needs to demonstrate how it remains true to the core principles of social entrepreneurship while simultaneously protecting the interests of the dominant organisational coalition. A discussion on CSE will be useful in addressing this. The history and evolution of entrepreneurship has been discussed along with some of the different forms it has taken over tine. It is now appropriate to discuss corporate social entrepreneurship.

### 4.5 The emergence of Corporate Social Entrepreneurship

The notion that it is of critical importance for corporations to play an active, positive role within the societies they operate is not a new idea (Carroll, 2006). Indeed, it has been a generally accepted principle most organisations seem to subscribe to in varying degrees (Zadek, 2005). Of course, and as discussed earlier, this view was not always so obvious. It was preceded by a period of ideological debate that interrogated what the true nature and

purpose of the corporation actually was (Carroll, 2006). As time passed and the debate evolved, there was a gradual acceptance by corporations that they could not focus solely on extracting maximum value and profits while showing little or no regard for the communities, societies, economies and ecological realities (i.e. the general ecosystem) that they interfaced with in the process of doing so.

As a result of these debates and realisations, the formation, development and practise of activities relating to the concept of CSR started to become more popular. The concept of CSR, aimed to provide a guiding framework to enable corporations to build into their modes of operation, principles around contributing positively and meaningfully to society and the natural environment while also looking after their financial interests. Corporate social entrepreneurship aims to build on the broad principles of CSR and attempts to enrich them. Corporate social entrepreneurship will now be examined, starting with a definition of the construct.

### 4.6 Corporate Social Entrepreneurship

The concept of Corporate Social Entrepreneurship (CSE) is defined as "the process of extending the firm's domain of competence and corresponding opportunity set through innovative leveraging of resources, both within and outside its direct control, aimed at the simultaneous creation of economic and social value" (Austin & Reficco, 2009, p. 2). This definition suggests that CSE is a mechanism through which firms increase their capabilities, and in so doing, open up new possibilities in terms of various business opportunities. They achieve this by using the resources they have at their disposal, both internal and external, in novel and progressive ways. The definition of CSE also suggests that the underlying motive for all of this activity is the simultaneous creation of social and economic value. That is to say that when employing this approach, corporation's fundamental objective is to ensure that both the social and commercial aspects of the business are addressed.

Austin and Reficco's (2009) definition provide an indication of what the critical components of the CSE construct would be. What is not clear from the definition, is the extent to which both social and economic goals are pursued as objectives. That is, do they enjoy the same level of importance or does one follow only after the other is satisfied?

The architects of CSE view it as an accelerant that can be used by organisations to fast-track their transformation into authentic and effective producers of social value. In their own

words, Austin and Reficco (2009) state that "[t]he fundamental purpose of CSE is to accelerate companies' organizational transformation into more powerful generators of societal betterment" (p. 2). This explanation by the authors would seem to imply that social objectives are, at the very least, just as important as economic objectives for the concept of CSE.

The authors also make it clear that CSE should be seen as a catalyst for harnessing more efficient and effective CSR results and not an alternative version to or of it. There is something more significant that is implied by their definition of CSE though. Specifically, that CSE can enable organisations to change from being largely profit-driven entities. That is, that organisations can move away from compliant behaviour in terms of CSR to actually building socio-environmental consciousness (i.e. improving societal and environmental welfare) into the way they operate. This is significant because it provides a method of organising and implementing primarily driven by the need to engender the core principles of sustainable development into ways of working.

Another author who engages the specific topic of CSE is Hemingway (2013). Her approach focuses on the individual within an organisation and their ability and willingness to exercise agency with respect to driving socially responsible behaviour. Put differently, more than corporate social entrepreneurship, it is about the corporate social entrepreneur (*CSE*).

Indeed, Hemingway (2013) provides a conceptualisation of different kinds of corporate social entrepreneurs based on an empirical study investigating *CSE* (e.g. active *CSE* and concealed *CSE*). In general terms, the empirical work done seems to try to understand how the role of a supportive culture (or lack thereof) and the individual's personal values (i.e. self-transcendent vs self-enhancement) could shape the kind of behaviour an individual is likely to demonstrate and the type of *CSE* (or not - i.e. conformist and disassociated) they could be. So the work is very much focused on the individual and the different interlocking dynamics between the person and the organisation.

As the current study's focus is on the version of CSE applied by Austin and Reficco (2009) and having discussed a different perspective on CSE, it is time to discuss in detail the construct, as it has been conceptualised by Austin and Reficco (2009).

### 4.7 Conceptual heritage of Corporate Social Entrepreneurship

Corporate social entrepreneurship is underpinned by and builds upon *three* concepts (Austin et al., 2006).These conceptual building blocks are Entrepreneurship, Corporate Entrepreneurship and Social Entrepreneurship. Each of these were discussed earlier as the evolution from entrepreneurship to CSE was charted.

The construct of CSE in the current study, is understood to consist of *five* key elements that were determined by Austin and Reficco (2009) based on their findings from two detailed case-studies of organisations perceived to be pioneers of CSE – Starbucks Coffee and The Timberland Company – as well as a desktop review of several other leading organisations (Austin, Herman & Quinn, 2004; 2006; Austin & Reavis, 2002; Austin, Wei-Skillern & Gendron, 2004). Through interviews conducted with some of the most senior representatives of these two organisations the researchers were able to gather data that would help them solidify their conceptualisation of CSE. For instance, Austin and Reficco (2009) make reference to a quote by the former CEO of Starbucks coffee where the idea of "aligning self-interest to social responsibility" (p. 3) is seen as the key to a sustainable business. Where Timberland is concerned, a company representative was quoted as stating that an "awareness of values is what [they] are trying to raise with [employees]" (Ausin & Reficco, 2009, p. 3). Timberland's commitment to a set of values placing "humanity, humility, integrity, and excellence" at the centre of the organisation's priorities also helped the researchers develop their concept of CSE (Austin & Reficco, 2009, p. 3) which would eventually consist of five key elements.

The five elements that characterise CSE are: *creating an enabling environment, fostering corporate social intrapreneurs, amplifying corporate purpose and values, generating double value and building strategic alliances*. Each of these elements will now be discussed.

#### 4.7.1 Creating an enabling environment

The element of an 'enabling environment' is described by Austin and Reficco (2009) as one that is characterised by the adoption of an entrepreneurial frame of mind by organisational members. It is also characterised by the cultivation of "an entrepreneurial environment that enables fundamental organisational transformation" (p. 2). The authors argue that such an environment can only be realised if the leaders within the organisation champion the change. So, a compelling statement of intent from the organisation's top leaders that outlines a vision of a sustainable business driven by a socially conscious and entrepreneurial mind-set is

essential (Austin et al, 2004; Austin & Reficco, 2009; Zadek, 2005). Put differently, an enabling environment can be described as one characterised by an atmosphere, created as a result of clear leadership support, that fully encourages organisational members to explore ideas and possibilities that will transform the organisation and keep it on a healthy renewal cycle. This atmosphere, in tangible terms consists of a work environment that promotes flexibility, experimentation and progressive approaches to problem solving. The idea is to liberate organisational members, within reason, so they can pursue organisational goals in nuanced ways. This element of CSE is, in large part, focused on the importance of leadership in creating an enabling environment.

### 4.7.2 Fostering corporate social intrapreneurs

The second element of CSE is the idea of developing Corporate Social Intrapreneurs. In order to understand what a Corporate Social Intrapreneur is, it is important to understand what an intrapreneur is. An intrapreneur is an employee that demonstrates a large number of the qualities that would be found in an entrepreneur (Van Wyk & Adonisi, 2012). The main difference between the two would be the fact that entrepreneurs typically own and lead businesses while intrapreneurs function in their capacity as employees with an entrepreneur-like spirit focused on improving different aspects of the business. The notion of an intrapreneur exists in the realm of corporate entrepreneurship as well but there are key differences between the corporate entrepreneur and the corporate social intrapreneur according to Austin and Reficco (2009).

The basic argument is that the role of a corporate social intrapreneur is linked to or coexists with that of a manager within an organisation while the corporate entrepreneur's role is generally seen as one that is separate from that of a manager. This is because the corporate entrepreneur is seen as the initiator of important projects and the manager makes sure the operation runs smoothly. The corporate social intrapreneurs are considered a permanent fixture in an organisation. They are not individuals that start something and allow others to manage it. Instead, they are, as the word "intra" would suggest, constantly present and there to ensure the organisation takes on a progressively transformative mindset driven by innovation and the ambition to create value holistically and responsibly (Austin & Reficco, 2009). Ultimately, they exist to enable organisations to take their CSR initiatives to greater heights.

Some of the key characteristics of CSIntrapreneurs identified by Austin and Reficco (2009) include an ability to galvanise internal resources throughout the organisation and be strong change champions. Austin and Reficco (2009) make it clear that the role of a CSIntrapreneur is likely to be played by people with a strong sense of social consciousness. Indeed, the authors use many descriptors to give a sense of what CSIntrapreneurs should be. They use words like catalyst, contributor, coordinator, champion, communicator and calculator. Unsurprisingly, their characterisation is not too dissimilar to how Dees (1998) described and defined the social entrepreneur.

Separate from the actual characteristics required by CSIntrapreneurs as described in the previous paragraph, it is also essential that the organisational conditions needed for such a role to succeed are in place, and continue to be reinforced by those fulfilling this role as well as the organisation's leadership tier. That is to say, an enabling environment or atmosphere is fundamental to the success of the corporate social intrapreneur and one that is, conversely, fostered by the intrapreneur. Having discussed some of the key components that play a role in creating an enabling environment, in discussing the third element of CSE (*amplifying corporate purpose and values*) the current study will likely be touching on a more foundational contributor to the realisation of an enabling environment. The third element of CSE is now elaborated on.

### 4.7.3 Amplifying corporate purpose and values

Amplifying corporate values is about being or becoming a values-based organisation that can stand credibly, through sustained action, as positive societal contributors (Austin et al, 2004). In the context of CSE, that would imply being an organisation that is driven by the fundamental belief that economic, social and environmental prosperity are all intimately and inextricably related to one another. As such, the organisation's members are seen to have a genuine belief in the power and value of socially and environmentally sound modes of economically viable activities.

What is more, these values are clearly identifiable in the mission and value statement of the organisation and form the standard against which the organisation as well as all its stakeholders judge that organisation (Austin et al, 2004). The values discussed ultimately influence the strategic priorities an organisation pursues and this is evident in how an organisation goes beyond compliance with legal requirements and suggested international benchmarks by actually being at the forefront of social value creation in its industry. These

organisations would typically aim to be or see themselves "as trustworthy, moral agents, capable of generating trust based on sustained ethical behavio[u]r and innovative solutions to social problems" (Austin & Reficco, 2009, p. 4). In other words, the social entrepreneurial core of the corporation should be experienced through action and tangible evidence enabled by a blend of focused innovation and proactive, progressive transparency.

When discussing organisational values a clear mission statement and taxonomy of values that shape and embody the organisation's identity are used to help employees commit to creating social value. Austin and Reficco (2009) point out, having this sense of shared value across the organisation also makes coordinating across functional lines easier and allows for the kind of collaboration required in large corporations. The concept of CSE and the importance its architects attribute to the notion of values reinforce the significant role they play in organisational functioning. It is that congruence between stated intent (mission and values) and aligned behaviour that foster trust. Values are a core contributor to the creation of an enabling environment and something that organisational leadership as well as CSIntrapreneurs need to consistently communicate to organisational members by setting the example required for others to follow.

### 4.7.4 Building strategic alliances

Another element of CSE proposed by Austin and Reficco (2009) is the co-generation of value. What they are referring to here is the establishment and maintenance of strategic alliances that enable the vision of the organisation to be achieved. It is common cause that no single organisation has all the tools, relationships, capabilities and resources to achieve every goal. As a result, organisations that have the ambition to expand their reach, whatever that may mean for them, do so using various methods. The co-generation of value is something organisations aim to co-create through partnerships with stakeholders that align to their interests and share their values. These partnerships could be with public sector entities, other corporations or civil society organisations (Austin & Reficco, 2009). In particular, this element falls squarely in the domain of building capacity that exists beyond the firm's own capabilities and competence. Establishing and building relationships and partnerships with individuals and/or organisations that can augment a firm's ability to deliver on its primary objective is seen as a defining characteristic of CSE. This takes on greater importance given the potential complexity that could be found in the value chain of an organisation pursuing the creation of different forms of value.

Another aspect of an enabling environment highlighted by Austin and Reficco (2009) is cross-functional cooperation within an organisation. While certainly not what the authors meant when referring to strategic alliances, internal collaboration is also a critical enabler of CSE that could be viewed as a more organic form of strategic alliance. That is, in an effort to be innovative in a socially entrepreneurial manner, corporations require a well-coordinated effort that effectively integrates various capabilities in the optimal manner and at the right time. In order for this to happen, organisational silos need to be demolished and leaders of different functions need to embrace the idea of work principles underpinned by a fundamental belief and commitment to blended value (Zadek, 2005). Enabled by the leadership of the organisation and supported by CSIntrapreneurs, internal collaboration is essential and strengthens the case for and potential efficacy of external alliances. The last element of CSE pertains to the actual creation of value. This is discussed next.

### 4.7.5 Generating double value

Entrepreneurship, in all its forms, is essentially about finding and creating value through innovation. This is the process Schumpeter (1947) described as creative destruction. A process that brings newness through the process of challenging well-established conventions. In the case of CSE the aim is to "ensure that the very purpose of these corporations migrates from one of maximizing returns to investors to optimizing returns to stakeholders, with those being defined as groups who are significantly affected by company actions and who can in turn impact the company" (Austin & Reficco, 2009, p. 5). This broader focus seems to align, to a certain extent, to the definition of social entrepreneurship provided by Santos (2009).

The migration to a value creation approach focused on a broader stakeholder grouping than just the shareholders or dominant coalition is critical for the long term sustainability of the corporation (Austin & Reficco, 2009; Santos, 2009). It represents what the authors refer to as social or triple value (i.e. economic, social and environmental). Therefore, through innovative means enabled by all of the CSE elements discussed, achieving these different 'value types' in an integrated manner can enhance business performance and continuity over a significant period of time (Austin & Reficco, 2009).

### 4.7.6 The current study's interpretation of the five elements of CSE

An analysis of the five elements proposed by Austin and Reficco (2009) reveals that four of the elements could be seen as inputs and one may actually be viewed as an output. To be clear, the elements of *creating an enabling environment*, *fostering social intrapreneurs*,

*amplifying corporate purpose and values,* and *building strategic alliances* could be logically seen as internal processes (i.e. actions that should be undertaken) that need to be actively engaged to ensure the organisation generates double value. In that sense, double value could reasonably be viewed as a continuous end product that represents the sum total of all internal processes successfully undertaken by an organisation. This distinction between inputs and outputs is important because by using the term 'generating' blended value, Austin and Reficco (2009) create the impression that it is a process parallel to the other elements when it may actually equate to an outcome realised through the four other elements. Given the continuous and fluid nature of the constructs, however, the nature of salient inputs and outputs would likely turn on when an organisation chooses to measure performance. The theoretical interpretation that the current research therefore subscribes to is that of double value being viewed as a continuous outcome that is made possible, in any combination of ways, through the realisation of at least one of the four elements that are defined here as the organisations' internal processes at a specified period in time.

### 4.7.7 Corporate Social Entrepreneurship and meaningful work

Employee engagement, organisational citizenship behaviour and job satisfaction are all relatively well-researched constructs in the field of organisational psychology (Saks, 2006; Saks & Gruman, 2014; Roberts, 2006). These constructs have been assessed in a number of ways in the context of organisational behaviour and effectiveness (Robbins et al, 2003). They are constructs that have received significant attention in the theoretical and empirical domains because they are topical areas that have been, and remain, of significant interest to organisational leaders for some time. Insights regarding internal organisational factors (e.g. leadership, remuneration, culture etc.) that influence the willingness of an employee to stay with (or leave) an organisation and want to work hard and perform their job to the best of their abilities (or not) carry significant value. These constructs are of interest in a 'world of work' context where organisational leaders are searching for employee focused approaches and solutions that are able to make the work environment more enjoyable and meaningful for organisational members. In that sense, a positive organisational CSE may prove to be a positive contributor to meaningful work and provide a way of engaging organisational members positively whilst meeting business objectives.

In the context of a growing need for organisations to conceive and implement sustainable programmes to promote organisational longevity, a good CSE is a possible tool to facilitate

the development and realisation of sustainable development initiatives. From an internal organisational perspective, assessing the impact of CSE on the three employee-centred constructs may also provide important insights regarding the impact CSE may have in making work more *engaging* and *meaningful*. While the notion of meaningful work is not fully captured by the three organisational constructs the current study has chosen, engagement, organisational citizenship behaviour and job satisfaction are constructs that can give a strong indication of the extent to which organisational members find their work fulfilling. This is immediately apparent if there is an understanding that a) employee engagement means being fully absorbed in one's work and work environment; b) organisational citizenship behaviour implies being ready to go beyond the call of duty to help colleagues and the organisation and c) job satisfaction refers to a general state of contentment with one's job situation. Meaning can be complex to capture in any context, however, these three constructs, in combination, provide a solid basis for understanding the concept in the organisational context, and in relation to CSE in this particular instance. These organisational psychology constructs are the constructs that will now be discussed.

# CHAPTER 5: ORGANISATIONAL EFFECTIVENESS CONSTRUCTS, RESEARCH HYPOTHESES AND QUESTIONS

## 5.1 Chapter introduction

In the following chapter three organisational effectiveness constructs central to the current study are discussed. The discussion will focus on employee engagement, organisational citizenship behaviour and job satisfaction. Following this discussion the study's rationale and aims will be restated. The chapter will then conclude with the research hypotheses and questions the current study is focusing on.

## 5.2 Employee Engagement

Employee engagement is a construct that has been the subject of considerable empirical investigation recently (Andrew & Sofian, 2012; Mone et al, 2011). Numerous scholars have attempted to understand employee engagement's constituent parts as well as its antecedents, influencers and consequences. These efforts are attributed by most academics to the fact that employee engagement has enjoyed significant attention in the practical world (both in conceptualisation and application by practitioners) but the empirical work in the academic domain has only recently caught up (Mone et al, 2011; Saks, 2006). So the popularity employee engagement has enjoyed in the corporate world has become a motivating factor for understanding it in some detail in the academic arena.

The construct of employee engagement is important to measure in the context of CSE because understanding the extent to which CSE engenders psychological presence could have useful practical implications regarding the creation of meaningful work (job engagement) and a vibrant organisation (organisational engagement). Beyond that, understanding the relationship between engagement and CSE might also give insights on how important social conscious actions by corporations are to their employees.

There are probably four significant iterations the concept of engagement has gone through (Thomas International, 2015). In broad conceptual terms the different iterations, in sequential order are (1) the work-role model of engagement, (2) Engagement as the opposite of burnout, (3) Engagement as psychological wellbeing, and (4) the psycho-social model of engagement.

The work-role model of engagement was provided by Kahn (1990). Kahn (1990) defined employee engagement as "the 'harnessing of organizational members' selves to their work

roles; in engagement, people employ and express themselves physically, cognitively and emotionally during role performances" (p. 694). Saks (2006) as well as Andrew and Sofian (2012) highlight the strong emphasis on psychological presence in Kahn's (1990) understanding of engagement.

The psychological presence of an individual through the noticeable discharge of both cognitive and emotional effort regarding their work role, as well as through their physical demeanour (i.e. good energy levels and a sense of purpose conveyed through body language) is what constituted employee engagement for Kahn (1990). All of these components of physical, cognitive and emotional expression nestled under the broader notion of psychological presence. Disengagement was understood by Kahn (1990) as "the uncoupling of selves from work roles; in disengagement, people withdraw and defend themselves physically, cognitively, or emotionally during role performances" (Saks, 2006, p. 694). Kahn's (1990) work provided the foundation for the theoretical discourse that would follow on engagement.

Subsequent to Kahn, some researchers began to view engagement as the opposite of burnout (Maslach & Leiter, 1997). They stated that engagement is characterised by three states - energy, involvement and efficacy which are the polar opposites of the three dimensions of burnout, namely, exhaustion, cynicism and inefficacy (Maslach & Leiter, 1997; Saks, 2006). Maslach and Leiter (1997) understood burnout to represent "an erosion in value, dignity, spirit and will – an erosion of the human soul" (p. 17). The definition provided by these authors is quite vivid and underlines just how detrimental to an individual burnout could be. In explaining burnout in this manner Maslach and Leiter (1997) provided a base from which to form their argument regarding engagement being the direct psychological opposite of burnout.

The third iteration of engagement was that of understanding it as a form of psychological well-being (Schaufeli & Bakker, 2003). In addition to understanding engagement as the opposite of burnout this particular understanding of the construct viewed it as "a positive psychological state when a person feels energised at work, is absorbed in what they do and is dedicated to their job role" (Thomas International, 2015, p . 7). This understanding meant that while Schaufeli and Bakker (2003) were in agreement regarding engagement being the opposite of burnout, the felt the two constructs required different methods of measurement. Elements of the first two definitions are present in their conceptualisation, however, a clear

effort is made to highlight the specific nature of the positive psychological states that characterise engagement in this approach. That is, energy derived from the workplace, the excitement caused by the work one performs and a strong commitment to the job. All of these elements provide the basis for an engaged individual (Schaufeli & Bakker, 2003).

The fourth iteration of engagement according to Thomas International (2015) is the psycho-social model. Seemingly, this is Thomas International's own take on engagement. In this definition there is a move beyond absorption with the work environment and job to relationships one has in the workplace as they are also seen as playing a crucial role in engagement. It is proposed that both "a positive psychological and social work environment, based on [a person's] work relationships, their role and the rewards they receive" (Thomas International, 2015, p. 7)

At this point, it has been established that employee engagement has evolved over time in that some of the latter conceptual iterations of the construct incorporate and build on previous work. An example of this is how engagement as psycho-social construct draws on the work that saw engagement as psychological wellbeing. Now that some conceptualisations of engagement such as Kahn's (1990) and Schaufeli and Leiter's (2003) versions have been provided, some empirical work regarding engagement can be considered. An overview of some of the relevant research on employee engagement will now be presented.

Early empirical research on employee engagement focused on determining its antecedents and consequences. There was also research focused on determining engagement's uniqueness as a construct. To that end, studies regarding how it relates to constructs such as organisational commitment, job involvement and burnout have been conducted (Macey & Schneider, 2008; Roberts, 2006; Saks, 2006). Most of the empirical research has shown the distinct nature of employee engagement from these constructs and, importantly, how insights about employee engagement in an organisational context could allow for reasonable inferences about certain of the other constructs (e.g. affective commitment or job involvement). Despite a plethora of research on employee engagement (Albdour & Altarawneh, 2012; Dicke, Holwerda & Kontakos, 2007; Kassa & Raju, 2015; Ferreira & Oliveira, 2014) there is very little on CSE. This is likely due to the relative newness of the CSE construct, so a review of the research on the related construct of CSR will be provided.

In research conducted by Ferreira and Oliveira (2014) the question asked was what impact CSR has on employee engagement. The researchers conducted a survey with three different

groups of respondents each being presented three different CSR scenarios. The scenarios related to the focus of a particular CSR programme (i.e. general, internal & external). The researcher's findings highlighted no statistically significant differences in levels of engagement between employees who were involved in internal and external CSR practices. The results did, however, suggest that employees exposed to internal CSR were more engaged than employees who were only exposed to external CSR practices.

In a study conducted by Albdour and Altarawneh (2012) in the financial services industry in Jordan, all the hypothesised relationships between internal CSR (e.g. focus on work-life balance, health and safety, training and education and work diversity) and employee engagement were found to be positively correlated. More specifically, when looking at engagement at the job and organisation level the researchers found that internal CSR seemed to predict organisation engagement more strongly than job engagement. Another survey study conducted to determine the relationship between the two constructs found that employees who show a good level of satisfaction regarding their organisation's CSR initiatives are more engaged and more positive about the organisation's prospects (Sirota Survey Intelligence, 2007).

Based on the abovementioned research, it appears that employee engagement and CSR have largely positive associations with each other and that these occur, to varying degrees, at the organisation and job levels respectively. There is, however, limited literature and research on this topic. It therefore seems to be worth briefly assessing how employee engagement has interacted with corporate entrepreneurship.

A study by Kassa and Raju (2015) focused on investigating the relationship between corporate entrepreneurship and employee engagement. In broad terms their research indicated that a five-factor model of corporate entrepreneurship could predict engagement and that different components of engagement were explained to a large degree by corporate entrepreneurship. In motivating for the importance of their study the researchers were clear that there was a scarcity of research analysing these two constructs and hence the need for such an endeavour. As the researcher worked through the literature to find more studies on these constructs the anticipated issue of literature scarcity became clear. The only other empirical study found that focused on the two constructs in a meaningful way was by Hoque, Gwadabe and Rahman (2017). They set out to understand how corporate entrepreneurship influenced innovation performance and argued that employee engagement could be an

effective mediator between the two. Their findings revealed significant positive relationships between corporate entrepreneurship and innovation performance, corporate entrepreneurship and employee engagement and employee engagement and innovation performance. The researchers did, however, find that employee engagement did not mediate the relationship between corporate entrepreneurship and innovation performance. Even so, their findings, like Kassa and Raju's (2015), seem to indicate a positive relationship exists between corporate entrepreneurship and employee engagement.

Given all this evidence regarding employee engagement in the context of CSR and corporate entrepreneurship, it seems as though expecting a positive association between CSE and employee engagement is more than reasonable. Additionally, it is argued that it is not unreasonable to suspect that the findings for the other organisational effectiveness constructs in relation to the constructs above (i.e. CSR and corporate entrepreneurship) would be similar (Ali et al., 2010; Turban & Greening, 1997; Rettab, Brik & Mellahi, 2009; Kao, et al, 2009). In that vein the thesis now discusses organisational citizenship behaviour.

### 5.3 Organisational Citizenship Behaviour (OCB)

Organisational Citizenship Behaviour (OCB) is a construct that is used to explain those behaviours displayed by employees that go beyond their formal job descriptions, are pro-social in nature, and contribute to enhancing organisational performance (Becton, Giles & Schraeder, 2008). Given the nature of the construct and the promise it holds for organisations looking for employees who are prepared, to go 'above and beyond', it is not surprising that there is a substantial body of empirical research that has focused on analysing and understanding OCB in a range of different ways. The construct is widely recognised as having been formally brought to light by Bateman and Organ (1983). In work done a short time after introducing the construct, Organ (1988) described OCB as "individual behaviour that is discretionary, not directly or explicitly recognized by the formal reward system, and that in aggregate promotes the effective functioning of the organisation" (p. 4). And as Becton et al (2008) have pointed out, while there has been some debate regarding the definition since then, most of the research on the construct has used this understanding as a conceptual springboard.

Research on OCB has varied from exploring its potential antecedents (e.g. job satisfaction, organisational commitment and justice) to trying to understand the nature of its potential consequences (e.g. organisational and financial performance and customer satisfaction)

(Becton et al., 2008; Jafari & Bidarian, 2012; Saks, 2006). Enquires focused particularly on the latter research have generally shown that OCB has a positive, significant influence and consistently leads to desirable outcomes when it comes to general organisational performance (Becton et al., 2008). Questions pertaining to how an organisation might approach cultivating OCB have proven a little more challenging. The challenge resides in the fact that OCB can be viewed as an outcome variable which in turn has been shown to be dependent on other outcome variables like significantly positive levels of job satisfaction and affective commitment (Becton et al., 2008). It has correlated positively with these constructs; however, the obvious challenge is that these variables are themselves seen as ends or outcomes and not inputs or means. In order to create an organisational atmosphere that encourages OCB, organisations would first need to make sure that people experience good levels of job satisfaction and have a strong affinity and commitment towards the organisations they work for. Creating an atmosphere that facilitates that sort of outcome could be challenging but if achieved, not only would an organisation have loyal and happy employees, it is likely that they will also perform tasks that go well beyond the call of duty. That is the opportunity that OCB presents, and a concept that like CSE, which also implies a mindset and behaviour that transcend normal standards of organisational functioning, may provide a way of encouraging OCB. As such, looking to CSE as a possible mechanism through which to find a way of fostering OCB is one of the aims of the relevant study.

There is some research on OCB and some of the conceptual building blocks of CSE. For instance, Zehir, Muceldili and Zehir (2012), focused on medium sized businesses in Turkey to find out how corporate entrepreneurship interacts with OCB. The results indicated that a positive relationship exists between corporate entrepreneurship and OCB.

Research conducted by Oo, Jung and Park (2018) sought to understand the psychological factors linking CSR to OCB. The findings of their study revealed that the relationship between CSR and OCB was positive when mediated by the concept of organisational pride. It was also found that person-environment fit and a collectivist orientation effectively moderated the relationship between perceived CSR and OCB. In sum, the researchers found that CSR does have a positive relationship with OCB when certain mediators and moderators are taken into account.

In a study conducted by Ong, Mayer, Tost & Wellman (2018) the researchers, highlighting the growing literature on the role individual characteristics play in moderating the

relationship between CSR and OCB, chose to focus on the role task significance plays in the relationship between the two constructs. Using three field studies, the researchers found that task significance interacted with CSR to predict OCB. That is, among those employees who reported higher task significance the relationship between CSR and OCB was more positive. On the back of these findings the researchers argued that there are implications for the manner in which jobs and CSR should be designed if the intention is to effectively harness OCB.

Another piece of research conducted using a sample of 154 participants found that CSR implementation had a significant effect on OCB (Abdullah & Rashid, 2012). In the last example provided here, a study focused on the impact of perceived CSR on OCB among pharmacists. The researchers, Khaleel, Chelliah, Rauf and Jamil (2017), found that CSR predicted OCB as well as affective organisational commitment. They found that the relationship between CSR and OCB was fully mediated by affective organisational commitment and concluded that commitment to the organisation as well as OCB can both be enhanced by CSR activities.

The studies mentioned above, while focused on the relationship OCB has in the context of CSR, provide some useful insights regarding the potential relationship between OCB and CSE and align to observations regarding the general positive impact of genuine social capital and its impact on employee behaviour (Bolino, Turnley & Bloodgood, 2002). Unsurprisingly no research on OCB and corporate entrepreneurship could be found. There was one study, however, that tried to understand the role of corporate entrepreneurship on OCB in the context of CSR (Luu, 2017). That is, the study attempted to understand how much of a moderating effect corporate entrepreneurship had on the relationship between CSR and OCB. The results of the study revealed that CSR has a positive effect on OCB. They also revealed that corporate entrepreneurship played a moderating effect between CSR and OCB.

The nature of OCB makes it a highly desirable trait that organisations would want to foster in as many employees as possible. The research on this construct's relationship with both corporate entrepreneurship and CSR seems to suggest a largely positive relationship with both. This, in turn, would seem to suggest that a positive relationship with CSE is possible and the current study will test that possibility. The concept of job satisfaction, which is the third and final organisational effectiveness construct the current study is interested in understanding in relation to CSE will now be discussed.

### 5.4 Job Satisfaction

Job satisfaction is a construct that has been central to the field of organisational psychology for some time and which has therefore been examined comprehensively empirically and theoretically (Dormann & Zapf, 2001; Fahr, 2011; Sen, 2008). The construct relates to the extent to which a person is satisfied with the actual work that they do (not necessarily the organisation that they perform the work in) and it has therefore largely been studied in the context of work motivation theories (e.g. Hackman and Oldham) (Dormann & Zapf, 2001). Because of its nature, Dormann and Zapf (2001) state that job satisfaction has been a popular unit of analysis when outcome variables like organisational inefficiency (i.e. counterproductive behaviour) as well as absenteeism are being studied.

The general interest in job satisfaction has stemmed from the need researchers have to understand how to make a job more meaningful and therefore more satisfying (Sen, 2008). Given the construct's importance in the field of organisational psychology, when investigating constructs that have not been examined before, in this case CSE, it is important to understand the influence they may have on job satisfaction. Understanding the impact CSE may have on job satisfaction is important because of the implications it may have for organisational efficiencies at an employee level (e.g. inferences about productivity levels, motivation and a desire to be at work). There is both academic and practical value in exploring job satisfaction in the context of CSE and the current study sees an opportunity to understand a well-established and researched construct further in a different context. It is now worth assessing the research conducted on job satisfaction and constructs like corporate entrepreneurship and CSR to derive an understanding of how the construct might interact with CSE.

In terms of research focused on job satisfaction and corporate entrepreneurship, there does not seem to be a great deal of work that has been done. In one of the few studies conducted on the subject Kuratko, Hornsby and Bishop (2005) sought to understand the relationship between managers' corporate entrepreneurial actions and job satisfaction. Specifically, the researchers formulated three hypothesises; 1) that perceptions of a corporate entrepreneurial environment will be positively related to job satisfaction and that 2); job satisfaction will mediate the relationships between perceptions of a corporate entrepreneurial environment and actions; 3) job satisfaction will be positively related to various corporate entrepreneurship outcomes (e.g. actions, new ideas and implemented improvements). The findings led the

researchers to conclude that positive relations exist between job satisfaction and perceptions of a corporate entrepreneurial environment as well as corporate entrepreneurship outcomes. They also indicated that job satisfaction mediates the relationship between the corporate entrepreneurial environment and actions.

In their research focused on the antecedents of corporate entrepreneurship, van Wyk and Adonisi (2012) found that positive and significant correlations existed between extrinsic job satisfaction and the constructs of work discretion, rewards and innovative initiatives. They also found that intrinsic job satisfaction showed significant and positive correlations with rewards and work discretion from a corporate entrepreneurship dimension perspective. Antoncic and Antoncic (2011) assessed how employee satisfaction interacts with the notion of intrapreneurship and growth. They found that there is a positive and significant relationship between employee satisfaction and intrapreneurship as well as growth from an organisation perspective. Similarly to this result, Akehurst, Comeche and Galindo (2009) found that job satisfaction has a direct and positive relationship with internal entrepreneurial activities along with organisational commitment.

There seems to be a good amount of literature relating to CSR and job satisfaction. iFor instance, Raihan and Karim (2017), studying how CSR and job satisfaction interact among employees in multinational companies in Bangladesh, found that there was a significant and positive relationship between job satisfaction and most components of CSR (i.e. the philanthropic, ethical and legal dimensions). The researchers noted the negative relationship which existed between job satisfaction and the economic component of CSR that formed part of their conceptualisation of the construct. Seemingly, the social and morally salient aspects of CSR resonate in a positive way with employees and how satisfied they are with their jobs whereas the idea of CSR as an economic enabler seems to diminish that interaction.

Another study focused on the manner in which CSR, organisational justice and job satisfaction interrelate found that a clear positive relationship between CSR and both organisational justice and job satisfaction exists (Tziner, Oren, Bar & Kadosh, 2011). Additionally, the relationship between CSR and job satisfaction was mediated by organisational justice. Story and Castanheira (2019) analysed the relationship between CSR and employee performance. In their study the researchers considered job satisfaction as a potential mediator between the two constructs along with affective commitment. The results of the study indicated that job satisfaction partially mediated the relationship between

external CSR and employee performance whilst there was no evidence of affective commitment playing any meaningful mediating role.

In a study focused on how CSR, leadership characteristics and job satisfaction interact, Vlachos, Panagopoulos and Rapp (2013) found that employees who perceived their leaders as charismatic showed more positive signs of job satisfaction in the context of CSR. This is an interesting finding in the context of the current study as great emphasis is placed on leadership in the concept of CSE. Valentine and Fleischman (2008) sought to understand the relations between ethics programmes, CSR and job satisfaction. Their findings indicated that CSR was a mediator of the relationship between certain ethics programmes and job satisfaction. In this instance, because the focus of the study was on establishing how to better inculcate ethical behaviours within the organisational context, the researchers used CSR as a proxy for an ethical organisation and proposed that ethics programmes, aided by visible CSR, would lead to greater job satisfaction. Their findings supported their hypothesis.

There is, of course, more research that covers the topic of how these two constructs interact with each other. However, the research discussed to this point provides a clear enough indication that CSR and job satisfaction correlate positively. Based on this, as well as the findings on job satisfaction in relation to corporate entrepreneurship, it seems possible that CSE and job satisfaction will also be positively and significantly correlated.

### 5.5 Social consciousness as a driver of meaningful work

The research discussed in relation to the three organisational effectiveness constructs forms an important part of this study. It demonstrates how organisations that have a clear and significant interest in positively impacting the lives of their communities and organisational members, through socially conscious activities can, as a result of that focus, give their employees an opportunity to find a greater sense of meaning in the workplace.

The fact that evidence would suggest employee engagement, organisational citizenship behaviour and job satisfaction seem to show largely positive interactions with constructs such as CSR and corporate entrepreneurship is encouraging. It is encouraging because CSE incorporates aspects of both these constructs which would imply, as suggested before, that there will likely be positive relationships between CSE and the various constructs.

Given the basic nature of the organisational effectiveness constructs (i.e. some being more of an outcome variable than others) the current study's intention is to not only understand how

they interact with CSE individually but also try establish a model that best explains the way these variables interact and are influenced by CSE.

### 5.6 Research gap

Given its potential significance in positively influencing the way organisations operate, Spitzeck, Boechat and Lea˜o (2013) have lamented the lack of empirical research on CSE. They highlight the fact that Corporate Entrepreneurship has been given significant attention when the seemingly more favourable and novel notion of CSE holds greater promise in providing important insights for organisations that aim to focus and optimise CSR.

Even at this early stage of CSE's theoretical and empirical development its exploration has been on a fairly macro-business level that focuses on conceptualising the business model that needs to be utilised to make CSE a reality (Spitzeck, Boechat & Lea˜o, 2013). It has been the subject of study primarily for business schools looking to understand the key operational components required for CSE to be successfully realised and the consequences of not adhering to these (e.g. competitive advantage levers like collaborations and strategic investments). The main mode of investigation used to understand the key components for successful CSE has been the case study approach.

Austin and Reficco (2009) developed their interpretation of CSE following two in-depth case studies. These case studies took place in organisations considered as pioneers of CSE by the researchers (i.e. Starbucks Coffee and The Timberland Company). Spitzeck, Boechat and Lea˜o, (2013) also used a case study approach for their investigation of CSE. Spitzeck et al (2013) conducted two in-depth case studies of projects pursued by the Odebrecht group in Brazil to help them build a model that would reconcile external non-market triggers and innovations to CSE. Their work had the clear aim of presenting a model of CSE that could enable innovation for sustainability. This is a model that is now adopted, to varying extents, by numerous organisations across the world looking for a greater competitive edge (Zadek, 2005). There is not much else that has been done as far as empirical research in this field is concerned. Indeed, pertaining to the impact of CSE on internal organisational functioning, no research could be found.

In the theoretical sense, Austin, Stevenson and Wei-Skillern (2006) are among some of the few authors who have advocated for clearer theoretical discourse in the area of CSE. Two of the conceptual elements underpinning CSE, namely social entrepreneurship and corporate

entrepreneurship, have significantly more literature and, in the case of corporate entrepreneurship in particular, a fairly substantial body of empirical work that has focused on both its internal and external organisational impact has been developed over time (Adonisi, 2003). Corporate social entrepreneurship is effectively still in its embryonic form, at least in the empirical sense. Its developmental state, as well as the heavily 'business model' oriented approach existing research has taken when engaging the topic, means there has been a lack of research from an internal organisational perspective.

Thus, there is a gap in the literature as there is a distinct absence of research focused on finding a way to effectively measure CSE and understand its impacts on employees. Through the development of a reliable and valid CSE scale based on the work of Austin and Reficco (2009) and investigating the impact of CSE on the three organisational effectiveness constructs central to the research, the current study will aim to address that gap.

### 5.7 Aim of the study

The current study consists of two distinct aims that will be dealt with in two research phases. The study's initial aim is to develop and test a CSE scale. The second aim of the study is to assess the relationship between CSE, employee engagement, organisational citizenship behaviour and job satisfaction.

### 5.8 Rationale

Corporate social entrepreneurship has been researched from a business model perspective that attempts to understand the constituent components involved in realising it. No research could be found that focused on validating the conceptual framework developed by Austin and Reficco (2000) through the development of a measurement instrument for CSE. Therefore, the current study wishes to develop and validate a CSE scale to facilitate the effective measurement of CSE in the organisational context. The other gap that exists is that CSE has not been researched from the perspective of the employee. That is, no research, qualitative or quantitative, could be found investigating how CSE is experienced by organisational members as well as its impact on organisational them from on organisational psychology perspective. The current study addresses this by focusing on the impact CSE has on salient employee-centred constructs so its impact on internal organisational functioning can begin to be understood. Therefore, the current study also investigates the impact CSE has on internal

organisational functioning through understanding its interactions with employee engagement, organisational citizenship behaviour and job satisfaction.

### 5.9 Research questions and hypotheses

**Phase 1**

**1.** Does the CSE scale demonstrate satisfactory content validity?

**2.** Does the CSE scale demonstrate satisfactory internal consistency?

**3.** What is the most sensible factor structure for the corporate social entrepreneurship construct?

**Phase 2**

**4.** *Hypothesis 1:* There is a positive relationship between CSE and employee engagement

**5.** *Hypothesis 2:* There is a positive relationship between CSE and OCB?

**6.** *Hypothesis 3:* There is a positive relationship between CSE and job satisfaction

**7.** Does CSE significantly predict any of the organisational effectiveness variables

**8.** Can structural equation modelling optimally explain the way the organisational effectiveness variables are influenced by CSE?

# CHAPTER 6: METHODS

## 6.1 Chapter introduction

This chapter of the thesis sets out to outline the research methodology that was used to address the research questions proposed in phases one and two of the study. To that end, the research design employed in each of the phases will be described. To be clear, the first phase of the study sought to develop a statistically reliable and valid measure for CSE. The second phase then sought to understand the impact of CSE on the organisational effectiveness variables. The samples and sampling strategies applied for the respective phases will be explained along with the procedures that were followed to obtain the study's data. The measures used will also be described along with the statistical techniques utilised to analyse the data and address the research questions and hypotheses. To conclude, ethical considerations pertaining to the study will be discussed, bringing a close to the methods chapter.

## 6.2 Research design

*Phase one*

Phase one of the research aimed to develop a statistically reliable and valid CSE scale. The research design used for the first phase of the study was a cross-sectional, quantitative design. The data for this phase of the study was gathered at one point in time and no causal relationships could be explored because of the nature of the design. This phase saw data being gathered using a survey technique (Kerlinger & Lee, 2000).

*Phase two*

Phase two of the research aimed to understand the impact of CSE on the three organisational effectiveness constructs. The research design applied during the second phase of the study was identical to that of the first phase. It was also a cross-sectional, and quantitative design. As the study was correlational, no causal relationships were or could be assessed. A survey approach was again used for the second phase of the study. The survey research approach has been consistently shown to be an effective tool for gathering information regarding peoples' attitudes, beliefs and behaviours in the field of psychology so it was deemed the most optimal approach given the very specific aims of the study (Kerlinger & Lee, 2000).

### 6.3 Sample and sampling strategy for phase one

As a point of reference for ensuring a reasonable sample size for the purpose of achieving the outcomes of the first phase, the study drew on the work of Hinkin (1995) where it was argued that a minimum sample size of 150 participants would be required for meaningful scale development in the organisational science context. A purposive, non-probability sampling strategy was utilised to ensure the achievement of the correct sample characteristics for the study's objectives. That is, this strategy was employed to ensure that participants in the study were people who worked for organisations with sustainable development programmes in order to allow them to engage sensibly and meaningfully with the CSE scale.

To that end, a purposive sample of 156 participants working in various industries (e.g. financial services, manufacturing and engineering) was achieved for the first phase. While more participants would have been ideal, the difficulties associated with getting organisations and individuals to engage in research were experienced over a sometimes disheartening period of over a year of data collection. Nevertheless, given the achieved sample size, the minimum requirements proposed by Hinkin (1995) and corroborated by other researchers (Kerlinger & Lee, 2000) were at least met and provided an acceptable base from which to move forward.

In terms of specific sample characteristics, the sample for phase one consisted of *21% male* participants and *79% female* participants. The sample had a mean age of *32.59* with a standard deviation of *6.73* and an age range of between 20 and 53. A relatively high proportion of the participants held professional diplomas (35%) and undergraduate degrees (33%) while some participants (18%) indicated that they held a matric certificate (i.e. high school diploma) as their highest form of qualification. Similarly, a relatively small number of research participants held a post-graduate qualification (14%).

### 6.4 Procedure

The procedures that were followed for the two phases of the study will now be detailed. To that end, an overview of each phase of the research followed by the specific steps that were taken in phases one and two are now provided.

#### 6.4.1 Phase one: Scale development overview

The process of developing the CSE scale began with an item generation exercise. This was followed by a content validity exercise where 8 subject matter experts were asked to provide

feedback on the CSE scale items. Feedback received from each of the subject matter experts was then incorporated, with the goal of refining the CSE scale further from a content validity perspective. Once the CSE scale had been refined satisfactorily, it was administered to 200 part-time students who had full time jobs in organisations with sustainable development programmes. Following the collection of all the questionnaires responses were captured on a spreadsheet and export the raw data into R to conduct statistical analyses that would assist in determining the extent to which the CSE scale demonstrated sound statistical properties. The specific statistical techniques used to determine whether the CSE scale was statistically coherent were exploratory and confirmatory factor analyses and Cronbach alpha tests. The two forms of factor analysis conducted (i.e. exploratory and confirmatory) provided statistical clarity on the construct validity of the CSE scale. The Cronbach alpha tests assisted in establishing the level of internal consistency present in the CSE scale as well as general reliability with regards to the instrument. A detailed description of each of the steps outlined above is now be provided.

### 6.4.2 Item generation

To facilitate the process of item generation for the CSE scale a strong emphasis was placed on three of the elements outlined by Austin and Reficco (2009) that were deemed appropriate from an organisational behaviour perspective (i.e. enabling environment, fostering CSIntrapreneurs and amplifying corporate values). These three elements formed the conceptual framework that guided the scale construction process.

The process began with the generation of items for the element termed *enabling environment.* Items pertaining to the extent to which employees experienced the below outlined constituent properties of this element in their organisations, were constructed:

- leadership support for triple-bottom-line (TBL) performance
- Incentives and rewards that are linked to TBL being infused into their own jobs and the organisation as a whole
- Inter-departmental and inter-organisational collaboration for the purpose of finding and/or improving the organisation's social and environmental impact

Using these three salient characteristics of the element concerned with an enabling environment 23 items were generated. Of the 23 items, "leadership support" accounted for

seven items, while “incentives and rewards” accounted for six and “inter” (5) and “intra” (5) departmental collaboration together accounted for the remaining ten.

The second element used for scale item generation was *fostering CSIntrapreneurs.* Items pertaining to the extent to which employees experienced the below outlined constituent properties of this element in their organisations, were constructed:

- Visibility of individuals specifically dedicated to driving high social and environmental performance
- Employees’ knowledge of individuals specifically dedicated to driving high social and environmental performance
- Active involvement of CSIntrapreneurs in helping different departments innovate for social and environmental performance

For the CSIntrapreneur element eleven scale items were generated. Of the eleven items, four accounted for “visibility”, four accounted for “knowledge” and three accounted for the “active involvement”.

The last element used for scale item generation was *amplifying corporate purpose and values.* To that end, items pertaining to the extent to which employees experienced the below outlined constituent properties of the element in their organisations, were constructed:

- Economic, environmental and social prosperity stated explicitly as central values for the organisation
- A mission statement that clearly indicates a focus on social and environmental performance

Four items were generated for *mission statement* and five items for the *values.* So during the item generation process generated 43 scale items. In table 1 below a summary of the results of the item generation process are provided.

**Table 1: Item generation summary by CSE element**

| CSE element | Constituent properties (no. of constructed items) | Total scale items |
|---|---|---|
| **Enabling environment** | a) Leadership support (7)<br>b) Incentives and rewards (6)<br>c) Inter-organisation collaboration (5)<br>d) Intra-departmental collaboration (5) | Twenty-three (23) |
| **CSIntrapreneurs** | e) Knowledge (4)<br>f) Visibility (4)<br>g) Active participation (3) | Eleven (11) |
| **Corporate purpose** | h) Values (5)<br>i) Mission statement (4) | Nine (9) |
| **Total** | | **Forty-three (43)** |

A five-point Likert-type scale response format was applied to reflect the fact that the CSE scale was attempting to assess the *degree* to which certain phenomenon are experienced by organisational members (Hinkin, 1995; Rosenthal & Rosnow, 2008). This format was chosen after considering whether it would be appropriate to use a forced choice response format for some of the scale items (e.g. the mission statement items). After due consideration, taking into account the nature of the constructs, the forced choice response format (i.e. yes or no type responses) was ruled out for the CSE scale. This meant the five-point response format approach was used. However, there was the addition of a forced choice response item to the biographical questionnaire as a method of augmenting the scale. The item asked participants to confirm whether or not they knew their company's mission statement.

### 6.4.3 Content validity

The pool of 43 items developed during the process outlined in the previous section was then presented to eight subject matter experts for their input and critique. The subject matter experts consisted of three university professors of international standing who, between them, had strong expertise and focused their research efforts on the fields of organisation behaviour, sustainable development, social and corporate entrepreneurship, and corporate social responsibility. To ensure the feedback received was not biased toward academia two of the subject matter experts chosen were in management consulting working in a multinational

management consulting firm. One of the consultants held an Associate Director role in the firm in question while the other expert held a Senior Manager role in the same firm. Between them, their areas of expertise were corporate social value development, organisational culture, operating model and organisation design, and change management. Of course, for the purpose of the current study, it was their expertise in corporate social value creation and organisational behaviour in which was of interest. One of the other participating subject matter experts was an entrepreneur well versed and competent in the areas of organisation behaviour, corporate and social entrepreneurship, psychological assessments and organisation design. The seventh subject matter expert who participated in the validation exercise held a senior organisational development position in a large multinational corporation and specialised in the field of organisational behaviour. The eighth subject matter expert held a senior managerial role for a large multinational company where the focus of their portfolio was squarely in the areas of corporate social responsibility and social entrepreneurship.

**Table 2: Demographic description of subject matter experts**

| Subject matter expert professional designation | Area of expertise |
|---|---|
| Full Professor – University Business School | Entrepreneurship; Corporate entrepreneurship; Organisational behaviour; Leadership development |
| Manager – Organisation Development | Organisational behaviour |
| Associate Professor – Organisational Psychology | Social entrepreneurship; Organisational behaviour; Organisational culture; Psychological assessments |
| Manager – Corporate Affairs | Corporate social responsibility; Stakeholder relations management |
| Full Professor – Organisational Psychology | Sustainable development; Corporate social responsibility; Organisational behaviour; Psychological assessments |
| Associate Director – Management Consulting | Corporate social value; Organisational behaviour; Organisational culture and |
| Entrepreneur – Private Consulting and not-for-profit work | Entrepreneurship; Social entrepreneurship; Organisational behaviour; Change management |

| | |
|---|---|
| Senior Manager – Management Consulting | Operating model design; Organisation design; Organisational behaviour |

The subject matter experts were invited to participate by email and were electronically briefed through the use of a participant information sheet (see Appendix 3). The participant sheet contained information that explained both the purpose and significance of the content validity exercise as well as what participation would entail. The broader aims of the research were also briefly outlined on the information sheet. All of the ethical requirements for conducting field work were adhered to throughout this process (see *ethical considerations* section for full details). The specific feedback of each subject matter expert (herein randomly referred to as participant 1, 2, 3 etc.) regarding the content validity of the CSE scale will now be provided and a summary of the feedback will also be given in tabulated form.

**Participant 1 feedback:** This subject matter expert had two general comments. The first comment was around the repetitive nature of a number of the CSE scale items. Specifically, of the 43 scale items the subject matter expert argued that 20 were possibly repeat items. The second comment made by the subject matter expert concerned the possible addition of two items. The researcher was asked to consider adding items that aimed to measure the extent to which there was a clear belief by participants that company performance increased in the long term because of a positive environmental and social impact.

**Participant 2 feedback:** This subject matter expert made a useful comment about the manner in which the scale was structured and how it might benefit from a simpler approach to presenting the items. The subject matter expert pointed out that instead of repeating items and simply changing the central construct (e.g. environmental impact or social performance) it may make it easier for participants to complete the questionnaire if the statement pertaining to a particular element of CSE is stated first (e.g. My organisation provides incentives for innovative ideas that improve) and the central concepts linked to CSE (e.g. social value or environmental performance) are then presented for participants to consider in relation to the element.

That would mean instead of presenting the item “my organisation rewards innovative ideas that lead to positive social performance” and then presenting again the same item with the minor change of inserting “positive environmental impact” instead, perhaps the statement should be provided as an umbrella statement and the various concepts being measured should

be listed after for participants to rate. The subject matter expert also suggested specific wording modifications to four of the forty-three items and pointed out that the items pertaining to "mission statement" should initially be forced choice and then, depending on the answer, measured using the scale's five-point Likert approach.

**Participant 3 feedback:** This subject matter expert had specific wording suggestions pertaining to three the scale items. She also raised concerns about the seemingly repetitive nature of two scale items in particular. The subject matter expert also made some formatting suggestions (e.g. use bold for central concepts being measured) to help eliminate any confusion around items that may otherwise be viewed as identical by people completing the scale.

**Participant 4 feedback:** Recommendations made on the scale by this subject matter expert were specifically focused on the changing of wording for three of the scale items. The subject matter expert also highlighted a concern about the lack of representation in the scale of items that focused on the double return element of the CSE construct. This was a valid point which confirmed achievement of the goal of constructing a scale that focused on three of the elements which were considered pertinent to organisation behaviour (see section on *interpretation of the CSE elements* for a comprehensive explanation). The subject matter expert also questioned the value of the mission statement as a substantial component of the CSE construct and criticised it as being too theoretical nature. The participant made it clear that this was a direct criticism of the general construct and not the scale.

**Participant 5 feedback:** This subject matter expert slightly misunderstood the requirements of the exercise and ended up actually completing the scale in a qualitative manner. That is, the subject matter expert provided sentence responses to each of the items in respect to how they felt their own organisation. By completing the scale in this manner, however, the subject matter expert indirectly suggested that eighteen of the items were potentially repeat items that were unnecessary. As a result, their feedback was considered useful and useable.

**Participant 6 feedback:** This subject matter expert made four general comments. The first pertained to the need to be consistent in formatting style (i.e. if key words in the scale items are going to be underlined then this should be the case throughout the scale). The second comment was about how the wording of eleven of the scale items could be improved. The third comment was about how useful it would have been to have a simplified matrix of the CSE construct to make completing the exercise slightly easier. Finally, the subject matter

expert questioned the length of the scale and suggested that it did not need to be as long as it was.

**Participant 7 feedback:** This subject matter expert made comments about possible improvements to the wording of seven of the items and suggested that at least three of the items seemed repetitive. The expert was divided in terms of whether they could judge more of the items as being repetitive because they felt that even though the proximity of meaning across a number of items was close, there was still enough variation to technically merit viewing them as stand-alone items. The expert therefore opted to highlight what they felt were blatant repeat items.

**Participant 8 feedback:** Unfortunately, the feedback from this subject matter expert was not usable because the individual misunderstood the requirements of the task. Where commentary was required on how the scale could be improved based on their professional expertise and knowledge, instead the participant believed they were required to complete the scale and send it back for analysis. There was, however, sufficient feedback which resulted in core subject matter expert themes being captured regarding scale improvements. This meant that the process was able to move forward in spite of this participants misunderstanding of the task.

### 6.4.4 Conclusion and summary of subject matter expert feedback

The general feedback from the subject matter experts regarding the scale highlighted three broad themes. The most prevalent comment was about the length of the scale and the need to reduce the 43 items if possible. In this regard a number of the subject matter experts highlighted specific items that they felt were repetitive and implored the researcher to consider eliminating them. The second comment common amongst most of the subject matter experts was that of making the scale a little easier to work through. Suggestions to improve the usability of the scale ranged from basic formatting (e.g. underlining or making key text bold) to a complete rethink of the layout of the scale items (see feedback from participant 2 for details). The third comment consistent across most participants was about wording certain items slightly differently.

There were also isolated suggestions for improving the scale. The first participant for instance, suggested that two more items should be added. The second participant also made the recommendation that the “mission” items should be preceded by a forced choice item that

would determine whether respondents could move on to complete the "mission" items on the scale. The fourth participant made a comment about the absence of item representation for "double return" in the scale and also felt the "mission" component of corporate social entrepreneurship was possibly too theoretical (the participant made it clear that this was not necessarily a criticism of the scale).

All of the feedback was considered – both broad themes and individual or isolated comments – and refined the scale accordingly. The result was a CSE scale that consisted of 33 items (see Appendices 8 and 9 for draft and final scale). Following this initial process of rigorous scale refinement the scale was administered to part-time students working for organisations with sustainable development programmes.

### 6.4.5 Preparation and scale administration

Following the rigorous qualitative process undertaken and the process of refining the scale based on feedback received from the identified subject matter experts, the scale was ready for deployment. To commence the data collection process permission was sought from a number of lecturers at the University of the Witwatersrand for access to their part-time classes to request the part-time students who met the criteria for participation to partake in completing the questionnaire.

Most lecturers were prepared to allow the researcher to engage their classes for a short period either at the beginning of the lecture or towards the end of their seminar. Where permission to engage a class was granted by the lecturers, the researcher went into those classes, gave a quick overview of the study as well as the participation criteria. It was also explained that participation in the study was voluntary and that participants could withdraw from the study at any point without prejudice.

The researcher explained that participation required willing participants to complete the demographic questionnaire and CSE questionnaire, which were made available in physical copy. Anonymity and confidentiality were assured. In some cases, students were willing to participate but not keen on completing the physical questionnaire there and then. In those instances, and with the full consent of those participants, the questionnaires were made available via email so they could complete them electronically when they were ready. The potential participants who were comfortable with that option provided their email addresses and questionnaires were sent to them. Anonymity was not possible for participants who chose

the email option, but assurances pertaining to confidentiality were made by the researcher and these were acceptable to those participants.

### 6.5 Phase one measures

In this section, the scales used for the first phase of the study will described below.

#### 6.5.1 Biographical Questionnaire

The biographical questionnaire assessed gender, age, race, occupation, job type, education, industry and job tenure. This questionnaire also contained an item relating to whether or not participants knew the mission statement of their respective organisations in order to cross reference this outcome with the answers given to the mission statement items in the CSE scale if necessary. Understanding the demographic characteristics of any sample is always beneficial, as it provides context to the obtained results and may enable a more effective interpretation of them.

#### 6.5.2 Corporate Social Entrepreneurship Scale

The CSE scale was developed through a rigorous qualitative process aimed at refining and making it as precise as possible. The scale has a total of 33 items and was ready for statistical testing to assess whether it was statistically reliable and had good construct validity.

### 6.6 Phase one analysis

In this section various statistical techniques used to validate the CSE scale and make sense of the biographical data are discussed.

#### 6.6.1 Exploratory Factor Analysis

Exploratory factor analysis was used to gain an initial impression of how the CSE scale items loaded with no real constraints applied and what that meant in terms of the most sensible factor structure for the scale. This initial step, made self-evident by the name of the technique, was indeed the start of a process to help determine the scales construct validity. In order to do so a number of steps were followed (Kerlinger & Lee, 2000).

A practical lens was applied to conduct the exploratory factor analysis. That is, while all the important guidelines and criteria to get an initial sense of the optimal number of factors to retain were applied (e.g. the consideration of factors with eigenvalues greater than one and the output of the scree plot) *a priori* theory was the biggest influencer of how the analysis results were understood (Kerlinger & Lee, 2000). The oblique technique was also used for

factor rotation because it was assumed (and confirmed) that the CSE constructs are sufficiently correlated to one another for this rotation technique to be applicable. The standard threshold for interpreting and determining factor loadings was set slightly higher than the generally applied 0.40 threshold at 0.50 and applied thus for greater rigour.

### 6.6.2 Confirmatory Factor Analysis

The next step of the analysis, which assisted in determining the optimal construct validity of the CSE scale following on from the exploratory factor analysis, was the application of confirmatory factor analysis (CFA). This method enabled further refinement of the CSE scale by testing it under statistical parameters firmly guided by theory-driven assumptions. In this regard, analytical autonomy was exercised by the research in the sense that the scale was tested and evaluated for appropriate model fit under factor loading conditions that were believed to make sense from a theoretical perspective. This second important step helped ensure that the CSE scale was optimally refined and validated for use in the second phase of the study. Of course, it is important not to forget that the possibility of an outcome in this analysis suggesting the scale was incoherent and therefore unviable, could have also been reached. This would have had some quite problematic implications for how the study moved forward and was an inherent risk of the somewhat ambitious nature of the research.

### 6.6.3 Reliability analysis

Internal consistency for the CSE scale was determined by employing Cronbach's alpha coefficient method. Doing this entailed evaluating the psychometric properties of the CSE scale as well as its subscales to ensure that there was strong evidence of internal consistency (i.e. Cronbach alpha coefficients of at least 0.70). As a method of ensuring good rigour in with regards to scale reliability, a second measure of reliability was also evaluated for CSE. Specifically, Guttman Lambda 6 (G6) was assessed to allow for an effective cross-validation of the outputs of the Cronbach alpha coefficients.

Cross-validation is not a common nor necessary procedural step in assessing scale reliability in most research. Indeed, some might argue it is redundant to do this even though the underlying mathematical operations for the two techniques differ in a number of ways and result in some comparatively variable outcomes depending on the nature of the items being assessed. Cronbach alpha is considered credible and sufficient on its own in most circles, even with its well documented shortcomings (Huck, 2004). All of this was understood and the alternative reliability assessment technique (G6) was used to have an additional point of

reference for understanding the Cronbach alpha coefficients for the scale and to get a clear view of where the 'truth' might be in the context of the results obtained.

### 6.6.4 Descriptive Statistics

Descriptive statistical techniques including frequencies, modes, means and medians were assessed for both the biographical data as well as the CSE scale. In the context of determining the statistically viability of the CSE scale, the descriptive statistics were useful in so far as understanding the general nature of the data (e.g. skewness and kurtosis). The biographical questionnaire was a source of enhancing data richness but in truth, played little role in the process of testing whether a reliable and valid instrument, based on the data set collected, had indeed been constructed.

## 6.7 Phase two

### 6.7.1 Phase two sample and sampling strategy

A sample of at least 150 participants was targeted for the second phase of the study to enable meaningful structural equation modelling analyses to be conducted (Bentler & Chou, 1987). Achieving that sample size would also enable other statistical analyses the study aimed to perform to be conducted meaningfully.

The sampling strategy proposed for phase two, similar to phase one, was a non-probability purposive sampling technique. Purposive sampling was used because participants were drawn specifically from those organisations with sustainable development programmes as the study used this as a key indicator of a reasonable presence of CSE (Rosenthal & Rosnow, 2008). In empirical research of an exploratory nature such as the current study, non-probability samples have been found to be very effective (Kerlinger & Lee, 2000).

Following the conclusion of the data collection process and after coding the data for analysis on SPSS, there were 159 usable questionnaires out of a total of 232. The viable sample consisted of 59.1% male and 40.9% female participation. In terms of age, the sample demonstrated a range of 20 – 62 years with a mean of 35.38 and a standard deviation of 10.04.

The sample consisted of 76.1% African participation with 17.6% White, 4.4% Coloured and 1.9% Indian participants. This distribution is fairly well aligned with the Economically Active Participation (EAP) statistics of the South Africa as reported by Statistics South

Africa (SSA). In terms of the education profile of the sample, 47.1% of the sample had grade 12 as its highest qualification (i.e. high school diploma), 30.1% possessed a college diploma and 4.6% had an undergraduate degree. Of the sample, 14.4% indicated they had completed a postgraduate qualification and 3.9% had a grade 11 qualification or lower (i.e. did not complete grade 12 to obtain a high school diploma).

The sample had a good mix of administrators (23.7%), Technical professionals (33.3%), Specialists (5.8%), Managerial professionals (21.8%) and a mixture of young professionals completing various types of learnerships (15.4%). With regards to tenure, 14.2% of the sample had spent less than a year at their place of work, 22% had between one and two years, 11.3% had between two and five years, 24.1% between five and ten years and 28.4% had more than ten years tenure within their organisations. The industry split of the sample indicates 64.9% of participants operate in a manufacturing environment, 17.9% in engineering and construction, 9.3% in IT, 5.3% in mining and less than a percent (0.7%) in Petrochemicals. It is unfortunate that of the incomplete questionnaires a fairly high percentage came from the financial services industry. Having that data available would have meant almost all key sectors within the South African economy were represented. Nevertheless, the distribution of industry types was still reasonably good and appropriate for the aims of the study.

### 6.7.2 Procedure

A variety of methods were used to gather the required data during the second phase of the study. Having obtained the necessary ethical clearance from the University's ethics committee, a number of different organisations were approached to request permission to distribute the questionnaire pack that needed to be completed by research participants. An organisational access request letter was shared with the appropriate authorities/personnel within organisations and got reasonably positive responses (see Appendix 2).

During interactions with these organisations, and apart from explaining the purpose of the study, the researcher indicated a strong willingness to approach data collection in any way the organisations felt was most appropriate and unobtrusive within the required ethical parameters. The options proposed included physical distribution of the questionnaire from a central point and/or electronic distribution of a link to the questionnaire using the appropriate Information Systems channels in the organisations. It was explained that the link would be embedded in the participant information sheet.

Preferences varied and so too did participation levels within organisations that agreed to grant access. The majority of completed questionnaires were in the form of physical questionnaires (approx. 65%) with the rest being electronic, through completion of the questionnaires via Survey Monkey. At the conclusion of the data collection process 232 questionnaires were received. For clarity, the questionnaire 'pack' for the second phase of the study consisted of a biographical questionnaire, the CSE scale, an employee engagement scale, an organisational citizenship behaviour scale and a job satisfaction scale (full details of the respective scales can be found under the *Measures* section for phase two).

A good target sample was attained during the data collection process, but with a great level of difficulty due to organisations being reluctant to grant access. During the coding process that took place to prepare for the data analysis stage, however, it became apparent that a fairly high number of participants had not completed the questionnaires fully. This was quite disappointing but not entirely surprising given the number of questionnaires and items involved. That said, the stated minimum sample for the research was achieved. Also, given the exploratory nature of the work the study was undertaking the achieved sample was deemed sufficient.

### 6.7.3 Measures for phase two

The measures described below were used during the second phase of the study and provided the basis for the analyses that would follow.

#### 6.7.3.1 Biographical Questionnaire

The biographical questionnaire assessed gender, age, race, occupation, job type, education, industry and tenure. This questionnaire was identical to the one used in the first phase of the study and provided a good range of demographic characteristics to assess and understand.

#### 6.7.3.2 Corporate Social Entrepreneurship Scale

The CSE scale was developed and validated during phase 1 of the study. It contained seven sub-scales with good Cronbach alpha's ranging between 0.65 and 0.90. The scale has a total of 33 items and, as discussed in the phase one discussion section, showed a fairly coherent construct validity structure. The scale is, of course, in the incipient stages of its development, but demonstrated enough promise to provide the current study with the opportunity to explore its impact on the organisational effectiveness constructs.

#### 6.7.3.3 Employee Engagement Scale

An eleven item scale developed by Saks (2006) was used for measuring employee engagement. The scale has two sub-scales. One sub-scale has five items and focuses on job engagement. It has a Cronbach alpha coefficient of 0.82. The second sub-scale has six items and focuses on organisation engagement. It has a reported reliability co-efficient of 0.92. "Participants indicate their response on a five-point Likert-type scale where (1) is strongly disagree and (5) is strongly agree." (Saks, 2006, p. 608). There is one reverse item in each of the subscales but apart from that, high scores imply high employee engagement and low scores imply low employee engagement. While there is no evidence of the scale being used in the South African context, a reliability analysis was conducted during the first phase and the scale showed good reliability with an alpha coefficient of 0.85 implying it was suitable for this environment.

#### 6.7.3.4 Organisational Citizenship Behaviour Scale

A 24-item OCB scale developed by Podsakoff and Mackenzie (1994) was used to measure organisational citizenship behaviour. The OCB scale has five sub-scales measuring Altruism, Conscientiousness, Sportsmanship, Civic virtue and Courtesy. Each of the subscales, with the exception of Civic virtue (i.e. 4 items), have five items each. Cronbach alpha coefficients of 0.70 and above for the respective sub-scales were reported. Mahembe and Englebrecht (2014) confirmed that the factor structure of the scale attained a 0.94 Tucker-Lewis fit index and that all the factors loaded significantly on their intended factors. The scale has been applied in the South African context and is on a seven-point Likert-type scale where responses range from strongly disagree to strongly agree (see Appendix 11). With regards to scoring, the higher the score on each of the subscales the higher the level of organisational citizenship behaviour.

#### 6.7.3.5 Job Satisfaction Questionnaire

A popular 3 item Job Satisfaction Questionnaire was used for the second phase of the study. The scale has a reported Cronbach alpha of 0.80 in the South African context and provided a reliable and simple mechanism of assessing job satisfaction (Smidt, de Beer, Brink & Leiter, 2016). There was some concern about the length of the scales and demographic questionnaire and what that could mean for the desirability to participate and finish completing the questionnaires. So, a concise, reliable scale for job satisfaction was helpful from that perspective as it did not add too heavily to the load.

### 6.7.4 Analysis

This section provides a concise description of the individual analysis techniques used to address each of the phase two research hypotheses and questions posed. These techniques provide the essential base required for making sense of the data in a meaningful way.

#### 6.7.4.1 Reliability analysis

Internal consistency for the CSE scale was determined by employing Cronbach's alpha coefficient method. Similar to the first phase, and for largely the same reasons, Guttman's Lambda (G6) was also used as an estimate of scale reliability to cross-validate the results of the Cronbach alpha coefficient. Scale assessment entailed evaluating the CSE scale as well as its subscales to ensure that there was clear evidence of good scale reliability (i.e. Cronbach alpha coefficients of at least 0.70).

#### 6.7.4.2 Descriptive Statistics

Descriptive statistical techniques including histograms, frequencies, modes, means and medians were used to assess the biographical data as well as the CSE. Differences in biographical characteristics against different CSE elements could also be tested if appropriate.

#### 6.7.4.3 Correlation Analysis

Depending on whether the data was normally distributed or not, the appropriate correlation technique was employed (i.e. Pearson's correlation coefficient for parametric and Spearman's rank for non-parametric) to assess the nature of the relationships seen in the research hypotheses and questions section.

#### 6.7.4.4 Multiple Linear Regression

This analysis was conducted at the sub-scale level of the broader research questions to further understand the relationships between CSE's respective subscales and the organisational effectiveness variables. The extent to which the various sub-scales of CSE 'predicted' the different organisational effectiveness variables was the primary focus here.

#### 6.7.4.5 Structural Equation Modelling

In order to get a deeper understanding of the nature of potential causal interactions between the various factors of CSE and the organisational effectiveness variables, Structural Equation Modelling (SEM) was used. Structural equation modelling enabled the most optimal model(s)

pertaining to CSE, employee engagement, OCB and job satisfaction to be determined through the use of path analysis.

### 6.8 Ethical considerations

Ethical issues for phase 1 of the study were primarily for aspects concerning anonymity, confidentiality, voluntary participation and informed consent. The subject matter experts who chose to voluntarily participate were assured of confidentiality. They were also made aware that they were free to withdraw from participating at any stage of the study up until they submitted their feedback on the scale. The subject matter experts were provided with a detailed participant information sheet that introduced the researcher, outlined the purpose of the research and conditions for participation, and also provided the researcher's contact details.

With regard to the organisations and employees participating in the first phase, a number of things needed to be considered. First, formal access to conduct the study in the relevant entity was gained through the use of an organisation access request letter (see Appendix 1) and a follow up discussion where necessary. Decisions pertaining to the mode of scale administration were discussed and agreed with each individual entity.

Where a paper based approach was preferred, a number of CSE scales available for completion. Participants that chose to voluntarily participate were asked to place their completed questionnaires in a box placed in a secure and accessible area of the relevant building.

The scale was accompanied by a participant information sheet (see Appendix 5) that introduced the researcher and outlined the purpose of the study. The participant information sheet explained the researcher's commitment to ensuring participant anonymity and confidentiality as well. Potential participants were also made aware that completing the scale would be considered as informed consent. Conditions of withdrawal from participating and the fact that there were no known advantages or disadvantages in participating were also outlined in the participant information sheet.

Contact details were made available on the participant information sheet. The information sheet also informed participants that an electronic version of the aggregated data would be securely held for some time after the study was completed. An executive summary of phase 1 would be made available shortly after the completion of phase 1 upon request.

An identical electronic version of the scale and participant information sheet was provided where participants requested this. Instead of a physical questionnaire. In most instances the request was for the researcher to share an electronic copy of the scale via email. Participants willingly shared their email addresses and were assured their response would be kept confidential.

This was done with the understanding that email addresses would not be used after sending the questionnaire and responses would be deleted after a period of time once the study was concluded. Participants who used completed the physical questionnaire were informed that their submitted scales would not be traceable and that their anonymity was therefore guaranteed. The electronic participant information sheet would also have all the same information outlined in the physical participant information sheet (e.g. submission as informed consent, withdrawal at any stage and no advantage or disadvantage to participation).

Similar to the second part of the first phase, formal access into organisations was sought through the use of an access letter and conditions of access were agreed with those organisations that chose to participate in the second phase of the study. An identical process to part two of phase 1 was used where paper based and electronic administration is concerned. The participant information sheet differed slightly from the one used in the second part of phase 1. That is, instead of informing participants that they would complete only the CSE scale, participants were instead informed that they would be required to complete four other questionnaires as well. This would affect the anticipated participation time but apart from that, the participation information sheet contained the same information.

In general, the research was not deemed to be ethically sensitive therefore no adverse psychological effects were anticipated and indeed, none have been reported to date. However, should anything untoward emerge, the researcher's contact details were provided so that any participant queries or concerns could be channelled effectively. Participants were also informed that once the study was finalised, an executive summary of the findings would be made available to them upon request. Ethics approval for both phases of the study was obtained from the University's Ethics Committee before any fieldwork commenced (e.g. see Appendix 14).

# CHAPTER 7: RESULTS

## 7.1 Chapter introduction

This chapter presents the results of the various analyses conducted to answer the research questions and test the hypotheses posed for the two phases of the study. The first phase was concerned with developing a valid, reliable CSE scale. The three questions posed for that phase essentially asked if this was possible. In terms of the second phase, the first hypothesis proposed that there is a positive relationship between CSE and employee engagement. The second hypothesis proposed that there is a positive relationship between CSE and OCB. The third hypothesis proposed there is a positive relationship between CSE and job satisfaction. The first research question asked if CSE significantly predicts any of the organisational effectiveness variables. The second question asked if structural equation modelling can optimally explain the way the organisational effectiveness variables are influenced by CSE. First, however, the descriptive analyses of the first phase will be provided. A similar approach will be taken for the second phase, where some sample characteristics will be discussed first. Providing this descriptive information, in both instances, will ensure a clearer understanding of the analyses performed is gained in several ways (e.g. variable sample, test appropriateness etc.). This, therefore, will add richness to the general understanding of the different outputs. The main analyses will then be presented. For the first phase this means a presentation of the exploratory and confirmatory factor analysis results as well as the reliability analysis results. For the second phase, this means the results of the second round of reliability analyses conducted on the CSE scale to compare and, in effect, cross validate consistency of reliable measurement across phases. Third will be the presentation of the outcomes of the correlation and multiple regression analyses conducted. These results will help provide an understanding of the relationship between CSE and the various organisational effectiveness variables. The last set of results presented will pertain to the structural equation model conducted using the AMOS modelling tool.

In every relevant instance across the presentation of these results, the statistical significance of the relationships and appropriateness of the models presented will be provided. To be clear, a significance level of 0.05 will be used as the base level for evaluating significance. Where various models are concerned key goodness of fit indicators (e.g. RMSEA & CFI) will be presented.

## 7.2 Phase one results and discussion

### 7.2.1 Descriptive statistics

It is generally useful to understand the nature and characteristics of the data one is dealing with in descriptive statistical terms. In the context of conducting exploratory and confirmatory factor analyses as well as instrument reliability tests, while the relevance of a normal distribution is not necessarily fundamental (these analyses do not have normality as underlying assumptions), it is useful to know the basic characteristics of the data, if only to be in a position to describe it. In using R to generate the descriptive statistics for the CSE scale, figure 2 below was the resultant output. The figure details elements such as the median, mean, and normality characteristics of the data through the skew and kurtosis outputs. As stated already, none of the analyses that were conducted in this phase of the study hinged on a data set that was normally distributed. The table is therefore presented, largely for the aim of achieving completeness from a statistical procedure perspective.

**Figure 2: Descriptive statistics**

| | vars | n | mean | sd | median | trimmed | mad | min | max | range | skew | kurtosis | se |
|---|---|---|---|---|---|---|---|---|---|---|---|---|---|
| Participant | 1 | 156 | 79.78 | 45.97 | 80.5 | 79.84 | 59.30 | 1 | 158 | 157 | -0.02 | -1.23 | 3.68 |
| CSE17 | 2 | 155 | 3.46 | 1.09 | 4.0 | 3.52 | 1.48 | 1 | 5 | 4 | -0.61 | -0.41 | 0.09 |
| CSE1 | 3 | 156 | 4.05 | 1.00 | 4.0 | 4.21 | 1.48 | 1 | 5 | 4 | -1.29 | 1.22 | 0.08 |
| CSE28 | 4 | 156 | 3.56 | 1.11 | 4.0 | 3.63 | 1.48 | 1 | 5 | 4 | -0.60 | -0.55 | 0.09 |
| CSE10 | 5 | 155 | 3.50 | 1.08 | 4.0 | 3.54 | 1.48 | 1 | 5 | 4 | -0.55 | -0.71 | 0.09 |
| CSE23 | 6 | 156 | 3.71 | 1.10 | 4.0 | 3.83 | 1.48 | 1 | 5 | 4 | -0.89 | 0.16 | 0.09 |
| CSE7 | 7 | 156 | 3.65 | 1.02 | 4.0 | 3.71 | 1.48 | 1 | 5 | 4 | -0.58 | -0.44 | 0.08 |
| CSE9 | 8 | 156 | 3.88 | 0.99 | 4.0 | 3.99 | 1.48 | 1 | 5 | 4 | -0.80 | 0.16 | 0.08 |
| CSE18 | 9 | 156 | 3.64 | 1.11 | 4.0 | 3.73 | 1.48 | 1 | 5 | 4 | -0.69 | -0.37 | 0.09 |
| CSE6 | 10 | 156 | 3.35 | 1.24 | 4.0 | 3.41 | 1.48 | 1 | 5 | 4 | -0.30 | -1.04 | 0.10 |
| CSE24 | 11 | 156 | 2.99 | 1.20 | 3.0 | 2.99 | 1.48 | 1 | 5 | 4 | 0.01 | -1.00 | 0.10 |
| CSE15 | 12 | 156 | 2.89 | 1.23 | 3.0 | 2.87 | 1.48 | 1 | 5 | 4 | 0.21 | -1.04 | 0.10 |
| CSE19 | 13 | 156 | 2.79 | 1.26 | 3.0 | 2.76 | 1.48 | 1 | 5 | 4 | 0.09 | -1.24 | 0.10 |
| CSE2 | 14 | 155 | 3.71 | 1.06 | 4.0 | 3.79 | 1.48 | 1 | 5 | 4 | -0.62 | -0.39 | 0.08 |
| CSE16 | 15 | 156 | 3.42 | 1.15 | 4.0 | 3.47 | 1.48 | 1 | 5 | 4 | -0.37 | -0.77 | 0.09 |
| CSE29 | 16 | 156 | 3.72 | 1.14 | 4.0 | 3.86 | 1.48 | 1 | 5 | 4 | -0.86 | 0.01 | 0.09 |
| CSE26 | 17 | 156 | 3.31 | 1.08 | 4.0 | 3.33 | 1.48 | 1 | 5 | 4 | -0.34 | -0.85 | 0.09 |
| CSE21 | 18 | 156 | 3.42 | 1.10 | 4.0 | 3.46 | 1.48 | 1 | 5 | 4 | -0.47 | -0.66 | 0.09 |
| CSE8 | 19 | 156 | 3.94 | 1.09 | 4.0 | 4.08 | 1.48 | 1 | 5 | 4 | -1.07 | 0.32 | 0.09 |
| CSE13 | 20 | 156 | 3.51 | 1.07 | 4.0 | 3.57 | 1.48 | 1 | 5 | 4 | -0.64 | -0.33 | 0.09 |
| CSE20 | 21 | 156 | 3.61 | 1.11 | 4.0 | 3.71 | 1.48 | 1 | 5 | 4 | -0.74 | -0.09 | 0.09 |
| CSE32 | 22 | 156 | 3.29 | 1.24 | 3.0 | 3.37 | 1.48 | 1 | 5 | 4 | -0.33 | -0.92 | 0.10 |
| CSE30 | 23 | 156 | 3.48 | 1.19 | 4.0 | 3.56 | 1.48 | 1 | 5 | 4 | -0.53 | -0.71 | 0.10 |
| CSE25 | 24 | 156 | 3.43 | 1.14 | 4.0 | 3.52 | 1.48 | 1 | 5 | 4 | -0.60 | -0.38 | 0.09 |
| CSE3 | 25 | 155 | 3.68 | 1.10 | 4.0 | 3.78 | 1.48 | 1 | 5 | 4 | -0.83 | -0.04 | 0.09 |
| CSE14 | 26 | 155 | 3.81 | 1.11 | 4.0 | 3.94 | 1.48 | 1 | 5 | 4 | -0.89 | 0.13 | 0.09 |
| CSE33 | 27 | 156 | 3.45 | 1.15 | 4.0 | 3.53 | 1.48 | 1 | 5 | 4 | -0.62 | -0.50 | 0.09 |
| CSE12 | 28 | 155 | 4.01 | 0.93 | 4.0 | 4.15 | 0.00 | 1 | 5 | 4 | -1.22 | 1.40 | 0.07 |
| CSE5 | 29 | 155 | 4.01 | 0.93 | 4.0 | 4.15 | 1.48 | 1 | 5 | 4 | -1.03 | 0.76 | 0.07 |
| CSE31 | 30 | 156 | 3.69 | 1.10 | 4.0 | 3.83 | 0.00 | 1 | 5 | 4 | -1.03 | 0.39 | 0.09 |
| CSE27 | 31 | 156 | 3.61 | 1.03 | 4.0 | 3.69 | 0.00 | 1 | 5 | 4 | -0.84 | 0.14 | 0.08 |
| CSE22 | 32 | 156 | 3.75 | 1.02 | 4.0 | 3.87 | 0.00 | 1 | 5 | 4 | -1.01 | 0.64 | 0.08 |
| CSE4 | 33 | 156 | 3.88 | 0.99 | 4.0 | 4.00 | 1.48 | 1 | 5 | 4 | -0.90 | 0.43 | 0.08 |
| CSE11 | 34 | 156 | 3.62 | 0.95 | 4.0 | 3.67 | 1.48 | 1 | 5 | 4 | -0.51 | -0.14 | 0.08 |

### 7.2.2 Parallel analysis and scree plot

An exploratory factor analysis was conducted using the R package. The first step was to establish what the proposed number of factors indicated by a parallel analysis and scree plot would be given the objectives of the first phase. It must be stated right up front, in contrition to be frank, that the R package does not necessarily generate the most aesthetically pleasing graphs, diagrams or outputs (only those that have committed to mastering the numerous packages and codes of this software seem to have a chance of achieving more presentable work). As can be seen in figures 3 and 4 below, the presentation is not ideal. The scree plot, however, was clear.

The parallel analysis conducted using R suggested two possible interpretations of the data from a factor structure perspective. The first interpretation suggested a three factor structure was an option for interpreting the date, while the second suggested interpretation was that a

one factor structure was an option. The three factor structure proposed by the parallel analysis made sense as a starting point for constructing meaningful factor parameters for the CSE scale. It aligned to the current study's stated understanding and interpretation of CSE. That is, that there were primarily three elements that made up the construct (i.e. *creating an enabling environment, fostering social intrapreneurs and amplifying corporate purpose*). Therefore, the results of the parallel analysis indicating a three factor structure appeared sensible. Given the manner in which the CSE scale had been developed from that base of three factors to a more comprehensive seven factor structure, the three factor structure suggested by the parallel analysis was not seen as feasible.

The second suggested configuration, however, was surprising and interesting at the same time. That is, that there may be one factor when looking at the CSE scale. This was at odds with the expected outcome. From a theoretical perspective this implied that all the various elements of CSE, whether three, five or whatever the theoretical argument may be understood to suggest, were in fact one factor. This was problematic because conceptually, while there is a 'golden thread' that brings all of the theoretical components of the construct together, it did seem as though there were some clear conceptual distinctions that should have been represented as such under statistical conditions. That being said, the outcome, in statistical terms, is not an uncommon one. It is a commonly noted issue for many scales that are assessed using parallel analysis and the scree plot methods and this is the case because there are generally high correlations between items, even if there are clear theoretical nuances to them (Kline, 2011). So the gap between the theoretical and statistical is understandable with that contextual knowledge. Theoretically speaking, and as a starting point, the suggested three factor solution was seen as more coherent, if not fully aligned with the more detailed conceptualisation of CSE outlined by the researcher.

Interpreted in conjunction with the parallel analysis, the scree plot did seem to lend itself to both the outcomes suggested by the parallel analysis (i.e. three and one factor structures), but not in what one might consider a clear-cut manner, particularly for the three factors. Assessing the diagram, it was not surprising to find that while the scree plot is a popular and useful method of analysis, the parallel analysis method is considered superior by some, if only for its ease. This is in contrast to the scree plot which can, at times, reduce the ability to interpret with adequate precision, what the diagram is actually suggesting (Costello & Osborne, 2005). To be clear, however, in this instance both the parallel analysis outcomes as

well as the scree plot seemed to align. That is, studied carefully, the scree plot did seem to lend itself to both outcomes. When interpreting the scree plot it was observed that there was one proposed factor right at the top of the diagram and then a second at the line break. One could argue that there is then a third factor immediately after the second and before what appears to be a straightening of the line (i.e. red dotted line).

An alternative interpretation of the scree plot could be that it is actually suggesting one clear factor (i.e. the one at the top) because outside of that factor and as one observes what occurs towards the bottom of the graph, the clustering is so compressed and dense that it may be difficult to effectively identify any other meaningful break points.

To conclude, the initial parallel analysis and scree plot outputs have provided a useful starting point for determining the optimal factor structure for the CSE scale. Having assessed the suggested outcomes it was resolved that a three factor structure seemed to make the most sense as a base from which to work. The next step was to conduct an exploratory factor analysis to see if, similarly to the researcher's understanding of the concept, the three components of CSE had within them distinct and important sub-components which could be extracted to get to a more in-depth, latent understanding of the construct. That is to say, the notion of creating an enabling environment, for example, really more accurately reduced itself to specific sub-elements (i.e. leadership support, incentives and collaboration both internally and externally to the organisation where triple-bottom-line is concerned). Exploratory factor analysis is now discussed.

**Figure 3: Parallel analysis**

```
Parallel Analysis using polychoric correlations

Parallel analysis suggests that the number of factors =  3  and the number of components =  2
Call: fa.parallel.poly(x = total.data[, 2:34])
Parallel analysis suggests that the number of factors =  1  and the number of components =  2
```

**Figure 4: Scree Plot**

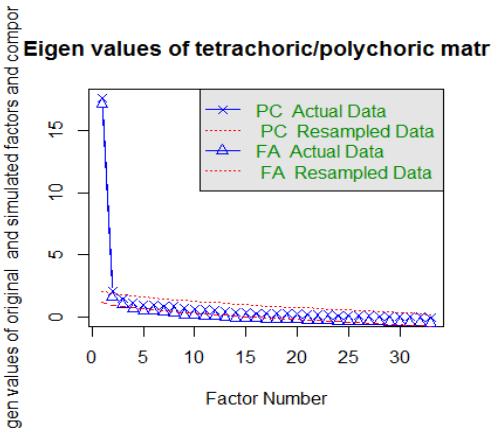


### 7.2.3 Exploratory factor analysis

The exploratory factor analysis for this phase of the study was also conducted using R. While the parallel analysis and scree plot were useful it was clear that working strictly from the statistical base provided by those initial analyses would not be sensible, even in the context of an exploratory approach. That is, testing a three factor structure would not be helpful for testing the instrument constructed as it was clear a seven, six or even five factor structure would make more sense based on the theoretical components the instrument was understood to consist of.

Therefore, in conducting the exploratory factor analysis testing an unconstrained model consisting of a seven factor structure was the chosen starting point. This would ensure consistency with the process followed for the construction of the CSE scale and ensure a more suitable statistical base from which to refine the model, if needed.

To that end, a normal seven factor EFA model was tested to ensure all plausible factors for the CSE construct were considered (see figure 5 below). As a function of the assumption that the various items were correlated, promax was used to execute the oblique rotation technique. The standardised loadings matrix figure below provides a visual of the raw output stemming from this analysis. For total clarity, the items MR1 through to MR7 represent the seven factors tested under this model and for which the relevant loadings (i.e. loading >0.4) are highlighted.

In terms of the meaning of the other output headings, communality is denoted by ‘h2’ and refers to the extent to which the variance of a specific variable (e.g. CSE1) is explained by the factor structure extracted (i.e. 0.70). Unique variance, as denoted by ‘u2’, is that variance seen in a variable (e.g. CSE18) that is not explained by the factor structure (i.e. 0.28). The complexity of the factor loading for each variable is denoted by ‘com’ in figure 5 below (e.g. CSE1 has a complexity of 1.3).

Providing an explanation of the different data output headings is meant to assist in creating context that makes effectively interpreting the output data significantly easier and more meaningful. A little later in this section a summary table is provided that may be easier to comprehend than the raw output from R. This table is accompanied by a detailed explanation of how the outputs were interpreted. Before that, however, a brief discussion of the factor extraction method used for this specific analysis is provided.

**Figure 5: EFA standardised loadings matrix**

Normal EFA, seven factors, promax rotation

Standardized loadings (pattern matrix) based upon correlation matrix

| | item | MR1 | MR3 | MR5 | MR2 | MR6 | MR4 | MR7 | h2 | u2 | com |
|---|---|---|---|---|---|---|---|---|---|---|---|
| CSE1 | 2 | 0.90 | -0.06 | -0.10 | 0.20 | -0.25 | 0.06 | -0.11 | 0.70 | 0.30 | 1.3 |
| CSE18 | 8 | 0.80 | 0.04 | 0.18 | -0.02 | 0.00 | -0.15 | 0.10 | 0.72 | 0.28 | 1.2 |
| CSE9 | 7 | 0.73 | 0.03 | -0.09 | -0.08 | 0.06 | 0.11 | -0.06 | 0.59 | 0.41 | 1.1 |
| CSE4 | 32 | 0.68 | -0.16 | 0.13 | -0.01 | 0.17 | -0.09 | 0.13 | 0.52 | 0.48 | 1.4 |
| CSE12 | 27 | 0.66 | 0.10 | -0.15 | 0.03 | 0.08 | 0.19 | 0.15 | 0.66 | 0.34 | 1.5 |
| CSE23 | 5 | 0.64 | 0.03 | 0.13 | -0.02 | 0.09 | -0.03 | 0.08 | 0.61 | 0.39 | 1.2 |
| CSE7 | 6 | 0.54 | -0.13 | 0.18 | -0.05 | 0.21 | -0.05 | -0.03 | 0.50 | 0.50 | 1.7 |
| CSE5 | 28 | 0.52 | -0.05 | -0.02 | -0.05 | 0.26 | 0.18 | 0.25 | 0.56 | 0.44 | 2.4 |
| CSE6 | 9 | 0.33 | 0.10 | 0.23 | -0.03 | 0.12 | 0.10 | -0.13 | 0.59 | 0.41 | 3.0 |
| CSE17 | 1 | 0.30 | 0.12 | 0.00 | 0.04 | 0.16 | 0.25 | -0.17 | 0.61 | 0.39 | 3.6 |
| CSE26 | 16 | -0.12 | 0.83 | 0.04 | 0.09 | 0.16 | -0.02 | 0.16 | 0.77 | 0.23 | 1.2 |
| CSE21 | 17 | -0.05 | 0.78 | 0.07 | -0.09 | -0.10 | 0.18 | 0.10 | 0.60 | 0.40 | 1.2 |
| CSE8 | 18 | 0.52 | 0.60 | -0.05 | -0.03 | -0.23 | -0.12 | 0.05 | 0.58 | 0.42 | 2.4 |
| CSE13 | 19 | -0.06 | 0.60 | -0.09 | 0.05 | 0.10 | 0.30 | -0.13 | 0.66 | 0.34 | 1.7 |
| CSE24 | 10 | 0.11 | 0.32 | 0.25 | 0.02 | 0.24 | -0.11 | -0.08 | 0.59 | 0.41 | 3.6 |
| CSE14 | 25 | 0.10 | -0.15 | 0.77 | -0.03 | -0.17 | 0.27 | 0.13 | 0.65 | 0.35 | 1.6 |
| CSE20 | 20 | -0.09 | -0.09 | 0.74 | 0.21 | -0.01 | 0.04 | 0.15 | 0.59 | 0.41 | 1.3 |
| CSE19 | 12 | 0.20 | 0.23 | 0.62 | -0.15 | 0.00 | -0.18 | -0.03 | 0.60 | 0.40 | 1.8 |
| CSE33 | 26 | -0.01 | 0.33 | 0.58 | 0.13 | -0.17 | 0.10 | 0.32 | 0.74 | 0.26 | 2.6 |
| CSE15 | 11 | -0.03 | 0.21 | 0.54 | -0.02 | 0.09 | 0.00 | -0.11 | 0.57 | 0.43 | 1.5 |
| CSE10 | 4 | 0.12 | 0.06 | 0.25 | 0.10 | -0.03 | 0.08 | -0.04 | 0.26 | 0.74 | 2.4 |
| CSE25 | 23 | 0.13 | 0.12 | -0.19 | 0.92 | 0.09 | -0.15 | -0.03 | 0.79 | 0.21 | 1.2 |
| CSE32 | 21 | -0.25 | -0.11 | 0.23 | 0.78 | 0.16 | 0.07 | 0.08 | 0.74 | 0.26 | 1.6 |
| CSE30 | 22 | 0.12 | 0.08 | 0.10 | 0.67 | 0.02 | 0.02 | 0.18 | 0.78 | 0.22 | 1.3 |
| CSE3 | 24 | 0.21 | -0.14 | 0.11 | 0.47 | -0.10 | 0.11 | -0.25 | 0.49 | 0.51 | 2.7 |
| CSE27 | 30 | 0.04 | 0.06 | -0.10 | 0.17 | 0.73 | 0.11 | 0.17 | 0.71 | 0.29 | 1.3 |
| CSE11 | 33 | 0.32 | -0.05 | -0.02 | 0.03 | 0.65 | -0.21 | 0.13 | 0.56 | 0.44 | 1.8 |
| CSE22 | 31 | 0.39 | -0.09 | -0.03 | -0.18 | 0.48 | 0.36 | 0.06 | 0.72 | 0.28 | 3.3 |
| CSE28 | 3 | 0.21 | 0.34 | -0.16 | 0.13 | 0.46 | 0.03 | 0.12 | 0.69 | 0.31 | 3.0 |
| CSE16 | 14 | -0.19 | 0.27 | 0.10 | -0.06 | 0.10 | 0.72 | -0.07 | 0.73 | 0.27 | 1.6 |
| CSE29 | 15 | 0.13 | 0.01 | 0.05 | 0.03 | -0.01 | 0.66 | 0.10 | 0.63 | 0.37 | 1.1 |
| CSE2 | 13 | 0.36 | -0.02 | 0.04 | 0.04 | -0.11 | 0.56 | 0.04 | 0.66 | 0.34 | 1.8 |
| CSE31 | 29 | 0.27 | 0.11 | 0.14 | 0.08 | 0.37 | 0.03 | 0.54 | 0.74 | 0.26 | 2.7 |

### 7.2.4 Factor extraction technique

With regard to the factor extraction technique used to test for model coherence of this unconstrained exploratory factor analysis, the Maximum Likelihood Estimate (MLE) was deployed. , This factor extraction technique is generally considered the most optimal when compared to other techniques such as unweighted least squares, generalized least squares, principal axis factoring, alpha factoring, and image factoring (Costello & Osborne, 2005). As can be seen below in the raw output from the factor extraction diagram, this method is favoured because of the variety of goodness of fit measures it provides (e.g. Tucker Lewis Index [TLI], Root Mean Square Error of Approximation [RMSEA]) as well as the computation of confidence intervals and various other helpful indices it makes available to the user. The main requirement for using this particular method is that the assumption of

normality is not blatantly violated. The data passed that particular test with a degree of comfort as it was, item by item with the exception of a few cases, within the bounds of normality as per the skewness and kurtosis outputs generated and presented under descriptive statistics.

The output below essentially indicates that a test was conducted to see if a seven factor exploratory factor analysis was feasible or not. The key indices used to determine the outcome of that test were the TLI and the RMSEA. As can be seen below, the TLI of 0.903 suggested a satisfactory fit while the RMSEA index of 0.069 was with the range of 0.05 (good fit) – 0.08 (acceptable fit).

**Figure 6: Factor extraction**

```
Mean item complexity =  1.9
Test of the hypothesis that 7 factors are sufficient.

The degrees of freedom for the null model are  528  and the objective function was  26.02 with Chi Square of  3725.9
The degrees of freedom for the model are 318  and the objective function was  3.59

The root mean square of the residuals (RMSR) is  0.03
The df corrected root mean square of the residuals is  0.04

The harmonic number of observations is  156 with the empirical chi square  164.87  with prob <  1
The total number of observations was  156  with MLE Chi Square =  496.87  with prob <  0.00000000052

Tucker Lewis Index of factoring reliability =  0.903
RMSEA index =  0.069  and the 90 % confidence intervals are  0.05 0.07
BIC =  -1108.98
Fit based upon off diagonal values = 1
Measures of factor score adequacy
```

### 7.2.5 Unpacking the factor loadings

The factor loadings for the proposed seven factor EFA were not perfect when the loading patterns seen in the raw outputs earlier were assessed against the actual items. They did, however, show sufficiently encouraging signs of alignment were appropriate item groupings were concerned. For a start, of the seven factors, three appeared to be quite clear when assessing how the items loaded and what that meant from an actual item perspective. The three were MR3 which seemed to speak to the Departmental collaboration items; the loadings for MR3 were items 26, 21, 8 and 13. All of those items were departmental collaboration items (see Appendix 9). With regards to MR2 the loadings of items 25, 32, 30 and 3 all aligned to the items specifically focused on the Corporate Social Intrapreneur. There were 3 items missing from the loadings that ought to have been present in this grouping but the

pattern was there. The third positively aligned loadings were for MR4 with the item loadings 16, 29 and 2. This loading pattern showed strong alignment to items related to organisational collaboration. So of the three factors, only MR2 loaded in an ideal, yet incomplete manner. That is, some of the other items that were expected to load meaningfully for this particular factor, found their way into other factors. Approximately 57% of the expected items loaded however, which was a reasonable outcome.

As for the other loading patterns, MR1 which aligned to leadership support items in the main, had in percentage terms, 55% expected loadings. The other items that loaded on to MR1 which should not have necessarily done so included a mixture of Mission (1 item), Values (2), Departmental collaboration (1 item) and Reward (1 below 0.4 threshold). The link for both Mission and Values to leadership, and therefore the statistically tangential result, was understandable in theoretical terms but not in keeping with expected outcomes. Departmental collaboration and Reward were perhaps a little less clear to understand in theoretical terms so those loadings were not good. There was also item 17 which had a 0.3 loading. It was included and taken note of because a loading of 0.3, while below the threshold, can be important in the broader context of scale development.

With regards to MR5 which, like MR2, seemed to align with Social intrapreneur items, 60% of the loadings were expected. Two of the unexpected items related to Reward and another that was below the 0.4 threshold related to Leadership. The factor relating to MR6 was the first with what could be described as a comparatively undefined pattern (i.e. pattern not greater than 50%). The actual loadings consisted of a mixture of Values (two items), Leadership and Mission. This formation, in purely theoretical terms, was consistent with what was found for MR1 (leadership). The last factor loading pattern, that of MR7, was inconsequential in number (there was one item that loaded) and therefore inconsequential in substance. Mission contains two scale items and it was initially believed the sole item that loaded might be one of them. It was not. It was a Values item.

So in general terms, the standardised loadings showed a certain robustness in that there was only one item (8) that cross-loaded and four items which did not quite reach the minimum threshold but still showed enough to convince they could be tested under constrained conditions. To that point, what was both helpful and encouraging was that in most cases the expected ‘base’ factor items were present in the standardised loadings. They were, at times, accompanied by items that would have ideally been better located elsewhere but the

dominant loadings in percentage terms, spoke to the items for a particular construct. An example of this was the Leadership factor (MR1). Even though leadership did demonstrate unexpected loadings in purely statistical terms, this was not necessarily the worst outcome as there was sufficient theoretical content to explain a reasonable portion of the misalignment

Given the nature of the CSE construct, in the sense that there is a lot of theoretical interplay across a number of concepts contained in it, the slightly disparate factor loadings were not seen as any sort of indication that something was fundamentally wrong with the items. For instance, it made sense that some aspects pertaining to values overlapped with leadership elements. Therefore, the loadings were more encouraging than not.

It was always clear from the start that the outcome would not be perfect with regard to EFA,. What was important, however, was that the results were generally positive and defensible, even where there were seemingly discordant deviations. The general sense after going through a focused process of EFA was that the initial proposed factor solution per the parallel analysis and scree plot was sensible and in line with the scale development process followed. The test to determine whether a seven factor solution was sufficient for providing a meaningful loading pattern and explaining the items in the model in a coherent manner also yielded positive results with reasonably coherent loadings, respectable TLI and RMSEA figures, acceptable confidence interval indices at 90% and, therefore, a generally good fit. The cumulative variance was also above the minimum threshold for the proposed seven factor solution.

In the academic world the EFA process, particularly with respect to assessing factor loadings, has been seen as both art and science. In that spirit, the aim was to keep an open mind when assessing the output and to ensure that ultimately, any decisions made regarding how the analysis moved forward following those results could be explained and defended. The data indicated that there were enough positives to continue on to the confirmatory factor analysis without amending the scale. Table 3 below provides the factor name (e.g. leadership, reward etc.), its accompanying items, the applicable standardised loading and the items that loaded on to that particular factor (both those that met the 0.4 loading threshold and those slightly below). The confirmatory factor analysis would ensure model constraints could be imposed which would give clearer insights regarding the most optimal factor structure as well as its viability. This meant a more concrete basis from which to make definitive decisions regarding keeping and removing scale items where necessary.

## Table 3: Standardised loadings

| Ideal theoretical loadings | | Standardized EFA loadings | |
|---|---|---|---|
| **Factor** | **Item number** | **(Standardized loading factor)** | **Items with 0.4 loading (0.25 -0.3)** |
| ***Leadership*** | **1.** In my organisation there is a strong commitment from our leaders to make a positive social impact.<br>**7.** Environmental performance is viewed as a key aspect of creating a sustainable business by my organisation's leaders.<br>**9.** There is a definite belief that making a positive environmental impact increases company performance in the long term.<br>**10.** The leadership team regularly reminds us that economic performance should be viewed as only one of the indicators of organisational performance and success.<br>**17.** The leadership team in my organisation consistently behaves in a manner that demonstrates their support for environmentally responsible business performance.<br>**18.** There is a definite belief that making a positive social impact increases company performance in the long term<br>**23.** The leaders of my organisation view social performance as an important indicator of the organisation's long term success.<br>**28.** Our leaders often highlight positive environmental performance as an important aspect of the organisation's approach to doing business. | 1(MR1) | 1, 18, 9, 4, 12, 23, 7, 5, 8 (6, 17) |
| ***Reward*** | **6.** Ensuring the organisation contributes positively socially plays a role in determining how well we are rewarded in my organisation.<br>**15.** There are incentives offered for innovative ideas that help us improve the environmental impact of the organisation<br>**19.** We are incentivised to come up with new ideas that can create a positive social impact in my organisation.<br>**24.** My organisation's environmental performance plays a role in determining the nature of the rewards we receive. | 2(MR3) | 26, 21, 8, 13 (24) |
| ***Departmental collaboration*** | **8.** In my organisation there is a strong belief that a positive social impact is best achieved through teamwork between departments.<br>**13.** There is collaboration between departments to improve the environmental impact of our organisation.<br>**21.** Our organisation's different department's work together to find solutions to social challenges associated with the business.<br>**26.** Within my organisation departments work together to find innovative solutions to environmental challenges associated with the business. | 3(MR5) | 14, 20, 19, 33, 15 (10) |
| ***Organisation collaboration*** | **2.** My organisation partners with other organisations to find ways of improving social outcomes.<br>**16.** My organisation collaborates with other organisations to look for ways to achieve good environmental outcomes.<br>**29.** My organisation is committed to collaborating with external stakeholders to help better society. | 4(MR2) | 25, 32, 30, 3 |
| ***Corporate Social Intrapreneur*** | **3.** Within my organisation individuals with the specific role of encouraging positive environmental performance are known by me.<br>**14.** There are people within my organisation that have the task of helping with innovating for socially responsible value creation.<br>**20.** In my organisation there are individuals who champion social value creation.<br>**25.** It is clear who the individuals responsible for encouraging my organisation to improve environmental performance are.<br>**30.** It is easy to identify the individuals who drive social performance in my organisation.<br>**32.** In my organisation individuals who drive environmental value creation are known by me.<br>**33.** In my organisation there are individuals that help our different departments develop and implement innovative ideas for a positive environmental impact. | 5(MR6) | 27, 11, 22, 28 |

| | | | |
|---|---|---|---|
| ***Values*** | **5.** Contributing positively to the environment is an important part of my organisation's values.<br>**12.** Contributing positively to society is an important part of my organisation's values.<br>**22.** My organisation's values emphasise a commitment to environmentally responsible business conduct.<br>**27.** The values of my organisation emphasise the importance of environmentally sound organisational behaviour.<br>**31.** The values of my organisation state that socially responsible business conduct is fundamental to the way we operate. | 6(MR4) | 16, 29, 2 |
| ***Mission*** | **4.** My organisation's mission statement includes a commitment to the achievement of good socially responsible performance.<br>**11.** In my organisation the mission statement articulates the importance of achieving environmentally responsible business success. | 7(MR7) | 31 |

### 7.2.6 Model variance

The cumulative variance of the exploratory factor model was 63%. In simple terms, this implies that 37% of the variance was unexplained by the model proposed. The 63% that was explained by the model was explained in a fairly well distributed manner, as can be seen when analysing the proportion explained indices. To be clear, with the exceptions of MR1 which has a high explanatory proportion (i.e. 29%) as well as MR7 which seems insignificant (i.e. 2%) the distribution is consistent, suggesting most of the factors contribute in a meaningful way.

In the context of research in the organisational and social sciences, it is generally accepted that the minimum level of variance deemed acceptable ranges from 50 – 60% (Rosenthal & Rosnow, 2008). It therefore follows that the cumulative variance seen here exceeds the maximum point of the minimum threshold range. It is important to keep in mind, of course, that the good fit indices remain the best indicator of whether the EFA is indeed sensible and those were all more than acceptable. However, the variance seen in figure 7 below is another useful data source to analyse as it provides insights regarding the model from a different perspective that enriches one's understanding.

**Figure 7: Variance analysis**

| | MR1 | MR3 | MR5 | MR2 | MR6 | MR4 | MR7 |
|---|---|---|---|---|---|---|---|
| SS loadings | 6.15 | 3.27 | 3.12 | 2.68 | 2.64 | 2.56 | 0.49 |
| Proportion Var | 0.19 | 0.10 | 0.09 | 0.08 | 0.08 | 0.08 | 0.01 |
| Cumulative Var | 0.19 | 0.29 | 0.38 | 0.46 | 0.54 | 0.62 | 0.63 |
| Proportion Explained | 0.29 | 0.16 | 0.15 | 0.13 | 0.13 | 0.12 | 0.02 |
| Cumulative Proportion | 0.29 | 0.45 | 0.60 | 0.73 | 0.85 | 0.98 | 1.00 |

To conclude on the exploratory factor analysis section though, the results of the analysis suggested that a seven factor solution is sufficient. The factor loadings for the unconstrained model were examined and deemed largely sensible, as described in detail earlier on. The RMSEA value of 0.069 as well as an acceptable TLI of 0.903 further corroborated the viability of a seven factor solution under unconstrained conditions for the CSE construct and provided a plausible model hypothesis for the confirmatory factor analysis. A decision was made on that basis, to keep the instrument as it was even though the results were not always optimal, and to test possible options in the CFA. Observations made following the constrained conditions applied for the CFA are now discussed.

### 7.2.7 Confirmatory factor analysis

In order to build on the findings of the exploratory factor analysis, this section of the first phase of the study applied the Lavaan statistical package (Rosseel, 2012) in order to execute the confirmatory factor analysis. In conducting the CFA there was sufficient confidence that the seven factor solution was a strong proposition for a viable CSE scale. There was, however, an awareness of the fact that of all the loading patterns observed, those for the 'mission' element were the weakest and least convincing. As a result, it was resolved that the base CFA assessment would be based on two models. Namely, a six factor model that excluded the mission statement factor due to its instability and a seven factor which included the mission statement.

The first model, which is seen in figure 8 below, tested the viability of a six factor solution that omitted the mission construct due to a relatively weak internal consistency score (to be discussed shortly) and other concerning statistical properties that have already been discussed (i.e. loading patterns). Much like the exploratory factor analysis, the results of the analysis are understood by focusing on three key indicators (i.e. CFI, TLI & RMSEA). This particular CFA produced a Comparative Fit Index (CFI) of 0.903 and TLI of 0.892. The RMSEA value for the six factor solution was 0.062 and the Standardised Root Mean Residual (SRMR) value was 0.059.

**Figure 8: Lavaan six factor CFA model**

| | | | | | | | | | | | | | |
|---|---|---|---|---|---|---|---|---|---|---|---|---|---|
| Confirmatory factor analysis, mission NOT included, MLM estimation, modification indices included | | | | | | | | | | | | | |
| | | | | | | | | | | | | | |
| lavaan (0.5-17) converged normally after 68 iterations | | | | | | | | | | | | | |
| | | | | | | | | | | | | | |
| | | | | | | Used | Total | | | | | | |
| Number of observations | | | | | | 152 | 156 | | | | | | |
| | | | | | | | | | | | | | |
| Estimator | | | | | | ML | Robust | | | | | | |
| Minimum Function Test Statistic | | | | | | 819.088 | 666.173 | | | | | | |
| Degrees of freedom | | | | | | 419 | 419 | | | | | | |
| P-value (Chi-square) | | | | | | 0.000 | 0.000 | | | | | | |
| Scaling correction factor | | | | | | | 1.230 | | | | | | |
| for the Satorra-Bentler correction (Mplus variant) | | | | | | | | | | | | | |
| | | | | | | | | | | | | | |
| Model test baseline model: | | | | | | | | | | | | | |
| | | | | | | | | | | | | | |
| Minimum Function Test Statistic | | | | | | 3646.018 | 3014.632 | | | | | | |
| Degrees of freedom | | | | | | 465 | 465 | | | | | | |
| P-value | | | | | | 0.000 | 0.000 | | | | | | |
| | | | | | | | | | | | | | |
| User model versus baseline model: | | | | | | | | | | | | | |
| | | | | | | | | | | | | | |
| Comparative Fit Index (CFI) | | | | | | 0.874 | 0.903 | | | | | | |
| Tucker-Lewis Index (TLI) | | | | | | 0.860 | 0.892 | | | | | | |
| | | | | | | | | | | | | | |
| Loglikelihood and Information Criteria: | | | | | | | | | | | | | |
| | | | | | | | | | | | | | |
| Loglikelihood user model (H0) | | | | | | -5699.114 | -5699.114 | | | | | | |
| Loglikelihood unrestricted model (H1) | | | | | | -5289.570 | -5289.570 | | | | | | |
| | | | | | | | | | | | | | |
| Number of free parameters | | | | | | 108 | 108 | | | | | | |
| Akaike (AIC) | | | | | | 11614.228 | 11614.228 | | | | | | |
| Bayesian (BIC) | | | | | | 11940.807 | 11940.807 | | | | | | |
| Sample-size adjusted Bayesian (BIC) | | | | | | 11598.989 | 11598.989 | | | | | | |
| | | | | | | | | | | | | | |
| Root Mean Square Error of Approximation: | | | | | | | | | | | | | |
| | | | | | | | | | | | | | |
| RMSEA | | | | | | 0.079 | 0.062 | | | | | | |
| 90 Percent Confidence Interval | | | | | 0.071 | 0.087 | 0.054 | 0.070 | | | | | |
| P-value RMSEA <= 0.05 | | | | | | 0.000 | 0.007 | | | | | | |
| | | | | | | | | | | | | | |
| Standardized Root Mean Square Residual: | | | | | | | | | | | | | |
| | | | | | | | | | | | | | |
| SRMR | | | | | | 0.059 | 0.059 | | | | | | |

The second CFA model with all seven factors demonstrated a better CFI of 0.951 and TLI of 0.945. It also had a smaller, more favourable RMSEA value of 0.030 and a SRMR value of 0.053 (see table 4). Based on these figures two things were immediately clear. First, even though the statistical output of the first analysis might have suggested otherwise, a six factor solution was not the more optimal model.it may have demonstrated reasonable statistical robustness, but it was not the strongest option available. Second, even though the 'mission' items were not particularly strong on their own, in the context of an optimal model, they made the CSE scale better in terms of statistical soundness. Perhaps more importantly though, this outcome aligned strongly with how the current study understood CSE from a theoretical perspective.

## Figure 9: Lavaan seven factor CFA model

```
mod2 <- 'Lead =~ CSE17 + CSE1 + CSE28 + CSE10 + CSE23 + CSE7 + CSE9 + CSE18
    Reward =~ CSE6 + CSE24 + CSE15 + CSE19
    Org =~ CSE2 + CSE16 + CSE29
    Dep =~ CSE26 + CSE21 + CSE8 + CSE13
    Social =~ CSE20 + CSE32 + CSE30 + CSE25 +CSE3 +CSE14 +CSE33
    Val =~ CSE12 + CSE5 + CSE31 + CSE27 + CSE22
    Mission =~ CSE11 + CSE4'

fit.mod2 <- cfa(mod2, data = total.data, std.lv = FALSE, estimator = "WLSMV", mimic = "Mplus", orthogonal = FALSE)
summary(fit.mod2, fit.measures = TRUE, standardized = TRUE, modindices = TRUE, rsquare = TRUE)

2: In lavaan::lavaan(model = mod2, data = total.data, orthogonal = FALSE,  :
  lavaan WARNING: covariance matrix of latent variables is not positive definite; use inspect(fit,"cov
> summary(fit.mod2, fit.measures = TRUE, standardized = TRUE, modindices = FALSE, rsquare = TRUE)
lavaan (0.5-18) converged normally after  60 iterations

                                                  Used       Total
  Number of observations                           152         156

  Estimator                                       DWLS      Robust
  Minimum Function Test Statistic              185.057     536.378
  Degrees of freedom                               474         474
  P-value (Chi-square)                           1.000       0.025
  Scaling correction factor                                  0.895
  Shift parameter                                          329.586
    for simple second-order correction (WLSMV)

Model test baseline model:

  Minimum Function Test Statistic            11875.452    1801.953
  Degrees of freedom                               528         528
  P-value                                        0.000       0.000

User model versus baseline model:

  Comparative Fit Index (CFI)                    1.000       0.951
  Tucker-Lewis Index (TLI)                       1.028       0.945

Root Mean Square Error of Approximation:

  RMSEA                                          0.000       0.030
  90 Percent Confidence Interval          0.000  0.000       0.012  0.042
  P-value RMSEA <= 0.05                          1.000       0.999

Standardized Root Mean Square Residual:

  SRMR                                           0.053       0.053
```

## Table 4: Summary of factor analysis results

| Factor Analysis Type (Factor Model) | Root Mean Square Error of Approximation (RMSEA) | Standardised Root Mean Residual (SRMR) | Comparative Fit Index (CFI) | Tucker-Lewis Index (TLI) |
|---|---|---|---|---|
| ***Exploratory (7)*** | 0.069 | N/A | N/A | 0.903 |
| ***Confirmatory (6)*** | 0.062 | 0.059 | 0.903 | 0.892 |

| | | | | |
|---|---|---|---|---|
| ***Confirmatory (7)*** | 0.030 | 0.053 | 0.951 | 0.945 |

Much like for the EFA process, the focus was on what made sense theoretically and it was very positive that even though the six factor model was, prima facie, the more solid statistical option, the seven factor model as developed from the theoretical elements of CSE, showed greater model characteristics. Table 4 summarises the key model fit outputs for both the EFA and CFA by outlining salient indices.

### 7.2.8 Instrument reliability

Several reliability tests were conducted for the overall scale (unidimensional view). The Omega and Guttman Lambda coefficients were both 0.98 and Cronbach's alpha was 0.96 indicating a very high reliability of the CSE construct when considered as a single factor. The individual reliability values for each of the seven factors confirmed as robust by the second CFA model were generally quite high with the exception of one factor which consisted of two scale items. The results are summarised in table 5 below.

**Table 5: Latent variable reliability values**

| **Factor designation (no. of items)** | **Cronbach alpha coefficient** | **Guttman lambda 6 (G6)** |
|---|---|---|
| ***Leadership support (8)*** | 0.89 | 0.89 |
| ***Reward (4)*** | 0.85 | 0.82 |
| ***Inter-organisational collaboration (3)*** | 0.84 | 0.78 |
| ***Dept. collaboration (4)*** | 0.86 | 0.82 |
| ***CSIntrapreneur (7)*** | 0.90 | 0.90 |
| ***Values (5)*** | 0.88 | 0.86 |
| ***Mission statement (2)*** | 0.65 | 0.48 |
| ***CSE (33)*** | 0.96 | 0.96 |

The findings of the respective analyses showed mostly positive signs with respect to the construct validity and reliability of the CSE scale in both unidimensional and multi-dimensional form.

### 7.2.9 Results summary

The findings from the exploratory and confirmatory factor analyses indicated that the theoretical content underpinning the CSE construct proposed by Austin and Reffico (2009), was robust. The exploratory factor analysis findings for instance, indicated that a seven factor model which breaks down the three core CSE elements of *enabling environment*, *CSIntrapreneur* and *corporate purpose* into the more distilled 'sub-elements', *leadership, values, mission, reward, CSIntrapreneurs and collaboration (inter and intra)* is reasonable.

A possible reason for the level of alignment seen at an exploratory stage is the broad nature of the three CSE elements coupled with the more specific nature of the conceptual components underpinning them (Austin et al., 2004; 2006). This is particularly evident for the *enabling environment* element which encompasses concepts like leadership support for positive social and environmental behaviours, a culture of rewarding actions and behaviours that way inclined as well as a propensity to collaborate within the organisation as well as with other organisations to achieve blended value. Of course, the interplay between these variables also provided context to some of the more questionable loading patterns. There was the option of applying various cut-off criteria more robustly, however, doing so would have gone against theory in an unhelpful manner and might have led to absurd results (e.g. eliminating Reward and Mission completely).

It is unsurprising that when studying the factor loading patterns for *mission* and *reward* in particular, they supported the view for a more specific breakdown of the elements. The CSIntrapreneur construct, which saw a 36% reduction of its initial 11 items during the scale refinement process, was seen as the least complex of the core elements because of how it theoretically pivots on whether (and the extent to which) organisational members experience the existence and active involvement of an individual (or set of individuals) driving socially responsible and sustainable organisational behaviours. The theoretical breakdown for this element, which touches on aspects such as knowledge, visibility and active participation, may have not yielded statistically relevant distinctions with respect to factor analysis simply because ultimately, the main construct is the existence of an agent of change and that has a distinct binary quality.

Similarly, for corporate purpose, which can be broken down into organisational values and mission statement, there were instances of intersection or more specifically, statistically unexpected loadings between the two sub-elements identified. This outcome is quite understandable given the almost inextricable nature of organisational values and mission statements. Read and understood positively, it simply gives credence to the broader designation of corporate purpose which Austin and Reficco (2009) proposed following their in-depth case studies and desktop reviews of leading companies in the field of corporate social responsibility and sustainable development. A more rigid view may have been to operate at the corporate purpose level and forgo the distinction between values and mission for a more parsimonious or efficient conceptualisation. This option was considered and deemed obstructive, particularly in the context of trying to set the base for results with practical relevance.

The confirmatory factor analysis findings were significantly more robust in supporting a seven factor model. When a six factor model was tested through the exclusion of the mission statement scale the key indicators of a good fit model were visibly lower than the seven factor model tested under the same conditions. The Comparative Fit Index and Tucker-Lewis Index values for the seven factor model suggested it was not only an acceptable model, but a model with a good fit. Even the respective RMSEA and SRMR values suggested the seven factor model was the better option. The main reason for these findings, it is argued here, is probably similar to the reasons for the outcome of the exploratory factor analysis. As empirically nascent as the concept of CSE proposed by Austin and Reficco (2009) is, the level of content richness and depth the case study approach used (Austin et al., 2002, 2004, 2006) clearly allowed for a comprehensive and conceptually strong framework to be developed. And the manner in which the current research interpreted this content when developing the scale seems to show promising signs of a robust psychometric instrument CSE instrument (Kline, 2011).

The reliability findings suggested there is a strong case for interpreting the CSE construct in singular terms as well which was consist with one of the outcomes for parallel analysis. The 33 item scale demonstrated a strong reliability (0.96) value across different measures (e.g. Guttman Lambda). This value indicated significantly better reliability than each individual subscale. In essence, this suggests that there is a high level of similarity and conceptual consistency between all of the CSE factors and, ultimately, items. So much so that

measurement of CSE could plausibly occur through the use of the less convoluted latent-variable-free approach.

This result is, at one and the same time, surprising and not. It is curious because even at the three element level there is sufficient conceptual variance to suggest that measuring CSE as one construct seems unfavourable. It is seemingly even more peculiar when the conceptual deconstruction of those three core elements into seven is taken into account. There is, however, a common conceptual thread across the elements that speaks to the importance of social value creation in conjunction with economic prosperity. The most consistent part of CSE is the focus on blended value and that probably cuts across, or perhaps more accurately, is realised through all of the elements concerned (Austin & Reficco, 2009; Huck, 2004; Kline, 2011). Perhaps that would explain the viability of both unidimensional and multidimensional applications of the scale.

While the scale was developed and tested on an acceptable but fairly modest sample both the qualitative and quantitative rigour applied in the scale's development suggest that the seven factor CSE scale possesses good construct validity and strong reliability. While more work is required to test and refine the CSE scale further still, this outcome allowed the research to reach the conclusion that these findings represented another important step in the field of corporate social responsibility that builds on the theoretical and empirical work done in order to add more academic and practical value. More importantly, it meant phase two of the study could proceed and interactions between CSE and organisational effectiveness variables could be explored.

## 7.3 Phase two results

### 7.3.1 Descriptive statistics

The demographic characteristics of the sample are presented in the table below. Before that, however, the general sample characteristics are described.

### 7.3.2 Sample characteristics

As stated in the sample and sampling strategy section for phase two, of the 232 questionnaires received it was, disappointingly, only feasible to consider 159 of those questionnaires as usable for the study's purposes. That usable data set of 159, once imported in SPSS and scored by variable, also demonstrated some moderate sample (N) variability across the different variables. The main reason for this variability, which is evident when

tracking the N statistic, is that during scoring of the different variables a rule was applied that where more than one observation was missing for any variable, that particular subject would be excluded from the analyses. The rule was slightly different for the CSE questionnaire. That is, in this instance, where *less* than 30 of the 33 items were not answered that particular subject was omitted from the analysis to minimise the impact of missing items on the output. The result is a sample range across variables that is between 148 and 159 with most of the variables consisting of a sample close to the maximum. This is useful to note in the context of the different analyses as N will not always be the same as a result of the stated variability.

**Table 6: Gender, Race and Education**

| **Gender** | **Frequency** | **Valid Percent** | **Cumulative Percent** |
|---|---|---|---|
| Male | 94 | 59.1 | 59.1 |
| Female | 65 | 40.9 | 100.0 |
| Total | 159 | 100.0 | |
| **Race** | | | |
| African | 121 | 76.1 | 76.1 |
| Coloured | 7 | 4.4 | 80.5 |
| Indian | 3 | 1.9 | 82.4 |
| White | 28 | 17.6 | 100.0 |
| Total | 159 | 100.0 | |
| **Education** | | | |
| Grade 11 or below | 6 | 3.9 | 3.9 |
| Grade 12 | 72 | 47.1 | 51.0 |
| Diploma | 46 | 30.1 | 81.0 |
| Undergraduate | 7 | 4.6 | 85.6 |
| Postgraduate | 22 | 14.4 | 100.0 |
| Total | 153 | 100 | |

The gender split of the sample was reasonably balanced with 59.1% of the sample consisting of male participants and the remaining 40.8% consisting of female participants. Table 6

provides a summary of this. The racial distribution of the participants was heavily skewed toward African participants. These participants made up just over three quarters of the full participant complement at 76.1%. Coloured and Indian participants cumulatively made up 6.3% of the participants while the remaining 17.6% consisted of White participants. A provision for "other" was made to ensure any racial group not captured by these four standard categories, as is the norm in the South African context, could be accommodated. The four categories turned out to be adequate as illustrated by table 6. As stated, before these numbers are in line with those of the economically active population statistics released the by Statistics South Africa (SSA) on a quarterly basis. Of course, this distribution does make it very difficult to compare the different racial groups in any meaningful way because of the sparse representation of the other racial groups. However, for the current study, no comparisons of that nature were required. The sample, as expected, was dominated by participants who held a matric qualification (a high school certificate) and a diploma of some kind (77.2% of the cases). A comparatively high proportion of participants held a postgraduate degree (14.4%) followed by 4.6% who held an undergraduate qualification. A low percentage of participants had completed studies at the grade 11 level or below. Six participants did not provide information regarding their educational level, hence the total of 153 instead of 159.

### 7.3.3 Tenure, age and industry

In terms of organisational tenure, the majority (71.6) of participants had spent less than ten years at their organisations with 14.2% having been with their employer for less than a year, 22% between one and two years, 11.3% between two and five years and 24.1% between five and ten years. Finally, 28.4% of the sample fell in the ten years plus category. The mean sample age was 35.38 years. The youngest participant was 20 years old and the oldest was on the cusp of retirement at 62 years. From an industry perspective, the majority of participants operated in the manufacturing environment (66.9%). The remainder of participants came from a mix of IT (9.3%), Engineering (17.9%), Mining (5.3%) and the Petrochemicals industries (0.7%).

In table 7 below a summary of the key descriptive characteristics of each of the variables present in the second phase of the study is provided. In the variable column, each of the constructs are captured at both a total scale level (i.e. what is referred to as Ultra for each aggregated variable) and at a more granular subscale level (e.g. OCB_Altruism denotes the

OCB subscale focused on altruism). The mean for each of the variables refers to the average scores achieved by the participants involved in the study. As the Likert scales used ranged between 5 – 7 point scales, where the average score is higher than 5 it is because the variable in question is on a seven point scale.

In terms of the data distribution for each variable, skewness figures for most of the variables fell either in the symmetrical range (i.e. -0.5 – 0.5) or moderately skew range (i.e. -1 – 1) implying that the data was generally normally distributed by variable. The acceptable range for considering the data normal under the Kurtosis method of evaluating is figures between (-2 – 2). Anything falling outside of that may suggest the variable data is skew. As can be seen from the table below, most of the variables fell within the bounds of normality. This corroborated what the skewness data was suggesting. Histograms of the data are provided shortly for further clarity.

**Table 7: Descriptive statistics table**

| Variable | N | Mean | Standard Deviation | Skewness | Kurtosis |
|---|---|---|---|---|---|
| ***OCB_Altruism*** | 156 | 5.8612 | .86438 | -1.013 | .934 |
| ***OCB_Courtesy*** | 157 | 5.8029 | .85298 | -.823 | .647 |
| ***OCB_Consc*** | 156 | 5.7795 | .87885 | -.944 | .560 |
| ***JS_Ultra*** | 159 | 5.7390 | 1.11717 | -.880 | .554 |
| ***OCB_Ultra*** | 148 | 5.4581 | .63379 | -.748 | .246 |
| ***OCB_CivicV*** | 155 | 5.0973 | .96254 | -.478 | -.308 |
| ***OCB_Sport*** | 156 | 4.6503 | 1.10829 | -.499 | -.539 |
| ***EE_Job*** | 157 | 3.9510 | .59386 | -.474 | .075 |
| ***CSE_Mission*** | 158 | 3.9367 | .68824 | -.823 | 1.268 |
| ***CSE_Value*** | 159 | 3.9305 | .64785 | -.336 | -.141 |
| ***EE_Ultra*** | 153 | 3.9096 | .50292 | -.595 | .250 |
| ***EE_Org*** | 154 | 3.8797 | .59426 | -.597 | .523 |

| | | | | | |
|---|---|---|---|---|---|
| ***CSE_Lead*** | 157 | 3.8728 | .65053 | -.649 | .368 |
| ***CSE_Org*** | 154 | 3.7814 | .73444 | -.453 | .205 |
| ***CSE_Dep*** | 160 | 3.7776 | .82595 | -.697 | .214 |
| ***CSE_Ultra*** | 158 | 3.7553 | .65329 | -.347 | -.171 |
| ***CSE_Social*** | 160 | 3.6220 | .74407 | -.359 | -.232 |
| ***CSE_Reward*** | 159 | 3.3643 | .99283 | -.312 | -.918 |

### 7.3.4 Normality

The distribution of data of the main variables is shown in the four figures below (i.e. figure 10 – 13), starting with CSE. In that regard these variables were assessed using histograms and cross validation could be done by using the skewness and kurtosis statistics that have already been discussed. The histogram though, generally provides a very good sense of the nature of the distribution.

Corporate social entrepreneurship demonstrated a sufficient level of symmetry and seemed to be normally distributed. This variable was, in all instances, used as the independent variable in the study both at the composite construct level as assessed in the histogram above (i.e. Ultra), as well as at the subscale level as seen in the descriptive statistics table. The Skewness figure of -0.347 further corroborates the normal nature of the distribution for CSE as it sits within the bounds of normality (i.e. -0.5 – 0.5).

**Figure 10: Histogram of CSE scale (i.e. Ultra)**

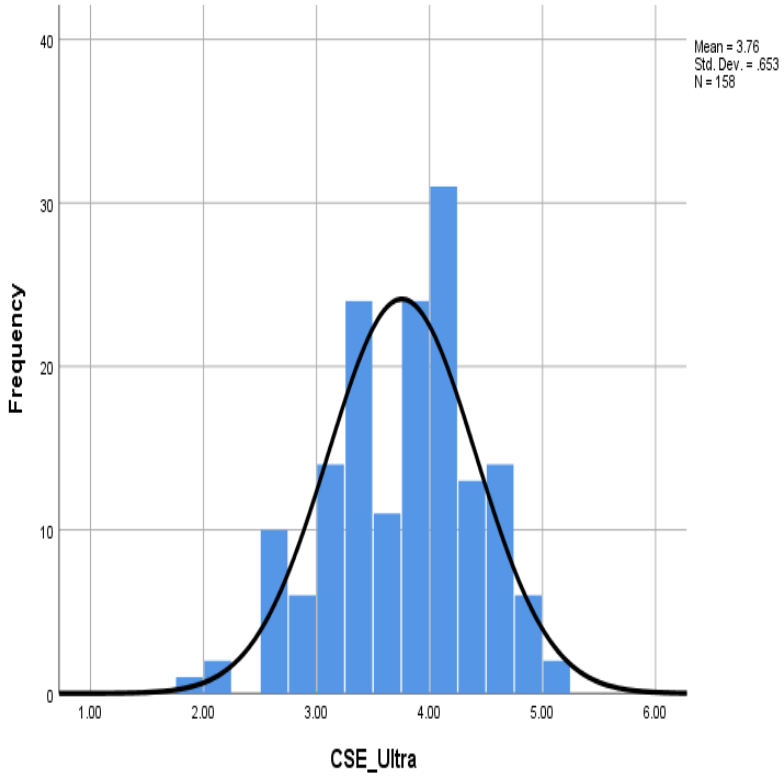


Organisational citizenship behaviour, as shown in figure 11 below, appeared slightly different to CSE and demonstrated a moderately skewed profile based on the histogram below. The descriptive statistic output seen regarding skewness for this particular variable was -0.748 (i.e. between -1 and -0.5 and 0.5 - 1) which suggested moderate skewness. The fact that the construct was measured on a seven-point scale may have contributed to the nature of the distribution.

**Figure 11: Histogram of OCB scale data distribution**

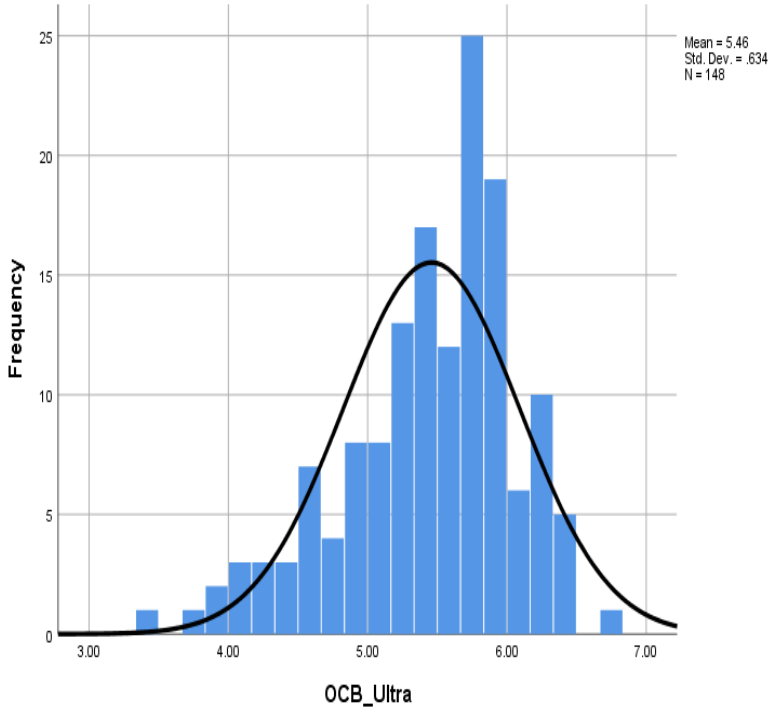


Job satisfaction, seen below, was clearly asymmetrical, with a bias toward the right side of the graph. This is not surprising given that a three item, seven-point scale was used to measure the construct. Also, much like OCB, job satisfaction would most likely be highly variable both within and between organisations.

**Figure 12: Histogram of Job satisfaction scale data distribution**

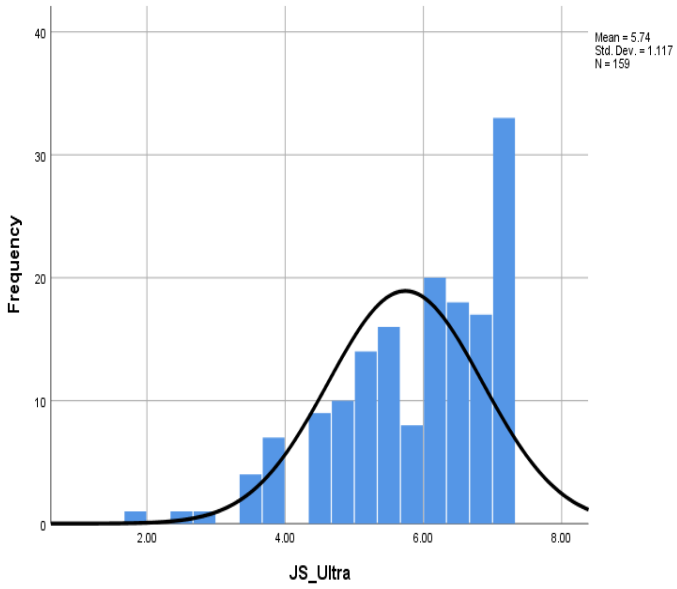

Employee engagement, like CSE, showed a very good level of symmetry and looked to be normally distributed. The Skewness measure (-0.5) corroborated this observation. Interestingly, where job satisfaction and organizational citizenship behaviour were both non-normal in their distributions (to varying degrees), employee engagement, as the other organisational effectiveness variable, was not. Reflecting on some of the reasons this may be the case, the fact that a five-point scale was used and that the questionnaire contained eleven items, as opposed to three for job satisfaction, may be a key factor.

**Figure 13: Histogram of Employee Engagement data distribution**

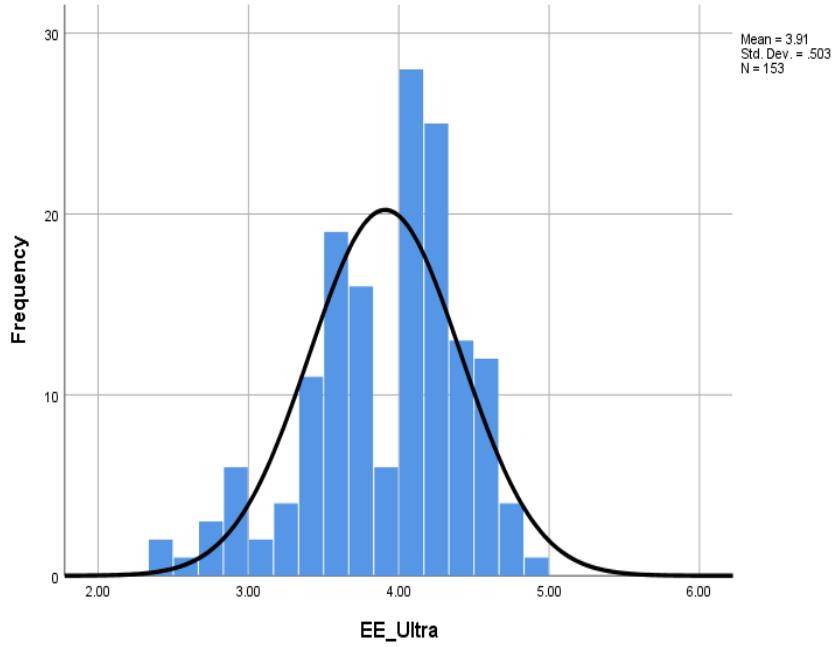


In summary, the skewness results of the descriptive statistics indicated that corporate social entrepreneurship as well as employee engagement were normally distributed, and that organisational citizenship behaviour and job satisfaction were not. A histogram analysis was conducted to get a more visual confirmation of those results and the respective graphs indeed confirmed that CSE and employee engagement were normally distributed while job satisfaction and organisational citizenship behaviour were not. Where the data was non-normal, non-parametric tests would be used to ensure the appropriate statistical outcome was reached.

### 7.3.5 Reliability

The reliability analysis of the CSE scale conducted during the second phase of the study revealed a reasonably similar pattern to what was found in terms of reliability in the first phase of the study. This was the case for the CSE scale in its totality as well as for most of the

subscales. As was the case during the first phase, very strong reliabilities were observed for most of the subscales (see reliability analysis table 8 below). While the *mission* scale continued to demonstrate average reliability during the second phase the only other scale that was perhaps not consistently strong in terms of reliability was the organisational collaboration scale. This might have been a function of the fact that these particular subscales consisted of two items and three items respectively. In general, while there were a few instances of slight reliability variability scores in the second phase results as compared to the first phase results, what was apparent is that in general terms, the scale and subscales seem to have a strong level of reliability across two unique sample sets. The reliabilities tie in well with the proposed factor structure conceptualised and tested during the first phase of the study.

So the CSE scale demonstrated statistical qualities that indicate it is robust enough to use for various analyses, particularly in the context of an exploratory study of this nature. Both the Cronbach alpha and Guttman lambda analyses confirmed this.

**Table 8: Corporate social entrepreneurship reliability analysis**

| CSE variable (no. of items) | Cronbach alpha Phase 1 | Cronbach alpha Phase 2 | Guttman lambda 6 Phase 1 | Guttman lambda 6 Phase 2 |
|---|---|---|---|---|
| *Leadership support (8)* | 0.88 | 0.85 | 0.88 | 0.85 |
| *Reward (4)* | 0.86 | 0.87 | 0.83 | 0.84 |
| *Inter-organisational collaboration (3)* | 0.79 | 0.75 | 0.73 | 0.68 |
| *Dept. collaboration (4)* | 0.85 | 0.84 | 0.81 | 0.80 |
| *CSIntrapreneur (7)* | 0.88 | 0.86 | 0.88 | 0.86 |
| *Values (5)* | 0.87 | 0.82 | 0.84 | 0.80 |
| *Mission statement (2)* | 0.64 | 0.60 | 0.47 | 0.43 |
| *CSE (33)* | 0.96 | 0.96 | 0.96 | 0.94* |

*Lambda 5 iteration utilised where lambda 6 was unavailable

What follows is a presentation of the correlation and regression analyses results in relation to the research hypotheses and questions posed. The hypotheses related results will be presented first.

**Research hypotheses and questions**

*Hypothesis 1:* There is a positive relationship between CSE and employee engagement

*Hypothesis 2:* There is a positive relationship between CSE and OCB?

*Hypothesis 3:* There is a positive relationship between CSE and job satisfaction

Does CSE significantly predict any of the organisational effectiveness variables?

Can structural equation modelling optimally explain the way the organisational effectiveness variables are influenced by CSE?

### 7.3.6 Pearson correlation

With respect to hypothesis 1, the correlation analysis yielded the results provided in table 9 below. The result of the Pearson correlation for corporate social entrepreneurship and employee engagement (As explained earlier, the term 'ultra' refers to the full scale for the construct referenced) indicated a significant positive relationship between the two variables ($r = 0.472$, $p < .01$). So, based on this outcome the first hypothesis was supported by the result.

**Table 9: Corporate social entrepreneurship and employee engagement**

| | | EE_Ultra |
|---|---|---|
| CSE_Ultra | Pearson Correlation | .472** |
| | Sig. (2-tailed) | .000 |
| | N | 152 |

**. Correlation is significant at the 0.01 level (2-tailed).

The result of the Spearman's correlation for corporate social entrepreneurship and organisational citizenship behaviour also indicated a significant positive relationship between the two variables ($r = 0.218$, n 148, $p < .01$). Admittedly, even though positive and significant, the relationships strength could be described as weak. Nonetheless, the result supported the second hypothesis.

The result of the Spearman's correlation for corporate social entrepreneurship and job satisfaction indicated a significant positive relationship between the two variables ($r = 0.343$, n 157, $p < .01$). While not as strong as the relationship corporate social entrepreneurship was found to have with employee engagement, job satisfaction did demonstrate a moderately strong relationship with that construct. This result supported the third hypothesis.

### 7.3.7 Spearman's Correlation

**Table 10: Corporate social entrepreneurship, organisational citizenship behaviour and job satisfaction**

| | | | OCB_Ultra | JS_Ultra |
|---|---|---|---|---|
| **Spearman's** | **CSE_Ultra** | Correlation Coefficient | .218** | .343** |
| | | Sig. (2-tailed) | .008 | .000 |
| | | N | 148 | 157 |

**. Correlation is significant at the 0.01 level (2-tailed).

With respect to the three hypotheses proposed, all showed positive and significant relationships with varying levels of strength. These results were not surprising, with the exception perhaps of the rather weak relationship organisational citizenship behaviour had with corporate social entrepreneurship. These results will be discussed and explained in greater detail in the next chapter.

Beyond establishing the nature of relationships that exist between corporate social entrepreneurship and the respective organisational effectiveness variables, an understanding was sought regarding the extent to which CSE, positioned as an independent variable, could explain the change in those variables and their subconstructs. To that end, multivariate analysis techniques would be employed. The first of these techniques applied was multiple linear regression.

### 7.3.8 Multiple linear regression

Multiple linear regression was applied to answer the first of the two research questions posed in the second phase of the study. That is, whether corporate social entrepreneurship significantly predicts any of the organisational effectiveness variables. The first organisational effectiveness variable assessed was employee engagement.

### 7.3.9 Multicollinearity

Before evaluating the model and coefficients for each regression analysis it was essential to assess whether the assumptions underlying the analysis were met. The first assumption tested in that regard was that of multicollinearity. In testing for multicollinearity it was assessed whether the respective predictor variables were not too highly correlated as that would imply some of those variables would need to be excluded from the model for a higher degree of analytical precision. A number of indicators were used to assess the nature of the relationship between the predictor variables. The first was the correlation matrix for corporate social

entrepreneurship as seen in table 11. This correlation matrix provided a breakdown of the relationship strength between employee engagement and each of the predictor variables, but more importantly for testing for multicollinearity, the strength of the relationship between the predictor variable subconstructs (CSE variables).

While it is important that there is a degree of strength in the relationships between predictor variables (i.e. r = 0.3 or 0.4) , it is important that these relationships are not too strong (r = 0.7 or more) (Howell, 2010). The CSE correlation matrix revealed that a number of the predictor variables were quite highly correlated. In particular, CSE lead showed inappropriately strong relationships with all but one predictor variable (i.e. CSE_Mission) suggesting it was a prime candidate for removal from the regression analyses. The strongest of these relationships was with CSE_Value which looks at the extent to which the values of an organisation align to the principles of corporate social entrepreneurship. In many ways, given the centrality of leadership in defining the values of an organisation, this perhaps was unsurprising.

Another variable with a fairly high number of 'undesirably' strong relationships with other predictor variables was CSE_Dept which assesses the extent to which inter-departmental collaboration occurs for the purpose of achieving blended value. The rest of the CSE predictor variables each showed signs of multicollinearity for a maximum of three of the other six CSE predictor variables or, as was the case for CSE_Mission, no multicollinearity at all (This may have to do with this particular variable's poor psychometric properties).

**Table 11: Corporate social entrepreneurship correlation matrix**

| CSE Correlation Matrix | | | | | | | | |
|---|---|---|---|---|---|---|---|---|
| | **EE_Ultra** | **CSE_Lead** | **CSE_Reward** | **CSE_Org** | **CSE_Dep** | **CSE_Social** | **CSE_Value** | **CSE_Mission** |
| **EE_Ultra** | 1.000 | .452 | .405 | .356 | .422 | .387 | .430 | .381 |
| **CSE_Lead** | .452 | 1.000 | .718 | .806 | .792 | .728 | .854 | .691 |
| **CSE_Reward** | .405 | .718 | 1.000 | .651 | .745 | .714 | .666 | .512 |
| **CSE_Org** | .356 | .806 | .651 | 1.000 | .749 | .664 | .773 | .558 |
| **CSE_Dep** | .422 | .792 | .745 | .749 | 1.000 | .645 | .742 | .609 |
| **CSE_Social** | .387 | .728 | .714 | .664 | .645 | 1.000 | .739 | .568 |
| **CSE_Value** | .430 | .854 | .666 | .773 | .742 | .739 | 1.000 | .640 |
| **CSE_Miss** | .381 | .691 | .512 | .558 | .609 | .568 | .640 | 1.000 |

For better rigour two additional measures of collinearity, Tolerance and Variance Inflation Factor (VIF), were assessed to help decide which variables to use for the regression analysis (see the coefficients tables). With respect to Tolerance, any figure less than 0.1 suggests that there is multicollinearity for a specific variable. If figures are greater than 0.1 the indication is that there is likely no multicollinearity (Howell, 2010). The results suggested that apart from CSE_Lead which was just above the 0.1 threshold, the variables were reasonably above that threshold. Similarly, even if from a converse standpoint, VIF values of above 10 are generally viewed as indicating high multicollinearity. The VIF values for CSE seemed to suggest that all the variables were well below that threshold. Therefore, on balance, given the three statistics assessed to get a feel for whether multicollinearity was present at alarming levels, it was decided the best option was to keep the model the same as there was enough evidence (perhaps minimally so for CSE_Lead) to suggest multicollinearity was not pervasive between the predictor variables.

### 7.3.10 Normality

The second key assumption that needs to be met before executing multiple linear regression analyses is normality of the dependent variables. In order to asses this the normal probability plot was used along with a histogram. For the normal probability plot confirmation was sought that the data points aligned sufficiently close with the line of best fit. Ideally there should not be any major deviations from normality. Assessing the graphs below, there was a reasonable level of alignment for the dependent variables. Admittedly, organisational citizenship behaviour and job satisfaction had deviations from the line of best fit which were more apparent when compared to employee engagement, however, these were not deemed too concerningly divergent.

In terms of outliers, scatterplots were conducted to check if there were any data points which exceeded the critical values of -3 and 3. Employee engagement as well as organisational citizenship behaviour had no data points outside of the critical values while job satisfaction had a single data point just outside of -3. This outcome suggested that there were no concerning data points which could, in effect, distort the general nature of the data (Howell, 2010).

In addition to assessing the scatterplots against the critical values, Cook's distance (the maximum score) for each of the dependent variables was assessed to check that there were no cases greater the 1. Employee engagement had a maximum value of 0.139. Organisational citizenship behaviour had a maximum score of 0.228 and job satisfaction 0.223. The outcomes of all these assessments confirmed that key assumptions for conducting meaningful multiple linear regression analyses were met.

**Figure 13: Normal P-Plot for Employee Engagement**

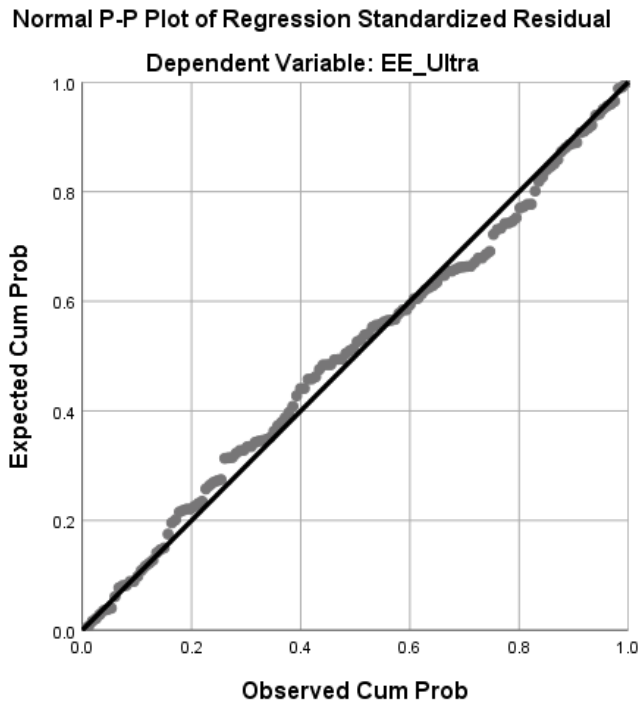

**Figure 14: Normal P-Plot for Organisational Citizenship Behaviour**

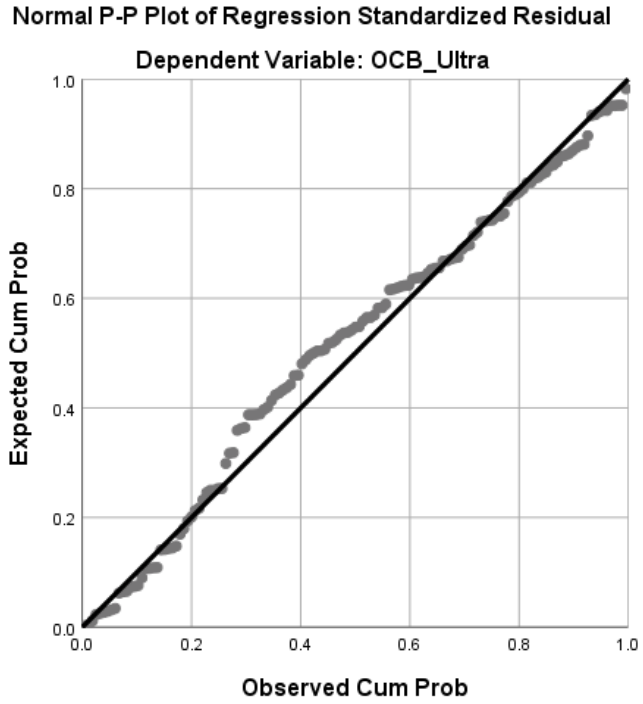


**Figure 15: Normal P-Plot for Job satisfaction**

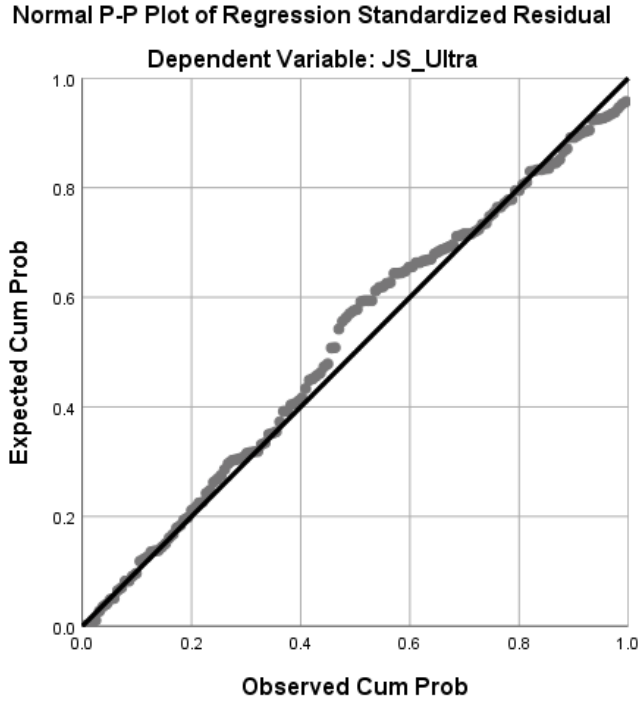

### 7.3.11 Multiple linear regression: employee engagement

The model for predicting employee engagement from the CSE sub-scales demonstrated a reasonably strong R square of 23.6%. This would suggest that close to a quarter of employee engagement behaviour could be explained by CSE. This is a reasonably sizeable contribution as far as explanatory power is concerned (Howell, 2010). The analysis of variance in this instance also indicated that a statistically significant relationship exists between the variables F (7, 143 = 5.989, p <.01).

Working from the decision to keep all of the variables in the model based on the assessment of key collinearity indices, multiple regression analysis for CSE and employee engagement was conducted. This yielded no statistically significant results (see table 12). The model seemed robust enough given the R square yield of 23.6%, however, the result was that no statistically significant predictor variables were seen.

**Table 12: Multiple linear regression model for dependent variable employee engagement**

| Model Summary[b] | | | | |
|---|---|---|---|---|
| Model | R | R Square | Adjusted R Square | Std. Error of the Estimate |
| 1 | .485[a] | .236 | .196 | .45812 |
| a. Predictors: (Constant), CSE_Mission, CSE_Reward, CSE_Org, CSE_Social, CSE_Dep, CSE_Value, CSE_Lead | | | | |
| b. Dependent Variable: EE_Ultra | | | | |

**Table 13: CSE regression coefficients for employee engagement**

| Coefficients | | | | | | |
|---|---|---|---|---|---|---|
| **Variable** | **β Coefficient** | **Standard error** | **t value** | **P value** | **Tolerance** | **VIF** |
| **CSE_Lead** | .186 | .146 | 1.024 | .308 | .171 | 5.861 |
| **CSE_Reward** | .113 | .067 | .884 | .378 | .343 | 2.919 |
| **CSE_Org** | -.118 | .096 | -.857 | .393 | .296 | 3.373 |
| **CSE_Dep** | .108 | .090 | .761 | .448 | .277 | 3.606 |
| **CSE_Social** | .038 | .088 | .301 | .764 | .352 | 2.842 |
| **CSE_Value** | .115 | .125 | .726 | .469 | .224 | 4.461 |
| **CSE_Mission** | .099 | .082 | .935 | .351 | .497 | 2.011 |

p = < .05

### 7.3.12 Multiple linear regression: organisational citizenship behaviour

When analysing organisational citizenship behaviour as the dependent variable and the different CSE subscales as predictor variables, the multiple regression analysis yielded the following outputs. Firstly, the R Square noted was a small 10.5% implying that CSE explains 10.5% of the variance in organisational citizenship behaviour. The analysis of variance (ANOVA) suggested that all the CSE elements taken together resulted in a significant association with organisational citizenship behaviour. That is, the relationship between the variables, in general terms, was statistically significant F (7,142 = 2.270, p <.05).

The coefficients seen in table 15 indicated that none of the predictor variables explained organisational citizenship behaviour in a statistically significant way. This was not surprising given that employee engagement, with a more than doubled R square figure, also demonstrated a similar outcome in the previous analysis.

**Table 14: Multiple linear regression model for dependent variable OCB**

| Model Summary[b] | | | | |
|---|---|---|---|---|
| Model | R | R Square | Adjusted R Square | Std. Error of the Estimate |
| 1 | .324[a] | .105 | .059 | .62281 |
| a. Predictors: (Constant), CSE_Mission, CSE_Reward, CSE_Org, CSE_Social, CSE_Value, CSE_Dep, CSE_Lead | | | | |
| b. Dependent Variable: OCB_Ultra | | | | |

**Table 15: CSE regression coefficients for OCB**

| Coefficients | | | | | | |
|---|---|---|---|---|---|---|
| **Variable** | **β Coefficient** | **Standard error** | **t value** | **P value** | **Tolerance** | **VIF** |
| **CSE_Lead** | .112 | .202 | .570 | .570 | .170 | 5.880 |
| **CSE_Reward** | .254 | .091 | 1.853 | .066 | .351 | 2.847 |
| **CSE_Org** | -.090 | .131 | -.602 | .548 | .296 | 3.382 |
| **CSE_Dep** | -.063 | .123 | -.401 | .689 | .271 | 3.686 |
| **CSE_Social** | -.179 | .120 | -1.317 | .190 | .359 | 2.783 |
| **CSE_Value** | .091 | .169 | .538 | .592 | .230 | 4.351 |
| **CSE_Mission** | .184 | .117 | 1.561 | .121 | .475 | 2.106 |

*p = < .05

### 7.3.13 Multiple linear regression: Job satisfaction

Job satisfaction had an R square of 23% suggesting that CSE explained, in approximate terms, that same percentage of variance for job satisfaction. The ANOVA indicated a statistically significant relationship exists between the variables in the model F (7, 147 = 5.958, p <.01).

The results in the coefficients table 17 indicated that one variable meaningfully predicted job satisfaction. The variable in question was in fact Lead β = 0.353, t (147) = 1.985, p < .05. This was a clear improvement from the previous results which yielded no statistically significant results.

**Table 16: Multiple linear regression model for dependent variable job satisfaction**

| Model Summary[b] | | | | |
|---|---|---|---|---|
| Model | R | R Square | Adjusted R Square | Std. Error of the Estimate |
| 1 | .479[a] | .230 | .191 | 1.00173 |
| a. Predictors: (Constant), CSE_Mission, CSE_Reward, CSE_Org, CSE_Social, CSE_Dep, CSE_Value, CSE_Lead | | | | |
| b. Dependent Variable: JS_Ultra | | | | |

**Table 17: CSE regression coefficients for Job Satisfaction**

| Coefficients | | | | | | |
|---|---|---|---|---|---|---|
| **Variable** | **β Coefficient** | **Standard error** | **t value** | **P value** | **Tolerance** | **VIF** |
| **CSE_Lead** | .353 | .316 | 1.985 | .049* | .174 | 5.737 |
| **CSE_Reward** | -.180 | .146 | -1.416 | .159 | .342 | 2.925 |
| **CSE_Org** | -.132 | .209 | -.976 | .331 | .299 | 3.341 |
| **CSE_Dep** | -.060 | .196 | -.424 | .672 | .274 | 3.652 |
| **CSE_Social** | .125 | .194 | .994 | .322 | .346 | 2.887 |
| **CSE_Value** | .255 | .270 | 1.655 | .100 | .232 | 4.318 |
| **CSE_Mission** | .072 | .179 | .686 | .494 | .498 | 2.008 |

*p = < .05

It is evident that the correlations and multiple regressions analyses provided important data regarding interactions between CSE and the organisational effectiveness variables, at the different levels of analysis (i.e. the main construct level and subscale level where CSE was

concerned). The final step was to determine how best, if at all, the different variables could be optimally represented using structural equation modelling (SEM). Almost similarly to the analytical progression made from correlation to regression, moving from multiple regression to SEM allowed for a deeper understanding of the data and the various interactions between variables. The next section of this chapter reports on the results obtained from the SEM analyses conducted to answer the last research question of the second phase of the thesis.

### 7.3.14 Structural equation modelling

Structural equation modelling (SEM) provides a powerful and flexible method of assessing, in greater depth and with a fair degree of ease, the nature of relationships between variables (Kline, 2011). While generally argued to be similar, if not identical to regression analysis, this method is seen as actually building on the multiple regression analyses (Kline, 2011). The primary aim, in this instance, was to use a specific type of SEM technique called path analysis, to find the optimal model to represent the relationship between the four main variables analysed by the study.

As a statistical technique, path analysis takes further the depth of analysis of relationships between variables that regression and multiple regression techniques are used to assess (Kline, 2011). In this instance, path analysis was used to test the plausibility of various sequential interactions between the different variables investigated in this research. Each path was conceived on clear theoretical grounds. Also, because of the potential interchangeable nature of the organisational effectiveness variables in sequential terms (i.e. OCB, JS and EE), there was a degree of flexibility applied where the question of endogenous and exogenous status was concerned for these variables. That is, all three variables could be argued to fall easily into both categorisations so there was a sizeable level of flexibility applied in model conceptualisation.

Following confirmation that the key assumptions that needed to be met for multiple regression to be used were in fact met, and because these apply almost identically with respect to path analysis (i.e. Normality ((Skewness & Kurtosis)), outliers and linearity, and crucially, multicollinearity) path analyses were conducted.

### 7.3.15 Path analysis

The fit indices for the main variable path models developed, as well as diagrammatic representations of those paths is provided below. To be clear, the first set of paths presented pertain to models at the main variable level only.

**Table 18: Model fit indices for path models**

| Fit indices | Model 1 | Model 2 | Model 3 | Model 4 |
|---|---|---|---|---|
| *Chi-square(p-value)* | 3.843 (.146) | 28.674 (.000) | 9.183 (0.10) | 51.846 (.000) |
| *RMSEA* | .076 | .290 | .150 | .396 |
| *CFI* | .985 | .777 | .940 | .583 |
| *NFI* | .970 | .779 | .929 | .600 |

**Figure 16: Diagram of path analyses**

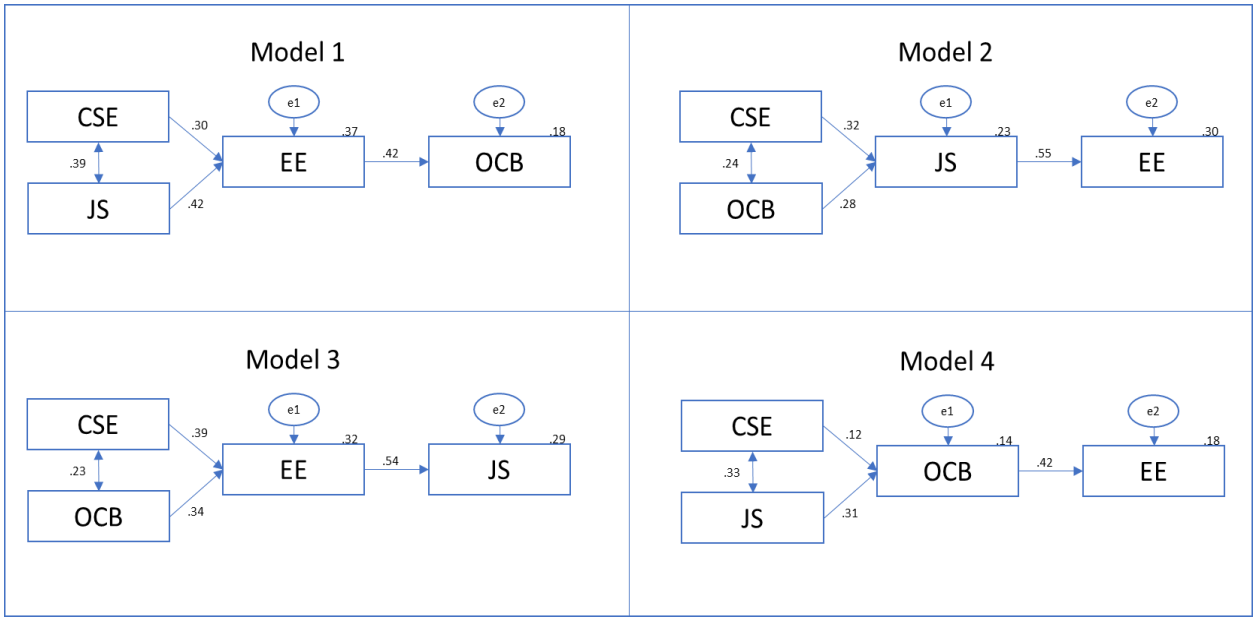


As can be seen when analysing figure 16 as well as the model fit indices in table 18 above, four theoretically plausible possibilities were explored from a path analysis perspective at the main variable level. The results suggested that, while strong positive relationships exist in many direct interactions between variables across the different proposed paths, from a model fit perspective only one possibility emerged with a reasonably robust and viable statistical SEM representation.

The path charted in model one of figure 16, which is also model one in the fit indices table, met the stated requirements from a model fit perspective and represented the most optimal and viable SEM for the variables in this study. That is to say that the chi squared result for the

model was not significant, meaning there was no difference between the model proposed and the most optimal model according to the statistical programme used. Second, CFI was greater than 0.9 as it was 0.985. Lastly, the RMSEA figure for model 1 was just below the 0.08 threshold (an acceptable fit is represented by an RMSEA between 0.05 – 0.08). The RMSEA for model one was within acceptable parameters (i.e. 0.076).

So, in combination with job satisfaction and employee engagement as the mediating variable, and organisational citizenship behaviour as the outcome variable, CSE was most optimally represented in a path analysis. Put differently, where a strong positive relationship exists between corporate social entrepreneurship and job satisfaction (r = 0.50), it is likely that employee engagement will act as a statistically valid mediator between those two variables and organisational citizenship behaviour. This would imply that employee engagement is an essential part of the causal chain that links CSE and job satisfaction to organisational citizenship behaviour.

What is important to note at this stage is that a viable SEM representation of the variables in question was indeed found and that this is quite significant, especially given the nascence of the concept of corporate social entrepreneurship. As far as knowledge creation is concerned, and contributing positively in particular, every finding is valuable where fairly new constructs are concerned but when viable path models are found in the same context, it is probably a little more significant.

### 7.4 Results summary

The results of the second phase of the study are summarised as follows:

*Correlations*

- CSE and EE had significant positive relationship ($r = 0.472$, $p < .01$)
- CSE and OCB had a significant positive relationship ($r = 0.218$, $p < .01$)
- CSE and JS had a significant positive relationship ($r = 0.343$, $p < .01$)

*Multiple linear regression*

- Only one significant predictor variable was found across all the models tested (i.e. CSE lead and job satisfaction)

*Structural equation modelling*

- Four models of varying theoretical strength were tested
- Only one of the different models tested yielded satisfactory model fit indices (model 1)

### 7.5 Conclusion

This chapter has explained concisely the outcomes of the different analyses conducted to test the stated hypotheses of phase two and the research questions as well. The results were generally positive. The next chapter will focus on unpacking the theoretical dynamics possibly at play in the results obtained. Where possible, empirical research will also be drawn upon to explain and critically evaluate the results, and to work towards reaching a sensible conclusion about what the combination of theory, empirical research and statistics may actually mean in practical terms and how it can be leveraged by researchers, theorists, practitioners and organisations in general.

# CHAPTER 8: DISCUSSION

## 8.1 Introduction

The manner in which corporate social entrepreneurship has been conceptualised and validated in this study represents an novel view into what is an unresearched concept. This is evident in the very nature and design of this research study and its focus on generating and evaluating a number of firsts. In large part, the research has been quite exploratory in that novel foundational work has been done to aid a general understanding firstly, of corporate social entrepreneurship and secondly, the way the construct interacts with three central constructs in organisational psychology. Holding a strong awareness of the above will enable a clearer understanding of the novelty of the findings as well as how the chapter is structured.

This chapter discusses the study's results and what they could mean in terms of addressing the research questions and hypotheses. To do this effectively, previous empirical research will be drawn upon where possible. It is important to emphasise the fact that there is not much previous research within the corporate social entrepreneurship field. As a result, a lot of the sense-making in relation to the statistical results will be through the use of theoretical inferences and deductions. That is to say, the discussion chapter may not take the shape of a traditional academic discussion because of the dearth of research directly addressing the central construct of the current study. It will, however, strive to provide novel and important insights.

Before the commencement of a discussion of the results, it may be useful to provide an overview of the aim and rationale of the study to position the discussion appropriately.

## 8.2 The study's aim and rationale

The current study consisted of two aims that were dealt with in two distinct research phases. The study's first aim was to develop a CSE scale. The second aim, contingent on the outcome of the first, was to assess the relationship between CSE, employee engagement, organisational citizenship behaviour and job satisfaction. The reason for embarking on this exercise was that it became apparent from the literature review that corporate social entrepreneurship has been researched from a business model perspective that attempts to understand the constituent components involved in realising it (Austin & Reficco, 2009). What was also apparent is that there had been no research that has focused on developing a

means of measuring the extent to which employees experience corporate social entrepreneurship in their work environments.

As a result, there have been no measures developed to facilitate the assessment of the extent to which corporate social entrepreneurship is experienced by organisational members. Therefore, the current study believed it was important to develop and validate a CSE scale to facilitate the measurement of CSE in the organisational context. The kind of impact CSE has on employee-centred constructs has also not been widely investigated, so its impact on internal organisational functioning constituted a gap in knowledge. The current study sought to address that gap by investigating the impact of CSE on internal organisational functioning by attempting to understand its interactions with employee engagement, OCB and job satisfaction.

The results of each phase of the research study are now discussed.

### 8.3 Phase one discussion summary

The first phase of the study set out to answer the following three research questions:

- Does the CSE scale demonstrate satisfactory content validity?
- Does the CSE scale demonstrate satisfactory internal consistency?
- What is the most sensible factor structure for the corporate social entrepreneurship construct?

The development of the CSE scale was based on the conceptual paper by Austin and Reffico (2009) and their explanation of the constituent parts of corporate social entrepreneurship. A choice to exclude certain aspects of the work of the authors was made in this process, specifically the notion of double value creation. Briefly, it was earlier argued that in many respects, this element of corporate social entrepreneurship was more of an outcome. Therefore, it could be measured in different ways that were perhaps more meaningful or objective than using internal perceptions as the measure.

The sequence of the research questions for the first phase meant that it consisted of a three-step process. Firstly, following careful consideration of the work done by Austin and Reficco (2009) items were constructed based on the different elements of the concept. Various experts in fields synonymous with at least one of the elements involved in the construct were engaged to get feedback on the quality of the items produced. This led to a refinement of the

scale based on feedback detailed in the scale development section earlier in the thesis. The third and final step was to deploy the produced instrument and conduct analyses to determine whether or not it was statistically viable from a reliability and construct validity perspective using the appropriate statistical techniques.

The results were positive in that the instrument demonstrated a high level of reliability at a macro-scale level as well as at the subscale levels, barring one or two exceptions (e.g. 'mission' items). To be clear, both the Cronbach Alpha and Guttman Lambda reliability indices for the respective subscales of CSE showed reliability scores mainly in the range between 0.75 and 0.9 which suggested the scales demonstrated an acceptable internal consistency.

Perhaps more importantly regarding the CSE scale's statistical characteristics, however, was the encouraging output seen in terms of the scale's construct validity. The instrument demonstrated structural coherence that, from a factor analysis perspective, aligned well with the theoretical framework applied for CSE. That is to say, the item loadings across the seven factors identified for CSE (e.g. Leadership support, reward, values, CSIntrapreneur etc.) were broadly in line with expectations and suggested that the CSE scale was measuring what it set out to measure. This alignment was apparent based on the exploratory factor analysis results. It was then confirmed during the confirmatory factor analysis.

The reason the confirmatory factor analysis was reassuring is because an alternative six factor structure which eliminated the mission construct because of its poor statistical characteristics (i.e. erratic loading pattern and average reliability scores) was tested and found to show a poorer model fit compared with the seven factor structure. In simple terms, the CSE scale was stronger with the mission construct included than not. That would suggest even from a statistical perspective it is an integral part of the CSE construct.

As stated before during a discussion earlier in the thesis, the scale items could have been reduced further based on the findings of the EFA process in particular, but a decision was made to give the CSE construct the benefit of doubt unless something seemed radically wrong, especially in the confirmatory factor analysis process. This meant the scale was left unchanged with 33 items (When directions for future research are discussed this point will be revisited).

This outcome led to the conclusion that the scale constructed was both reliable and valid enough to proceed to the second phase of the study where the construct would be assessed in relation to its interactions with important organisational effectiveness constructs (employee engagement, organisational citizenship behaviour and job satisfaction). Without appearing to be overly enthusiastic about the outcome of the first phase of the study, it was, limitations aside (as will be discussed in the limitations section), incredibly positive given the highly exploratory nature of the work undertaken. As a result of the outcome of the first phase of the study, a reliable and valid scale had been developed. Not only that, but the fact that the current study's interpretation of CSE identified five central factors which could be interpreted as seven factors suggested that, in addition to being a viable conceptual framework in broad terms, CSE lends itself to more than one interpretation of its constituent parts and configuration. This seems plausible because it turns directly on how much specificity one wishes to extract when trying to understand the concept. It also means there is a reasonable degree of flexibility regarding how the concept can be understood and measured. This is a significant, unique contribution to the literature on CSE and the theoretical development of the construct.

These finding also meant that the second phase of the study could proceed with the possibility of more insights being generated with respect to CSE in its interactions with other constructs.

### 8.4 Phase two

In dealing with the results of the second phase, identical to the structure used in the first phase, the approach will be to discuss the findings of each hypothesis and research question. Where appropriate links will be drawn between these individual components. In addition, a summary will be provided to consolidate the arguments developed individually.

#### 8.4.1 Phase two hypotheses

**H1: There is a positive relationship between CSE and employee engagement.**

The first hypothesis the research aimed to test was whether there was a positive relationship between corporate social entrepreneurship and employee engagement. The hypothesis was based on a combination of the key underlying theoretical drivers of employee engagement, empirical research (e.g. Kahn, 1990; Saks, 2006; Wolmarans & Sartorius, 2009) on employee engagement and other variables with reasonably similar characteristics to corporate social

entrepreneurship. The results of the analysis conducted confirmed there was a significant and strong positive relationship between corporate social entrepreneurship and employee engagement (r = 0.472). This implies that where the organisational environment has reasonably strong CSE people are likely to be, as Kahn (1990) described it, more psychologically present. That is, the cognitive, emotional and physical effort individuals in those organisations are likely to exert would be more pronounced and apparent than in places where that is not the case. It seems sensible that this would be the case because the very nature of CSE talks to a higher purpose that is realised through the creation of blended value. To understand why this may be the case though, employee engagement needs to be unpacked a little more and explained in the context of corporate social entrepreneurship.

In an organisational environment where the stated mission and values reflect a higher purpose and desire to contribute positively to the society one operates in, it is likely that the level of motivation amongst most individuals and the desire to want to approach their work with purpose and enthusiasm would be higher than in an environment that does not. Saks (2006) noted that in developing a model of engagement, Kahn (1990) highlighted three key psychological conditions (i.e. meaningfulness, safety and availability). The first two of these conditions is most pertinent here to explain the nature of the relationship between the two constructs in the hypothesis.

When referring to meaningfulness Kahn (1990) focused on the extent to which an employee derived purpose from the work they were expected to perform. This sense of meaningfulness was not reserved only for an individual's work tasks, however. It also extended to the broader organisational reality of an employee. If in an employee felt their work was important to the organisation and society as a whole, they would most likely derive meaning from their work context and meet one of the three psychological conditions Kahn had outlined. Feeling a sense of purpose would be a key aspect enabling the individual to bring their whole selves to work (Kahn, 1990; Rothbard, 2001; Saks, 2006).

So activities undertaken at the organisation level as well as the job level determined if and how much meaning an employee would derive from work. This suggests that meaning is a function of the extent to which an employee sees their values as being congruent with those of the organisation they work for where societal impact is concerned. If the initiatives undertaken by the organisation in relation to society resonate with a person they are likely to be engaged at the job level. If this is coupled with a feeling that one's job is also meaningful,

this is likely to mean a person has very strong reasons to be fully engaged (Bradley, 2014; Kahn, 1990; Saks, 2006). And in many instances, because the employees that work for a particular organisation live in the communities that organisation operates in, there is a vested interest in seeing that society prosper (Saks, 2006; Bhatnagar & Biswas, 2010). The possible implication of this, which is visible in the results obtained from this exploratory study, is that engagement is positively affected by an environment that promotes corporate social entrepreneurship. Of course, the reverse is also possible.

In order to understand how employee engagement might positively affect CSE it is useful to consider what the broad characteristics typically shown by an engaged employee actually are. Employees who are engaged are understood to have and display a positive attitude. They are seen as loyal members of their organisations who take pride in the work they do (Saks, 2006). They are aligned to the business mission, foster good working relationships and look for opportunities to grow (Kahn, 1990; Saks, 2006; Pitt, 2012). Considering all of that, it is possible that in an environment where the leadership team has introduced CSE into their organisation, engaged employees will buy into the idea and play their part in driving it. In a situation like this, the presence and strength of CSE would, in some part, be the result of a workforce that was already reasonably engaged and predisposed to making the objectives of CSE a success. This is a plausible way of understanding how the positive significant relationship found between CSE and engagement could be understood in a different way.

Thus, as far as H1 of the research study being confirmed, all the reasons informing the formulation of this hypothesis seem to effectively explain its outcome. That is, from an engagement perspective both at the job and organisation level there are clear theoretical reasons why engagement, individually and in aggregate terms, has been found to be positively correlated with CSE. In addition to that, the fact that CSE has been shown to be accommodating of the salient psychological condition of creating meaningfulness in the work context really strengthens the theoretical understanding of the results.

On a more practical level, given the manner in which employee engagement was operationalised using a scale that segmented the construct into organisation and job engagement (Saks, 2006), it is perhaps even clearer why such a positive relationship, was observed. Saks (2006), largely drawing on the work of Kahn (1990), represented engagement as occurring on two levels within the organisational context. Job level engagement, which speaks directly to the extent to which engagement is created as a function of the job one

performs, and organisation level engagement, which speaks to the extent to which organisational happenings facilitate a level of engagement

In trying to further explain the outcome of the first hypothesis in this study, empirical research is a very useful point of reference. As highlighted earlier, CSE is under-developed. The process of building up a wide-ranging body of knowledge on it may take some time still. This poses a challenge as far as providing empirical data that can enable a less theoretical line of discussion.

In contrast, however, employee engagement is better formed and more well-researched. That said, finding empirical research focused specifically on CSE and engagement is not possible as there seems to be no research directly addressing these issues. There are, however, a number of studies that have looked at employee engagement in the context of corporate social responsibility which may be of some use in providing a point of reference for the result reported for the first hypothesis. The introductory section of the discussion highlighted that inferences would need to be made if a meaningful discussion is to be presented. Empirical work in the literature review on CSR and employee engagement is now drawn upon to make sense of the outcome of H1.

In a study conducted by Ferreira and Oliveira (2014) where the impact of CSR on employee engagement was assessed the researchers found that there was generally a positive relationship between employee engagement and CSR. That research aligns to the findings of the current study, highlighting how a climate supportive of work focused on making a social impact creates an environment in which people can be more engaged than would have ordinarily been the case. The research design applied by Ferreira and Oliveira (2014) consisted of three different groups, each exposed to a particular CSR programme (i.e. general, internal & external).

While the researchers found a positive relationship between employee engagement and all these different forms of CSR they also reported finding no statistically significant differences between employees exposed to the internal and external CSR programmes as far as engagement was concerned (Pitt, 2012; Wolmarans & Sartorius, 2009). As a reminder, internal CSR refers to aspects focused specifically on the employee like work-life balance, health and safety and training while external CSR refers to work that makes a societal impact (Carroll, 2006). In terms of making sense of why there was no statistically significant

difference between the internal and external CSR groups, it is possible that quite simply, the underlying notion of making a contribution that improves the welfare of one's fellow workers is as meaningful as that of making a positive contribution externally. Interestingly though, while there was no statistically significant difference in engagement between those exposed to internal compared to external CSR, those who were exposed to internal CSR showed higher levels of engagement. The higher levels of engagement with internal CSR are in line with the current study's findings.

A study conducted by Albdour and Altarawneh (2012) also found that there is a positive and significant relationship between CSR and employee engagement. Their study, which was conducted with a sample of people working in the financial services industry, noted that CSR seemed to predict organisation engagement more strongly than job engagement. The findings of the study, conducted using frontline staff operating in the banking sector in Jordan, are broadly consistent with the current research's findings for the hypothesis pertaining to employee engagement. It should be noted however, that the dimensions that are used for CSR in Albdour and Altarawneh's (2012) study (i.e. training and education, human rights, health and safety, work life balance and workplace diversity) are not that closely aligned with corporate social entrepreneurship as conceived by the current research. This makes reasonable inferences to CSE challenging but it is still insightful.

A survey study conducted by Sirota Survey Intelligence (2007) also found that the relationship between CSR and employee engagement was stronger where employees indicated they were satisfied with the kind of initiatives their organisation was involved in. In a more recent study conducted by Chaudhary (2017) the results also indicated a positive interaction between employee engagement and CSR. What's more, after assessing whether gender differences existed with respect to this interaction between CSR and employee engagement and reaching the conclusion that no differences exist, Chaudhary concluded that this is evidence that CSR can really be useful in facilitating improved employee engagement.

All of these studies corroborate the findings of the current research as far as H1 is concerned. It seems clear that CSR plays a pivotal role in the extent to which employees feel connected to their organisations and their willingness to bring their whole selves to work. There are not many studies that have found either no meaningful relationship between CSR and employee engagement or indeed an inverse relationship. Even in 'less' academic pieces of work, an example being an article referencing a study conducted by Towers Perrin during 2007 – 2008

by Bahl (2017), the observation is made that employee engagement can receive a boost from the presence of CSR and that participating in CSR programmes provides employees with an opportunity to derive a sense of meaning beyond their normal everyday work and also has the potential to facilitate a 'feel good' factor within them. A further observation was made that apart from improving engagement at the individual level, CSR programmes could facilitate improved relations between employees and therefore positively affect the sense of organisational cohesion (Bahl, 2017).

After doing a basic search on the relationship between CSR and employee engagement the evidence shows a generally positive relationship between the two constructs, even where the conceptualisations of CSR differ. Attempts to try and find evidence of research showing something to the contrary were unproductive. So, it would seem that the fact that a strong, significant and positive relationship was found in the current study, between CSE and employee engagement, is sensible and in line with studies conducted on CSR and employee engagement. Of course, while CSR is the strongest proxy for CSE the current research can work with, the impact of the corporate entrepreneurial element is missing from these studies. It is therefore useful to also assess some of the available studies that have looked at how employee engagement has been found to interact with the concept of corporate entrepreneurship. This is useful because corporate entrepreneurship is one of the key building blocks of CSE. It makes sense then that it would provide more helpful insights as we try and make sense of the result seen in H1.

In a study conducted by Hoque, Gwadabe and Rahman (2017) the researchers aimed to establish the role employee engagement played between corporate entrepreneurship and innovation. The researchers had as their primary hypothesis the idea that employee engagement plays a mediating role between corporate entrepreneurship and innovation. While the findings of the research for that hypothesis indicated that employee engagement is not a mediator of the relationship between the two constructs, they did find that a significant, positive relationship exists between corporate entrepreneurship and employee engagement. So seemingly, environments that encourage and reward corporate entrepreneurship are likely to have more highly engaged employees. Kassa and Raju's (2015) study is another which set out to investigate the relationship between corporate entrepreneurship and employee engagement. Their findings also indicated that corporate entrepreneurship predicted engagement effectively.

Beyond these two studies it was a struggle to find any peer-reviewed research looking at the two constructs. So it is difficult to make statements about the constructs with a high level of confidence. Nevertheless, from a combination of the findings of engagement with CSR as well as with corporate entrepreneurship a clear pattern emerges. That is, CSR, in all its forms, has a positive and statistically significant relationship with employee engagement. Corporate entrepreneurship also seems to have a positive relationship with employee engagement. In one of the studies that relationship was found to be statistically significant. If it is accepted that CSR and corporate entrepreneurship together provide a good idea of how other variables might relate to CSE then it makes sense that the result for H1 was that CSE has a significant and positive relationship with employee engagement. In concluding the discussion regarding H1 it is perhaps also useful to share the findings of a study that looked at the conditions that make it difficult for employees to engage with CSR. This overview may also help to explain why CSE was found to be positively related to employee engagement.

Slack, Corlett and Morris (2014), taking a case study approach to exploring some of the challenges that make it difficult for employees to effectively engage *with* CSR, found that impediments to effective engagement were things like a low or weak culture of CSR and poor alignment of CSR to strategic business goals. Slack et al (2014) also found that poor organisational communication with respect to the attitude and approach to CSR that a firm adopted also played a significant role in how effectively employees engaged with it. In the context of the result for H1 their findings are salient for a few reasons. Firstly, the very nature of CSE means that its objectives are directly linked to the business strategy and objectives. In fact, it is a key driver of these and also forms a core part of the organisation's DNA. Therefore, it is unlikely employees will not be able to make the link between it and the strategy. It is also unlikely that it would be experienced as a weak part of the culture of an organisation. So those impediments fall away and allow employees to feel engaged because it forms an important part of their jobs as well as their organisational reality.

The other aspect identified as problematic in getting employees to engage with CSR was poor communication. Again, in relation to this particular aspect, CSE ensures the message of positive social impact and the creation of blended value is embedded in the mission statement of an organisation as well as in the catalogue of values. It also encourages the deployment of full-time resources specifically focused on driving innovation focused on blended value creation. Finally, and probably most importantly, because its effective implementation is

premised on the active communication and incentivisation of its principles by the organisational leadership, it should be felt and understood by almost all employees and enable them to engage with it more effectively. It is therefore no surprise, given the very nature of the construct, that it is positively and significantly correlated with employee engagement.

As stated earlier in the discussion, and certainly worth re-emphasising, were we to look at the result of this first hypothesis of the current study in isolation, it seems sensible that it would be defensible on many of its own merits, given the nature of the construct of corporate social entrepreneurship and its aspiration to a higher purpose of double value creation (Austin and Reficco, 2009). It is difficult to imagine more potent constructs, in the organisational context, that would facilitate feelings of psychological presence than the belief that one's work contributes to both financial performance and positive social and/or environmental outcomes that are likely to be personal to the individual (Kahn, 1990; Saks, 2006). So as far as results go in the context of empirical enquiry, the result for H1 would certainly be one of the least surprising. Perhaps this is a good place to conclude the discussion pertaining to the H1 findings. The findings of H2 are now discussed both theoretically and empirically.

**H2: There is a positive relationship between CSE and organisational citizenship behaviour**

The second hypothesis tested by the current study was whether a positive relationship existed between CSE and organisational citizenship behaviour. The result for this analysis indicated that a statistically significant, positive relationship does in fact exist. The strength of the relationship was, however, not strong ($r = 0.218$). Indeed, it looked moderately weak in general statistical terms as well as in comparison to the results obtained for employee engagement discussed in the previous section and job satisfaction (to be discussed in the next section).

As described in the literature review, Organisational Citizenship Behaviour (OCB) is a construct that is used to explain those behaviours displayed by employees that go beyond formal job descriptions. These actions and behaviours are pro-social in nature and contribute towards enhancing organisational performance in some way (Becton, Giles & Schraeder, 2008). Organ (1988) described OCB as "individual behaviour that is discretionary, not directly or explicitly recognized by the formal reward system, and that in aggregate promotes the effective functioning of the organisation" (p. 4).

Surveying the literature for empirical studies on OCB and CSR was difficult. Much like employee engagement, it was found that little empirical research exists on the relationship between OCB and CSR (Ramsden, 2015). In some ways it is difficult to understand why this is the case given the nature of the variables and the amount of literature on both. Nonetheless, the research that is available provides some useful insights. For example, Choi and Yu (2014), testing a number of hypotheses pertaining to perceptions of CSR (they describe it as corporate sustainability in their work) and organisational performance, found a significant and positive relationship between CSR and OCB. Similarly, Ong, Mayer, Tost and Wellman (2018) tested the link between CSR and OCB using a complex research design consisting of three different 'mini studies' that incorporated pro-social motivation and task significance as potential moderators and mediators of the relationship. One of the results indicated that there was no significant relationship between CSR and OCB when task significance was used as the moderating variable. For what it is worth, a significant relationship was found between CSR and task significance (Ong et al, 2018). In positioning their research study however, Ong et al (2018) start by stating that scholars have widely acknowledged the positive relationship between the two constructs (i.e. OCB and CSR) indicating that the non-significant result they found in their study was not in line with prior research.

In another study, Fu, Ye and Law (2014), testing the validity of a theoretical model proposing an indirect relationship between CSR and OCB, found that an indirect relationship does exist. Their study, using a sample of 450 participants operating in the hospitality industry, found that both organisational commitment and identity, played mediating roles in the relationship between CSR and OCB. This particular result is important given the outcomes of the structural equation modelling of the current study that will be discussed later. A similar result was found by Newman, Nielsen and Miao (2014) in their study. Their results revealed that employee perceptions of CSR towards social and non-social stakeholders influenced OCB. Even in the context of trying to make sense of the basic relationship between the two constructs, perhaps the role and importance of sensible mediating factors explains why the direct relationship found for H2 was weak, even if positive and statistically significant. Unfortunately, no previous research that considers the relationship between corporate entrepreneurship and OCB could be found. Interestingly though, Luu (2017) did find that corporate entrepreneurship mediates the relationship between CSR and OCB.

Contemplating the purely theoretical nature of corporate social entrepreneurship, in an attempt to understand the empirical result only on that basis, there are a number of interpretations and conclusions that could be drawn. As a starting point, it seems sensible that a positive relationship between corporate social entrepreneurship and OCB would exist. The strength of the relationship though, under careful consideration, was a little more difficult to theorise on. Given the nature of OCB, it seemed simultaneously plausible that the strength of that relationship could be strong or weak.

The reasoning behind the idea that it could be a strong relationship is that engaging in CSE would largely resemble modelling citizenship-like behaviour in the course of everyday business in some respects This is the case because the fact that CSE encourages innovative behaviour that is for the betterment of the company and society as a whole, seems to have some OCB characteristics (e.g. altruism, civic virtue). So employees could easily self-assess as real organisational citizens who go above and beyond, even if some of the behaviours are recognised in a formalised reward system.

Ironically, it is also possible that because the reward system recognises 'higher purpose' behaviours that is the reason why employees might not demonstrate behaviours that go above and beyond those expectations on a consistent basis. It seems possible that because CSE raises the bar for what OCB would actually mean, OCB would not necessarily have a strong positive relationship with this construct. To be clear, if behaviours ordinarily seen as indicative of OCB are normalised because of the expectations placed on individuals by a concept like CSE, one would need to do more to legitimately claim they are a true organisational citizen. It is a simple case of standards being increased so that a new baseline is created for other expectations. As a result of this the relationship between CSE and OCB, while positive, may not be particularly strong.

Another way to understand why the relationship between OCB and CSE is difficult to predict in terms of strength is by looking at the dimensions of OCB more closely. The construct of OCB consists of five dimensions (altruism, courtesy, sportsmanship, conscientiousness & civic virtue). In that context some of the dimensions seem like they are more likely to relate well with CSE (e.g. sportsmanship, civic virtue) while others might not, like altruism and courtesy (Bolino, Klotz, Turnley & Harvey, 2013). The potential tension between a reward system that recognises people for working to contribute positively to society and the organisation might put a strain on notions and perceptions of altruism and courtesy.

Conversely though, civic virtue and sportsmanship might relate well with the idea of collaboration and the idea of trying to successfully create blended value (Becton et al., 2008; Jafari & Bidarian, 2012).

**H3: There is a positive relationship between CSE and job satisfaction**

The third hypothesis tested by the current study was whether there is a positive relationship between CSE and job satisfaction. The results indicated that a positive and significant relationship exists between the two constructs. The strength of the relationship was moderately strong (r = 0.343), meaning it fell between employee engagement and OCB in relation to CSE. As stated in the literature review, the construct of job satisfaction in industrial psychology and the management sciences in general, holds a special place given its long standing empirical and theoretical significance. This is because, in purely philosophical terms, the objective of trying to determine those factors that lead to employee job satisfaction has been seen to be one of the most noble and important (Dormann & Zapf, 2001; Fahr, 2011; Sen, 2008; Robbins et al, 2003).

The definition of job satisfaction, in the simplest terms, is the extent to which a person likes (or not) the actual work that they do (Dormann & Zapf, 2001). Some researchers have gone as far as measuring jobs at the task level and found that certain job tasks demonstrate higher job satisfaction than others (Taber & Alliger, 1995). On aggregate though, the scores of the individual tasks broadly aligned with the score of overall job satisfaction. So the essence of it remains that job satisfaction is about the extent to which people like their jobs. There are a few reasons this construct has been popular over many decades. The primary one though, is that theorists have contended knowing the underlying factors regarding why a person is or is not satisfied with their job has a bearing on many organisational psychology concepts (e.g. motivation, job design, leadership, engagement, OCB etc.). Therefore understanding it can help our understanding of other aspects of work and the psychology of it.

In the context of CSE, it seemed sensible to hypothesise that job satisfaction would have a positive relationship with that construct. As stated when discussing the other organisational effectiveness variables, the nature of CSE seems to provide an environment that is dynamic and supportive in many respects. For instance, the emphasis on leadership support and rewards for impactful social and economic behaviour by employees provides a meaningful set of characteristics organisational members can relate to and use as a tangible basis from which to derive positive feelings about their work. Because these expectations would be built

into their jobs and the manner in which their departments operate, it is seems sensible to think that this would flow through into their work and contribute toward their feelings of satisfaction (Austin & Reficco, 2009). Much like job engagement, job satisfaction seems to be likely to have a positive relationship with CSE because one's job and specific job tasks are crafted in a way that promote meaningful work (Sen, 2008).

So, in theoretical terms, a construct like job satisfaction, which intersects so many other organisational psychology constructs, seems likely to interact well with a construct like CSE. It seems apparent that there is a strong possibility of a significant amount of meaning being derived from doing work focused on achieving the objective of creating blended value (Sen, 2008). It also seems apparent that fostering such meaning could be a source of a healthy level of job satisfaction. The nature of the interaction between CSE and job satisfaction seems to have significantly less tension than what was the case with OCB. It is also almost as strong as the relationship seen between CSE and employee engagement. The correlation seen then, for CSE and job satisfaction does seem to make sense theoretically. Of course, the other elements of CSE such as values, CSintrapreneurs and collaboration within departments and between organisations also contribute to the sense of job satisfaction one might derive as they may also flow through into one's job in some way. At the heart of it though, the general idea of CSE, in aggregate terms, does seem to lend itself to a favourable level of job satisfaction.

In terms of empirical studies on job satisfaction and corporate entrepreneurship, Kuratko, Hornsby and Bishop (2005) found that a positive relation exists between job satisfaction and perceptions of a corporate entrepreneurial environment as well as corporate entrepreneurship outcomes. They also indicated that job satisfaction mediates the relationship between corporate entrepreneurial environment and actions. In a study also conducted in South Africa Van Wyk and Adonisi (2012) found that positive and significant correlations existed between extrinsic job satisfaction and the constructs of work discretion, rewards and innovative initiatives. This result seems to corroborate the idea that rewards and the ability to contribute broadly through one's own work results can garner feelings of satisfaction within individuals. These researchers also found that intrinsic job satisfaction showed a significant and positive relationship with rewards and work discretion in the context of corporate entrepreneurship. In another study looking at corporate entrepreneurship and job satisfaction, Antoncic and Antoncic (2011) assessed how employee satisfaction interacts with the notion of intrapreneurship and growth. They found that there is a positive and significant relationship

between employee satisfaction and intrapreneurship as well as growth from an organisation perspective. While the parallels to the current study's results are not so clear here in relation to growth, they certainly are in relation to intrapreneurship. In their research, Akehurst, Comeche and Galindo (2009) found that job satisfaction has a direct and positive relationship with internal entrepreneurial activities suggesting that the ability to partake in these activities, or at the very least be exposed to them, has a real bearing on the extent to which satisfaction is derived from one's job. So there are a good number of studies on corporate entrepreneurship and job satisfaction that suggest that both the theoretical assertions made as well as the result seen in the current study for H3 make sense. The same holds true for studies looking at CSR and job satisfaction.

In a study by Tziner et al (2011) they found that CSR has a positive relationship with job satisfaction. The study also found that organisational justice mediates the relationship between CSR and job satisfaction. A study by Vlachos, Panagopoulos and Rapp (2013) found that perceptions of charismatic leadership influenced the extent to which job satisfaction was experienced in relation to CSR. That is, the more charismatic the leader the more satisfied people were with their jobs and the organisation's CSR programme. Of course, a critical component of creating effective CSE is ensuring a transformational leadership style is present to energise employees and get their support for achieving blended value. Therefore the finding that charismatic leadership helps improve job satisfaction in a CSR focused environment affirms the critical role good leadership plays and aligns well with the concept of CSE.

The last study highlighted here was conducted in Bangladesh by Raihan and Karim (2017). The aim of the study was to understand the nature of the relationship between CSR and job satisfaction among employees in multinational companies. The results of the study showed there was a positive and significant relationship between the two constructs. So it is clear that job satisfaction correlates positively, and in many instances significantly, with both corporate entrepreneurship and CSR. It is also very clear, assessing the various studies individually, that things like rewards, leadership style and the idea of intrapreneurship all play an important role in the interactions between these variables (Antoncic & Antoncic, 2011; Van Wyk & Adonisi, 2012). The results of all this previous research would suggest the H3 result of a moderately strong, positive and significant relationship between CSE and job satisfaction

was to be expected and is consistent with what has been found in the past with similar constructs.

The research questions presented in phase two are now discussed along with the outcomes of their respective analyses.

**Research question 1: Does CSE significantly predict any of the organisational effectiveness variables?**

In order to answer this research question multiple linear regression analyses were conducted against each of the organisational effectiveness variables. The first model focused on employee engagement and tried to assess if any of the CSE subconstructs showed any significant predictive power in relation to it. The result of this analysis suggested that CSE accounts for 23.6% of the change in employee engagement. A closer analysis revealed that of the factors that make up CSE, none showed statistical significance with employee engagement. This was a little surprising considering the strength of the relationship between CSE and employee engagement as determined through correlation analysis. Also, it was peculiar in the context of a sizeable change in employee engagement being accounted for by CSE.

It is possible that the issue of multicollinearity may have been the reason there were no statistically significant predictor variables for this multiple regression analysis. However, even if this was the case, CSE leadership, which showed the most concerning signs of multicollinearity, would have been a good candidate for demonstrating statistical significance. However, even that predictor variable was not significant. In light of the correlation result as well as the sizeable 23.6% change in engagement accounted for by CSE the outcome of this multiple linear regression was somewhat surprising.

Perhaps the result reflects the fact that CSE in totality is a significant driver of engagement. Where employee engagement is concerned, from a predictive perspective, it would seem that the whole is greater than the sum of its parts. This explanation, while not completely expected, is plausible. Consider that Thomas International (2015) propose that in order for an employee to be engaged seven aspects (e.g. freedom, recognition, growth, togetherness etc.) need to be in place. Other models of employee engagement (e.g. Aon Hewitt Employee Engagement Model) suggest that the drivers of employee engagement, outside of the work itself, include aspects such as an organisation's brand, leadership, performance, company

practices and basic aspects such as job security and benefits. Similarly, Saks (2006) noted that job characteristics predicted job engagement while procedural justice predicted organisation engagement. These are all indicators that a number of elements play a role in influencing employee engagement. Therefore, when it comes to CSE perhaps the impact is also most prominent when the construct is considered in totality.

In terms of OCB, the result from the multiple regression analysis conducted was uninspiring. The result suggested that a modest 10.5% of the change in OCB was explained by CSE. The result was not surprising given the result found for employee engagement (i.e. more than double the change was explained). The primary observation regarding how OCB interacts with CSE was that it is very difficult to predict relationship strength. It was believed that relationship strength would depend on the OCB and CSE subconstructs involved. If the two constructs were viewed in aggregate form, as they were for the correlation, there would likely be a weak relationship because of the possible tension between the two constructs at a more granular level (e.g. reward and altruism; reward and civic virtue etc.). It was also argued that the direction of relationship would likely be positive.

The multiple regression analysis yielded no statistically significant results. Where this was surprising for employee engagement it was not for OCB. This is because the general predictive power of 10.5% seen in the model summary indicated CSE did not affect a large amount of change in OCB. With that understanding, it was clear that even if one of the CSE predictor variables explained most of that change, it was unlikely it would be strong enough to demonstrate statistical significance. The OCB construct, specifically in relation to CSE, did not seem to have a strong direct relationship when the correlation and multiple regression results were considered together. A possible reason for this was the nature of the OCB construct and the kind of antecedents required to activate it meaningfully.

The nature of OCB means that, much like employee engagement, it has a number of specific antecedents. Some of them include job satisfaction, organisational commitment, employee engagement and role (Mahembe & Englebrecht, 2014). As a result, when considered in the context of a direct interaction with CSE, important preconditions which CSE does not necessarily enable directly are visibly absent. As a result, it becomes plausible that the direct interaction between CSE and OCB could be weak. It seemed clear that the only sensible way CSE and OCB could interact in a statistically meaningful way was through an intermediary variable that could positively affect interactions between the two. Therefore, while the result

was not statistically significant, it made sense from a theoretical perspective why this was the case.

The few empirical studies found on OCB and some of the basic building blocks of CSE also supported this view. For instance, Oo, Jung and Park (2018) found a positive relationship between OCB and CSR when that relationship was mediated by organisational pride. They also found that the relationship between the two was moderated by collectivist orientation and person-environment fit. Ong et al (2018) found that individual characteristics play a moderating role in the relationship between OCB and CSR. Abdullah and Rashid (2012) found that affective organisational commitment mediated the relationship between CSR and OCB. Yongqiang and Wei (2017) noted similar positive associations with OCBs as well. Donghwan, Jichul and JungHoon (2016) found organisational trust and commitment to be key mediators of the relationship between OCBs and CSR. Yongqiang and Wei (2017) noted that ethical leadership and organisational justice were key moderators when analysing the two variables as well. The only other study found in relation to OCB and corporate entrepreneurship actually found that CSR has a positive effect on OCB if that relationship is moderated by corporate entrepreneurship (Luu, 2017).

Considering all the theoretical and empirical evidence available, the result for this particular analysis made sense. What is more, it seemed sensible that any kind of positive relationship between CSE and OCB would likely occur through an intermediary variable. Indeed, the SEM conducted in the form of a path analysis, which is discussed shortly, confirmed this. Before that a discussion on the result for the multiple linear regression for CSE and job satisfaction is provided.

The multiple linear regression model for CSE and job satisfaction as the dependent variable, suggested that 23% of the change in job satisfaction was explained by CSE. In addition, there was a statistically significant result obtained that indicated CSE leadership predicted job satisfaction. It is important to make sense of the results theoretically and empirically.

Theoretically, job satisfaction can be linked to most organisational effectiveness variables in some shape or form. Whether as an antecedent or a consequence, its nature, popularity and perceived importance all mean that any sort of tangible link made with it is in some way important (Sen, 2008). As stated in the literature review, it was for a long time seen as one of the most important aspects organisations needed to strive for to have a strong and competitive workforce. In the context of CSE leadership in particular there are a number of clear

theoretical links that can be made. Firstly, if one accepts, as is commonly held, that employees look to leadership for a vision and something to work toward, it becomes apparent that a significant amount of satisfaction about their work will stem from the extent to which they understand, believe in and achieve the goals set in order to make the vision a reality. In the context of CSE leadership this is certainly present and perhaps even more compelling. That is because CSE leadership is largely about setting out an ambition to achieve confluence between social impact and economic value that redefines the very manner in which an organisation works. In essence, it is about transformational leadership that is driven by a conviction to achieve social change (Austin & Reficco, 2009). That is the kind of leadership specific to CSE and which might engender or strengthen job satisfaction in employees.

The idea that individuals do not, in the main, leave organisations but actually leave their managers (Robbins et al, 2003), is another way of highlighting the importance of CSE leadership to any individual's level of job satisfaction. It is conceptually clear that in a scenario where the team atmosphere is not positive, for whatever reason, the leaders contribute substantially to the general disposition of employees with regard to a number of organisational effectiveness variables (e.g. employee engagement, organisational commitment etc.) (Cherry, 2019; Saks, 2006). Where they are seen to be the cause of an unpleasant or uninspiring working experience, this can contribute directly to the employee's sense of engagement and satisfaction (Kahn, 1990; Saks, 2006). So a significant relationship between CSE leadership and job satisfaction is sensible in that respect.

The empirical data is supportive of this view in the broad context of how leadership and leadership styles influence job satisfaction among other things. Yusuf (2018) found this association when analysing the impact of leadership and employee ability and on job satisfaction. Morsiani, Bagnasco and Sasso (2017) assessed staff perceptions of leadership style and the impact these had on job satisfaction. The results, in what was a mixed methods study, indicated again that leadership is an important contributor to job satisfaction. In contrast, Velez and Nevez (2017) found that the effects of abusive supervision had unsurprisingly negative consequences in the context of both perceptions of distributive justice and job satisfaction. Applying a social cognitive lens to the concept, Tu, Lu and Yu (2017) found that a positive relationship does exist between supervisors' ethical leadership and employee job satisfaction. Further, they found that the relationship was partially mediated by supervisors' sense of moral awareness and moral identity. So when employees see strong

moral and ethical characteristics in their leaders, it is likely those qualities will contribute meaningfully toward a sense of job satisfaction for them. The research referred to at least makes it clear that a positive association between leadership and job satisfaction is sensible. This would imply that the result obtained for CSE leadership and job satisfaction makes sense.

What is also interesting about the findings of the multiple linear regression analysis is that they align really well with the findings by Vlachos, Panagopoulos and Rapp (2008) earlier discussed when looking at the relationship between job satisfaction and CSR. To recap, their study found that the relationship between CSR and job satisfaction was positive and that where the leadership style was charismatic, this was even more the case. It is then completely sensible to see a significant predictive relationship where CSE leadership and job satisfaction are concerned. The way in which CSE leadership is articulated could to a large degree, be described as charismatic, ethical and transformational all at once. In that sense a statistically significant result does make sense.

The discussion on the results of the multiple linear regression models conducted for CSE and the organisational effectiveness constructs can be summarised as follows. When considering all of the organisational effectiveness constructs, only job satisfaction showed itself to be statistically significant in relation to CSE leadership. Beyond that, the research found non-significant results. The clear message from these results is that CSE seems to gel well with these organisational effectiveness measures on a broad scale (i.e. correlations), but once one drills down into the specifics, the level of complexity from a predictive and explanatory perspective increases substantially and the effects of CSE are diluted to an extent that makes them statistically weak. The results of the final research question of the study are now discussed.

**Research question 2: Can structural equation modelling optimally explain the way the organisational effectiveness variables are influenced by CSE?**

The last research question of the study aimed to determine if there was an optimal way of explaining the interactions between CSE and the organisational effectiveness variables using a form of SEM. A type of SEM called path analysis was used to test different variable sequence combinations. Doing so assisted the researcher to determine the most optimal model possible, if any, for CSE and the organisational effectiveness variables.

Four scenarios were tested for model coherence largely based on a combination of theoretical assumptions and the results of the correlation and multiple linear regression analyses.

**Figure 16: Diagram of path analyses**

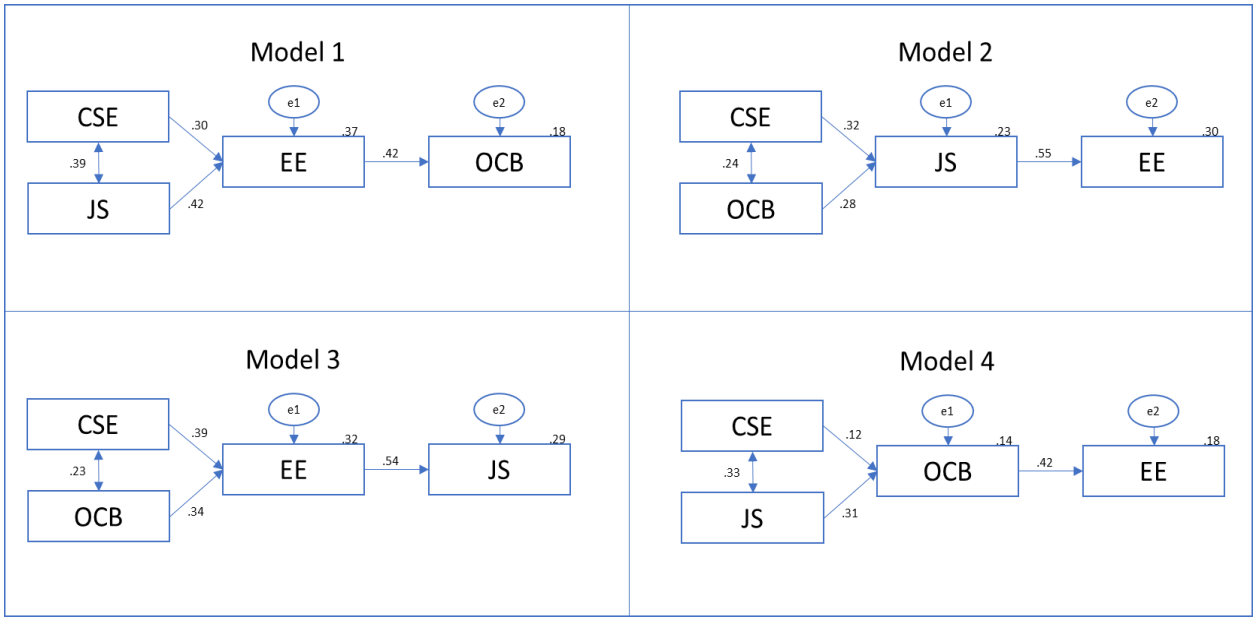


The first model mapped out a relationship between CSE and job satisfaction as the exogenous variables, employee engagement as the mediating variable and OCB as the outcome variable. The thought process behind this path mapping was that CSE and job satisfaction have a strong relationship that would, represented in combination, affect the extent to which employee engagement was experienced which would in turn affect OCBs. This model, the first of four that were tested, proved to be statistically viable from a structural equation model perspective as it satisfied all of the key requirements from a model fit perspective. The other three (see Model fit indices table 18) demonstrated poor model fits. Given this outcome, the viable model was the one the research chose to focus on.

In trying to make sense of the viable model, as that is the focus of the research question, a couple of things are clear. The interactions seen between job satisfaction and CSE for both the correlation and regression analyses suggested that in the context of a path analysis, they would likely work better if made to interact directly with one another at the beginning of a path. Of the three organisational effectiveness variables, job satisfaction seemed best placed at the beginning of any chain, mostly for theoretical reasons. It also seemed clear that employee engagement showed the most favourable characteristics for being the 'enabling' variable as has been found by a number of researchers (Kataria, Garg & Rastogi, 2013; Saks, 2006). It was also clear from the theoretical and empirical work found in the domains of CSR and CE that OCB showed the best characteristics for being the outcome variable at the end of the path chain. So the viability of the model was a validation of theory, research and findings of analyses of the current study.

For this particular analysis the study was concerned with understanding the influence of CSE on the organisational effectiveness variables. As a result, it was logical to have CSE as an exogenous variable. The important question was where the organisational effectiveness variables would feature in the path sequence. From that perspective, in theoretical and empirical terms job satisfaction seemed like the most sensible second exogenous variable as it has been seen as a key driver of engagement (Garg, Dar & Mishra, 2017; Thomas, 2009). That is, because the construct was historically seen as one of the most important outcome variables in the field of organisational psychology (Dormann & Zapf, 2001; Fahr, 2011; Sen, 2008) it was studied in the context of work motivation theories. As a result, questions regarding what influences the extent to which an individual was satisfied with their job were understood in terms of how well basic aspects that motivated them were taken care of (Dormann & Zapf, 2001). Considering this, elements that would be viewed as hygiene factors were deemed as crucial influencers of job satisfaction (Dormann & Zapf, 2001; Fahr, 2011; Sen, 2008). Things like job security, good remuneration and benefits and tools to fulfil one's work tasks are examples. So if this characterisation of the underlying drivers of job satisfaction is considered, the idea of job satisfaction being the other exogenous variable in the model becomes clear (Garg, Dar & Mishra, 2017; Thomas, 2009).

The mediating variable favoured was employee engagement. There were a number of reasons for this. Firstly, as listed earlier in the discussion, was the nature and number antecedents that are considered important if one wants to activate engagement (e.g. leadership, job

satisfaction, role, company practices etc.). These, elements not only aligned with the idea of CSE being a requirement for employee engagement through concepts like leadership and company practices, they also supported the view that job satisfaction was a condition for engagement. Secondly, was the nature of the construct itself. In order to bring your full self and be totally present at work it seems sensible that certain important things need to be functioning. You need to believe in what you are doing and be excited by it; you need to believe in the direction your organisation is going; you need to buy into the culture and ways of working that define your organisation; and you need to feel like you a fairly rewarded (or will be) for your contribution. Taking this into account further strengthened the researcher's belief that CSE in particular, is adequately equipped to meet these requirements. The last reason employee engagement was viewed as the best mediator was the outcome variable for this particular path. The construct of OCB had repeatedly shown itself, as demonstrated by the empirical research mentioned earlier, to be predisposed to being activated positively through mediation or moderation. This last reason explains not only why engagement was the most suitable intermediary variable, but also why OCB was the most suitable outcome variable.

The model then, suggests that in order to increase the likelihood of seeing OCBs, many of the elements of CSE need to be in place. This would imply that engagement is likely to be strong if CSE leadership is transformational, the values, mission and rewards of the organisation are aligned to blended value creation, collaboration between departments and with other organisations is not uncommon, and there are CSIntrapreneurs who champion the objectives. It is also important that employees are satisfied with their jobs which, for this study, broadly means their basic needs are taken care of and they start from a psychological position of being content with those fundamental conditions. If both CSE and job satisfaction are reasonably strong, employees are more likely to be engaged both in their jobs as well as the organisation level. And if they are sufficiently engaged, they are likely be more inclined to demonstrate behaviours that are consistent with those listed as OCBs. This explanation of the model was not only plausible but probable.

It is important to pause here and make an important point on what kind of conclusions this sort of analysis allows one to draw. While path analysis provides a very powerful method of assessing the manner in which variables interact in sequential, causal chains, it cannot determine the actual direction of the causal chain(s) hypothesised (Kline, 2011). So, the

strength of the argument of a possible and plausible casual sequence between variables cannot be justified by the statistical outputs of the path analysis. Well-formed theoretical hypotheses need to ground the argument along with an experimental research design. The statistical outputs, in the absence of an experimental design, could be seen to simply provide context. This "well-formed" theoretical view is not only a function of a single persuasive argument but a combination of a number of different arguments from various pieces of research on the topic.

Model one therefore represents the optimal explanation of how CSE influences the organisational effectiveness variables and provides a plausible answer for the final research question of the thesis. This brings to an end the discussion of the results of the research study. In concluding the thesis reflections on the practical and theoretical implications of the research, its key strengths and limitations, and directions for future research are presented.

### 8.4.2 Practical and theoretical implications

The current study's findings are best understood in the context of the phase they emanate. The findings of the first phase represent a significant milestone for the concept of CSE. They indicated that a scale that is statistically viable from a reliability, content and construct validity had been created. The reliability of the instrument at both the aggregated scale level as well as the subconstruct or subscale level was generally strong and suggested that a good level of internal consistency exists at the various levels of measurement.

The rigour applied in assessing scale reliability, using both the Cronbach Alpha and the Lambda indices, meant that the results, as they presented from the output data, could be relied upon with a reasonable degree of confidence. The content validity was determined by engaging subject matter experts in both the corporate and academic fields. This allowed for a number of diverse professionals to critique the scale, informed by different experiences. They provided important feedback on the initial instrument items and this allows for further instrument refinement. Following that process, the scale's construct validity was determined using both exploratory and confirmatory factor analysis. The results in both instances were more than acceptable, particularly for an exploratory endeavour. The outcome is really all the more remarkable when one considers that the scale was based on a concept paper.

The first thing to acknowledge is that the first phase of the study was absolutely pivotal in the broader context of the study. Had the results been less favourable, it is likely the study would

have had to proceed in a substantively different way. In that sense, the first practical implication of the study was the direct result of a satisfactory outcome to phase one. That is, at the end of phase one a CSE scale had emerged that was reliable and valid. This meant there is a preliminary way to meaningfully measure CSE in a quantitative manner. It also meant that CSE could be measured in relation to other key constructs that exist in a quantitative form. In this study, those were the selected organisational effectiveness constructs.

This result, from a theoretical perspective, was quite significant as well. In essence, the instrument being viable in statistical terms based on how it was conceptualised (particularly at the confirmatory factor analysis stage) meant that not only was the interpretation of the theory sensible, but that the theory seemed to hold up once translated into a psychometric instrument designed to operationalise it. Therefore, the second implication, of a theoretical nature, was that the CSE construct seemed to translate well into a measuring instrument.

The third implication of the first phase of the study is that, in broad terms, it has laid some important groundwork for research in the domain of not just CSE but corporate social responsibility and sustainable development as well. They have effectively provided another distinct lens through which to explore the important concepts of double value creation, triple-bottom line, blended value and sustainability. More so in fact if one accepts that CSE, as it is described in this study, provides a framework for innovation that meets the needs of sustainable development. If this is the case then something more significant occurred during the first phase because there is now a way, preliminary as it may be, of measuring the extent to which various components of CSE are experienced in organisations. This implication is the most significant if it is accepted that CSE, as conceptualised here, provides an opportunity to instil a certain type of innovation into the DNA of an organisation.

The second phase findings demonstrated that there are positive and significant relationships between CSE and employee engagement, organisational citizenship behaviour and job satisfaction. For the organisational effectiveness constructs this means they are involved in another layer of literature that was not explored prior, which enriches our understanding of them and what other elements they could possibly be influenced by. What these results do, is add data richness, a different perspective, and in the process, an enhanced understanding of the organisation effectiveness constructs. This is an important contribution and implication from a theoretical and knowledge contribution perspective. Indeed, the scope of ambition applied to this study was, as some reviewers during the proposal stage had suggested,

unusually risky given the genuinely ground-up approach taken. That in itself would suggest that the contribution of the work, in so far as theoretical and practical implications are concerned, is meaningful.

The results obtained for the multiple linear regression analyses were also useful. They indicated that from a predictive perspective, the whole is greater than the sum of the parts. This, of course, applied where employee engagement and job satisfaction were concerned. With regard to OCB, the clearest implication was that OCB is a variable that continues to be highly predisposed to requiring an intermediary variable if it is to be meaningfully activated. The one significant finding from a predictive perspective was for CSE leadership and job satisfaction. This once again highlights the important role leaders play in how their employees experience the workplace.

Finally, with regards to the findings of the structural equation modelling, a clearer understanding of the manner in which the organisational effectiveness variables interacted with CSE and each other was the main benefit. The path analyses suggested quite clearly that OCB operated optimally at a particular part of the path sequence, as did employee engagement and job satisfaction. On a practical level, the findings are useful for both practitioners and the academic domain in terms of areas that can be further explored, validated or challenged. The findings provide an opportunity for practitioners to operationalise aspects of CSE in their quest to make the workplace more engaging for employees. For instance, there is a clear opportunity to strengthen the leadership development framework to align more closely with the principles of CSE. Doing so assists current organisational leaders by equipping them with a way of leading that can be inspiring and motivating. It can also institutionalise the principles of shared value creation in the future leaders of the organisation. There are many other practical implications including how recognition and rewards can be reimagined and how substantive change can be driven from within. It seems clear that the findings give confidence that CSE provides an opportunity for meaning and value creation to be approached in a different way that has numerous benefits for a wide stakeholder group.

Thus, the practical and theoretical implications for the study are clear. The implications, as they relate to the development of the concept of CSE and the organisational effectiveness variables analysed by the current study, are largely theoretical. There are, however, some practical implications in that the findings could help organisations looking to be more

innovative in developing sustainable solutions. In that context, CSE is a potentially powerful tool. Once its inherent potential is integrated with knowledge regarding how it interacts with other important organisational effectiveness and behaviour constructs, it will become even clearer just how important the construct can become.

### 8.4.3 Limitations and directions for future research

The research has a number of limitations that flow directly to what future research endeavours could consider pursuing. First, the scale developed needs to be tested again in a number of respects. From a content validity perspective, it is possible the CSE scale can be further shortened and there is an opportunity to investigate that. Second, the construct validity of the scale needs to be tested again to see if it produces similar results to those found in the current study. Similarly, the reliability analysis also needs to be tested again. In terms of the scale's validity there are other important forms of validity that were not assessed by the current study (e.g. criterion validity). Finding a way to assess these would enhance the strength of the scale and make it a more effective tool. So there is an opportunity to do more in terms of validity testing. A mixed methods approach, for instance, measuring the scale outputs against how an organisation or organisations fare in a sustainability or green innovation ranking exercise that is conducted by an independent and credible party could be useful for predictive validity or even concurrent validity (Kline, 2011).

Sample size for both phases of the study was one of the major challenges. Unfortunately, the reality is that in both phases of the study, significant problems were experienced in getting the desired number of participants and as a result, particularly for the second phase, sub-optimal participant numbers were experienced. In terms of what that meant for the SEM conducted, while reasonably robust, a sample below 200 was not ideal (Kline, 2011).The sample sizes obtained for the current study in both phases could have been larger. There is an opportunity then to do a repeat study with a larger sample. A study with a larger sample than was achieved for the current study would provide greater comfort as far as the statistical accuracy of the results is concerned. Without seeming defensive, there is a long history of literature and studies that have added value to knowledge creation without necessarily fully honouring some of the statistical requirements (Howell, 2010). The current work falls into that category. There is, however, a clear need to conduct a study that is stronger on methodological components such as sample size.

The sample strategy for the current study, while purposive, was quite broad. Perhaps testing the scale using different sample profiles (e.g. managers, administrators) may provide more specific insights regarding how CSE is viewed by those specific samples.

Another opportunity worth considering is that of conducting the research in an entirely different cultural environment to try and see what the differences really are and what that could help us learn about scale integrity and suitability across different contexts, as well as the concept of CSE itself.

In terms of the second phase, an opportunity exists to test CSE against other salient variables that may not necessarily speak to internal organisational functioning (e.g. innovation, renewable energy orientation, socio-economic impact etc.) to see what other insights could be gained. There is also an opportunity to test the same variables with greater rigour at a subscale level.

From a research design perspective, the current study was correlational in nature which means the results of the study cannot in any way infer causality. A longitudinal design for the CSE construct would be useful in future research.

There is perhaps, a more fundamental piece of work that could be done regarding the true alignment of CSE and CSR. It is assumed that the two constructs are aligned or that one is a logical progression from the other. However, it is not clear if this has actually been established empirically. There seem to be some important differences that could mean the two constructs are distinct, in part or fully. The fact that CSR is itself laced with inconsistencies and differences would suggest that the lack of internal harmony makes alignment with CSE a little trickier than simply aligning definitions. In real world terms, the differences may be substantial enough to merit a clear assessment of the true alignment of these constructs.

In a similar vein, there has been work done by Kuratko, McMullen, Hornsby & Jackson (2017) regarding the development of what they term a social corporate entrepreneurship scale (SCES) that attempts to measure the extent to which an organisation is configured toward the creation of social value. That is, the scale is intended to “measure organisational antecedents for social corporate entrepreneurship and offers managers an opportunity to analyze whether the perceived environment is supportive of corporate entrepreneurial behaviours intended to

create social as well as financial value" (Kuratko et al, p. 271, 2017). It would seem the current study's effort to develop a CSE scale ran concurrently with the development of the SCES. Future research could compare these scales in terms of reliability, content and predictive validity allowing the stronger scale (or some combination of the two scales) to emerge, which could only strengthen the robustness of any further research in this area.

In terms of limitations as they relate to the lack of previous research and literature on CSE, the current study was significantly hampered. There is not a great deal of literature or empirical studies on CSE. This limitation had direct implications for the scope and depth of the discussion. It also affected the literature review as the manner in which hypotheses were formulated was substantiated, in part, by inferential work. That is, CSR in conjunction with corporate entrepreneurship, together formed the proxy for CSE. As a result, studies on those concepts were sought to determine what the likely relationship would be for CSE with the organisational effectiveness variables. So the literature review as well as the discussion chapters were limited because of the lack of prior research. The best way to address these particular challenges is for more research to be done on CSE. Possibilities have been outlined in that regard.

Thus, the study has a number of limitations pertaining to aspects of the research design, sample size, the depth of the literature review and discussion. All of these issues present future research opportunities that, if pursued, would ensure the field continues to grow.

### 8.4.4 Conclusion

The current study was able to produce a statistically coherent CSE scale that provided a clear platform for exploring the construct's impact on established organisational effectiveness variables. In exploring this impact, the proposed hypotheses were confirmed as accurate, certain predictor variables were identified and an optimal path analysis was determined. The study, in achieving the first milestone of creating a viable scale, has contributed to knowledge development both in theory and practice in that it has helped strengthen the argument for CSE through empirical statistical rigour and has also provided an instrument that can be refined and used in the real world to test the extent to which CSE behaviour is being conducted by organisations. In executing the second phase, the study has also provided novel insights. Important insights regarding how CSE can impact employee engagement, job satisfaction and organisational citizenship behaviour have been gained.

In a world that is starting to acknowledge the reality of finite resources, increasing demand for those resources and the important role organisations of all kinds must play in ensuring those resources are responsibly utilised and replenished where possible, finding ways of accelerating the ability of organisations to do so is important. The current research, in executing the two phases it set out to, has provided a platform through which to measure, evaluate and improve the effectiveness of the structures that would enable organisations to achieve blended value. Therefore, the contribution of the current study to knowledge creation and development is seen as novel, seminal and of practical value in an area that has at its core, the sustainability of the planet.

**Reference list**


Abdullah, M. H., & Rashid, N. R. (2012). The Implementation of Corporate Social Responsibility (CSR) Programs and its Impact on Employee Organizational Citizenship Behavior. *International Journal of Business and Commerce,* 2, 67-75

Adonisi, M. (2003). *The Relationship between Corporate Entrepreneurship, Market Orientation, Organisational Flexibility and Job Satisfaction* [Doctoral dissertation, University of Arizona]. University of Pretoria Repository. https://repository.up.ac.za/bitstream/handle/2263/29788/thesis.pdf?sequence=1

Aguinis, H., & Glavas, A. (2012). What We Know and Don't Know About Corporate Social Responsibility: A Review and Research Agenda. Journal of Management, 38, 932. https://doi.org/10.1177%2F0149206311436079

Akehurst, G., Comeche, J.M. & Galindo, M. (2009). Job satisfaction and commitment in the entrepreneurial SME. *Small Business Economics,* 32, 277-289.

Albdour, A. A., & I, B. Altarawneh (2012). Corporate Social Responsibility and Employee Engagement in Jordan. *International Journal of Business and Management,* 7, 89 – 105.

Ali, I., Rehman, K. U., Ali, S. I., Yousaf, J., & Zia, M. (2010). Corporate social responsibility influences, employee commitment and organisational performance. *African Journal of Business Management*, 4, 2796 - 2801

Altwegg, D., Roth, I., & Scheller, A. (2004). Monitoring sustainable development (MONET): final report – methods and results. Swiss Federal Statistical Office: Neuchâtel.

Andrew, O. C., & Sofian, S. (2012). Individual factors and work outcomes of employee engagement. *Procedia – Social and Behavioural Sciences,* 40, 498–508.

Anitha, J. (2014). Determinants of employee engagement and their impact on employee performance. International Journal of Productivity and Performance, 63, 308 – 323. https://doi.org/10.1108/ijppm-01-2013-0008

Antoncic, A. J., & Antoncic, B. (2011). Employee satisfaction, intrapreneurship and firm growth: a model". *Industrial Management & Data Systems*, 111, 589-607. https://doi.org/10.1108/02635571111133560

Austin, J.E., Herman B.L., & Quinn, J. (2004). *Timberland: Commerce and Justice*. Teaching Case 9- 305-002, Harvard Business School, Division of Research, Boston.

Austin, J.E., Herman B.L., & Quinn, J. (2006). *Timberland: Commerce and Justice*. Teaching Note 306-089, Harvard Business School, Division of Research, Boston.

Austin, J.E., Jane. W., & Grendron, A. (2004). *Starbucks and Conservation International*. Teaching Note 304-100, Harvard Business School, Division of Research, Boston.

Austin, J.E., & Reavis, C. (2002). *Starbucks and Conservation International*. Teaching Case 303-055, Harvard Business School, Division of Research, Boston.

Austin, J., & Reficco, E. (2009). *Corporate Social Entrepreneurship*. Working Paper.

Bahl, P. (2017). Can CSR boost employee engagement? *People Matters*. https://www.peoplematters.in/article/employee-engagement/can-csr-boost-employee-engagement-16463

Barnett, H. J., & Morse, C. (1963). Scarcity and Growth The Economics of Natural Resource Availability. The johns Hopkins University Press.

Barnett, M. L., Jermier, J. M., & Lafferty, B. A. (2006). Corporate Reputation: The Definitional Landscape. Corporate Reputation Review, 9, Available at SSRN: https://ssrn.com/abstract=868492

Bartikowski, B., Walsh, G., & Beatty, S.E. (2011). Culture and age as moderators in the corporate reputation and loyalty relationship. *Journal of Business Research*, 64, 966-972.

Bateman, T.S. and Organ, D.W. (1983). Job satisfaction and the good soldier: the relationship between affect and employee 'citizenship. *Academy of Management Journal*, 26, 587-595.

Becton, B. J., Giles, F. W., & Schraeder, M. (2008). Evaluating and rewarding OCBs: Potential consequences of formally incorporating organisational citizenship behaviour in performance appraisal and reward systems. *Employee Relations*, 30, 494-514.

Bentler, P. M., & Chou, C. P. (1987). Practical issues in structural modeling. *Sociological Methods & Research, 16*(1), 78-117.

Berns, M., Townend, A., Khayat, Z., Balagopal, B.M., Reeves. M., Hopkins, M., & Kruschwitz, N. (2009). *The Business of Sustainability Imperatives, Advantages and Actions*. The Boston Consulting Group. Retrieved from https://www.bcg.com/documents/file29480.pdf

Bhatnagar, J., & Biswas, S. (2010). Predictors and Outcomes of Employee Engagement: Implications for the Resource-based View Perspective. *Indian Journal of Industrial Relations*, 46, 273–286

Bhattacharya, C. B., & Sen, S. (2004). Doing Better at Doing Good: When, Why, and How Consumers Respond to Corporate Social Initiatives. *California Management Review*, 47(1), 9–24. https://doi.org/10.2307/41166284

Bolino, M.C, Klotz., A., Turnley, W.H & Harvey, J (2013). Exploring the Dark Side of Organizational Citizenship Behavior. *Journal of Organizational Behavior*. 34. https://doi.org/10.1002/job.1847

Bolino M.C., Turnley W.H., Bloodgood J.M., (2002) Citizenship behaviour and the creation of social capital in organisations. *Academy of Management Review,* 27, 505-522.

Bonini, S., & Gorner. S. (2011). *The Business of sustainability: Putting it into practice*. Mckinsey & Company. Retrieved from www.mckinsey.com/~/.../Sustainability/PDFs/Putting_it_into_practice.ashx

Bornstein, D. (2004) How to Change the World: Social Entrepreneurs and the Power of New Ideas. Oxford University Press.

Boschee, J. (1998). What does it take to be a social entrepreneur? National Centre for Social Entrepreneurs. Available: http://www.socialentrepreneurs.org/what-does.html.

Boserup, E. (2017). *The Conditions of Agricultural Growth: The Economics of Agrarian Change Under Population Pressure*. Routledge.

Bradley, D. B. (2014). Do companies understand what employees want from their social engagement experience? 2nd World Conference on Business, Economics and Management (WCBEM 2013). *Social and Behavioural Sciences,* 109, 531 – 535.

Brammer, S., Jackson, G., & Matten, D. (2012). Corporate social responsibility and institutional theory: new perspectives on private governance. *Socio-Economic Review, 10,* 3-28. https://doi.org/10.1093/ser/mwr030

Braun, S., Wesche, J., Frey, D., Weisweiler, S., & Peus, C. (2012). Effectiveness of Mission Statements in Organizations. A Review. *Journal of Management and Organization,* 18, 430-444. 10.5172/jmo.2012.18.4.430.

Brundlandt, G.H. (1987). *Our Common Future. Report of the World Commission on Environment and Development*. Oxford University Press.

Bruton, G., Ahlstrom, D., & Li, H. (2010). Institutional theory and entrepreneurship: where are we now and where do we need to move in the future? *Entrepreneurship Theory and Practice*, 421–440. https://doi.org/10.1111%2Fj.1540-6520.2010.00390.x

Campbell, J, L. (2007). Why would corporations act in socially responsible ways? An institutional theory of corporate social entrepreneurship. *Academy of Management Review*, 42, 946 – 967.

Carroll, A. B. (1979). A three-dimensional conceptual model of corporate performance. *Academy of Management Review*, 4, 497-505.

Carroll, A. B. (1983, July 15). Corporate social responsibility: Will industry respond to cutbacks in social program funding? *Vital Speeches of the Day*, 49, 604-608.

Carroll, A. B. (1999). Corporate social responsibility. *Business & Society*, 38, 268-295.

Carroll, A.B. (2006). *Corporate Social Responsibility: A Historical Perspective. In The Accountable Corporation. Volume 3: Corporate Social Responsibility*, edited by M. Epstein and K. Hanson. Westport, CT: Praeger.

Chaudhary, R. (2017) "Corporate social responsibility and employee engagement: can CSR help in redressing the engagement gap?". *Social Responsibility Journal,* 13, 323 - 338. https://doi.org/10.1108/SRJ-07-2016-0115

Cherry, K. (2019). The Eight Major Theories of Leadership. Retrieved from the World Wide Web at https://www.verywellmind.com/leadership-theories-2795323

Choi, Y., & Yu, Y. (2014). The influence of perceived corporate sustainability practices on employees and organisational performance. *Sustainability*, 6, 348-364.

Corbett, A., Covin, J.G., O'Connor, G.C. and Tucci, C.L. (2013), Corporate Entrepreneurship Future Agenda. *The Journal of Production Innovation Management*, 30, 812-820. doi:10.1111/jpim.12031

Costello, A, B., & Osborne, J. W. (2005). *Best practices in exploratory factor analysis: Four recommendations for getting the most from your analysis*. Practical Assessment, Research and Evaluation, 10, 1–9.

Covin, J.C., & Miles, M.P. (1999). Corporate Entrepreneurship and the Pursuit of Competitive Advantage. *Entrepreneurship Theory and Practice*, 23, 47-63.

Crook, C. (2005). *Special Report on Corporate Social Responsibility*. The Economist, Jan 20th.

Davis, K. (1960). Can business afford to ignore social responsibilities? California Management Review, 2, 70-76.

Dees, G. (1998). *The Meaning of 'Social Entrepreneurship.* Boston, MA: Harvard Business School. Comments and suggestions contributed from the Social Entrepreneurship Funders Working Group.

Dees, G. (2001). The Meaning of "Social Entrepreneurship". Unpublished

Dicke, C., Holwerda, J., & Kontakos, Anne-Marie. (2007). Employee engagement: what do we really know? what do we need to know to take action? CAHRS Graduate Research Assistants. Retrieved fromhttp://www.ilr.cornell.edu/cahrs/research/pubs/SpecialTopics/upload/EmployeeEngagementFinal.pdf

Dodd, E. M. (1932). For whom are corporate managers trustees? *Harvard Law Review*, 45, 1145-1163.

Donghwan, Y., Jichul, J., & JungHoon L. (2016). "Environmental management strategy and organizational citizenship behaviors in the hotel industry: The mediating role of organizational trust and commitment". *International Journal of Contemporary Hospitality Management*, 28, 1577-1597, https://doi.org/10.1108/IJCHM-10-2014-0498

Dormann, C., & Zapf, D. (2001). Job Satisfaction: A meta-analysis of stabilities. *Journal of Organisational Behaviour*, 22, 483-504.

Economist. (2009). Entrepreneurship. Retrieved from the www.economist.com/node/13565718

Elkington, J., & Hartigan, P. (2008). *The power of unreasonable people: how social entrepreneurs create markets that change the world*. Boston, Mass.: Harvard Business School Press.

Emerson, J. (2000). *The nature of returns: a social capital markets inquiry into elements of investment and the blended value proposition*. Working Paper, Division of Research, Harvard Business School, Boston, MA.

Epstein, M. (2018). *Making Sustainability Work - Best Practices in Managing and Measuring Corporate Social, Environmental and Economic Impacts*. Routledge.

Fahr, R. (2011). Job Design and Job Satisfaction: Empirical evidence for Germany? *Management Revue*, 22, 28-46.

Ferreira, P., & Oliveira, E. (2014) "Does corporate social responsibility impact on employee engagement?". *Journal of Workplace Learning*, 26, 232-247. https://doi.org/10.1108/JWL-09-2013-0070

Frederick, W. C. 1960. The growing concern over business responsibility. California Management Review, 2, 54-51.

Fu, H. F., Ye, H., & Law, R. (2014). You do well and I do well? The behavioral consequences of corporate social responsibility. *International Journal of Hospitality Management*, 40, 62-70.

Garg, K., Dar, I. A., & Mishra, M. (2018). Job Satisfaction and Work Engagement: A Study Using Private Sector Bank Managers. Advances in Developing Human Resources, 20, 58–71. https://doi.org/10.1177/1523422317742987

Harding, R. (2006). *Social Entrepreneurship Monitor.* London: Global Entrepreneurship Monitor

Hemingway, C. (2013). *Corporate Social Entrepreneurship: Integrity Within* (Business, Value Creation, and Society). Cambridge: Cambridge University Press. doi:10.1017/CBO9781139017527

Hinkin, T. R. (1995). A review of scale development practices in the study of organisations. *Journal of Management*, 21, 976-988.

Holliday, C. O., Schmidheiny, S., & Watts, P. (2002). *Walking the Talk: The Business Case for Sustainable Development*. London: Routledge.

Hoque, A. S. M., Gwadabe, U. M., & Rahman, M. A. (2017). Corporate entrepreneurship upshot on innovation performance: the mediation of employee engagement. *Journal of Humanities, Language, Culture and Business*, 1, 54-67.

Hornsby, J. S., Kuratko, D. F., & Zahra, S. A. (2002). Middle managers' perception of the internal environment for corporate entrepreneurship: Assessing a measurement scale. *Journal of Business Venturing*, 17, 253-273. https://doi.org/10.1016/S0883-9026(00)00059-8

Howell, D. C. (2010). *Statistical methods for psychology.* Belmont, CA: Thomson Wadsworth.

Huck, S. W. (2004). *Reading Statistics and Research (4th Ed.).* Boston: Pearson.

Jafari, P., & Bidarian, S. (2012). The relationship between organisational justice and organisational citizenship behaviour. *Procedia – Social and Behavioural Sciences*, 58, 924-933.

Kahn, W.A. (1990). Psychological conditions of personal engagement and disengagement at work. *Academy Management Journal*, 33, 692-724.

Kaneda, T., Greenbaum, C., & Patierno, K. (2018). PRB Projects 2.3 Billion More People Living on Earth by 2050. https://www.prb.org/2018-world-population-data-sheet-with-focus-on-changing-age-structures/

Kao, S., Ho, M., Wu, C., & Lee, T. (2009). Relationships between employees' perception of corporate social responsibility, personality, job satisfaction, and organisational commitment. Retrieved from http://bai2009.org/file/Papers/1224.doc

Kassa, A., & Raju, R. (2015), "Investigating the relationship between corporate entrepreneurship and employee engagement". *Journal of Entrepreneurship in Emerging Economies*, 7, 148-167. https://doi.org/10.1108/JEEE-12-2014-0046

Kataria, A., Pooja, G., & Rastogi, R. (2013). Employee engagement and organisational effectiveness: The role of organisational citizenship behaviour. *International Journal of Business Insights & Transformation*, 6, 102-113.

Kates, R. W., Parris, T.M., & Leiserowitz, A. A. (2005), "What is Sustainable Development? Goals, indicators, values, and practice". *Science and Policy for Sustainable Development*, 47, 8-21

Kerlinger, F. N., & Lee, H. B. (2000). *Foundations of Behavioural Research (4th ed)*. Sydney: Harcourt College Publishers.

Kets De Vries, M.F.R. (1977). The entrepreneurial personality: A person at the crossroads. *Journal of Management Studies*, 14, 34-57.

Khaleel, M., Chelliah, S., Rauf, S., & Jamil, M. (2017). Impact of perceived corporate social responsibility on attitudes and behaviors of pharmacists working in MNCs. *Humanomics*, 33, 453-469. https://doi.org/10.1108/H-10-2016-0080

Kline, R.B. (2011). *Principles and practice of structural equation modeling (3rd edition).* New York: The Guilford Press.

Kuratko, D. F. (2005). The Emergence of Entrepreneurship Education: Development, Trends, and Challenges. *Entrepreneurship Theory and Practice*, 29, 577–597. https://doi.org/10.1111/j.1540-6520.2005.00099.x

Kuratko, D. F., Hornsby, J. S., & Bishop, J. W. (2005). Managers' Corporate Entrepreneurial Actions and Job Satisfaction. *International Entrepreneurship and Management Journal, 1*, 275–291. https://doi.org/10.1007/s11365-005-2589-1

Kuratko, D. F., Hornsby, J. S., & Covin, J. G. (2014). Diagnose a firm's internal environment for corporate entrepreneurship. *Business Horizons, 57, 37-47.*

Kuratko, D. F., McMullen, J. S., Hornsby, J. S., & Jackson, C. (2017). *Is your organization conducive to the continuous creation of social value? Toward a social corporate entrepreneurship scale*. Business Horizons. 10.1016/j.bushor.2016.12.003.

Le Blanc, D. (2015). Towards Integration at Last? The Sustainable Development Goals as a Network of Targets. *Sustainable Development*, 23,176–187. DOI:10.1002/sd.1582

Livi-Bacci, M. (2012). A Concise History of World Population (CHWP). Blackwell

Lozano, R. (2013), Are Companies Planning their Organisational Changes for Corporate Sustainability? An Analysis of Three Case Studies on Resistance to Change and their Strategies to Overcome it. *Corporate Social Responsibility Environment Management*. 20, 275-295. doi:10.1002/csr.1290

Luu, T. (2017) "CSR and organizational citizenship behavior for the environment in hotel industry: The moderating roles of corporate entrepreneurship and employee attachment style". *International Journal of Contemporary Hospitality Management*, 29, 2867-2900. https://doi.org/10.1108/IJCHM-02-2016-0080

Macey, W. H., & Schneider, B. (2008). The meaning of employee engagement. *Industrial and Organizational Psychology, 1, 3–30.*

Mahembe, B., & Engelbrecht, A.S. (2014). The relationship between servant leadership, organisational citizenship behaviour and team effectiveness. *SA Journal of Industrial Psychology, 40,* 1107-1117.

Mair, J., & Martí , I. (2004). *Social entrepreneurship: What are we talking about? A framework for future research*. Working Paper.

Maslach, C. & Leiter, M. P. (1997). *The truth about burnout. San Francisco,* CA: Jossey-Bass.

McClelland, D. C. (1961). *The Achieving Society.* University of Illinois at Urbana-Champaign's Academy for Entrepreneurial Leadership Historical Research Reference in Entrepreneurship. https://ssrn.com/abstract=1496181

McClelland, D.C. (1987), Characteristics of Successful Entrepreneurs*. *The Journal of Creative Behavior*, 21, 219-233. doi:10.1002/j.2162-6057.1987.tb00479.x

Meister, J. (2014). *Corporate Social Responsibility: A Lever For Employee Attraction & Engagement*; http://www.wrightpathstrategies.com/wp-content/uploads/2014/09/Forbes-Corporate-Social-Responsibility-A-Lever-For-Employee-Attraction-Engagement.pdf

Mone, E., Eisinger, C., Guggenheim, K., Price, B., & Stine, C. (2011). Performance Management at the Wheel: Driving employee engagement in organisations. *Journal of Business Psychology*, 26, 205-212.

Morsiani G, Bagnasco A, Sasso L. (2016) How staff nurses perceive the impact of nurse managers' leadership style in terms of job satisfaction: a mixed method study. *Journal of Nursing Management*, 5 doi: 10.1111/jonm.12448.

Mulgan, G., Tucker, S., Ali, R., & Sanders, B. (2007). *Social Innovation: What It Is, Why It Matters and How It Can Be Accelerated*.

Newman, A., Nielsen, I., & Miao, Q. (2014). The impact of employee perceptions of organizational corporate social responsibility practices on job performance and organizational citizenship behavior: evidence from the Chinese private sector. *The International Journal of Human Resource Management*, 26, 1226-1242, DOI: 10.1080/09585192.2014.934892

Nidumolu, R., Prahalad, C. K., and Rangaswami, M, R. (2009). *Why Sustainability is now the Key Driver of Innovation*. Boston: Harvard Business Review.

Ong, M., Mayer, D. M., Tost, L. P., & Wellman, N. (2018). When corporate social responsibility motivates employee citizenship behavior: The sensitizing role of task significance. *Organizational Behavior and Human Decision Processes*, 144, 44-59.

Oo. E.Y, Jung, H. & Park, I (2018). Psychological factors linking perceived CSR to OCB: The role of organisational pride, collectivism, and person-organisation fit. *Sustainability*, 1-16. https://doi.org/10.3390/su10072481

Organ, D.W. (1988). *Organizational Citizenship Behaviour: The Good Soldier Syndrome*. Lexington Books, Lexington, MA.

Organ, D. W. (1994). Personality and Organizational Citizenship Behavior. *Journal of Management*, 20, 465–478. https://doi.org/10.1177/014920639402000208

Podsakoff, P.M., & MacKenzie, S.B. (1994). An examination of the psychometric properties and nomological validity of some revised and reduced ‘substitutes for leadership’ scales. *Journal of Applied Psychology*, 79, 702–713.

Poston, D. L., & Bouvier. L. F. (2013). *Population and Society*. Cambridge University

Raihan, T. & Karim, R. (2017). *CSR AND EMPLOYEE JOB SATISFACTION*: A CASE FROM MNCS BANGLADESH. 5. 26-39.

Rettab, B., Brik, A. B., & Mellahi, K. (2009). A study of management perceptions of the impact of corporate social responsibility on organisational performance in emerging economies: the case of Dubai. *Journal of Business Ethics*, 89, 371-390. http://dx.doi.org/10.1007/s10551-008-0005-9

Robbins, S. P., Odendaal, A., & Roodt, G. (2003). *Organisational Behaviour: Global and Southern African Perspectives.* Pearson Education South Africa.

Roberts, J.V. (2006). *Employee engagement and commitment: A guide to understanding, measuring and increasing engagement in your organization*. US: SHRM Foundation.

Rosenthal, R., & Rosnow, R.L. (2008). *Essentials of behavioural research: Methods and data analysis (3rd edition)*. Boston: McGraw-Hill.

Rosseel, Y. (2012). Lavaan: An R Package for Structural Equation Modeling. *Journal of Statistical Software*, 48, 1–36.

Rothbard, N. P. (2001), "Enriching or depleting? The dynamics of engagement in work and family roles", *Administrative Science Quarterly*, 46, 655-84.

Saks, A. M. (2006). Antecedents and consequences of employee engagement. *Journal of Managerial Psychology*, 21, 600-619.

Saks, A. M., & Gruman, J. A. (2014). What do we really know about employee engagement. *Human Resource Development Quarterly*, 25, pp 155 – 182.

Santos, F. (2009). *A positive theory of social entrepreneurship*. Working Paper Series, INSEAD Fontainebleau, France.

Schaufeli, W., & Bakker, A. (2003). *Utrecht work engagement scale: Preliminary manual.* Utrecht: Occupational Health Psychology Unit, Utrecht University.

Schumpeter, J. A. (1947). The Creative Response in Economic History. *Journal of Economic History*, 7, 149-159.

Scott, W.R. (2007). *Institutions and organizations: Ideas and interests*. Thousand Oaks, CA: Sage

Scott, W. R., & Meyer, J. W. (1983). *The organisation of societal sectors*. In J. W. Meyer & W . R. Scott (Eds.), Organisational environments: Ritual and rationality (pp. 129 – 153). Beverly Hills, CA: SAGE.

Publications.

Sen, K. (2008). Relationship between Job Satisfaction and Job Stress amongst Teachers and Managers. *Indian Journal of Industrial Relations,* 44, 14-23.

Sheehy, B. (2015). "Defining CSR: Problems and Solutions" *Journal of Business Ethics,* 131, 625 – 648.

Sirota Survey Intelligence. (2007). *Workers satisfied with companies' social responsibility are more engaged and positive.* Retrieved from www.crmlearning.com

Slack, R., Corlett, Sandra., & Morris, R. (2014). Exploring Employee Engagement with (Corporate) Social Responsibility: A Social Exchange Perspective on Organisational Participation. *Journal of Business Ethics*. 127. 10.1007/s10551-014-2057-3.

Smidt, O., de Beer, L., Brink, L., & Leiter, M. (2016). The validation of a workplace incivility scale within the South African banking industry. *SA Journal of Industrial Psychology, 42*. doi: **https://doi.org/10.4102/sajip.v42i1.1316**

Smith, V. K. (2012) Scarcity and Growth Reconsidered. Routledge.

Spitzeck, H., Boechat, C., & Lea˜o, S. (2013). Sustainability as a driver for innovation – towards a model of corporate social entrepreneurship at Odebrecht in Brazil. *Corporate Governance, 13, 613-625.*

Story, J. S. & Castanheira, F. (2019). *Corporate social responsibility and employee performance: Mediation role of job satisfaction and affective commitment.* https://doi.org/10.1002/csr.1752

Sun, L., & Yu, T. (2015), "The impact of corporate social responsibility on employee performance and cost", *Review of Accounting and Finance*, 14, 262-284. https://doi.org/10.1108/RAF-03-2014-0025

Swan, G. E., & Lessov-Schlaggar, C. N. (2007). The effects of tobacco smoke and nicotine on cognition and the brain. *Neuropsychology review*, 17, 259 – 273.

Taber, T. D., & Alliger, G. M. (1995). 'A task-level assessment of job satisfaction'. *Journal of Organisational Behaviour*, 16, 101 - 121.

Thatcher, A. (2012). Early variability in the conceptualisation of 'sustainable development and human factors'. *Work*, 41, 3892-3899. 10.3233/WOR-2012-0058-3892.

Thatcher, A. (2014). *Human Factors In Organizational Design And Management* – Xi Nordic Ergonomics Society Annual Conference – 46. O. Broberg, N. Fallentin, P. Hasle, P.L. Jensen, A. Kabel, M.E. Larsen, T. Weller (Editors)

Thomas International. (2015). Employee Engagement: All you need to know. Retrieved from www.thomasinternational.net

Thomas, K. T. (2009). *Intrinsic Motivation at work: what really drive employee engagement*. Berrett-Koehler Publishers.

Thompson, J., Alvy, G. & Lees, A. (2000). Social entrepreneurship — A new look at the people and the potential. *Management Decision*, 35, 328–38.

Tu, Y., Lu, X., & Yu, Y. (2017). Supervisors' Ethical Leadership and Employee Job Satisfaction: A Social Cognitive Perspective. *Journal of Happiness Studies*, 18, 2017, 229-245. https://doi.org/10.1007/s10902-016-9725-1

Turban, D. B., & Greening, D. W. (1997). Corporate social performance and organisational attractiveness to prospective employees. *Academy of Management Journal*, 40, 658-672. http://dx.doi.org/10.2307/257057

Tziner, A., Oren, L., Bar, Y., & Kadosh, G. (2011). Corporate Social Responsibility, Organizational Justice and Job Satisfaction: How do They Interrelate, If at All? *Revista de Psicología del Trabajo y de las Organizaciones*, 27, 67-72.

Urbina, S. (2004). *Essentials of psychological testing*. Hoboken, New Jersey: John Wiley & Sons Inc.

Valentine, S., & Fleischman, G. M. (2008). Ethics Programs, Perceived Corporate Social Responsibility and Job Satisfaction. *Journal of Business Ethics*, 77, 159

Van der Voet, J., Kuipers, B., & Groeneveld, S. (2015),"Held back and pushed forward: leading change in a complex public sector environment". *Journal of Organizational Change Management*, 28, 290 – 300. http://dx.doi.org/10.1108/JOCM-09-2013-0182

Van Wyk., R., & Adonisi, M. (2012). Antecedents of corporate entrepreneurship. *South African Business Management*, 43, 15 – 28.

Velez, M. J., & Neves, P. (2017). The relationship between abusive supervision, distributive justice and job satisfaction: a substitutes for leadership approach. *European Review of Applied Psychology*, 67, 187-198.

Vlachos, P. A., Panagopoulos, N. G., & Rapp, A. A. (2013). Feeling Good by Doing Good: Employee CSR-Induced Attributions, Job Satisfaction, and the Role of Charismatic Leadership. *Journal of Business Ethics*, 118, 577.

Wolchover, N. (2011). How many people can earth support? https://www.livescience.com/16493-people-planet-earth-support.html

Wolmarans, H., & Sartorius, K. (2009). Corporate social responsibility: The financial impact of black economic empowerment transactions in South Africa. *South African Journal of Economic and Management Sciences*, 12, 180-193.

Yongqiang, G., & Wei, H. (2017) "Corporate social responsibility and employee organizational citizenship behavior: The pivotal roles of ethical leadership and organizational justice", *Management Decision*, 55, 294-309, https://doi.org/10.1108/MD-05-2016-0284

Yusuf, R. M. (2018). "The effect of employee ability, hospital's ethic and leadership on job satisfaction through employee commitment: A study on an Indonesian Type A government hospital". *Journal of Management Development*, 37, 40-52.

Zadek, S. (2001). The civil corporation: the new economy of corporate citizenship. London; Sterling, VA: Earthscan.

Zadek, S. (2005). *The Path to Corporate Responsibility*. Harvard business review. 82. 125-32, 150. 10.1007/978-3-540-70818-6_13.

Zehir, C., Muceldili, B., & Zehir, S. (2012). The Impact of Corporate Entrepreneurship on Organizational Citizenship Behaviour and Organizational Commitment: Evidence from Turkey SMEs. *Procedia - Social and Behavioural Sciences*, 58, 924-933.

## Appendix 1: Phase one organisational access request letter

**Access request letter: Phase 1**
School of Human & Community Development
Psychology
**University of the Witwatersrand**

Private Bag 3, WITS, 2050
Tel: (011) 717 4500 Fax: (011) 717 4559

Good day

My name is Sifiso Mlilo and I am conducting research on the impact of corporate social entrepreneurship (CSE) on organisational effectiveness. This is being done for studies towards a PhD degree at the University of the Witwatersrand. There are two phases to this study and for this particular phase participants will be involved in completing a CSE scale to enable the researcher to determine the suitability of using the scale in the second phase. I would therefore like to invite your organisation and employees to participate in this initial phase of the study.

Participation in the research will entail completing the attached CSE scale which should take approximately 15 minutes. Apart from assisting the researcher by distributing the survey link to employees across the organisation, no involvement would be required on your part. Where a paper based method is preferred, I will make physical copies of the CSE scale available to employees at a location agreed upon by the organisation and myself. I will also provide a box where completed CSE scales may be placed by participants.

Participation by employees needs to be voluntary to ensure university ethics requirements are met, and employees will be assured that they will not be advantaged or disadvantaged in any way for choosing to participate or not to participate in the study. Responses will be kept confidential and no information that could identify individual employees would be included in the research report.

Thank you for taking the time to consider taking part in this study. I would be happy to come through and discuss the study further should you wish. I can be contacted telephonically at 083 588 6109 or via e-mail at sifiso.mlilo@gmail.com. This research will contribute to a larger body of knowledge about corporate social entrepreneurship and its impact on human behaviour in the organisational context. It also represents a first in conceptualising corporate social entrepreneurship for measurement purposes and thus places South Africa at the forefront of knowledge development in that area.

Feedback in the form of an executive summary will be provided to the organisation and participants on request once this phase of the research is completed. A copy of the PhD research thesis would also be provided to the participating organisations on a complimentary basis.

Yours sincerely

Sifiso Mlilo

## Appendix 2: Phase two organisational request access letter

**Access request letter: Phase 2**
School of Human & Community Development
Psychology
**University of the Witwatersrand**

Private Bag 3, WITS, 2050
Tel: (011) 717 4500 Fax: (011) 717 4559

Good day

My name is Sifiso Mlilo and I am conducting research on the impact of corporate social entrepreneurship (CSE) on organisational effectiveness. This is being done for studies towards a PhD degree at the University of the Witwatersrand. Participants will be involved in completing five questionnaires to enable the effective evaluation of CSE on internal organisational functioning. I would like to invite your organisation and employees to participate in the study.

Participation in the research will entail completing five questionnaires which should take approximately 35 minutes. Apart from assisting the researcher by distributing the survey link to employees across the organisation, no involvement would be required on your part. Where a paper based method is preferred, I will make physical copies of the questionnaires available to employees at a location agreed upon by the organisation and myself. I will also provide a box where completed questionnaires may be placed by participants.

Participation by employees needs to be voluntary to ensure university ethics requirements are met, and employees will be assured that they will not be advantaged or disadvantaged in any way for choosing to participate or not to participate in the study. Responses will be kept confidential and no information that could identify individual employees would be included in the research report.

Thank you for taking the time to consider taking part in this study. I would be happy to come through and discuss the study further should you wish. I can be contacted telephonically at 083 588 6109 or via e-mail at sifiso.mlilo@gmail.com. This research will contribute to a larger body of knowledge about corporate social entrepreneurship and its impact on human behaviour. It also represents a first in conceptualising corporate social entrepreneurship for measurement purposes as well as its influence on internal organisational functioning. Thus, it places South Africa at the forefront of knowledge development in the area.

Feedback in the form of an executive summary will be provided to the organisation and participants on request once the research is completed. A copy of the PhD research thesis would also be provided to the participating organisations on a complimentary basis.

Yours sincerely

Sifiso Mlilo

## Appendix 3: Phase one scale review participant information sheet

**Participant information sheet: Phase 1**
School of Human & Community Development
Psychology
**University of the Witwatersrand**

Private Bag 3, WITS, 2050
Tel: (011) 717 4500 Fax: (011) 717 4559

---

Good day

My name is Sifiso Mlilo and I am a student at the University of the Witwatersrand. I am conducting research for the purpose of obtaining a PhD degree. The research is on the impact of a corporate social entrepreneurship (CSE) on organisational effectiveness. I would like to invite you to participate in my research.

Participation in this research will entail evaluating the attached CSE scale and providing input pertaining to the coherence of each item's content for the construct of corporate social entrepreneurship. Participation in the study should take approximately 35 minutes. Participation in this study is voluntary, and you will not be advantaged or disadvantaged for choosing to partake in or refrain from completing the CSE scale. There are no direct benefits anticipated from participation in this study. Your feedback on the CSE scale will not be seen by anyone other than me and my supervisor and your responses will be saved in a neutral and secure location which is locked and only accessible to the researcher. Thus, confidentiality is guaranteed. Your responses will only be looked at in relation to all other responses which means that feedback given will be in the form of aggregated responses and not individual perceptions. An executive summary of the results of this phase of the study will be made available shortly after its completion and upon request.

You may withdraw from the study, without prejudice, at any stage up until you complete and submit your evaluation of the CSE scale. You will need to sign a consent form to confirm your voluntary participation in the study.

Your participation in this study would be greatly appreciated. This research will contribute to the field of corporate social entrepreneurship and its influence on human behaviour.

Best wishes,

Sifiso Mlilo

**Student: Sifiso Mlilo (sifiso.mlilo@gmail.com)**

**Supervisor: Prof. Karen Milner (Karen.Milner@wits.ac.za)**

## Appendix 4: Phase one consent form

### Consent Form: Participation in phase 1 of research

I _____ consent to participate in the study by Sifiso Mlilo on corporate social entrepreneurship and organisational effectiveness.

I understand that:
Participation is voluntary
My name and personal details will not be included in the research reports
My input is confidential
I will not be advantaged or disadvantaged in any way by participating in the study
I may withdraw from the study at any stage if I wish to do so.

I understand that data will be stored securely by Sifiso Mlilo on completion of the study.

Signed: _____

## Appendix 5: Phase one participation information sheet

**Participant information sheet: Phase 1**
School of Human & Community Development
Psychology
**University of the Witwatersrand**

Private Bag 3, WITS, 2050
Tel: (011) 717 4500 Fax: (011) 717 4559

---

Good day

My name is Sifiso Mlilo and I am a student at the University of the Witwatersrand. I am conducting research for the purpose of obtaining a PhD degree. The research is on the impact of a corporate social entrepreneurship (CSE) on organisational effectiveness. I would like to invite you to participate in the first phase of the research. This phase of the study aims to ensure that the corporate social entrepreneurship scale I have developed is suitable for use in the second phase of the study.

Participation in this research will entail completing the attached questionnaires which should take approximately 20 minutes. Participation is voluntary, and no one will be advantaged or disadvantaged for choosing to partake in or refrain from completing the questionnaires. There are no direct benefits anticipated from participation in this study. No questions are asked about your personal circumstances, no identifying information, such as your name or I.D. number, is asked for, and as such you will remain anonymous. Your completed questionnaire will not be seen by anyone other than me and my supervisor and your responses will be saved in a neutral and secure database which is password protected. Thus, your confidentiality is guaranteed. Your responses will only be looked at in relation to all other responses which means that the report for this study will discuss aggregated responses and not individual perceptions. An executive summary of the results of this study will be made available to you upon completion of the PhD and on request.

The completion and submission of your responses will be taken as your consent to participate in this study.

Your participation in this study would be greatly appreciated. This research will contribute to the field of corporate social entrepreneurship and its influence on human behaviour.

Best wishes,

Sifiso Mlilo

**Student: Sifiso Mlilo (sifiso.mlilo@gmail.com)**

**Supervisor: Prof. Karen Milner (Karen.Milner@wits.ac.za)**

## Appendix 6: Phase two participant information sheet

**Participant information sheet: Phase 2**
School of Human & Community Development
Psychology
**University of the Witwatersrand**

Private Bag 3, WITS, 2050
Tel: (011) 717 4500 Fax: (011) 717 4559

---

Good day

My name is Sifiso Mlilo and I am a student at the University of the Witwatersrand. I am conducting research for the purpose of obtaining a PhD degree. The research is on the impact of a corporate social entrepreneurship (CSE) on organisational effectiveness. I would like to invite you to participate in the first phase of the research. This phase of the study aims to ensure that the corporate social entrepreneurship scale I have developed is suitable for use in the second phase of the study.

Participation in this research will entail completing five questionnaires which should take approximately 35 minutes to complete. Participation is voluntary, and no one will be advantaged or disadvantaged for choosing to partake in or refrain from completing the questionnaire. There are no direct benefits anticipated from participation in this study. No questions are asked about your personal circumstances, no identifying information, such as your name or I.D. number, is asked for, and as such you will remain anonymous. Your completed questionnaire will not be seen by anyone other than me and my supervisor and your responses will be saved in a neutral and secure database which is password protected. Thus, your confidentiality is guaranteed. Your responses will only be looked at in relation to all other responses which means that feedback given to the organisation will be in the form of aggregated responses and not individual perceptions. An executive summary of the results of this study will be made available to you via your organisation's electronic bulletin board.

If you choose to participate, please click on this link. Submitting your responses will be taken as your consent to participate in this study.

Your participation in this study would be greatly appreciated. This research will contribute to the burgeoning field of corporate social entrepreneurship and its influence on human behaviour.

Best wishes,

Sifiso Mlilo

**Student: Sifiso Mlilo (sifiso.mlilo@gmail.com)**

**Supervisor: Prof. Karen Milner (Karen.Milner@wits.ac.za)**

## Appendix 7: Biographical questionnaire

**Gender**

| | |
|---|---|
| **Male** | **Female** |

**Age**

_____

**Race**

| | | | | |
|---|---|---|---|---|
| **African** | **Coloured** | **Indian** | **White** | **Other (please specify below)** |

_____

**Education**

| | | | | |
|---|---|---|---|---|
| **Grade 11 or below** | **Grade 12** | **Diploma** | **Undergraduate** | **Postgraduate** |

**Occupation**

_____

**Job type**

| | | | | | |
|---|---|---|---|---|---|
| **Administrative** | **Technical** | **Specialist** | **Managerial** | **Executive** | **Other (please specify below)** |

**Tenure**

| | | | | |
|---|---|---|---|---|
| **Less than a year** | **One to two years** | **Two to five years** | **Five to ten years** | **More than ten years** |

**Industry**

| | | | | | |
|---|---|---|---|---|---|
| **Aerospace & Defence** | **Automotive** | **Education & Research** | **Engineering & Construction** | **Financial Services** | **Healthcare** |
| **Information Technology** | **Life Sciences** | **Manufacturing** | **Media & Entertainment** | **Mining** | **Petrochemicals** |
| **Professional Services** | **Public Sector** | **Retail** | **Telecommunication** | **Travel and Sport** | **Utilities** |
| **Other (please specify)** | | | | | |

## Appendix 8: Draft CSE Scale

| Statement | Strongly disagree | Disagree | Undecided | Agree | Strongly agree |
|---|---|---|---|---|---|
| 1. The leadership team in my organisation consistently behaves in a manner that indicates their support for environmentally responsible business performance. | | | | | |
| 2. In my organisation there is a strong commitment to making a positive social impact from our leaders. | | | | | |
| 3. There is very little emphasis placed on the importance of social performance from the leadership team in my organisation. | | | | | |
| 4. Our leaders often highlight environmental performance as an important aspect of the organisation's approach to doing business. | | | | | |
| 5. The leadership team regularly reminds employees that economic performance should be viewed as only one of the indicators of organisational performance and success. | | | | | |
| 6. The leaders of my organisation view social performance as an important indicator of the organisation's long term success. | | | | | |
| 7. Environmental performance is viewed as a key aspect of creating a sustainable business by the organisation's leaders. | | | | | |
| 8. Ensuring the organisation contributes positively socially plays a role in determining how well we are rewarded in my organisation. | | | | | |
| 9. The organisation's environmental performance plays a role in determining the nature of the rewards we receive. | | | | | |
| 10. There are incentives offered for innovative ideas that help improve the environmental impact of the organisation. | | | | | |
| 11. Coming up with new ideas that create a positive social impact is incentivised in our organisation. | | | | | |
| 12. We are rewarded for initiatives that lead to good environmental outcomes for the organisation. | | | | | |
| 13. Rewards that encourage positive social responsibility outcomes exist in my organisation. | | | | | |
| 14. My organisation partners with other organisations to find ways of improving | | | | | |

| | | | | | |
|---|---|---|---|---|---|
| social outcomes. | | | | | |
| 15. My organisation collaborates with other organisations to look for ways to achieve good environmental outcomes. | | | | | |
| 16. Within my organisation departments work together to find innovative solutions to environmental challenges associated with the business. | | | | | |
| 17. Our organisation's different departments work together to find solutions to social challenges associated with the business. | | | | | |
| 18. There is collaboration between departments for improving the environmental impact of the organisation. | | | | | |
| 19. There is collaboration between departments for improving the social impact of the organisation. | | | | | |
| 20. In my organisation there is a strong belief that a positive social impact is best achieved through teamwork across departments. | | | | | |
| 21. My organisation is committed to collaborating with external stakeholders to help better society as a whole. | | | | | |
| 22. When it comes to social impact initiatives my organisation believes in working with other organisations to find solutions. | | | | | |
| 23. There is visible collaboration with other organisations regarding initiatives for enhancing environmentally responsible performance. | | | | | |
| 24. In my organisation there are individuals who champion social value creation. | | | | | |
| 25. In my organisation individuals who drive environmental value creation are known. | | | | | |
| 26. Within my organisation individuals with the specific role of encouraging positive environmental performance are known. | | | | | |
| 27. Within my organisation individuals with the specific role of encouraging positive social performance are known | | | | | |
| 28. It is easy to identify the individuals who drive strong social performance in my organisation. | | | | | |
| 29. It is clear who the individuals responsible for encouraging the organisation to improve environmental performance are. | | | | | |
| 30. The individuals responsible for driving innovation for better social performance in | | | | | |

| | | | | | |
|---|---|---|---|---|---|
| the organisation are visible. | | | | | |
| 31. The individuals responsible for driving innovation for improved environmental performance in the organisation are visible. | | | | | |
| 32. In my organisation there are individuals that help our different departments develop and implement innovative ideas for a positive social impact. | | | | | |
| 33. In my organisation there are individuals that help our different departments develop and implement innovative ideas for a positive environmental impact. | | | | | |
| 34. There are people within the organisation that have the task of helping with innovating for socially responsible value creation. | | | | | |
| 35. Contributing positively to society is an important part of my organisation's values. | | | | | |
| 36. Contributing positively to the environment is an important part of my organisation's values. | | | | | |
| 37. My organisation's values emphasise a commitment to environmentally responsible business conduct. | | | | | |
| 38. Our values at this organisation state that socially responsible business conduct is fundamental to the way we operate. | | | | | |
| 39. The values of my organisation encompass the importance of environmentally sound organisational behaviour. | | | | | |
| 40. In my organisation the mission statement articulates the importance of achieving environmentally responsible business success. | | | | | |
| 41. My organisation's mission statement includes a commitment to the achievement of good socially responsible performance. | | | | | |
| 42. Making a positive social impact is an important component of my organisation's mission statement. | | | | | |
| 43. My organisation's mission statement highlights making a positive environmental impact as an essential part of the way we conduct business. | | | | | |

## Appendix 9: CSE Scale

| Statement | Strongly disagree | Disagree | Unsure | Agree | Strongly agree |
|---|---|---|---|---|---|
| 1. In my organisation there is a strong commitment from our leaders to make a positive social impact. | | | | | |
| 2. My organisation partners with other organisations to find ways of improving social outcomes. | | | | | |
| 3. Within my organisation individuals with the specific role of encouraging positive environmental performance are known by me. | | | | | |
| 4. My organisation's mission statement includes a commitment to the achievement of good socially responsible performance. | | | | | |
| 5. Contributing positively to the environment is an important part of my organisation's values. | | | | | |
| 6. Ensuring the organisation contributes positively socially plays a role in determining how well we are rewarded in my organisation. | | | | | |
| 7. Environmental performance is viewed as a key aspect of creating a sustainable business by my organisation's leaders. | | | | | |
| 8. In my organisation there is a strong belief that a positive social impact is best achieved through teamwork between departments. | | | | | |
| 9. There is a definite belief that making a positive environmental impact increases company performance in the long term. | | | | | |
| 10. The leadership team regularly reminds us that economic performance should be viewed as only one of the indicators of organisational performance and success. | | | | | |

| | | | | | |
|---|---|---|---|---|---|
| 11. In my organisation the mission statement articulates the importance of achieving environmentally responsible business success. | | | | | |
| 12. Contributing positively to society is an important part of my organisation's values. | | | | | |
| 13. There is collaboration between departments to improve the environmental impact of our organisation. | | | | | |
| 14. There are people within my organisation that have the task of helping with innovating for socially responsible value creation. | | | | | |
| 15. There are incentives offered innovative ideas that help us improve the environmental impact of the organisation | | | | | |
| 16. My organisation collaborates with other organisations to look for ways to achieve good environmental outcomes. | | | | | |
| 17. The leadership team in my organisation consistently behaves in a manner that demonstrates their support for environmentally responsible business performance. | | | | | |
| 18. There is a definite belief that making a positive social impact increases company performance in the long term | | | | | |
| 19. We are incentivised to come up with new ideas that can create a positive social impact in my organisation. | | | | | |
| 20. In my organisation there are individuals who champion social value creation. | | | | | |

| | | | | | |
|---|---|---|---|---|---|
| 21. Our organisation's different departments work together to find solutions to social challenges associated with the business. | | | | | |
| 22. My organisation's values emphasise a commitment to environmentally responsible business conduct. | | | | | |
| 23. The leaders of my organisation view social performance as an important indicator of the organisation's long term success. | | | | | |
| 24. My organisation's environmental performance plays a role in determining the nature of the rewards we receive. | | | | | |
| 25. It is clear who the individuals responsible for encouraging my organisation to improve environmental performance are. | | | | | |
| 26. Within my organisation departments work together to find innovative solutions to environmental challenges associated with the business. | | | | | |
| 27. The values of my organisation emphasise the importance of environmentally sound organisational behaviour. | | | | | |
| 28. Our leaders often highlight positive environmental performance as an important aspect of the organisation's approach to doing business. | | | | | |
| 29. My organisation is committed to collaborating with external stakeholders to help better society. | | | | | |
| 30. It is easy to identify the individuals who drive social performance in my organisation. | | | | | |
| 31. The values of my organisation state that socially responsible business conduct is fundamental to the way we operate. | | | | | |

| | | | | | |
|---|---|---|---|---|---|
| 32. In my organisation individuals who drive environmental value creation are known by me. | | | | | |
| 33. In my organisation there are individuals that help our different departments develop and implement innovative ideas for a positive environmental impact. | | | | | |

## Appendix 10: Employee Engagement Scale

| Statement | Strongly disagree | Disagree | Undecided | Agree | Strongly agree |
|---|---|---|---|---|---|
| 1. I really "throw" myself into my job | | | | | |
| 2. Sometimes I am so into my job that I lose track of time | | | | | |
| 3. This job is all consuming; I am totally into it | | | | | |
| 4. My mind often wanders and I think of other things when doing my job (R) | | | | | |
| 5. I am highly engaged in this job | | | | | |
| 6. Being a member of this organisation is very captivating | | | | | |
| 7. One of the most exciting things for me is getting involved with things happening in this organisation. | | | | | |
| 8. I am really not into the "goings-on" in this organisation (R). | | | | | |
| 9. Being a member of this organisation make me come "alive" | | | | | |
| 10. Being a member of this organisation is exhilarating for me | | | | | |
| 11. I am highly engaged in this organisation | | | | | |

## Appendix 11: OCB scale

| Statement | Strongly Disagree | Disagree | Slightly disagree | Undecided | Slightly agree | Agree | Strongly agree |
|---|---|---|---|---|---|---|---|
| **d1.** I help others who have heavy workloads | | | | | | | |
| **d2.** I can be described as the classic "squeaky wheel" that always needs greasing. | | | | | | | |
| **d3.** I believe in giving an honest day's work for an honest day's pay. | | | | | | | |
| **d4.** I try to avoid creating problems for co-workers. | | | | | | | |
| **d5.** I consume a lot of time complaining about trivial matters. | | | | | | | |
| **d6.** I keep abreast of developments in the organisation. | | | | | | | |
| **d7**. I tend to make problems bigger than they are. | | | | | | | |
| **d8.** I consider the impact of my actions on co-workers. | | | | | | | |
| **d9.** I attend meetings that are not mandatory but are considered important. | | | | | | | |
| **d10.** I am always ready to lend a helping hand to those around me. | | | | | | | |
| **d11.** I attend functions that are not required, but help the organisation image. | | | | | | | |
| **d12.** I read and keep up with organisation announcements, memos, etc. | | | | | | | |
| **d13.** I help others who have been absent. | | | | | | | |
| **d14.** I do not abuse the rights of others. | | | | | | | |
| **d15.** I willingly give my time to help others who have work related problems. | | | | | | | |
| **d16.** I tend to focus on what is wrong with my situation rather than the positive side. | | | | | | | |
| **d17.** I take steps to try to prevent problems with other workers. | | | | | | | |
| **d18.** My attendance at work is above the norm. | | | | | | | |
| **d19.** I always find fault with what the organisation is doing. | | | | | | | |
| **d20.** I am mindful of how my behaviour affects other people's jobs. | | | | | | | |
| **d21.** I do not take extra breaks. | | | | | | | |
| **d22**. I obey rules and regulations even when no one is watching. | | | | | | | |
| **d23.** I help orient new people even though it is not required. | | | | | | | |
| **d24.** I am one of the most conscientious employees. | | | | | | | |

## Appendix 12: Job satisfaction scale

| | **Strongly Disagree** | **Disagree** | **Slightly disagree** | **Neither agree or disagree** | **Slightly agree** | **Agree** | **Strongly agree** |
|---|---|---|---|---|---|---|---|
| 1) All in all, I am satisfied with my job. | | | | | | | |
| 2) In general, I don't like my job. | | | | | | | |
| 3) In general, I like working here. | | | | | | | |

## Appendix 13: The Corporate Entrepreneurship Assessment Instrument (CEAI)

Strongly Disagree Disagree Not Sure Agree Strongly Agree

1 2 3 4 5

Section 1: Management support for corporate entrepreneurship

1. My organization is quick to use improved work methods.

2. My organization is quick to use improved work methods that are developed by workers.

3. In my organization, developing one's own ideas is encouraged for the improvement of the corporation.

4. Upper management is aware and very receptive to my ideas and suggestions.

5. A promotion usually follows from the development of new and innovative ideas.

6. Those employees who come up with innovative ideas on their own often receive management encouragement for their activities.

7. The ''doers on projects'' are allowed to make decisions without going through elaborate justification and approval procedures.

8. Senior managers encourage innovators to bend rules and rigid procedures in order to keep promising ideas on track.

9. Many top managers have been known for their experience with the innovation process.

10. Money is often available to get new project ideas off the ground.

11. Individuals with successful innovative projects receive additional rewards and compensation beyond the standard reward system for their ideas and efforts.

12. There are several options within the organization for individuals to get financial support for their innovative projects and ideas.

13. People are often encouraged to take calculated risks with ideas around here.

14. Individual risk takers are often recognized for their willingness to champion new projects, whether eventually successful or not.

15. The term ''risk taker'' is considered a positive attribute for people in my work area.

16. This organization supports many small and experimental projects, realizing that some will undoubtedly fail.

17. An employee with a good idea is often given free time to develop that idea.

18. There is considerable desire among people in the organization for generating new ideas without regard for crossing departmental or functional boundaries.

19. People are encouraged to talk to employees in other departments of this organization about ideas for new projects.

Section 2: Work discretion

20. I feel that I am my own boss and do not have to double check all of my decisions with someone else.

21. Harsh criticism and punishment result from mistakes made on the job.

22. This organization provides the chance to be creative and try my own methods of doing the job.

23. This organization provides the freedom to use my own judgment.

24. This organization provides the chance to do something that makes use of my abilities.

25. I have the freedom to decide what I do on my job.

26. It is basically my own responsibility to decide how my job gets done.

27. I almost always get to decide what I do on my job.

28. I have much autonomy on my job and am left on my own to do my own work.

29. I seldom have to follow the same work methods or steps for doing my major tasks from day to day.

Section 3: Rewards/Reinforcement

30. My manager helps me get my work done by removing obstacles and roadblocks.

31. The rewards I receive are dependent upon my innovation on the job.

32. My supervisor will increase my job responsibilities if I am performing well in my job.

33. My supervisor will give me special recognition if my work performance is especially good.

34. My manager would tell his/her boss if my work was outstanding.

35. There is a lot of challenge in my job.

Section 4: Time availability

36. During the past three months, my workload kept me from spending time on developing new ideas.

37. I always seem to have plenty of time to get everything done.

38. I have just the right amount of time and workload to do everything well.

39. My job is structured so that I have very little time to think about wider organizational problems.

40. I feel that I am always working with time constraints on my job.

41. My co-workers and I always find time for long-term problem solving.

Section 5: Organizational boundaries

42. In the past three months, I have always followed standard operating procedures or practices to do my major tasks.

43. There are many written rules and procedures that exist for doing my major tasks.

44. On my job I have no doubt of what is expected of me.

45. There is little uncertainty in my job.

46. During the past year, my immediate supervisor discussed my work performance with me frequently.

47. My job description clearly specifies the standards of performance on which my job is evaluated.

48. I clearly know what level of work performance is expected from me in terms of amount, quality, and timelines of output.

# Appendix 14: Ethical Clearance Certificate

Research Office

**HUMAN RESEARCH ETHICS COMMITTEE (NON-MEDICAL)**
R14/49 Mlilo

| | |
|---|---|
| **CLEARANCE CERTIFICATE** | **PROTOCOL NUMBER H14/11/04** |
| **PROJECT TITLE** | Corporate social entrepreneurship climate, employee engagement, organisational citizenship behaviour and job satisfaction |
| **INVESTIGATOR(S)** | Mr S Mlilo |
| **SCHOOL/DEPARTMENT** | Human and Community Development/Psychology |
| **DATE CONSIDERED** | 21 November 2014 |
| **DECISION OF THE COMMITTEE** | Approved Unconditionally |
| **EXPIRY DATE** | 07/12/2016 |
| **DATE** 08/12/2014 | **CHAIRPERSON** (Professor T Milani) |

cc: Supervisor : Prof K Milner

---

**DECLARATION OF INVESTIGATOR(S)**

To be completed in duplicate and **ONE COPY** returned to the Secretary at Room 10000, 10th Floor, Senate House, University.

I/We fully understand the conditions under which I am/we are authorized to carry out the abovementioned research and I/we guarantee to ensure compliance with these conditions. Should any departure to be contemplated from the research procedure as approved I/we undertake to resubmit the protocol to the Committee. **I agree to completion of a yearly progress report.**

_____ _____/_____/_____

**Signature** **Date**

**PLEASE QUOTE THE PROTOCOL NUMBER ON ALL ENQUIRIES**