

https://dspace.org/

Creation of a benchmark sample to facilitate gap etching analysis of pre-payment meter surge arresters removed from the field

Koert, Arend Jan

2008-08-08T11:54:39Z
http://hdl.handle.net/10539/5318

Downloaded from a DSpace repository. https://dspace.org/

3 DEFINING THE TEST SPACE

In Chapter 2, the test space framework is defined requiring waveforms between 4/40 μs and 4/70 μs, and peak current ranging between 0 and 65 kA (refer to Figure 2.1). Therefore creating the benchmark sample, requires at least the 4/40 μs and 4/70 μs waveform extremes i.e. "Area of interest", where the 4/55 μs waveform may be considered to be a typical average for this waveform range. Additionally, the use of the 8/20 μs waveform is advisable because it is an industry standard.

The number of data points required per waveform depends on the achievable resolution – this is best determined by analysing preliminary gap etching samples; in the absence of further information, at least five significantly dissimilar non-zero data points per waveform are required – this may be increased later as deemed necessary.

3.1 Lightning Impulse Generator

A lightning impulse combination generator available in the HV laboratory of the Electrical Engineering Department at the University of the Witwatersrand (Melaia, 1993), generates a 1.2/50 μs voltage impulse into an open-circuit and an 8/20 μs current impulse into a short-circuit.

The generator may be reconfigured to generate other waveform combinations, where the selection of 5 components is achieved through repeated (tedious) simulation. In practice the challenge is the construction of low-inductance resistors that shape the voltage impulse. However, the generator may be configured in current mode only as per Figure 3.1, which simplifies matters considerably - fortunately only the current waveform is required to create the benchmark sample.

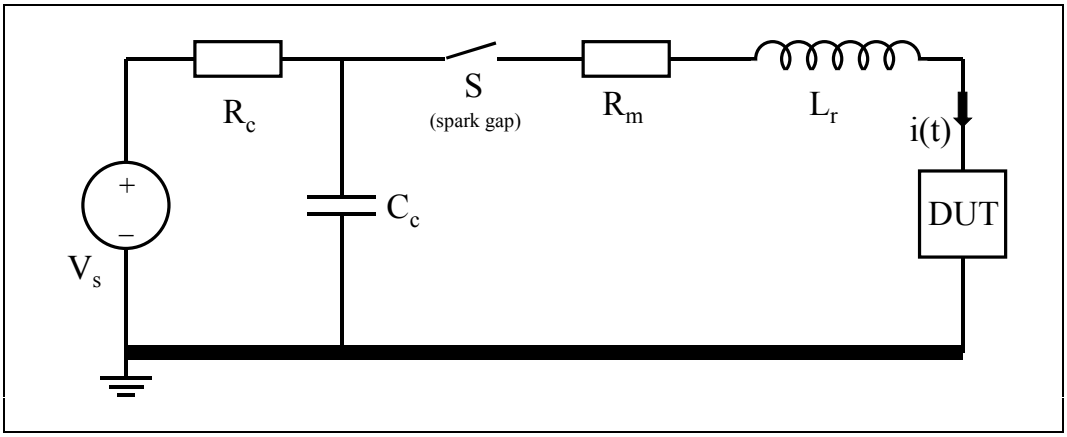

Figure 3.1: Combination generator in current mode

3.1.1 Description and principle of operation

In the charging loop a dc voltage source V_s charges the charging capacitor C_c via series resistor R_c. Capacitor C_c comprises a bank of four capacitors typically connected in series for combination mode or symmetrical series-parallel for current mode. The dc voltage source V_s comprises a 230 Vac variac supplying a step-up transformer and rectifier to yield a maximum allowable charging voltage of 20 kV, which is monitored via a 1000:1 voltage probe connected to a multimeter. To charge C_c, the variac is slowly turned up, and upon reaching the desired V_s, rapidly returned to zero.

In the discharging loop, C_c is discharged via switch S into resistor R_m, inductor L_r and the device-under-test (DUT). Switch S is a solenoid-controlled spark gap operated via a toggle switch. R_m and L_r are wave-shaping elements provided by a single resistive inductor component – typically Nichrome[1] resistance wire where the inductance is determined by winding geometry e.g. solenoid. The current through the DUT is measured via a 1000:1 Pearson current transformer connected to a Tektronix TDS544A digital storage oscilloscope with 500 MHz bandwidth. The oscilloscope is mounted in a screened enclosure and powered via an isolation transformer.

[1] Alloy of Nickel, Iron and Chrome.

3.1.2 Quantifying the waveform & circuit parameters

The waveform parameters (e.g. 8/20 μs) are defined under short-circuit conditions i.e. DUT replaced by a shunt. Hence the net charge associated with *i(t)* upon closure of spark gap S, is equal to the charge stored in capacitor C_c prior to closure of spark gap S:

$$Q_g = \int_0^T i(t)\,dt = I\int_0^T \frac{i(t)}{I}dt = I\,T_{Wg} = C_c\,V_s \tag{3.1}$$

where Q_g is the charge (C) stored in C_c, I is the peak current (A), V_s is the (dc) generator voltage (V), T is the duration (s) and T_{Wg} is defined as the area under the normalised current waveform in units of time (s) i.e. an equivalent (square-pulse) duration for the generator that is unique for a particular waveform, thereby providing a basis for comparison in terms of net Coulomb-charge. Note: T_{Wg} must not be confused with T_W (refer to Chapter 2) – the latter relates to the total charge movement through the gap.

For the four chosen waveforms, the applicable 2nd-order circuit parameters (refer to Appendix A) and T_{Wg} values computed using equation (3.1) with T set to a large value (e.g. 5000 μs), are shown in Table 3.1.

Table 3.1: Circuit parameters and T_{Wg} for chosen waveforms

WAVEFORM	$1/\omega_n$ (μs)	$1/\alpha$ (μs)	T_{Wg} (μs)	TYPE
8/20 μs	7.9	22.0	12.6	Under-damped
4/40 μs	9.4	3.8	51.5	Over-damped
4/55 μs	11.0	3.6	72.5	Over-damped
4/70 μs	12.5	3.5	94.9	Over-damped

Equation (3.1) shows that for a particular waveform, C_c and V_s determine I. For the existing generator, C_c comprises four capacitors connected either in series (combination mode) or in symmetrical series-parallel (current mode), respectively 8.47 μF and 33.93 μF, as measured using a Philips PM6303 RCL meter. One more configuration comprises four capacitors connected in parallel i.e. 136 μF.

Maximum terminal-to-terminal and terminal-to-casing voltage per capacitor is 10 kV and 20 kV respectively, but the casings are connected to the generator chassis; therefore maximum V_s per capacitor configuration may be deduced from Figure 3.2, which shows the stray terminal-to-casing capacitance's per capacitor.

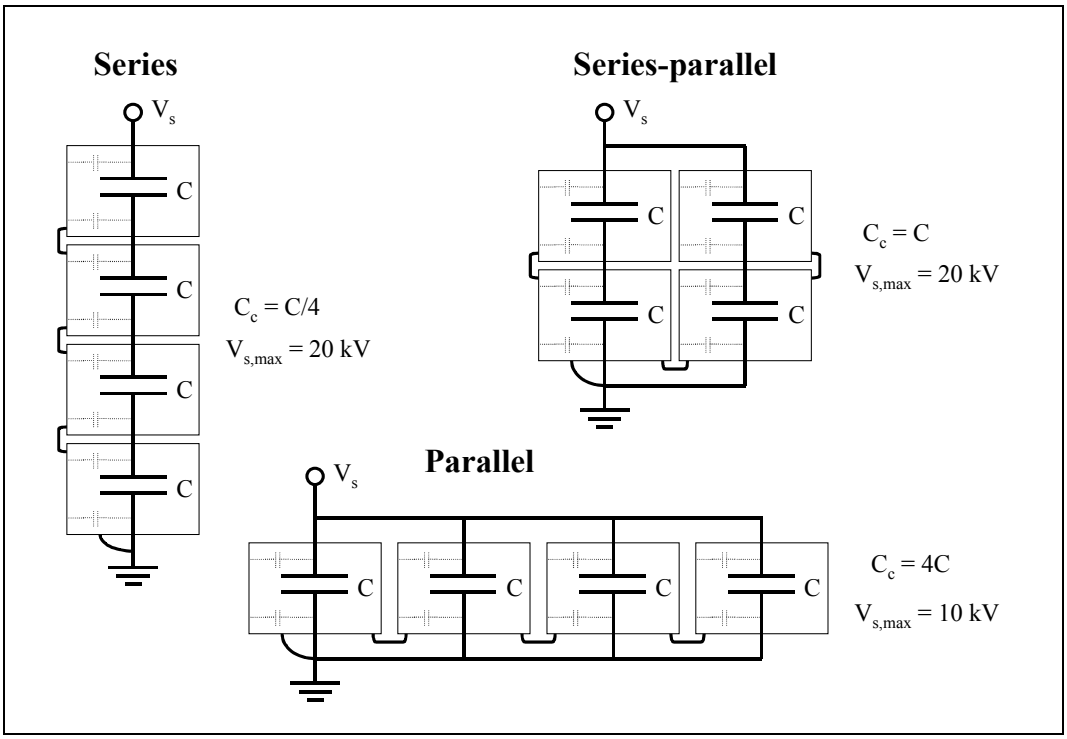

Figure 3.2: $V_{s,max}$ per capacitor configuration

In general a series-connection allows high maximum V_s but low Q_g, whilst a parallel connection limits the maximum V_s but allows higher Q_g. As per equation (3.1) this respectively results in a low and a high maximum I.

Practically, for a particular waveform, varying V_s varies I. However, it is important that V_s remains sufficiently high to ensure that the surge arrester gap (i.e. DUT) sparks over – this situation is exacerbated for multiple series-connected surge arrester gaps as per the EPRI study. Therefore to attain low I, it is necessary to reduce C_c rather than further reducing V_s. This entails the use of the various capacitor configurations – in each case a different R_m and L_r is required for the same waveform. Table 3.2 shows a selection of ideal R_m and L_r values calculated for each waveform and capacitor configuration, and associated I_{max}.

Table 3.2: Calculated R_m and L_r with associated I_{max} for each waveform per C_c

WAVE-FORM	C_c (μF)	$V_{s,max}$ (kV)	$Q_{g,max}$ (C)	R_m (Ω)	L_r (μH)	I_{max} (kA)
8/20 μs	8.47	20	0.17	0.67	7.4	13.4
	33.93	20	0.68	0.17	1.8	53.9
	136	10	1.36	0.04	0.5	107.9
4/40 μs	8.47	20	0.17	5.49	10.4	3.3
	33.93	20	0.68	1.37	2.6	13.2
	136	10	1.36	0.34	0.6	26.4
4/55 μs	8.47	20	0.17	7.94	14.3	2.3
	33.93	20	0.68	1.98	3.6	9.4
	136	10	1.36	0.49	0.9	18.8
4/70 μs	8.47	20	0.17	10.54	18.4	1.8
	33.93	20	0.68	2.63	4.6	7.2
	136	10	1.36	0.66	1.1	14.3

The resulting test space (drawn to scale) is shown in Figure 3.3. The black dots represent I_{max} for each of the selected waveforms per C_c; the associated hyperbolic curves represent $Q_{g,max}$ per C_c. As will be seen in the next chapter, the lowest L_r values as per Table 3.2 were not attainable due to stray inductance – in these cases the dot shifts down the constant $Q_{g,max}$ curves as per equation (3.1) i.e. longer waveform (larger T_{Wg}) with an associated decrease in I_{max}.

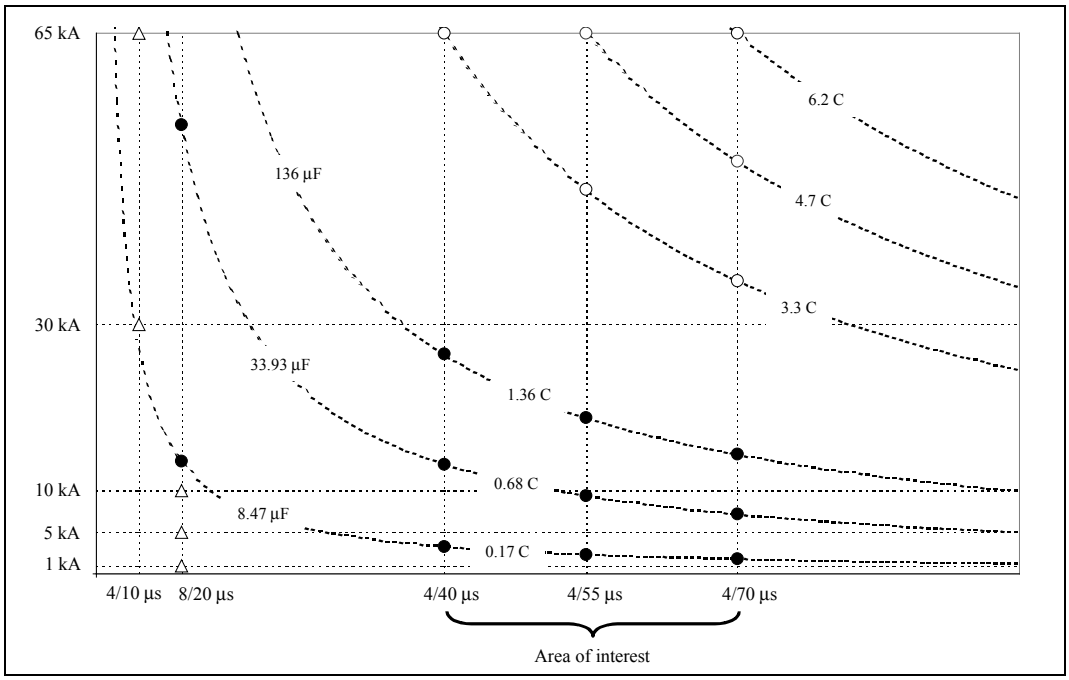

Figure 3.3: Test space showing I_{max} and $Q_{g,max}$ for each waveform per C_c

The hyperbolic curves associated with the white dots show that to achieve full coverage of the "Area of interest" requires $Q_{g,max}$ up to 6.2 C. This cannot be achieved by significantly increasing C_c, as this requires a very low L_r (impossible due to stray inductance constraint), whilst V_s cannot be increased significantly given the maximum terminal-to-terminal and terminal-to-casing voltage limitation per capacitor.

The extent of the test space is therefore constrained chiefly by test equipment limitations – this is covered extensively in Chapter 4.

3.2 Etching Repeatability

Etching repeatability is best obtained by simultaneously subjecting multiple series-connected surge arrester gaps to an impulse, thereby yielding a narrow statistical spread of gap etching area values (data points) around the mean for a given waveform/peak-current combination set-point. Standard deviation less than 10% of the mean is deemed sufficient to demonstrate good etching repeatability. Note that a gap comprises a pair of gap plates separated by an insulating spacer.

Whilst a large sample size per set-point is preferred for statistical confidence, the initially-impressed open-circuit voltage must be sufficient to cause the series-connected surge arrester gaps to spark over. Therefore from equation (3.1), the number of series-connected surge arrester gaps G, determines the minimum attainable current:

$$I_{\min} = \frac{C_c V_{s,\min}}{T_{Wg}} = \frac{C_c G V_{so}}{T_{Wg}} \tag{3.2}$$

where spark-over voltage V_{so} lies between 2 kV and 3 kV for each gap (TRMSCAAP2: 1994, Rev. 2). Similarly from equation (3.1), the maximum current I_{max} determines the maximum number of series-connected gaps:

$$G_{\max} = \frac{I_{\max}\ T_{Wg}}{V_{so}\ C_c} = \frac{V_{s,\max}}{V_{so}} \tag{3.3}$$

Assuming V_{so} = 2.5 kV, then for each waveform and capacitor configuration, G_{max} (for each I_{max} as per Table 3.2) and I_{min} (for selected G) are given in Table 3.3.

Table 3.3: G_{max} and I_{min} for each waveform per available C_c due to V_{so} = 2.5 kV

WAVE-FORM	C_c (μF)	I_{max} (kA)	G_{max}	I_{min} (kA)			
				G = 1	G = 2	G = 4	G = 8
8/20 μs	8.47	13.4	8	1.7	3.4	6.7	13.4
	33.93	53.9	8	6.7	13.5	26.9	53.9
	136	107.9	4	27.0	54.0	107.9	-
4/40 μs	8.47	3.3	8	0.4	0.8	1.6	3.3
	33.93	13.2	8	1.6	3.3	6.6	13.2
	136	26.4	4	6.6	13.2	26.4	-
4/55 μs	8.47	2.3	8	0.3	0.6	1.2	2.3
	33.93	9.4	8	1.2	2.3	4.7	9.4
	136	18.8	4	4.7	9.4	18.8	-
4/70 μs	8.47	1.8	8	0.2	0.4	0.9	1.8
	33.93	7.2	8	0.9	1.8	3.6	7.2
	136	14.3	4	3.6	7.2	14.3	-

Note: Entries marked "-" indicate that the gaps cannot spark over even for $V_{s,max}$

Clearly an increasing number of series-connected surge arrester gaps severely affects the available I range as C_c increases. To promote standardisation for all waveform/peak-current set-points, G = 4 is an optimum selection. However to achieve very low I, it is necessary to apply separate impulses to two groups of G = 2 (i.e. 2 + 2) or even four groups of G = 1 (i.e. 1 + 1 + 1 + 1), at the risk of unacceptable statistical spread of gap etching area values around the mean.

3.3 Conclusion

Four waveforms (8/20 μs, 4/40 μs, 4/55 μs and 4/70 μs) were selected within the test space framework proposed in Chapter 2; the first represents the industry standard, whilst the remaining three cover the "Area of interest". However the available lightning impulse generator at the University of the Witwatersrand

places limitations upon the extent of the test space that may be populated i.e. less than 50% of the “Area of interest”. At this stage of the work, the significance of this was unknown pending comparison of a sample of field-gaps to the benchmark sample – possibly necessitating the use of alternative equipment to complete the benchmark sample.

The need for spark-over of up to four series-connected surge arrester gaps (etching repeatability requirement) results in typically non-overlapping peak-current ranges per waveform, requiring utilisation of the various capacitor configurations (series, symmetrical series-parallel and parallel) i.e. requiring 12 resistive inductor components.