

https://dspace.org/

Use of the OVESCO OTSC Proctology Clip for closure of fistulainano at Wits Donald Gordon Medical Centre a single centre experience

Saul Grossberg; Nadine Harran; Brandon Bebington; Dean Lutrin

https://hdl.handle.net/10539/36391
WOS

Downloaded from a DSpace repository. https://dspace.org/

Southern African Journal of Surgery 2020; 58(2):74-77
https://doi.org/10.17159/2078-5151/2020/v58n2a3131

Open Access article distributed under the terms of the
Creative Commons License [CC BY-NC-ND 4.0]
http://creativecommons.org/licenses/by-nc-nd/4.0

South African
Journal of Surgery
ISSN 038-2361
© 2020 The Author(s)
COLORECTAL SURGERY

Use of the OVESCO OTSC® Proctology Clip for closure of fistula-in-ano at Wits Donald Gordon Medical Centre – a single centre experience

SJ Grossberg ,[1] N Harran,[2,3] B Bebington,[2] DL Lutrin[2,3]

[1] Department of Surgery, Charlotte Maxeke Johannesburg Academic Hospital, South Africa
[2] Colorectal Unit, Wits Donald Gordon Medical Centre, South Africa
[3] Department of Surgery, University of the Witwatersrand, South Africa

Corresponding author, email: *saulgrossberg@gmail.com*

Background: Definitive closure of fistula-in-ano poses an ongoing surgical challenge. The OVESCO OTSC® Proctology Clip (proctology clip) purports to offer improved preservation of the anal sphincter whilst at the same time curing the fistula by closure.
Methods: A retrospective record review was conducted for patients who received the proctology clip as part of the management of fistula-in-ano in the Colorectal Unit at Wits Donald Gordon Medical Centre (WDGMC).
Results: There were 19 cases of fistula-in-ano treated with the proctology clip. All were cryptoglandular in origin. The median age was 50 years (IQR 44–56 years) and post-procedure, the median follow-up duration was 145 days (IQR 63–298 days). Overall, 9 procedures were successful (47%). Success rates were higher for simple (66.7%) as opposed to complex (38.5%) fistula-in-ano. For patients who underwent placement of the proctology clip as a primary procedure, the success rate (50%) was slightly better than those who received the clip as a secondary procedure (44.4%).
Conclusion: This preliminary data presents our initial experience using the proctology clip. While these data may serve as a "proof of concept", a multi-centre controlled trial comparing this method to the rectal mucosal advancement flap (RMAF) is needed to determine the role of the proctology clip in the management of fistula-in-ano.
Keywords: anal fistula, OVESCO OTSC® Proctology Clip

Introduction

Definitive closure of fistula-in-ano poses an on-going surgical challenge. The goal of fistula management is permanent closure of the fistula while simultaneously preserving anal sphincter function.[1] Fistula-in-ano can be classified as simple or complex. A simple fistula may be treated with fistulotomy. The difficulty arises in a complex fistula as there is a higher risk of damaging the sphincter complex which may result in incontinence.[2] For complex fistulae, the rectal mucosal advancement flap (RMAF) is viewed as a standard choice of treatment.[3] Although a meta-analysis by Balciscueta et al. evaluating the rectal advancement flap for the management of complex fistulae reported a pooled recurrence rate for mucosal flaps of 31% and an incontinence rate of 10.3%.[4]

Other sphincter preserving techniques have been described which promise lower complication rates but are associated with varying degrees of success. Examples include fistulotomy with primary sphincter reconstruction,[5] fibrin glue,[6] anal fistula plug,[7] ligation of inter-sphincteric fistula tract (LIFT) procedure,[8] video-assisted anal fistula treatment (VAAFT)[6] and fistula-tract laser closure (FiLaC™).[9]

Fistulotomy with primary sphincter reconstruction has a reported recurrence rate of 8.6% with minor incontinence noted in 16.6% of patients.[5] The LIFT procedure has an average success rate of up to 70% with no reports of incontinence.[10] VAAFT has a reported success rate of 76% with no significant deterioration in continence noted.[11] The anal fistula plug has a reported success rate of 54.3% in cryptoglandular fistula with no incontinence reported.[12] Giamundo et al. demonstrated a success rate of 71.1% using FiLaC™ with no reported cases of incontinence.[9]

A new surgical method for closure of fistula-in-ano is the OVESCO OTSC® Proctology Clip (proctology clip) which purports to offer improved preservation of the anal sphincter whilst at the same time curing the fistula by closure. The clip is nitinol-based and dynamic, allowing constant pressure to be maintained on the internal fistula orifice during the healing process.[13] Reported success rates with the proctology clip range from 18–90% and success rates for primary procedures (79%) are higher than those performed as secondary procedures (26%).[14-18] This preliminary report aims to describe our experience, as a specialist referral Colorectal Unit, using the proctology clip for the primary

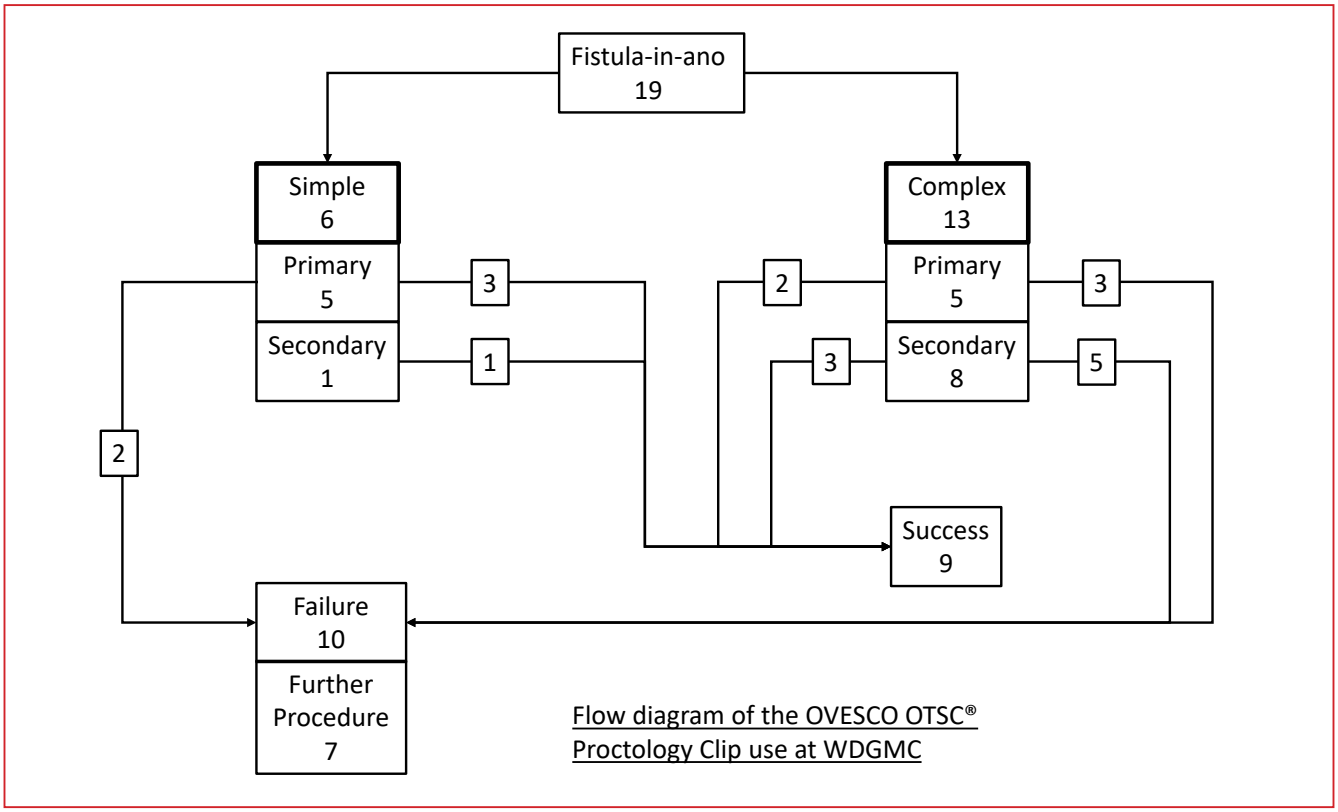

Figure 1: Flow diagram of the OVESCO OTSC® Proctology Clip use at WDGMC

and secondary management of simple and complex fistula-in-ano.

Methods

A retrospective record review was conducted for all patients who received the proctology clip as part of management of fistula-in-ano in the Colorectal Unit at Wits Donald Gordon Medical Centre (WDGMC) between 1 April 2016 and 31 May 2018. Records from patients older than 18 years with simple or complex fistula of cryptoglandular aetiology and who were treated with the proctology clip as a primary or secondary procedure where included. Records from patients with malignant, traumatic, iatrogenic, Crohn's fistulae or rectovaginal fistulae and records from patients with active perianal sepsis were excluded.

Simple fistulae are intersphincteric or low transphincteric (involving less than 30% of the sphincter muscle complex). Complex fistulae include (i) high transphincteric (involving more than 30% of the sphincter complex); (ii) extrasphincteric; (iii) suprasphincteric (iv) those presenting anteriorly in female patients; (v) those associated with inflammatory bowel disease, malignancy or radiotherapy.[2]

Management of all simple and complex fistula-in-ano included in this record review started with an initial drainage procedure (insertion of a seton suture) to allow sepsis to settle. The first definitive procedure was termed the 'primary' procedure and the next procedure was termed the 'secondary' procedure. All procedures were performed by trained colorectal surgeons who had further training on the use of the proctology clip by Professor Thomas Gottwald, who designed it.

For the procedure no bowel preparation was administered. Prophylactic antibiotics were given either intravenously or per rectum, depending on the individual surgeon's preference.

General anaesthesia was used. The patient was then placed in the lithotomy position. The external fistula orifice was then opened to assist with drainage. The internal fistula opening was identified via the seton suture and the fistula brush was then 'railroaded' through the tract to allow vigorous brushing of the tract. A disc of mucosa was then excised from the internal opening exposing the sphincter muscle surrounding the internal opening. Two vicryl stay sutures were then inserted through the sphincter muscle, one proximal and one distal to the internal fistula orifice. The OVESCO OTSC® Proctology Clip, using the deployment device, was then 'railroaded' over the stay sutures onto the mucosa; the clip was then deployed. As the clip was deployed tension was applied to the stay sutures, ensuring the internal opening was securely included within the clip's grasp. The stay sutures were then removed. Postoperatively the patient was sent back to the ward and usually discharged the same day on analgesia and stool softeners.

Success was determined by the attending surgeon based on their evaluation and expertise, and included closure of both the internal and external fistula orifices with no inflammation or signs of drainage from the fistula. Similarly, the attending surgeon defined failure as the presence of persistent pain, drainage, and/or failure of the internal and/or external fistula orifices to close. After placement of the proctology clip, patients were followed for 3 to 4 weeks, and as needed thereafter. There was no standardised long term follow-up protocol. Descriptive statistics were performed using Microsoft Excel 2010.

Results

There were 19 cases of fistula-in-ano treated with the proctology clip at WDGMC during the review period (Figure 1). The median age of those presenting for care was 50 years (interquartile range (IQR) 44–56 years) and the median follow-up duration was 145 days (IQR 63–298 days). All 19 cases were cryptoglandular in origin. Thirteen were complex fistula-in-ano and 10 were primary procedures.

Nine of the nineteen procedures were successful (47%). As expected, overall success rates were higher for simple (66.7%) as opposed to complex (38.5%) fistula-in-ano. For patients who underwent placement of the proctology clip as a primary procedure, the success rate (50%) was slightly better than those who received the clip as a secondary procedure – four out of nine (44.4%). Eight patients underwent a secondary procedure after the initial clip insertion. Of these, 7 had clip failure and 1 patient had an examination under anaesthesia during which an anal fissure was identified and treated, and the clip was successfully left in-situ. For the 7 patients who had failed the clip, 6 underwent seton insertion after which 2 patients had an anal fistula plug inserted and 1 patient underwent resection of the fistula tract. The seventh patient initially had a small pencil drain inserted after which a seton was inserted.

Of the remaining three patients with clip failure, two were planned for reintervention but this had not occurred during the time period of the study and one patient with clip failure declined another procedure.

Discussion

Despite surgical advances, fistula-in-ano remains a difficult condition to manage and there is no consensus regarding the optimal surgical treatment. To our knowledge, this is the first report from South Africa on the use of the proctology clip for management of fistula-in-ano. Our overall success rate of 47% was lower than the average success rate reported from other published data of 61%.[14,16-18] A small number of studies have reported success rates of up to 90%, however the patients in these studies were all highly selected, with fistulae of cryptoglandular aetiology.[13,19] One study reported a success rate of only 18% but the cases in that study were complex and unfavourable.[15] Our success rates might be lower because complex cases are referred to us as a specialist Colorectal Unit. The nature of these cases is that they have often undergone previous surgical intervention elsewhere and patients may have had a long disease duration. While the numbers in this study are too small to meaningfully compare outcomes among the different groups who received the proctology clip, this sample size is comparable to other studies evaluating the clip. A prospective randomised control trial is currently underway in Clermont-Ferrand, France, comparing the RMAF to the proctology clip for the management of fistula-in-ano.[3] To date, there have been no published results for this trial.

Conclusion

This preliminary data presents our initial experience using the proctology clip in a South African centre. While these data may serve as a 'proof of concept', a multi-centre randomised controlled trial comparing this method to the RMAF is needed to determine the role for the proctology clip in the management of fistula-in-ano in terms of fistula origin, complexity and its use for both primary and secondary fistula closure.

Funding source

No sources of funding were received for this study.

Disclosures

There are no financial disclosures for any of the authors.

Ethical approval

Approval for this study was obtained from the Human Research Ethics Committee (Medical), University of Witwatersrand (M180609).

ORCID

SJ Grossberg https://orcid.org/0000-0002-2648-8783

REFERENCES

1. Williams G, Williams A, Tozer P, et al. The treatment of anal fistula: second ACPGBI Position Statement – 2018. Color Dis. 2018;20:5-31. https://doi.org/10.1111/j.1463-1318.2007.01372.x.
2. Vogel JD, Johnson EK, Morris AM, et al. Clinical practice guideline for the management of anorectal abscess, fistula-in-ano, and rectovaginal fistula. Dis Colon Rectum. 2016;59(12):1117-33. https://doi.org/10.1097/DCR.0000000000000733.
3. Dubois A, Carrier G, Pereira B, et al. Therapeutic management of complex anal fistulas by installing a nitinol closure clip: Study protocol of a multicentric randomised controlled trial - FISCLOSE. BMJ Open. 2015;5(12):1-6. https://doi.org/10.1136/bmjopen-2015-009884.
4. Balciscueta Z, Uribe N, Balciscueta I, Andreu-Ballester JC, García-Granero E. Rectal advancement flap for the treatment of complex cryptoglandular anal fistulas: a systematic review and meta-analysis. Int J Colorectal Dis. 2017;32(5):599-609. https://doi.org/10.1007/s00384-017-2779-7.
5. Arroyo A, Pérez-Legaz J, Moya P, et al. Fistulotomy and sphincter reconstruction in the treatment of complex fistula-in-ano: Long-term clinical and manometric results. Ann Surg. 2012;255(5):9359. https://doi.org/10.1097/SLA.0b013e31824e9112.
6. Limura E, Giordano P. Modern management of anal fistula. World J Gastroenterol. 2015;21(1):12-20. https://doi.org/10.3748/wjg.v21.i1.12.
7. Van Koperen PJ, Bemelman WA, Bossuyt PMM, et al. The anal fistula plug versus the mucosal advancement flap for the treatment of anorectal fistula (PLUG trial). BMC Surg. 2008;5:1-5. https://doi.org/10.1186/1471-2482-8-11.
8. Anaraki F, Bagherzade G, Behboo R, Etemad O. Long-term results of ligation of intersphincteric fistula tract (LIFT) for management of anal fistula. J Coloproctology. 2016;36(4):227-30. https://doi.org/10.1016/j.jcol.2016.04.012.
9. Giamundo P, Esercizio L, Geraci M, Tibaldi L, Valente M. Fistula-tract Laser Closure (FiLaCTM): long-term results and new operative strategies. Tech Coloproctol. 2015;19(8):449-53. https://doi.org/10.1007/s10151-015-1282-9.
10. Hong KD, Kang S, Kalaskar S, Wexner SD. Ligation of intersphincteric fistula tract (LIFT) to treat anal fistula: Systematic review and meta-analysis. Tech Coloproctol.

2014;18(8):685-91. https://doi.org/10.1007/s10151-014-1183-3.
11. Garg P, Singh P. Video-Assisted Anal Fistula Treatment (VAAFT) in Cryptoglandular fistula-in-ano : A systematic review and proportional meta-analysis. Int J Surg. 2017;46:85-91. https://doi.org/10.1016/j.ijsu.2017.08.582.
12. Köckerling F, Alam NN, Narang SK, Daniels IR, Smart NJ. Treatment of fistula-in-ano with fistula plug – a review under special consideration of the technique. Front Surg. 2015 Oct 16;2:55. https://doi.org/10.3389/fsurg.2015.00055.
13. Prosst RL, Ehni W, Joos AK. The OTSC® Proctology clip system for anal fistula closure: First prospective clinical data. Minim Invasive Ther Allied Technol. 2013;22(5):255-9. https://doi.org/10.3109/13645706.2013.826675.
14. Prosst RL, Joos AK. Short-term outcomes of a novel endoscopic clipping device for closure of the internal opening in 100 anorectal fistulas. Tech Coloproctol. 2016;20(11):753-8. https://doi.org/10.1007/s10151-016-1537-0.
15. Gautier M, Godeberge P, Ganansia R, et al. Easy clip to treat anal fistula tracts: a word of caution. Int J Colorectal Dis. 2015;30(5):621-4. https://doi.org/10.1007/s00384-015-2146-5.
16. Dango S, Antonakis F, Schrader D, et al. Long-term efficacy and safety of a nitinol closure clip system for anal fistula treatment. Minim Invasive Ther Allied Technol [Internet]. 2017;26(4):227-31. https://doi.org/10.1080/13645706.2017.1282521.
17. Nordholm-Carstensen A, Krarup PM, Hagen K. Treatment of complex fistula-in-ano with a nitinol proctology clip. Dis Colon Rectum. 2017;60(7):723-8. https://doi.org/10.1097/DCR.0000000000000831.
18. Mennigen R, Laukötter M, Senninger N, Rijcken E. The OTSC® proctology clip system for the closure of refractory anal fistulas. Tech Coloproctol. 2015;19(4):241-6. https://doi.org/10.1007/s10151-015-1284-7.
19. Prosst RL, Joos AK, Ehni W, Bussen D, Herold A. Prospective pilot study of anorectal fistula closure with the OTSC Proctology. Color Dis. 2015;17(1):81-6. https://doi.org/10.1111/codi.12762.