

https://dspace.org/

Lesser metatarsophalangeal joint replacement arthroplasty for degenerative joint disease: development in vitro of a new design

Saragas, Nikiforos Pandelis

2019

https://hdl.handle.net/10539/29728

Saragas, Nikiforos Pandelis, Lesser metatarsophalangeal joint replacement arthroplasty for degenerative joint disease,University of the Witwatersrand, Johannesburg, <http://hdl.handle.net/10539/29728>

Downloaded from a DSpace repository. https://dspace.org/

LESSER METATARSOPHALANGEAL JOINT REPLACEMENT ARTHROPLASTY FOR DEGENERATIVE JOINT DISEASE

Development in vitro of a new design

Nikiforos Pandelis Saragas

Student Number: 770918/2

A thesis submitted to the Faculty of Health Sciences, University of the Witwatersrand, in fulfilment of the requirements for the degree of Doctor of Philosophy

Johannesburg, 2019

DECLARATION

I, Nikiforos Pandelis Saragas, declare that this thesis is my own unaided work. It is being submitted for the degree of Doctor of Philosophy at the University of the Witwatersrand, Johannesburg. It has not been submitted before for any degree or examination of this or any other University.

N P Saragas  Date: 19 March 2019

I certify that the studies contained in this thesis have the approval of the Human Research Ethics Committee of the University of the Witwatersrand, Johannesburg.

Human Research Ethics Committee (Medical):

Ref: W – CJ – 140813-1 (13-08-2014)

Johannesburg, . WITS UNIVERSITY

Professor Nikiforos Pandelis Saragas (Candidate)

Professor Faith Bischof, MSc (Physio), PhD (Wits) (Supervisor)

Professor Paul (Ponky) Firer, M Med (Ortho Surg.) (Wits) (Supervisor)

Dr Malan de Villiers, BSc (Mech) Eng (Pretoria),

BEng (Hons) Mech (Pretoria), MEng (Pretoria), PhD (Supervisor)

DEDICATION

By the Grace of God and the unwavering love and support of my family, Evanthia (my wonderful wife), Aliki and Maria (my beautiful daughters), I have reached this milestone in my career.

To my late brother, George Saragas who was instrumental in sowing the seed for a PhD.

To my parents, Aliki and Photios Saragas who gave me the foundation and opportunities. Without whom, I would not be where I am today.

ABSTRACT

LESSER METATARSOPHALANGEAL JOINT REPLACEMENT ARTHROPLASTY FOR DEGENERATIVE JOINT DISEASE

N P Saragas

Background

Isolated lesser metatarsophalangeal joint arthritis is often post traumatic or due to Freiberg's infraction. The condition is initially treated conservatively with modification of life style, non-steroidal anti-inflammatory agents, orthotics and even intra-articular hydrocortisone injections. When conservative treatment is no longer effective, surgery is considered as the condition can become very debilitating. This is an in vitro study of a new design replacement arthroplasty.

Methods

A three component joint replacement implant was developed following accurate skeleton measurements. Fifteen fresh frozen cadaver feet were utilized over a period of four years. The implant evolved in its design until finally the last four implanted devices were tested for mobility and stability using custom made equipment. Once the surgical technique was perfected, a further two devices were implanted by an independent surgeon to establish the surgical reproducibility. Furthermore, the implant was subjected to dynamic wear and fatigue testing in the laboratory under various compressive forces.

Results

Cyclical loading for wear and tear under physiological forces showed almost no sign of wear or surface deformation after 5 million cycles. Range of motion was well within the functional

range and the implant was stable with forces in both dorsiflexion and dorsal displacement beyond the described forces for disrupting the joint. The surgical technique was found to be reproducible.

Conclusion

This novel lesser metatarsophalangeal joint replacement arthroplasty has been developed to fill the void of surgical options in the isolated arthritic lesser metatarsophalangeal joint. This implant is the basis for clinical trials.

ACKNOWLEDGEMENTS

My Supervisors:

- Prof Faith Bischof for her invaluable guidance. Her vast experience in supervising and assessing post graduate research projects has shaped this thesis to its final stage.

- Dr Malan De Villiers with his in-depth knowledge of bio-engineering and implant development has been instrumental in assisting me and manufacturing the device.

- Prof Paul (Ponky) Firer, who has been my mentor from early on in my career and still is. Always available to advise me in all spheres of orthopaedics and in particular in his knowledge of implants.

My Colleagues:

- Dr Paulo Ferrao – I count myself fortunate to have him as a friend, colleague and clinical partner. Although he can be my worst critic, his critiquing, input and help is invaluable!

- Mr Neville Jansen and Southern Medical for the professional design and manufacturing of the implants. To Neville in particular with his easy manner, who obliged me with all my whims and demands without any complaints making my ideas and design into reality.

- Mr Chris McDuling from CSIR who went out of his way in the manufacturing of the cyclical testing instrumentation, his input and testing itself. He went beyond the call of duty to help me.

- My past foot and ankle fellows, Dr Andrew Strydom, Dr Mohamed Ali Khademi and Dr Colette van Elst, who besides their input have helped me with the cadaver labs.

- The curator Mr Brendon Billings of the anatomical museum at the University of the Witwatersrand for arranging appropriate skeletons for me.

- The committee of the University of the Witwatersrand Faculty of Health Sciences' higher degrees for approving my Doctor of Philosophy title.

- Smith & Nephew for allowing me the use of their wet labs and cadavers. Thank you to Phindi, Andy and all the KZN staff for helping me with the cadaver testing.

- My long term friend, PA and Practice Manager Mrs Wendy Leppan whose typing skills and deciphering my handwriting is beyond compare.

- My PA Mrs Henriette Bezuidenhout who always organises my life at work to fit in the PhD as well.

- Dr Maxwell Jingo for his advice, editing and final touches.

TABLE OF CONTENTS

		PAGE
CANDIDATE'S DECLARATION		ii
DEDICATION		iv
ABSTRACT		v-vi
ACKNOWLEDGEMENTS		vii-viii
TABLE OF CONTENTS		ix-xiii
LIST OF FIGURES		xiv-xvii
LIST OF TABLES		xviii
1.0	INTRODUCTION	1
1.1	Anatomy of the lesser metatarsophalangeal joints of the foot	1
1.1.1	Metatarsal	1-3
1.1.2	Phalanx	3
1.1.3	Sesamoids	3
1.1.4	The phalangeal apparatus	3-4
1.1.5	Metatarsophalangeal ligaments of the lesser toes	4
1.2	Biomechanics	4-6
1.2.1	The metatarsophalangeal break	6-7
1.2.2	Toe motors and function	8-9
1.2.3	The "windlass" mechanism	9
1.2.4	Load transmission of the foot	9-11
1.2.5	Standing and pressure distribution	11

1.3 The gait cycle 12-14

1.4 Shock absorbing characteristics of the heel and ball of the foot 14-15

2.0 LITERATURE REVIEW 16

2.1 Freiberg's infraction 16-17

2.2 Treatment 18

2.2.1 Conservative 18-19

2.2.2 Current surgical treatment modalities 19

2.2.2.1 Open joint debridement 19

2.2.2.2 Arthroscopic joint debridement 19-20

2.2.2.3 Metatarsal osteotomies 20-21

2.2.2.4 Core decompression and micro-fracture 21-22

2.2.2.5 Excisional and interpositional arthroplasty 22-23

2.2.2.6 Peri-chondral grafting and osteochondral transplantation 23-24

2.2.2.7Allograft reconstruction 24-25

2.2.2.8 Replacement arthroplasty 25-27

2.2.2.9 Arthrodesis 27

2.3 Degenerative joint disease and dislocation of the lesser metatarsophalangeal Joint 27-28

3.0 THE CONCEPT: DEVELOPMENT OF THE LESSER METATARSOPHALANGEAL JOINT REPLACEMENT ARTHROPLASTY 29

3.1 Background 29

3.2 Design of a new metatarsophalangeal joint replacement arthroplasty 29-30

3.2.1 Three component design 30
3.2.2 High conformity/low constraint 30-31
3.2.3 Intramedullary fixation 31
3.3 The material 31
3.3.1 Titanium 31-32
3.3.2 Titanium Nitride (Ti-N) coating 32
3.3.3 Cross-linked high density polyethylene (UHMWPE) 32-34
3.4 Requirements of an arthroplasty pertaining primarily to the lesser metatarsophalangeal joint 34-35
3.5 Methods 35
3.5.1 The prosthesis design 36
3.5.2 The fixation 36-37
3.5.3 The curvature of the articular surface 37
3.5.4 Material 37-39

4.0 MATERIALS AND METHOD 40
4.1 Collection of data 40-45
4.2 Cadavers 45
4.3 Surgical technique 45-46
4.4 Range of motion measurement and stability 46
4.5 Dynamic wear and fatigue testing 46-47

5.0 THE EARLY DESIGN AND THE IMPLANTATION OF A PROTOTYPE LESSER METATARSOPHALANGEAL JOINT REPLACEMENT ARTHROPLASTY IN FRESH CADAVERS 48
5.1 Hand drawings 48-50
5.2 Computer generated diagram of the implant concept 51

5.3 Computer generated drawings of the early design 52-55
5.4 Photographs of the implant/cadaver 56

6.0 INITIAL CADAVER STUDIES – PROBLEMS ENCOUNTERED 57-61

7.0 DESIGN OF FIRST REVISED IMPLANT AND CADAVER TRIAL 62
7.1 Computer generated diagrams of new design implanted in cadaver 62-67
7.2 Conclusion 67-68
7.3 Second revised implant – phalangeal component 68

8.0 DESIGN OF FINAL IMPLANTS AND CADAVER TRIALS 69
8.1 Description of the implant 69
8.1.1 Metatarsal component 69-71
8.1.2 Polyethylene meniscus 71-72
8.1.3 Phalangeal component 73
8.1.4 The complete lesser metatarsophalangeal joint 74
8.1.5 Instrumentation 74-77
8.2 Cyclical testing in the laboratory 78-82
8.3 Cadaver testing/trials 83-85
8.3.1 Surgical technique 86-98
8.3.2 Range of motion measurements 99-100
8.3.3 Stability 101-103

9.0 RESULTS 104
9.1 Cyclical loading 104-112

9.2 Range of motion 113-114

9.3 Clinical stability 114-115

9.4 Lesser metatarsophalangeal joint stability with 5 kg force (49 N) 115-116

10.0 DISCUSSION 117-118

11.0 CONCLUSION 119

12.0 REFERENCES 120-125

13.0 APPENDICES 126

A: Ethics approval 127

B: Acceptance of proposal 128

C: Permission from the University of the Witwatersrand Anatomy Department 129

D: Permission from Wolters Kluwer Publishers for reproducing published Material 130

E: Permission from Elsevier Publishers for reproducing published material 131

F: Permission from Smith & Nephew for the use of their cadavers and laboratory 132

G: Permission from Arthrex for the use of their cadavers and laboratory 133

LIST OF FIGURES

Figure 1 Metatarsals II – V from the Dart Collection - University of the Witwatersrand……2

Figure 2 Inclination angles of the metatarsal shafts I – V relative to the ground (Viladot Perice A: *PatologiadelAntepie*, P4. Ediciones Toray, SA – Barcelona, 1974) With permission from Shahan K Sarrafian: Anatomy of the Foot and Ankle Descriptive Topographic Functional, 2nd Edition.Philadelphia, J.B. Lippincott Company, © 1993……..5

Figure 3 The Metatarsophalangeal Break (Isman RE, Inman VT: *Bull Prosthet Res* 10:97, 1969.) with permission from Coughlin M J, Mann R A, Saltzman C L (eds): Surgery of the Foot and Ankle 8th Edition. Philadelphia, Elsevier, © 2007……7

Figure 4 Lateral view of the extensor mechanism (with permission Coughlin M J, Mann R A, Saltzman C L (eds): Surgery of the Foot and Ankle 8th Edition. Philadelphia, Elsevier, © 2007)…….....9

Figure 5 The truss mechanism of the foot (with permission from Shahan K Sarrafian: Anatomy of the Foot and Ankle Descriptive Topographic Functional, 2nd Edition. Philadelphia, J.B. Lippincott Company, © 1993…….....11

Figure 6 Axes of the push-off (with permission from Shahan K Sarrafian: Anatomy of the Foot and Ankle Descriptive Topographic Functional, 2nd Edition Philadelphia, J.B. Lippincott Company, © 1993…….13

Figure 7 Freiberg's infraction (and degenerative joint disease of the second metatarsophalangeal joint)…….....17

Figure 8a Metatarsal II head measurements (skeleton)…….....41

Figure 8b Metatarsal III head measurements (skeleton)……...42

Figure 8c Second toe proximal phalanx measurements (skeleton)……..43

Figure 8d Third toe proximal phalanx measurements (skeleton)…….44

Figure 9a Initial drawings of the lesser metatarsophalangeal joint replacement arthroplasty (metatarsal component)…….....49

Figure 9b Initial drawings of the lesser metatarsophalangeal joint replacement arthroplasty (phalangeal component)……...50

Figure 10 Computer generated diagram of the implant concept……..51

Figure 11a Computer generated drawings of the early design technical (metatarsal component)……...52

Figure 11b Computer generated drawings of the early design technical (phalangeal component)……...53

Figure 11c Computer generated drawings of the early design technical (meniscus).....54

Figure 11d Computer generated drawings of the early design……...55

Figure 11e Computer generated drawings of the early design……...55

Figure 12 Photographs of the implant and in situ cadaver……...56

Figure 13 Superior edge of metatarsal component projecting beyond the bone……..57

Figure 14 Diagrams for improving the phalangeal component…….....59

Figure 15 Improving the radius of the metatarsal component…….....61

Figures 16a Computer generated drawings of first revised implant (metatarsal component)……...63

Figures 16b Computer generated photograph of first revised implant (metatarsal component)……...64

Figures 16c Computer generated photograph of first revised implant (metatarsal component)……...65

Figures 16d Computer generated photograph of first revised implant (metatarsal and phalangeal component)…….....66

Figure 17 First revised implant in cadaver……...67

Figure 18 Second revised implant-technical (phalangeal component)…….....68

Figure 19a Final computer generated drawings of implants technical (metatarsal component)…….....70

Figure 19b Final computer generated drawings of implants technical (meniscus)……72

Figure 19c Final computer generated drawings of implants technical (phalangeal component)……...73

Figure 20 Final implants……...74

Figure 21a Instrumentation-technical…….....75

Figure 21b Instrumentation-technical…….....76

Figure 21c Instrumentation…….....77

Figure 22a Cyclical testing instrumentation-set up……78

Figure 22b Cyclical testing instrumentation……...79

Figure 22c Cyclical testing instrumentation-close up of housing……..80

Figure 22d Cyclical testing instrumentation-devices in the housing…….....81

Figure 23 The SI unit of force is Newton (N), which is defined as the force required to impart an acceleration of one meter per second squared to a mass of one kilogram. From Newton's second law (F = ma), therefore 1 newton = (1 kg) x (1 metre per second squared). For engineering purposes the unit of acceleration "a" is 9.81 m/s^2. Example: 40 N = 4.077 kg x 9.81 m/s^2……...82

Figure 24a Cadaver testing set up……..83

Figure 24b Cadaver testing set up……..84

Figure 25 Hallux disarticulated……85

Figure 26a Surgical technique-incision…….....87

Figure 26b Surgical technique-joint exposed by cutting the capsule between the extensor Tendons……....88

Figure 26c Two-three millimetres are taken off the base of the proximal phalanx…….....89

Figure 26d Guide wire placed in the metatarsal…….....90

Figure 26e Cannulated reamer over the guide wire……91

Figure 26f Metatarsal head prepared…….....92

Figure 26g Metatarsal component in place…….....93

Figure 26h Phalangeal component and polyethylene insert in place…….....94

Figure 26i Complete lesser metatarsophalangeal replacement in situ…….....95

Figure 26j Skin closed……...96

Figure 27a Radiographic appearance of the implant (antero-posterior)……....97

Figure 27b Radiographic appearance of the implant (lateral)……98

Figure 28a Electrogoniometer for range of motion measurement…….....99

Figure 28b Electrogoniometer for range of motion studies……..100

Figure 29 Screw implanted in proximal phalanx for the purpose of stability studies……101

Figure 30a Stability testing at various weight force……102

Figure 30b Stability testing at various weight force……103

Figure 31a Wear of contact surfaces pre and post testing at 500 000 cycles……...105

Figure 31b Wear of contact surfaces pre and post testing after 5 000 000 cycles excessive forces….....107

Figure 32a The four new devices prior to testing……109

Figure 32b The four implants after completing 5 000 000 cycles at physiological forces…….…….…….....110

Figure 32c The four implants each with the respective compressive forces as well as the sizes after completing 5 000 000 cycles at physiological forces……111

Figure 32d Close up of the implants after completing 5 000 000 cycles at physiological forces……..112

LIST OF TABLES

Table 1 : Measurements pre and post endurance testing after 5 000 000 cycles at ± 10 x physiological forces……106

Table 2 : Measurements pre and post endurance testing after 5 000 000 cycles at physiological forces……109

Table 3 : Range of motion pre and post implant……...113

Table 4 : Average range of motion pre and post implant……..114

Table 5 : Clinical stability pre and post implant……115

Table 6 : Stability with 5 kg (49 N) force pre and post implant……116

1.0 INTRODUCTION / BACKGROUND TO STUDY

Degenerative arthritis of the lesser metatarsophalangeal joint in the foot is a relatively uncommon condition as compared to the inflammatory arthritides. Often the arthritis is isolated to one joint and commonly due to past trauma or Freiberg's infraction. The condition is initially treated conservatively with modification of lifestyle, non-steroidal anti-inflammatory agents, orthotics and even intra-articular hydrocortisone injections. When however, conservative treatment is no longer effective, surgery is considered as the condition can become very debilitating.

Long term results with current surgical procedures are poor. With the advent of new technology in the field of joint replacement arthroplasty, a device for replacing the degenerative lesser metatarsophalangeal joint (LMTPJ) should be revisited. In this day and age the researcher believes that there is a need to include such a device in the foot and ankle surgeon's armamentarium for the treatment of this affliction.

1.1 Anatomy of the lesser metatarsophalangeal joints of the foot

Sound knowledge of the anatomy, physiology and biomechanics is imperative in the design of an implant.

1.1.1 Metatarsal

Each metatarsal is formed by a base, a head and a shaft. All the metatarsal heads are of different size and shape but have inherently a similar basic structure. The condylar articular surface extends more on the plantar aspect than dorsally to accommodate plantar flexion of the toes.[1,2]

The plantar articulation has a central concave border with two proximal extensions, the lateral one being more pronounced. Just proximal to the articular surface of the metatarsal head and separated by a groove, there is a pronounced medial and lateral tubercle where the origin of the metatarsophalangeal and metatarsoglenoid ligaments is found.

From a lateral profile, the metatarsal head has an elliptical articular contour and the lateral tubercle is superior. From the dorsum, the narrow neck is seen to flare up into the lateral tubercle[1,2] (see **Figure 1**).



Figure 1 Metatarsals II-V from the Dart Collection-University of the Witwatersrand

The transverse metatarsal ligament is found between the metatarsal heads II – V. The insertion of the transverse part of the adductor hallucis muscle provides anchorage of metatarsal I to the

other metatarsals. The metatarsophalangeal joints (MTPJs) lie 2 – 3 cm proximal to the webs of the toes.

These joints are stable due to the rounded heads fitting deeply into the concave proximal facets of the proximal phalanges. This stability is further augmented by the ligaments[2]. The five MTPJs together with their phalangeal chains form five separate non-constraint mechanisms.

1.1.2 Phalanx

The base of the proximal phalanx of the lesser toe is large in the transverse plane with an oval articular surface for the metatarsal head. Two plantar tubercles are note for the attachment of the interossei muscles and metatarsophalangeal ligaments. The lateral tubercle of the little toe gives insertion to the abductor digiti minimi and the flexor digiti minimi brevis[1].

1.1.3 Sesamoids

On the rare occasion, sesamoids of the lesser toes are present. These are connected to the intrinsic muscles[1].

1.1.4 The phalangeal apparatus

The proximal phalanx of the fibrocartilaginous plantar plate (plantar aponeurosis and joint capsule) form an anatomic and functional unit. These are suspended from the sides of the metatarsal head through the collateral and the suspensory glenoid ligaments. The deep transverse intermetatarsal ligament connects the plantar plate on each side.

The plantar plate gives insertion to the fibrous flexor tendon sheath on its plantar side, whereas on its dorsal aspect it gives insertion to the accessory collateral ligament or the metatarsoglenoid suspensory ligament and the corresponding interossei muscles at the junction of the deep transverse intermetatarsal ligament with the plantar plate[1].

This phalangeal apparatus (proximal phalanx, the plantar plate and insertional connections) is the main articular unit of the ball of the foot.

1.1.5 Metatarsophalangeal ligaments of the lesser toes

The lateral ligaments are divided into:

1) The metatarsophalangeal collateral ligaments which originate on the lateral tubercle of the metatarsal head. These are directed downward and anteriorly and insert on the lateral tubercle of the base of the proximal phalanx.

2) The metatarsoglenoid ligament or suspensory ligaments which originate from the postero-inferior aspect of the lateral metatarsal tubercle of the head. Its fan shaped fibres descend vertically in the posterior part and obliquely in the anterior part and insert on the lateral border of the plantar plate. They are also in continuity with the lower borders of the metatarsophalangeal collateral ligament. The lateral ligaments on the peroneal side are thicker and stronger than those on the tibial side[1].

1.2 Biomechanics

The lesser metatarsal shafts are inclined at various angles relative to the ground[1] (see **Figure 2**). The inclination determines the neutral position at the MTPJ. This inclination angle decreases from metatarsal I to metatarsal V.

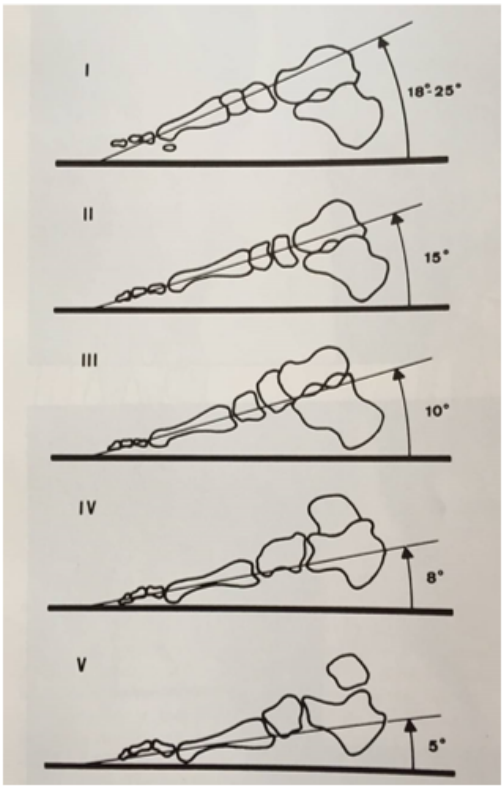

Figure 2 Inclination angles of the metatarsal shafts 1-V relative to the ground (Viladot Perice A: *Patologia del Antepie*, P4. Ediciones Toray, SA-Barcelona, 1974) with permission from Shahan K Sarrafian: Anatomy of the Foot and Ankle Descriptive Topographic Functional, 2nd Edition. Philadelphia, J.B. Lippincott Company, ©1993

Radiologically, in the weight bearing position, Scheck noted the average dorsiflexion angle of the proximal phalanx of the 2nd toe to be 23.5° in the young male and female adults (20 – 30 years) and 33° and 38° in the older male and female (50 – 70 years) respectively[1]. Kelikian showed that there is a gradient of flexion-extension present and "the flexion of the toes at the MPJs gains greater range from the medial to the lateral border. The converse occurs in extension"[1].

In 10 normal cadaveric feet, Myerson and Shereff found that the extension decreases little while the flexion increased from the 2nd to the 5th toe at the MTPJ[1].

Average range of motion of the metatarsophalangeal joint in normal 2nd and 3rd toes is 25° – 80° and 25° – 75° respectively[1].

The toes work in unison. The initial phase of the push-off, during gait, occurs around an oblique axis passing through the metatarsal heads II – V. This determines the metatarsal break angle, which measure 62° on average, relative to the mid axis of the foot passing through the 2nd interdigital space[3]. The subsequent phase of the push-off occurs around the transverse axis passing through metatarsal heads I and II[1,4].

1.2.1 The metatarsophalangeal break

The axis from the first to the fifth metatarsal heads which forms during toe-off is known as the metatarsal break. It represents the instant centres of rotation of each of the five MTPJs. The appearance of an oblique crease in the area overlying the metatarsophalangeal articulation in a new pair of shoes is the result of the unequal forward extension of the metatarsals. The head of metatarsal II is the most distal and that of V, the most proximal[5].

At the time of push-off, the weight of the body is normally distributed along all the metatarsal heads. The foot must therefore supinate slightly and deviate laterally. The oblique crease proves that those motions occur with every step. The angle between the metatarsophalangeal break and the long axis of the foot can vary between 50° – 70° (see **Figure 3**).

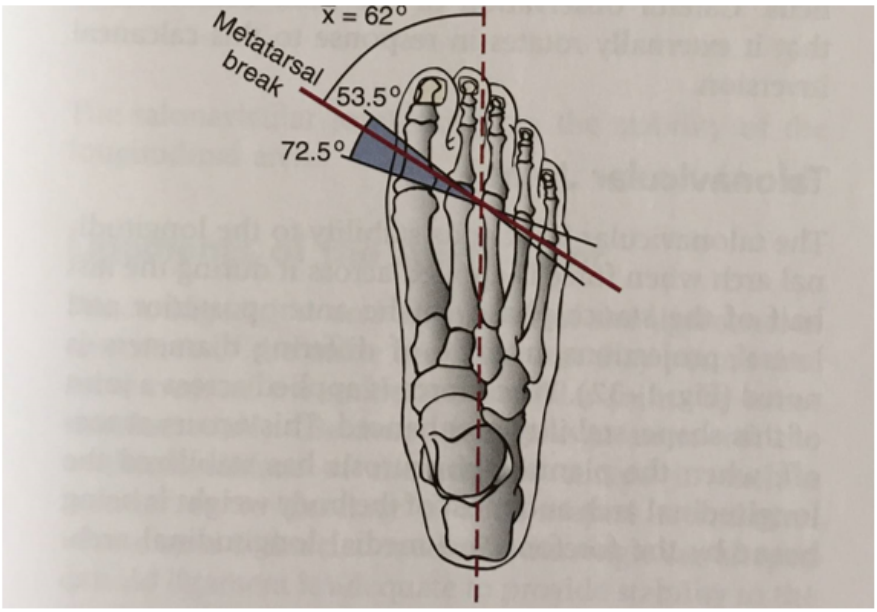

Figure 3 The Metatarsophalangeal Break (Isman RE, Inman VT: *Bull Prosthet Res* 10:97, 1969.) with permission from Coughlin MJ, Mann RA, Saltzman CL (eds): Surgery of the Foot and Ankle 8th Edition. Philadelphia, Elsevier, © 2007

To permit the leg to remain in a vertical plane during walking, the subtalar joint provides the articulation between leg and foot[4].

With heel raise, the dorsiflexion of the toes tightens the plantar aponeurosis and assists in inversion of the heel. This supinatory twist “locks” the foot converting a flexible foot into a rigid lever[4].

1.2.2 Toe motors and function

In 1889, Ellis stated that "the principal function of the toes is to give good foot-hold by active pressure against the ground, so as to supplement the passive pressure of the body's weight"[6]. Furthermore, the toes participate in weight bearing and in tensing the plantar aponeurosis and the plantar skin during the push-off phase of the walking cycle. These last two functions are more effective with the first and second toes. The lesser toes' functional units are:

- the long and short extensors
- the long and short flexors
- the plantar and dorsal interossei
- the lumbricals
- the abductor and the flexor digiti quinti
- the deep sagittal band attachment of the plantar aponeurosis acting on the proximal phalanx and the plantar plate.

All tendons passing in dorsal direction to the axes of motion are extensors whereas tendons passing in plantar direction are flexors.

The long and short extensors pass dorsal to the axes of motion at the metatarsophalangeal and interphalangeal joints whereas the long and short flexors pass plantar. The plantar, dorsal interossei tendons and the lumbricals pass principally plantar to the axis of motion at the MTPJ.

When traction is applied on a tendon, it will act primarily at its firm attachment site then secondarily on the bridged joints.

A pull applied on the long extensor tendon results in a hyperextension of the proximal phalanx at the MTPJ through the "sling mechanism" of extension[4] (see **Figure 4**). The middle and distal phalanges remain slightly flexed.

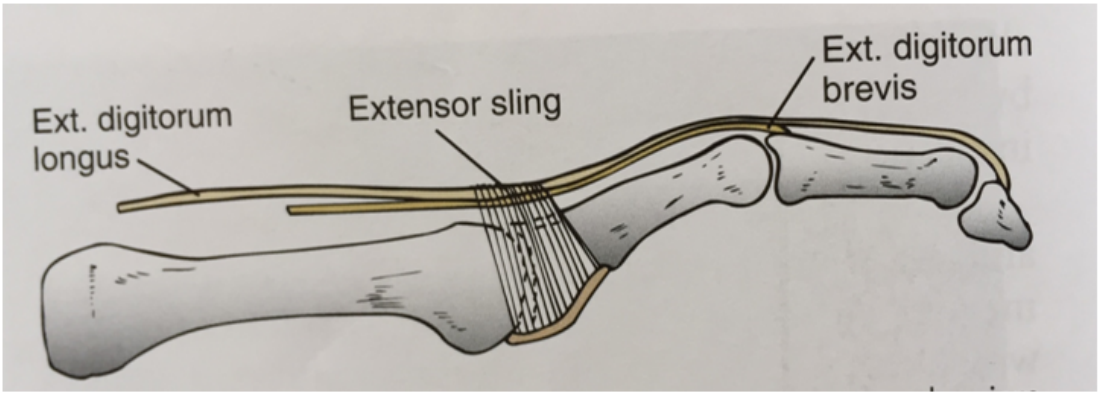

Figure 4 Lateral view of the extensor mechanism (with permission from Coughlin MJ, Mann RA, Saltzman CL (eds): Surgery of the Foot and Ankle 8th Edition. Philadelphia, Elsevier, © 2007)

Long flexor contraction results sequentially in flexion of the distal interphalangeal joint, proximal interphalangeal joint and MTPJ. The flexor digitorum brevis first flexes the proximal interphalangeal joint, then the MTPJ. The interossei and lumbricals will cause plantar flexion of the MTPJ and extension at the interphalangeal joints[1].

1.2.3 The "windlass" mechanism

With tension of the plantar aponeurosis by hyperextending the toes, the longitudinal arch of the foot is raised and the hind foot inverts. This is known as the "windlass" mechanism[1]. The metatarsal head is the drum of the windlass. Furthermore, extension of the MTPJs converts the ball of the foot into a firm pad that can resist shear forces and greatly reduce the skin mobility[1].

1.2.4 Load transmission of the foot

Several interrelated conditions play a role in loading the MTPJs. These include the angulation of the metatarsus with respect to the ground, distribution of the loads under each joint and the force components acting in compression, torsion and bending force[2].

Two longitudinal arches are recognised in the sagittal plane – a major medial and a more minor lateral longitudinal arch. A transverse arch is noted in the midfoot, forming a convex curve in the direction of the dorsum when looking at the plantar surface of a non-weight bearing foot. It disappears and flattens to varying degrees during weight bearing[7].

In the longitudinal plane, the foot is arranged in an arcuate fashion, being supported posteriorly through the calcaneus and anteriorly through the metatarsal heads. This weight bearing arcuate structure has been described by Lapidus as a "truss" (the separation of both ends is prevented by a tie-rod at the base). Both the anterior and posterior struts are subjected to compression by applying load at the apex. However, a tie-rod mechanism is provided by mainly the plantar aponeurosis to prevent bending by taking up the tension[8] (see **Figure 5**).

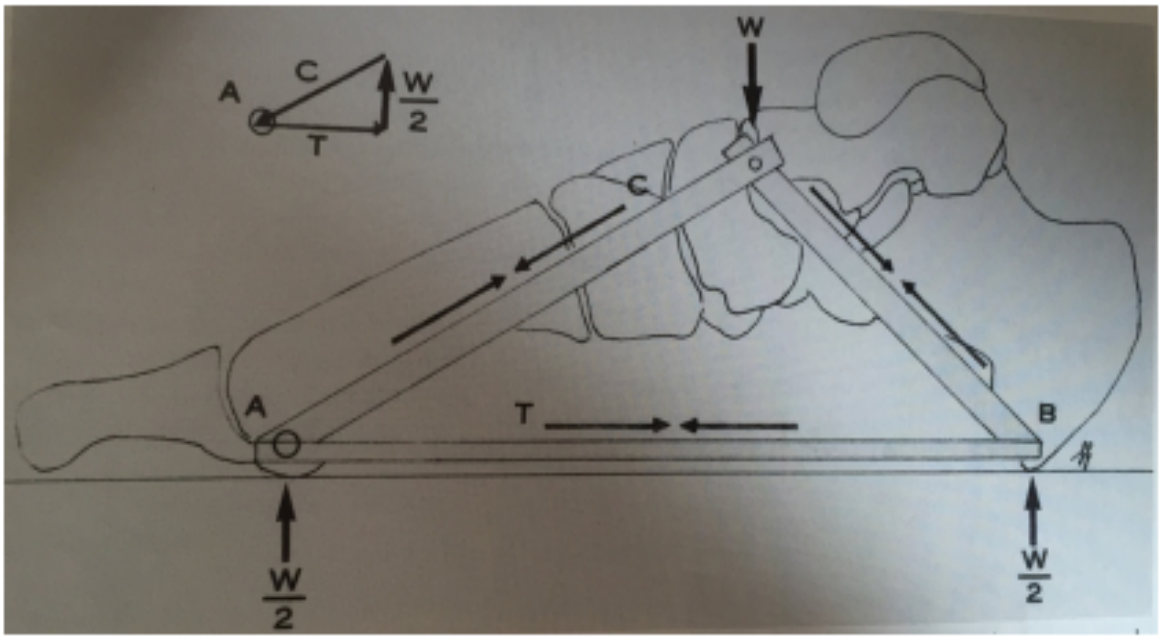

Figure 5 The truss mechanism of the foot. Under body weight (W), the struts are under compression (C) and the tie rod or plantar aponeurosis is under tension (T). Any joint for example point A, is in vectorial equilibrium, as indicated in the inset diagram, (with permission from Shahan K Sarrafian: Anatomy of the Foot and Ankle Descriptive Topographic Functional, 2nd Edition. Philadelphia, J.B. Lippincott Company, ©1993)

1.2.5 Standing and pressure distribution

Initial stability in the standing-at-ease position is provided by the passive structures in the feet. The muscles contribute during activity, such as takeoff[1]. It was shown by Cavanagh *et al*. that during barefoot standing, the regional distribution of the peak pressure was highest on the medial heel and the mean peak heel pressure was about 2.6 times greater than in the forefoot. The peak pressure under metatarsal head I was less than the corresponding pressure under metatarsal head II. The mean peak weight distribution was 60.5% on the heel, 7.8% in the midfoot, 28.1% in the forefoot (with emphasis over the lateral metatarsal heads) and 3.6% in the toes[9].

1.3 The gait cycle

Generally speaking, there is a support or stance phase and a swing phase. The stance phase, which occupies 62% of the cycle, starts with the heel strike and terminates with toe off. The swing phase, occupying 38% of the cycle, terminates with the next heel strike of the same foot[1].

With the foot flat, the toes are in neutral position at the MTPJ. The maximum dorsiflexion at the MTPJ is 50° – 60° during the push-off phase[1]. According to Bojsen-Møller, the heel rise and the push off takes place at the MTPJs around two primary axes, oblique and transverse. The heel rise occurs first around the oblique axis (which passes through the MTPJ of the 2nd – 5th toes. This is described as a low-gear motion (low speed, high power) for uphill walking with loads and in the first step of a sprint. The push-off follows around the transverse axis which passes through the MTPJs of the 1st and 2nd toes. This is a high-gear motion (high speed, low power) such as used for sprinting[10] (see **Figure 6**).

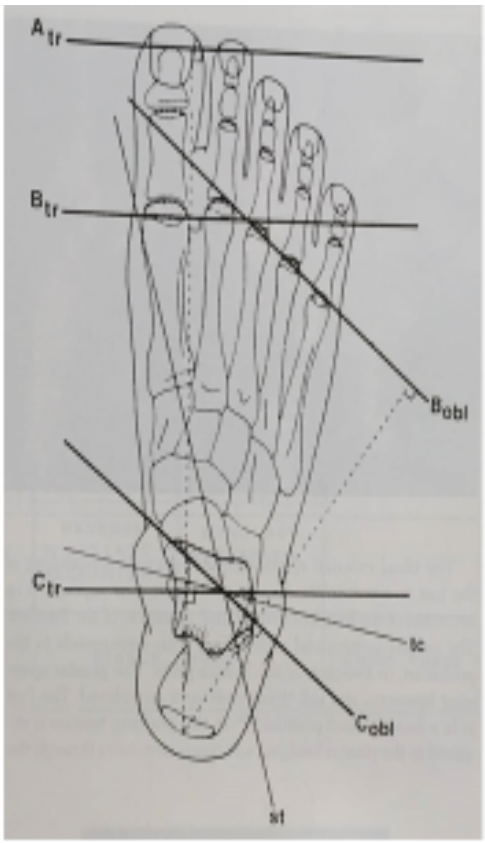

Figure 6 Axes of the push-off. The push –off is initiated along the oblique axis B_{obl} passing through the metatarsal heads 2 to 5 and continuing along the transverse axis B_{tr}, passing through the metatarsal heads 1 and 2 and terminating along the distal transverse axis A_{tr} passing through the tip of the big toe. The dorsiflexion of the toes is accompanied by a motion of the ankle complex involving the axes of the talocrural (*tc)* and subtalar (*st)* joints, resulting in a secondary axis C_{obl} or C_{tr} that is parallel to the primary axes (B_{obl}, *Btr,* or A_{tr}). The push-off along the oblique axis B_{obl} acts as a low-gear mechanism, whereas the push-off along the transverse axis B_{tr} acts as a higher-gear mechanism of take off, (Bojsen-Møller F, Lamoreux L: Significance of free dorsiflexion of the toes in walking. Acta Orthop Scand 50[4]:471, 1979, with permission from Shahan K Sarrafian: Anatomy of the Foot and Ankle Descriptive Topographic Functional, 2nd Edition. Philadelphia, J.B. Lippincott Company, © 1993)

Hutton *et al*. have shown that at 5% of the gait cycle, the load is concentrated on the heel and progressively shifts to the forefoot. At 30% of the cycle, the heel leaves the ground and the load is concentrated on the forefoot[1]. Initially, during the heel strike, the forces are directed downward and anteriorly and become progressively vertical at mid stance. Then they are directed downward and posteriorly at push off[1]. Normal pressures under the foot as studied by Betts *et al*., during walking did not exceed 10 kg/cm^2 with median values for metatarsal heads I – III being 3 kg/cm^2 – 4 kg/cm^2 and decreased laterally with a near peak value of 1 kg/cm^2 – 2 kg/cm^2 under the fifth metatarsal head[11].

Cadaveric studies have shown that an axial load of 45 N caused damage to the stabilizing soft tissue structure (*viz*: plantar plate, medial collateral ligaments, lateral collateral ligaments, extensor hood). The plantar plate is the main restraint for dorsal (superior) translation of the MTPJ[12].

Further cadaveric studies showed that an 8 mm of shift was required to dislocate the lesser MTPJ. Specifically, the superior (dorsal) subluxation stability of the intact second and third toes averaged 3.13 ± 1.72 N/mm and 3.10 ± 1.54 N/mm respectively. The dorsiflexion stability of the intact second and third toes averaged 2.17 ± 0.42 N/mm and 1.92 ± 0.61 N/mm respectively. The plantar flexion stability of the intact second and third toes averaged 0.44 ± 0.12 N/mm and 0.36 ± 0.05 N/mm respectively[13].

1.4 Shock absorbing characteristics of the heel and ball of the foot

An individual weighing 68 kg walking one mile, generates a total force of 63.5 tons to be absorbed by one foot against the ground. One hundred and ten tons are generated with running over the same distance. The heel pad and the ball of the foot in particular, are constructed to function as efficient shock absorbers in order to avoid injuries to bones, joints, the brain and vision due to jarring[1]. Bojsen-Møller and Flagstad state that "In the relaxed state, the ball of the foot is a soft and pliable pad….

However with the toes extended and abducted, as during the push-off, the ball becomes tense and firm and no movement of the skin is allowed", and further stated "this stiffening ensures that shear forces resulting from accelerations, decelerations or twists are not carried by the skin alone but are conveniently taken up by the underlying connective tissue frame and transferred to the skeleton" [14]. Bojsen-Møller and Flagstad also found that a large amount of dorsiflexion

(35° – 40°) of the toes was needed to achieve a 50% restriction of the skin displacement, thus preventing shear forces from damaging the skin.[14]

2.0 LITERATURE REVIEW

Degenerative arthritis of the lesser MPJ in the foot is a relatively uncommon condition as compared to the inflammatory arthritides. Often the arthritis is isolated to one joint and commonly due to previous trauma or Freiberg's infraction. Currently there is no effective replacement available. These joints are subject to severe repetitive fatigue loading over small articulating surfaces through large arcs of movement.

The only surgical procedures which are used even in this day and age are debridement of the joint, realignment osteotomies of the metatarsal and excision arthroplasty either of the involved metatarsal head or of the base of the proximal phalanx with or without associated syndactyly of the toes. Excision of the involved (single) lesser metatarsal head is not advisable as it can lead to a transfer lesion to the adjacent metatarsal head creating metatarsalgia and consecutive resection of the remaining metatarsal heads in a 'domino' fashion. Excising the base of one or two adjacent proximal phalanges, is mutilating with unpredictable results. Realignment osteotomies are limited in their use. Arthrodesis is not an option. Adopting Swanson silicone implants from hand surgery has shown to be disastrous as they all fail with the development of granulomas and extensive resorption of bone.

2.1 Freiberg's Infraction

Freiberg's infraction (a relatively rare condition) was initially described in 1914 in a small series of six cases[15] (see **Figure 7**).



Figure 7 Freiberg's infraction (and degenerative joint disease of the second metatarsophalangeal joint)

Infraction was used due to the history of associated minor trauma to the foot. Other terms, such as "egg shell" fracture, peculiar characteristic metatarsal disease, metatarsal epiphysitis, Osteochondritis deformans, metatarsojuvenilis and "malakopathie" have been historically used. Smillie classified the disease into five stages, depending on the progression of the metatarsal head deformity, culminating in arthrosis[16-18].

Although trauma and circulatory disturbances are likely contributing causes in its development, it is now widely accepted that Freiberg's aetiology is multifactorial[19-21]. The condition has a definite predilection for the second metatarsal head.

2.2 Treatment

2.2.1 Conservative

As with all symptomatic degenerative joint disease (DJD), initial treatment is non-operative in the early stages of the disease and consists of the control of symptoms and the prevention of deformity. These include:

- Orthotics and shoe wear modification
- Painkillers and non-steroidal anti-inflammatory agents
- Modification of lifestyle
- Intra-articular hydrocortisone injections
- Weight loss
- Biokinetics for strengthening exercises

There is insufficient evidence to support one treatment modality over another. Conservative treatment is often temporary; however, as degeneration escalates, symptoms progress and surgical intervention is warranted[16,20,22-25].

As in the case of primary articular osteochrondroses, an initial protected mobilization phase is followed by progressive functional activity. Up to 3 years or even longer may be required in the symptomatic patient[26].

Palamarchuk and Oerlein reported the successful treatment of a female collegiate heptathlete with Freiberg's infraction by the use of custom-made orthoses[22]. This differs from Sproul *et al*., who in a retrospective study had to resort to surgical treatment of Freiberg's infraction in athletes most of whom had some form of non-operative intervention initially[23].

Thirteen of 28 patients in a study by Smith *et al*. improved with either an insole or application of plaster cast[25]. Alendronate has been used successfully in preventing early collapse of the femoral head with non-traumatic osteonecrosis. This treatment, however, has not been used in patients with Freiberg's infraction[27].

2.2.2 Current surgical treatment modalities

The surgical treatment can be divided into

(a) Procedures that alter the pathophysiology and abnormal biomechanics. These include core de-compression and corrective metatarsal osteotomy.

(b) Procedures that restore articular congruity or address the degenerative features. These include debridement, osteotomy, grafting and arthroplasty[16].

2.2.2.1 Open joint debridement

This is probably the most common first-line surgical option. It is safe, predictable and successful[24]. This involves excision of the thickened synovium, removal of loose bodies and unstable articular cartilage and resection of osteophytes[15,17,18,23]. Debridement may be performed in combination with other procedures such as metatarsal osteotomies and micro-fracture, as indicated (see below).

2.2.2.2 Arthroscopic joint debridement

Maresca *et al*., described a case of a 28 year old male with bilateral (even more rare) involvement. They performed bilateral arthroscopic treatment with joint debridement and

drilling of the metaphyseal portion of the distal metatarsal head bilaterally. At their last evaluation, 2 years post-operatively, the patient was symptom free with satisfactory restructuring of the lesions on MRI[21]. These were only two case studies and thus insufficient data to support arthroscopic debridement in Freiberg's disease[16].

2.2.2.3 Metatarsal osteotomies

a) Shortening metatarsal osteotomies

As early as 1991, Smith *et al*. used metatarsal shortening for the treatment of Freiberg's disease. Fifteen patients (16 feet) were reviewed between 2 – 7.5 years following metatarsal shortening. Most were graded as excellent and pleased with one patient being unhappy with the result. There were two complications: A sinus that had developed several months after removal of the plate and the other was a broken plate. Both cases settled uneventfully. Persistent stiffness of the MTPJs remained in most patients[25].

Barouk used the Weil distal metatarsal shortening osteotomy since 1992 for metatarsalgia. He too found it a reliable and efficient procedure with the disadvantage being limitation of the MTPJ articular range of motion[28].

b) Dorsiflexion osteotomies

The rationale behind dorsiflexion osteotomies is to bring the healthy plantar part of the metatarsal head into articulation with the phalanx. Kinnard and Lirette retrospectively reviewed the results of 10 patients who had an intra-articular dorsiflexion osteotomy. Results were excellent in all patients. They found it to be a reasonable treatment for symptomatic Freiberg's disease. It is reliable and not destructive[29]. In a further study they obtained excellent results with minimal loss of MTPJ motion in 15 patients at an average follow-up of 50 months[30].

Gauthier and Elbaz successfully treated Freiberg's infraction in a series of 53 cases[31]. After an average follow-up period of 40 months, Chao *et al*. had excellent results in 13 patients with Freiberg's disease, following an extra articular dorsal closing wedge osteotomy. They used temporary cross-pinning for fixation[32].

Similar results were obtained by Capar in 19 patients. They had good and excellent results in 16 patients at a mean follow-up period of 41 months. One patient developed aseptic necrosis. The mean shortening in the metatarsal length was 1.6 mm[33].

Lee *et al*. used an absorbable (polyglycolide) pin to fix the intra articular dorsal wedge osteotomy in 12 patients. The mean follow-up was 45 months. The osteotomies healed at an average of 10 weeks. Whereas most of the previous studies had some loss of MTPJ motion, they found an increase in the range of the MTPJ motion by a mean of 26°. Pain measurement of a visual analogue scale had improved from an average of 8.0 to 2.3. All patients were satisfied with the results[34].

Katcherian goes as far as to say that "the dorsiflexion osteotomy of the metatarsal head is a logical procedure that is simple, reliable, not destructive and capable of good results regardless of the stage of the disease" [19].

2.2.2.4 Core decompression and micro-fracture

Micro-fracture of the metatarsal head and reattachment of the cartilage flap was first described by Pastides *et al*. They performed this procedure in 11 patients with late-stage Freiberg's disease. Mean follow-up period was 49 months. All patients reported a significant reduction of pain at rest and on mobilizing. The advantage is that it causes no metatarsal shortening or any other anatomical abnormalities in the area[35].

Surgical core decompression has been used to prevent structural changes in the metatarsal head and to relieve pain by decreasing the increased intraosseous pressure associated with avascular necrosis and promoting re-vascularization of the necrotic area. Long term studies however, are needed as to its efficacy. Results of the above technique were presented in two separate case reports. Both patients had no structural changes in the metatarsal head on X-ray at 5 year and 14 month follow-up respectively[36,37].

2.2.2.5 Excisional and inter-positional arthroplasty

Excisional arthroplasty alone should not be used in Freiberg's infraction as this leads to residual symptoms and deformities, transfer metatarsalgia and gait disturbance[38,39]. The combination of periarticular excision with inter-positional arthroplasty procedure in the treatment of degenerative arthritis of the lesser MTPJ may overcome many of the complications and there is fair evidence to support it for late stage Freiberg's disease[16].

Several tissues may be utilized. Thompson and Hamilton use flexor to extensor transfer (Girdlestone) with excellent results in 10 of 12 patients[40]. Good or excellent results were also found in eight out of nine patients by Lavery and Harkless at an average follow-up period of 35.5 months[38].

el-Tayeby used the extensor digitorum longus tendon. The deformed head was bevelled on its plantar aspect to provide a smooth weight bearing surface covered by a tendon tissue cushion. Eleven of 13 patients described the final outcome as excellent and good after 11 – 27 months follow-up. The range of motion however, did not improve[39]. The flexor digitorum longus tendon was used for MTPJ degeneration and associated hammertoe deformity by Lee and Wong. It allowed for relief of pain and stiffness[41].

The peroneus longus “anchovy” (the tendon is rolled up) – free tendon autograft together with a flexor digitorum longus transfer was used by Zgonis *et al*. The article though only describes their technique and although they emphasize “numerous advantages”, they do not discuss their series[42].

Özkan *et al*. interposed the extensor digitorum brevis tendon in 10 patients with Freiberg’s disease unresponsive to conservative treatment. The transferred tendon was passed through a tunnel, centred, stabilized and rolled into a ball, following the debridement of the joint. Nine patients had excellent and good results at a mean follow-up of 24.6 months. The post-operative passive range of motion did not change significantly[43].

Myerson described a combination of partial shaving of the anterior aspect of the metatarsal and interposition arthroplasty using a soft tissue flap consisting of periosteum, capsule and extensor brevis tendon. The metatarsal head is contoured with a saw to maintain a circular shape of the head leaving the plantar condyles intact[44,45].

The MTPJ capsule has also been used successfully in a case with infraction. The patient was asymptomatic two years after the surgery[46].

Lui described an arthroscopic technique for interpositional arthroplasty of the second MTPJ using the extensor digitorum brevis tendon. Its indication was advanced DJD particularly with involvement of the proximal phalanx cartilage. Some of the advantages were minimal soft tissue dissection, detailed examination and debridement of the joint. The extensor digitorum brevis tendon is locally available with no major functional disadvantages by its utilization.

Two case reports were described, both of which showed preservation of the MTPJ space at 26 and 29 months respectively[47,48].

2.2.2.6 Peri-chondral grafting and osteochondral transplantation

In the early stages of Freiberg's infraction, Smillie described a procedure to re-establish new blood supply to the epiphysis across the epiphyseal plate by destroying the plate with multiple perforations with a gouge. In addition bone grafting may be required. He claims that at stage I, before pathological changes are seen on X-ray, "perfection can be anticipated[17]."

Autogenous epiphysiodesis has also been described by Lawton. At four years, the patient had no pain with excellent extension at the MTPJ[49]. A procedure on a single patient where an osteochondral plug from the non-weight bearing site on the upper lateral femoral condyle of the ipsilateral knee was reported by Hayashi *et al*. in 2002. One year following the treatment of this stage IV lesion (Smillie's classification), the patient had no pain when running and returned to full athletic activity[50]. A further case report of Freiberg's infraction of the 2nd metatarsal in a 15 year old female who was treated with autogenous osteochondral transplantation and an external fixation device for distraction of the joint was published by De Vries *et al*. The patient was asymptomatic at 19 months post-operatively[51].

A series of four female patients with an average age of 12 years were treated with osteochondral plug transplantation for late stage Freiberg's disease. The plug was harvested from the ipsilateral knee as with Hayashi's case. Mean follow-up was 52 months. The average AOFAS score improved from 70.8 pre-operatively to 97.5 points. At an arthroscopic finding at 12 months, two patients had an International Cartilage Repair Society Cartilage Repair Assessment Score of normal and two had a score of nearly normal[52]. Due to the small patient cohorts, the evidence for use of osteochondral plug transplantations is insufficient to suggest the technique.

2.2.2.7 Allograft reconstruction

More recently a retrospective review of six cases of osteochondral distal metatarsal allograft reconstruction was reported by Ajis *et al*. in 2013[24]. This procedure was presented as a salvage procedure reserved for patients with significant bone loss or avascular necrosis in whom traditional interventions have failed or are inadequate. At an average follow-up interval of 36 months, all patients maintained viability of the allograft metatarsal head and joint space was normal. They all demonstrated osseous union of the metatarsal osteotomy site. The authors claim satisfactory midterm outcomes.

Patient selection is of paramount importance and may be considered when symptomatic degenerative disease is limited to the metatarsal side of the joint. The authors also feel that in the current financial climate, this type of costly procedure may not be a viable option for many patients thus limiting the usefulness of this technique. In South Africa, the procurement process of fresh allografts is not yet in place, even though legislation allows it. No studies have been reported from South Africa.

2.2.2.8 Replacement arthroplasty

Joint replacement arthroplasty has been used in the end stages of the disease[53]. Silicone[18,54-62], ceramic[63] and metal lesser MTPJ replacement arthroplasty have been reported with mixed success[64,65].

Most published series stem from the 1970's and 1980's[54-62]. The initial simple silicone spacers and silicone ball[66] without stems were improved by the addition of prongs to increase stability. The Swanson prosthesis, originally designed for the hand, has been used for the lesser MTPJs[54-62,67]. The Nicolle, the Calnam-Nicolle and the Niebauer-Cutter hinges prosthesis had been

adapted for lesser MTPJ arthroplasty. The reported cases are too few and short term to make recommendations for their use[54,57].

In a series by Cracchiolo, 31 2nd MPJs in 28 patients were replaced by a double-stem silicone implant and a single-stem in one. Six of these patients had Freiberg's infraction. Severe subluxation or dislocation of the 2nd MTPJ was present in 26 of 32 feet. None of the Freiberg's infraction group had significant deformity. At an average follow-up time of 37 months, a good subjective result was recorded in 63% and good with reservations in 25%. Transfer metatarsalgia was a noted complication in both the reservation and failure groups[62].

Sgarlato has advocated the use of a double-stem silicone prosthetic implant in several difficult-to-treat conditions. He found it to be successful in older (over age 50 years) patients[56].

The use of silicone is associated with numerous complications[16,20] including prosthetic loosening and failure, transfer lesions, local bone erosion, joint synovitis, infection secondary to impaired vascularity, lack of toe purchase and functional disability of the involved toe and foreign body reaction. As a result of the above problems, other materials such as titanium were introduced. Shih *et al*. described a case study using a titanium hemi-implant of the proximal phalanx. It does not alter the metatarsal parabola and it allows for other surgical procedures to be performed in the future[64].

Total ceramic arthroplasty has been used by Townshend and Greiss for painful, destructive disorders of the lesser MTPJs. All nine patients were female with a mean age of 51 years. The indications included primary and revision procedures. One case required a customized implant. Mean follow-up was 23 months with a mean AOFAS score of 75. Eight patients reported good or excellent results[63]. This was a small cohort with short follow-up.

The use of a silicone implant is not recommended for the management of Freiberg's disease[16,20] and arthroplasty with metallic or ceramic implants remains unsatisfactory[16]. Currently the joint replacements available have not been proven to be effective as these joints are subjected to severe repetitive fatigue loading over small articulating surfaces through large arcs of movement.

2.2.2.9 No results have been reported for arthrodesis of the LMTP joint.

2.3 Degenerative joint disease and dislocation of the lesser metatarsophalangeal joint

There is a significant group of patients is one with degenerative joint disease (DJD) (including Freiberg's infraction) and dislocation of the 2nd MTPJ.

The 2nd MTPJ is the most common chronically subluxed or dislocated joint in the foot. Subluxation of the 2nd MTPJ occurs commonly but is often unrecognized[35]. If the deformity is long standing, the articular cartilage may be abnormal and even if the joint is reduced, secondary degenerative arthritis may develop[62,68]. It is therefore imperative not only to reduce and stabilize the joint but also to manage the symptomatic osteoarthritis by replacement or other techniques.

Reducing and stabilizing the joint by soft tissue releases, flexor to extensor tendon transfer, and metatarsal osteotomies are well covered in all basic textbooks. The direct repair of the plantar plate in stabilizing the lesser MTPJ is a more recent concept. In a cadaver based experiment it was shown that disruption of the plantar plate of the lesser MTPJs led to significant instability[4]. Techniques to repair the torn plantar plate directly are needed[8] and this is beyond the scope of this study.

Matthews *et al*, in a three-surgeon case series reported on the effectiveness of the Cobb-Stainsby excision arthroplasty for dislocated arthritic MTPJs. This involved a proximal phalengectomy, repositioning of the plantar plate and rerouting the distal end of the extensor tendon from plantar to dorsal through a hole in the metatarsal neck of 75 patients (123 corrected toes in 84 feet). Thirty nine percent of patients rated their outcome as excellent, 42% as good and 15% as fair at a minimum follow up of 12 months.

Although the authors reported 96% satisfaction rate, previous criticism of the Cobb-Stainsby procedure related to patient dissatisfaction with a floppy toe[69].

3.0 THE CONCEPT: DEVELOPMENT OF THE LESSER METATARSOPHALANGEAL JOINT REPLACEMENT ARTHROPLASTY

3.1 Background

This new lesser metatarsophalangeal joint replacement is based on a three component implant. It is made of metal and a high density polyethylene bearing. It allows plantar and dorsiflexion with an element of medio-lateral and axial rotation. An integral part of the procedure is the soft tissue balance of the joint. The weight bearing status of the involved metatarsal will be maintained thus avoiding transfer lesions. The implant may be used as a total or hemi replacement. The fixation is intramedullary and the implant has high conformity and low constraint to withstand the stresses applied on it by walking and weight bearing, thus minimizing wear. Therefore this study was undertaken to design a new implant for the lesser MTPJ and tested in vitro.

3.2 Design of a new lesser metatarsophalangeal joint (LMTPJ) replacement Arthroplasty

Over the years in orthopaedic surgery and after a recent extensive review of the literature, it has become quite clear that there is no long term effective surgical treatment for DJD of the LMTPJ of the foot. There is no known implant capable of assuming the weight bearing function of a metatarsal.

The implant should be viewed as more of a surface replacement rather than a metatarsal head replacement in terms of osseous resection and therefore the implant must not interfere with the condyles of the metatarsal head. The implant alone is by no means the stabilizing factor. Soft tissue balancing and fibrous tissue surrounding the implant provide the majority of strength to support the joint.

The implant can be visualized as a flexible fixation device permitting a stable yet mobile bearing process. It is not a substitute for a poorly functioning or unbalanced ray in the forefoot.

3.2.1 Three component design

The prosthesis is a low-constrained, three-component system that provides axial rotation and normal flexion/extension mobility by a mobile bearing element. Motion is limited by natural soft tissue constraints. The curvature of the articulating surfaces allow more sagittal than coronal motion.

Minimal bone is removed for the insertion of the components. Large contact area is achieved between the component and the hard subchondral bone by virtue of the flat resection of the bone and flat surface of the component. The three component implant provides substantial flexibility and the relatively large bearing areas between the respective components provide the arthroplasty with substantial longevity.

3.2.2 High conformity / low constraint

The arthroplasty must have low constraint and low contact stress by virtue of its large bearing surfaces and high conformance. A high congruent design allows for hinge-type articulation and rotation but no translation. Although from a mechanical strength and wear point,

congruence is an advantage, the lack of translation will allow forces to loosen the implant fixation to the bone. With an incongruent design, point loading will cause fatigue failure of the surface.

A high congruence and low constraint model is possible with a three-part design whereby the central bearing is allowed to "float" within a highly congruent opposing surface. Surface stress, therefore is minimized by the high contact area and transitional allowance is provided. To the author's knowledge, the above considerations have not been applied to the lesser metatarsophalangeal joint replacement arthroplasty design.

3.2.3 Intramedullary fixation

The unique design of the intramedullary fixation is based on a "spring" system which is under tension as it is inserted into the medullary canal. This tension will allow the springs to expand up against the bone once fully inserted, thus providing initial stability. The spring is edged with "barbs", further increasing the surface area and enhancing the anchoring in the metaphyseal region of the shaft.

3.3 The Material

3.3.1 Titanium

Osseous integration is mandatory to ensure good fixation. A porous-coated surface covered by a porous-titanium is often employed as the material of choice for implant integrating surfaces. This is further enhanced by abrading the surface.

The addition of hydroxyl-apatite (HA) to the surface allows for early fixation of the implant through HA bonding. Chrome cobalt is often used in many arthroplasty designs for its wear characteristics and is a popular articulating surface utilized with ultra-high molecular weight polyethylene (UHMWPE). As chrome cobalt does not integrate with bone it requires surface enhancement such as titanium plasma spraying.

3.3.2 Titanium Nitride (Ti-N) coating

Although titanium and titanium alloys are preferred materials for the manufacture of implant devices due to its high resistance to corrosion, its biocompatibility and compatibility with MRI scanning, untreated titanium is not suitable for arthroplasty application due to its excessive wear. These particles stain the tissue and synovial fluid black. This design will increase the titanium surface hardness by an ion implantation treatment with nitrogen (nitriding process)[70]. The advantages are as follows:

(i) The hardness of the surface is increased

(ii) The surface finish is maintained

(iii) There are no dimension changes and the coatings can be polished to a finish of less than 0.3 microns.

(iv) It is biologically inert.

3.3.3 Cross-linked high density polyethylene (UHMWPE)

The mobile bearing made of UHMWPE was first used in patients by Charnley in 1962[71]. Gamma irradiation sterilization of UHMWPE was carried out on Charnley acetabular cups[72].

The UHMWPE has now become a material of choice for arthroplasty applications. It is highly non-linear with significant elongation prior to failure. This compensates for its relatively low mechanical properties which lead to wear. Particulate debris of UHMWPE results in osteolysis, leading to tissue inflammation bone loss and eventual failure[73,74].

Cross-linking increases the strength and reduces abrasive and adhesive wear of UHMWPE[75]. In South Africa, this is achieved through gamma-radiation. The process entails gamma irradiation of the UHMWPE machined component in the presence of the gaseous cross- linking agent. It produces a higher degree of cross-linking on the surface of the implant device than the inner part thus retaining its desirable internal visco-elastic properties[76]. This cross-linking increases the strength in the interfacial region between resin particles of the polyethylene components[77]. The advantages of the South African gamma-radiation cross- linking process are as follows:

(a) Excellent wear characteristics

(b) Elimination of wear-induced osteolysis

(c) Cross-linking limits surface oxidation

(d) Post manufacture procedure

(e) Packaging of cross-linked prosthesis is done inert gas[78-80].

The combination of Ti-N versus UHMWPE is used for the new lesser MTPJ replacement arthroplasty. This was decided following in vitro wear studies by De Villiers[81] who showed minimal reduction in UHMWPE surface thickness which was comparable to that recorded by Pappas *et al*[82] in their simulated hip arthroplasty wear tests. Neither ceramic-on-ceramic nor

metal-on-metal replacement arthroplasties have been described for the lesser MTPJ. Alumina ceramic is used in total hip replacement due to its excellent wear resistance as a result of the high hardness of the material with practically no ability to yield. Caution though is directed to the brittleness of the ceramic components and a possible brittle fracture with overloading[75].

The issue of metal sensitivity remains controversial. Ongoing concern about long term effects of metal particles and ions from all metal bearings need to be further addressed[75]. In both a metal-on-metal bearing and a chromium cobalt and polyethylene cup hip study, the serum level of cobalt was significantly higher than that of a normal population[75]. All the above studies are confined to hip arthroplasty.

Although small curvature mismatches due to the manufacturing process may cause initial wear response but no appreciable long-term consequences, scratches on the surface of the metal component can increase wear several fold[83]. In the same vein, third party wear is detrimental to cross-linked UHMWPE which is vulnerable to counter face scratches. Third party (foreign) particles can lodge in the articulating interfaces and cause accelerated wear. These can be cement, bone, metal or hydroxyapatite particles[84].

3.4 Requirements of an arthroplasty pertaining primarily to the lesser metatarsophalangeal joint.

The ideal replacement arthroplasty should conform to the kinematics of the replaced joint and ensure functional pain free motion. Intrinsic stability is provided by the articulating components as well as extrinsic stability provided by the soft tissue envelope and ligamentous balance. The material used must have no long term adverse effects of a foreign body and should last the lifetime of the recipient. Other considerations are:

(i) High conformance of the articulating surfaces, low constraint, shock absorbing capabilities, frictional resistance with movement and load bearing.

(ii) Wear and wear debris generated by the articulating components can cause osteolysis and foreign body granulomas leading to failure.

(iii) Implant material must be biocompatible and suitable for imaging.

(iv) Osseous integration properties and fixation to bone.

(v) The implant must allow for minimal bone resection and optimal restoration of ligamentous balance and provide a stable joint.

(vi) It must provide for some degree of placement error.

(vii) Enough sizes must be available so as not to compromise bony resection, tension and ultimate stability and movement.

(viii) Allow for revision[81].

Factors that can influence the longevity of the arthroplasty can be divided into:

(i) Implant design (as discussed previously)

(ii) Patient factors

(iii) Surgical factors:

  (a) Surgical technique

  (b) Restoration of anatomy

3.5 METHODS

3.5.1 The prosthesis design.

There are a series of problems that had to be addressed in the design of the prosthesis, bearing in mind the anatomy, movement and general biomechanics of the lesser MTPJ.

3.5.2 The fixation

The lesser metatarsal and even more so the proximal phalanx are small bones, much smaller than any other joint where total replacement arthroplasty has been successful in orthopaedic surgery. The fixation therefore, into the bone as well as the articulation-bone interface could have posed a problem with relation to the contact area.

a) The researcher felt that the best fixation in such a small cylindrical bone is intramedullary. From previous experience using "screw" fixation in hammertoe implants, it was found that a "screw" system is unpredictable as templating on a preoperative X-ray is not accurate. Is the cortex (in osteopenic bone) thick enough for the screw thread to "bite"? What would be an appropriate length as the implant in mind is more "resurfacing" so as to keep the plantar condyles for weight-bearing and therefore there is a large disparity between the width of the metaphysis and diaphysis. The amount of cancellous bone in the metaphyseal region is not standard and once again the screw thread may not engage rendering the implant unstable. The researcher therefore conceptualized a "spring" system that is inserted into the canal under tension. Two to four "prongs" depending on the bone (four for the metatarsal and two for the proximal phalanx) would suffice.

To further increase the contact area and the "grip" into the cancellous and cortical bone, "barbs" were added to the prongs.

The author had to look at the risk of pressure necrosis of the "springs" against the bone. The risk may be decreased by the springs emerging in the metaphyseal area of the bone and not directly on cortical bone which is unyielding.

b) Articular portion to bone contact:

In order to gain as much contact as possible, very little bone is resected off the metatarsal head and corresponding proximal phalangeal base, in a "flat cut".

3.5.3 The curvature of the articular surface:

The curvature had to allow for more sagittal than coronal movement, i.e. the radius of curvature was less from dorsal to plantar. It did not have to be exactly the same curvature of the original joint, as long as there was conformity between the implants and the range equals that of the normal.

The dorso-plantar curve, therefore, would be more convex than the medio-lateral curve. The polyethylene insert (meniscus) would conform to the metatarsal component's curvature, i.e. the metatarsal surface of the meniscus will be concave to fit the curvature of the metatarsal head.

3.5.4 Material

a) The researcher initially thought of using memory metal (NiTi-based) as it may have made the insertion of the implant easier.

"Memory" metal has a certain shape when frozen and reverts to its original shape once thawed (body heat).

The “spring” is “closed” under frozen conditions and expands once in the bone. The problems that became evident were as follows:

- the yield strength is lower than that of conventional steel
- bone incorporation is not as good
- risk of nickel allergy
- storage
- high cost of the metal and the processing requirements

The researcher further discussed the materials and decided against hydroxyl-apatite (HA) titanium coating for better bone incorporation, as HA has been implicated to cause significant peri-prosthetic cysts in total ankle replacement as well as being a contributor to third party wear[85]. Although bone incorporation is good, potential cyst formation outweighs the benefits.

It was therefore decided that micro abrading the titanium will be a better option. The titanium nitride coating was suggested by the bio-engineers for its hardened surface, giving wear resistance to the articulating surface, rather than chromium cobalt which was originally considered. A chrome cobalt stem would furthermore have entailed a titanium plasma spraying process to enhance integration.

b) The cross-linked UHMWPE bearing is the current “gold standard”. As the load application is low, there was no need for crosslinking. A minimum thickness had to be determined, bearing in mind the stress against the joint that can cause failure of the plastic. An anti-oxidant protected UHMWPE was used, as the polyethylene will over time be prone to free-radical degradation from the gamma sterilization process.

The researcher discussed the design with the bioengineers of Southern Medical as originally envisaged, as to the feasibility of manufacturing it. The design was mostly acceptable to them. The advice on the concept of attaching the polyethylene insert to the phalangeal component allowing some "play" that will reduce the stress across the joint maintaining the low constraint concept (not unlike the "bipolar" hip system) was adopted. This idea had been designed by Southern Medical for a first MTPJ replacement, but had never been developed.

Accurate measurement of the II, III and IV metatarsal heads (height and width) was required to obtain an average size for the manufacture of the metatarsal component, was to be obtained from dry bones. Similar measurements of the base of the proximal phalanges corresponding to the II – IV metatarsal heads, were done.

4.0 MATERIALS and METHOD

The first step in the design was to determine the size of the implants. Skeletons from the University of the Witwatersrand Anatomy Department were used for this purpose. These measurements were given to the bioengineer of the Southern Medical Group who proceeded to manufacture the prototype as previously discussed.

4.1 Collection of data

A sample size of approximately 40 feet from different skeletons was used for measurement. A sample size of 30 feet was confirmed by the statistician as being adequate for the above purpose. This is according to the "central limit theorem"[86] which states that as the sample size increases the distribution of the sample becomes more and more normally distributed.

The skeletons were provided by the Anatomy Department of the University of the Witwatersrand. For the purpose of the initial skeleton measurements, a digital calliper was used and rounded off to the nearest millimetre. The measurements were done and recorded by myself. The average height and width of the II and III metatarsal heads was the same (15 mm and 10 mm respectively). The difference in the average height and width of the second and third proximal phalanx base was very small at 1 mm respectively.

The average height and width of the II and III metatarsals with their corresponding proximal phalanx are plotted in the following tables.

These findings are significant as a more limited range in the size of the implants could be

used for both the second and third LMTPJs (see **Figures 8 a – d**).

Metatarsal Head II

(Height mm) (N:40)	(Width mm) (N:40)
13	8
13	8
14	8
15	9
14	9
16	9
14	9
14	9
13	9
13	9
15	9
15	9
16	10
15	10
15	10
6	10
14	10
15	10
14	10
14	10
16	10
15	10
16	10
15	10
15	10
15	10
15	10
14	10
14	10
18	11
16	11
13	11
18	11
16	11
15	11
13	11
18	12
18	12
14	12
19	14

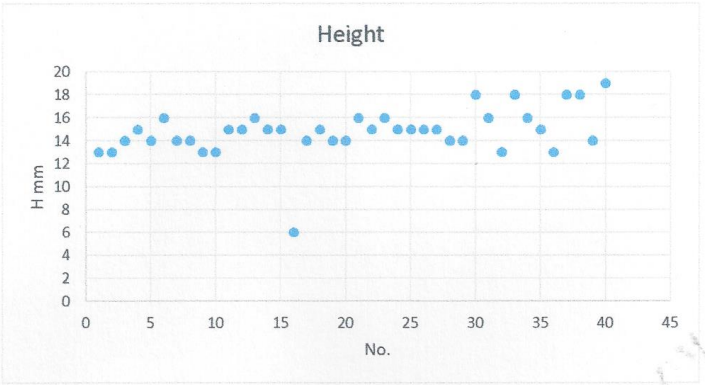

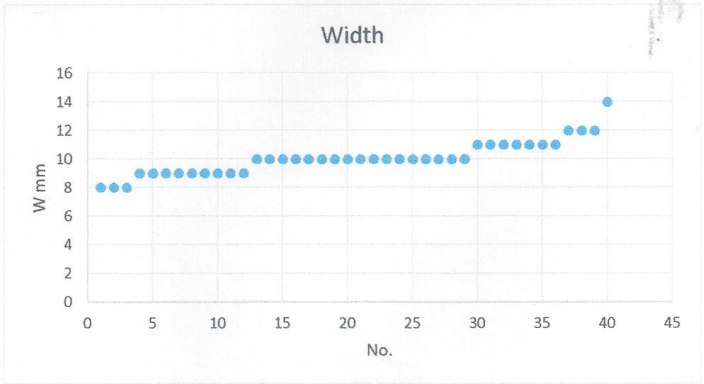

Metatarsal II

Height (mm)	Width (mm)
15 (Range: 13-18)	10 (Range: 8-14)

Figure 8a Metatarsal II head measurements (skeleton)

Metatarsal Head III

(Height mm) (N:40)	(Width mm) (N:40)
17	10
17	9
15	9
12	8
15	9
17	11
16	11
18	10
11	8
14	8
15	9
14	10
15	9
13	10
13	8
11	8
15	10
14	8
13	9
16	9
14	9
15	9
12	7
16	9
15	9
14	8
15	9
15	9
13	9
12	7
14	9
13	10
14	9
14	8
13	9
14	10
13	9
14	9
12	8
16	9

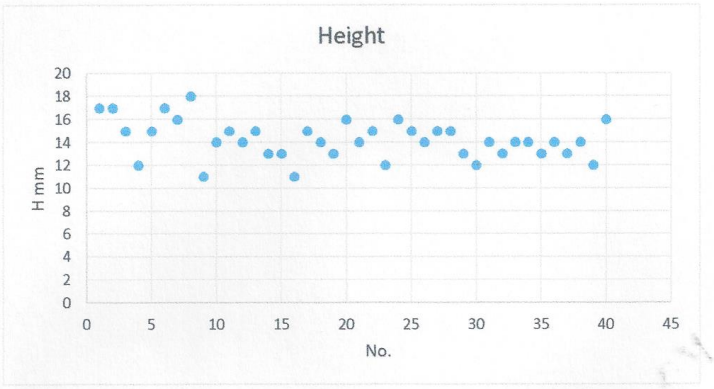

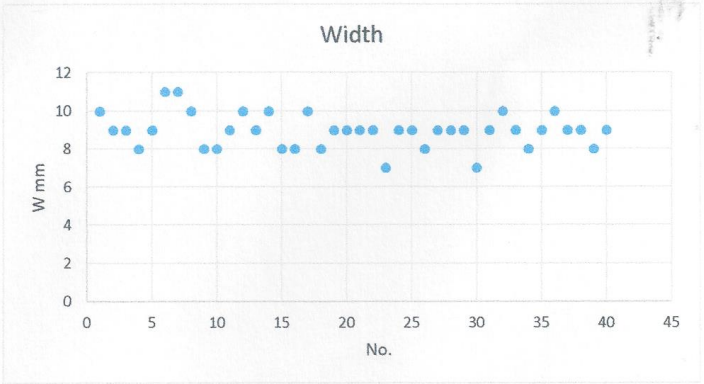

Metatarsal III

Height (mm)	Width (mm)
15 (Range: 12-18)	10 (Range: 7-11)

Figure 8b Metatarsal III head measurements (skeleton)

(Height mm) (N:25)	(Width mm) (N:25)
12	13
11	10
12	12
10	11
12	14
11	14
11	12
10	11
12	14
10	13
11	11
12	14
13	13
10	11
11	11
10	13
9	13
11	13
9	13
10	12
11	13
11	12
10	12
9	11
12	11

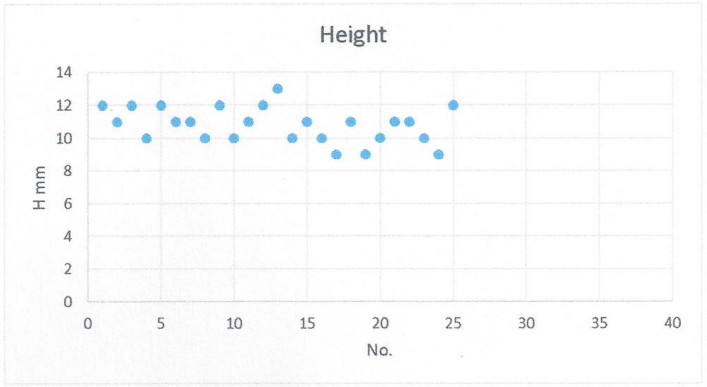

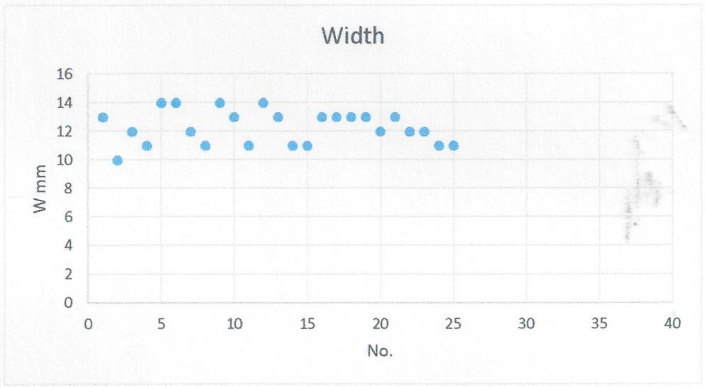

II Proximal Phalanx

Height (mm)	Width (mm)
11 (Range: 9-13)	12 (Range: 10-14)

Figure 8c Second toe proximal phalanx measurements (skeleton)

(Height mm) (N:26)	(Width mm) (N:26)
10	12
11	9
11	12
9	11
10	12
11	12
10	11
9	11
9	10
11	11
9	11
10	10
10	12
10	11
10	10
10	10
10	11
11	12
10	11
8	11
10	11
10	12
10	11
9	10
9	10
11	12

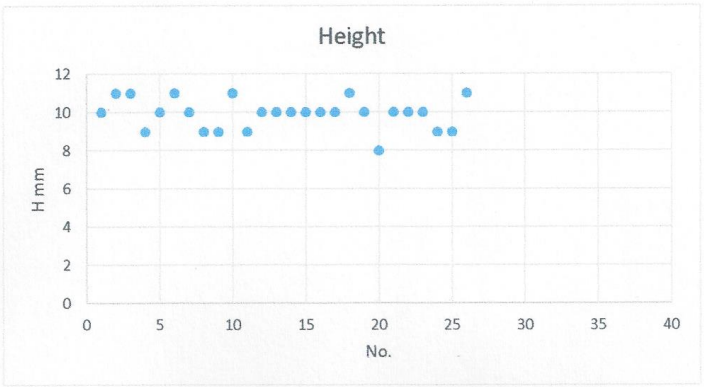

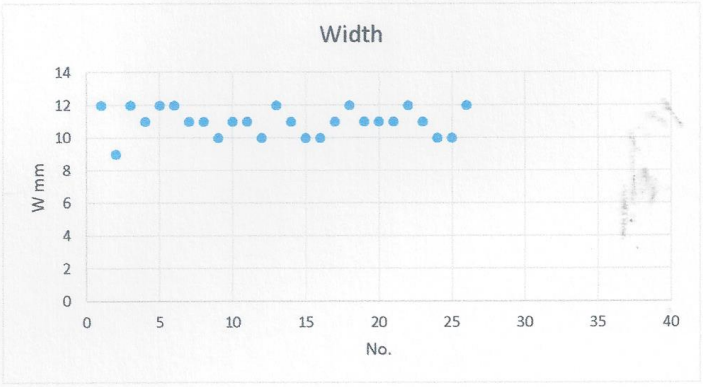

III Proximal Phalanx

Height (mm)	Width (mm)
10 (Range: 8-11)	11 (Range: 9-12)

Figure 8d Third toe proximal phalanx measurements (skeleton)

Based on the measurements of the lesser metatarsals and corresponding phalanges obtained from the anatomy department, the IT department used a software programme (Solid Works), which is a generic computer aided design (CAD). It is very commonly used by engineers for various applications.

4.2 Cadavers

Fresh frozen cadavers at the University of Cape Town and Walter Sisulu Hospital, KZN, laboratories were used for the trial placement of the implants. These cadavers were not exclusively for the researcher's use, but as the researcher is involved in cadaver workshops for various other studies and instructional courses pertaining to foot and ankle surgery, the same feet were utilized for the purpose of this study. The subsequent fresh cadaver trials, using the custom-made equipment, were performed by the researcher and assisted by a colleague foot and ankle orthopaedic surgeon (Dr P N F Ferrao).

4.3 Surgical technique

The stability of the joint relies primarily on the surrounding soft tissue envelope. The challenge here was to create a stable articulation. This was tested in fresh cadavers by limited dissection to maintain as much of the supportive structures in place.

The problem, though, was accessibility to insert the implants as resecting as little bone as possible was desirable. The researcher had to rely on different thickness polyethylene inserts to maintain the tissue under correct tension. A completely mobile bearing may be easily dislocatable in view of the size of the joint and its multi directional mobility. It would be better

then, to have the polyethylene bearing attached to the phalangeal component once the soft tissue tension is achieved and the gap measured. No specialized instruments for the insertion of the components would be necessary at this stage. A foot and ankle set will suffice. As the preclinical trials progressed the researcher assessed the need for any specific instruments (i.e. a clamp to hold or liberate the "spring" at the right depth).

As there are no guidelines for cadaveric trials, the researcher devised his own criteria for range of motion measurement and stability based on related cadaver studies[12,13].

Any difficulty encountered, was analysed and the implant refined for further trials.

4.4 Range of motion measurement and stability

Articulation measurements by means of a custom-made electrogoniometer and simulation software open-source Arduino software (IDE) were recorded. Custom made instrumentation was used for measuring stability of the lesser MTPJ applying superior and dorsiflexion directed forces at 30, 35 and 40 N, respectively.

This was based on the cadaveric studies where it appeared that on average the subluxation stability of the intact joints is around 25 N/mm in a dorsal or superior direction and approximately 16 N/mm dorsiflexion which are the more relevant directions for our purposes[12,13]. Comparisons were made between the intact joints and after insertion of the implant with respect to mobility, stability and alignment.

4.5 Dynamic wear and fatigue testing

Dynamic wear and fatigue testing was performed in the laboratory of the CSIR, by means of custom-made articulating instruments measuring cyclical and compression loading to determine longevity and wear debris.

5.0 THE EARLY DESIGN AND THE IMPLANTATION OF A PROTOTYPE LESSER METATARSOPHALANGEAL JOINT REPLACEMENT ARTHROPLASTY IN FRESH CADAVERS.

This chapter deals with the author's initial thoughts on the new device. The subsequent figures are a progression from original hand drawings to computer generated ("artist's impression") drawings, technical diagrams and finally photographs of the completed product including implantation into the fresh frozen cadaver feet.

5.1 Hand drawings (see Figures 9a-b).

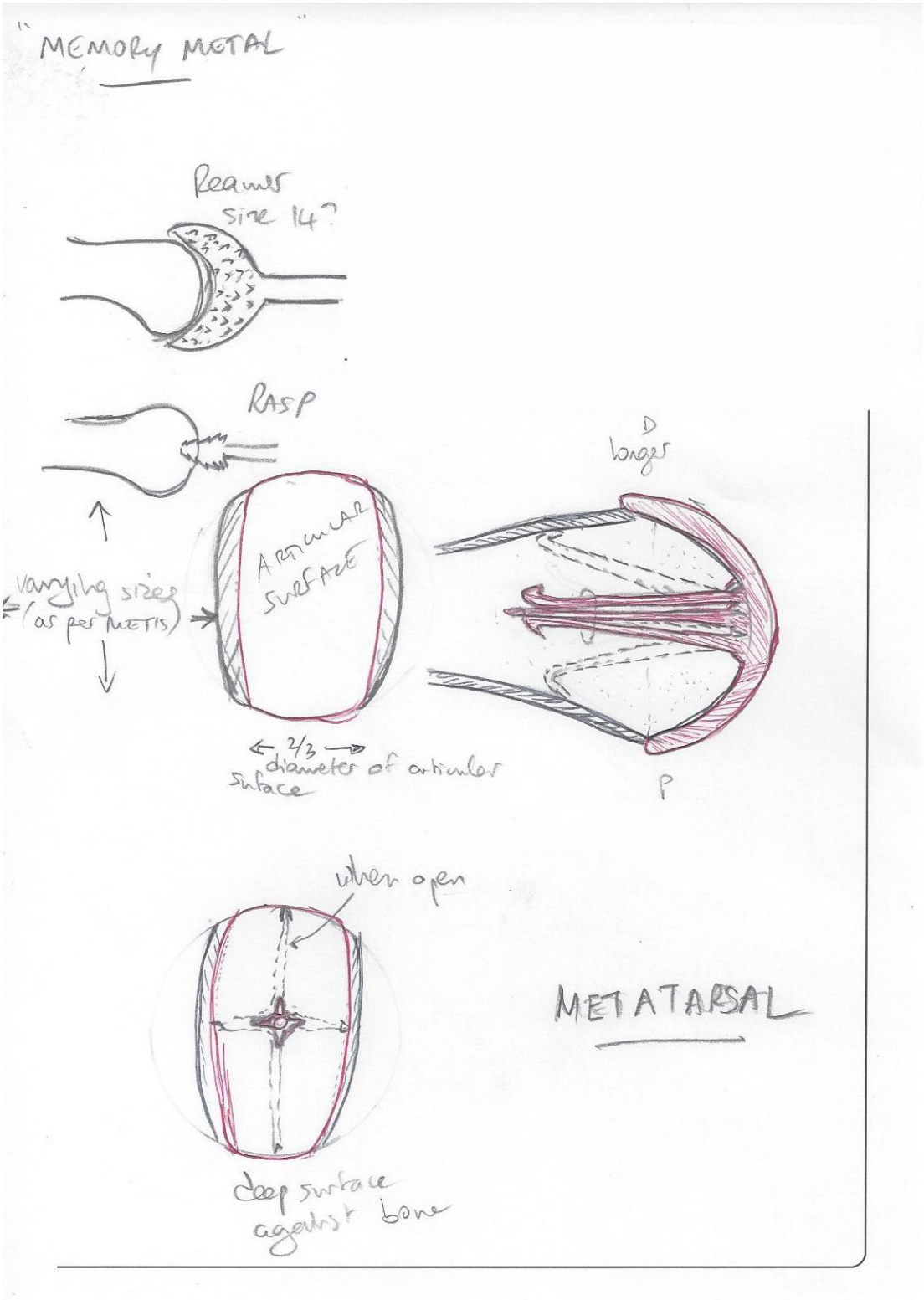

Figure 9a Initial drawings of the lesser metatarsophalangeal joint replacement arthroplasty (metatarsal component)

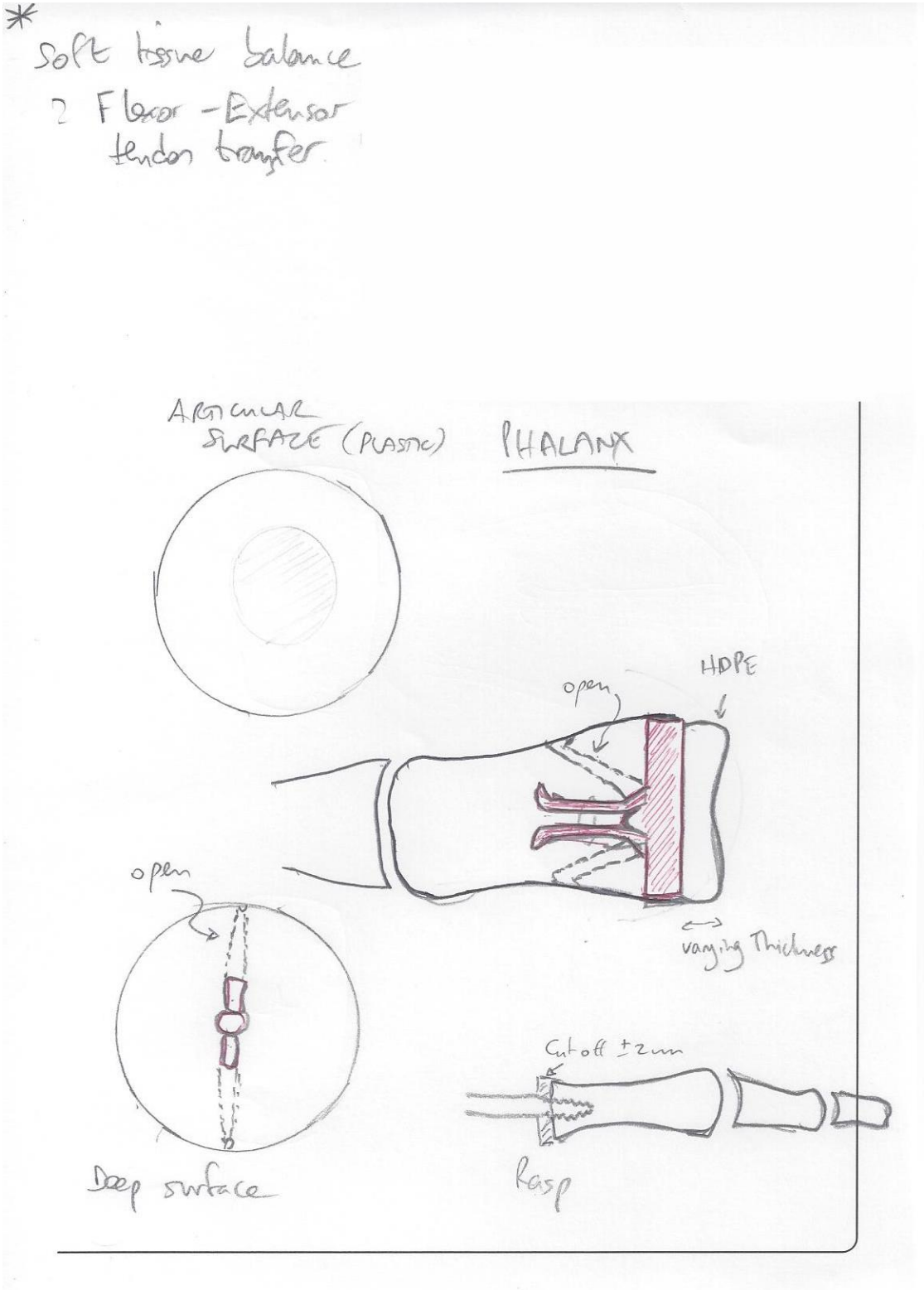

Figure 9b Initial drawings of the lesser metatarsophalangeal joint replacement arthroplasty (phalangeal component)

5.2 Computer generated diagrams of the implant concept (see Figure 10).

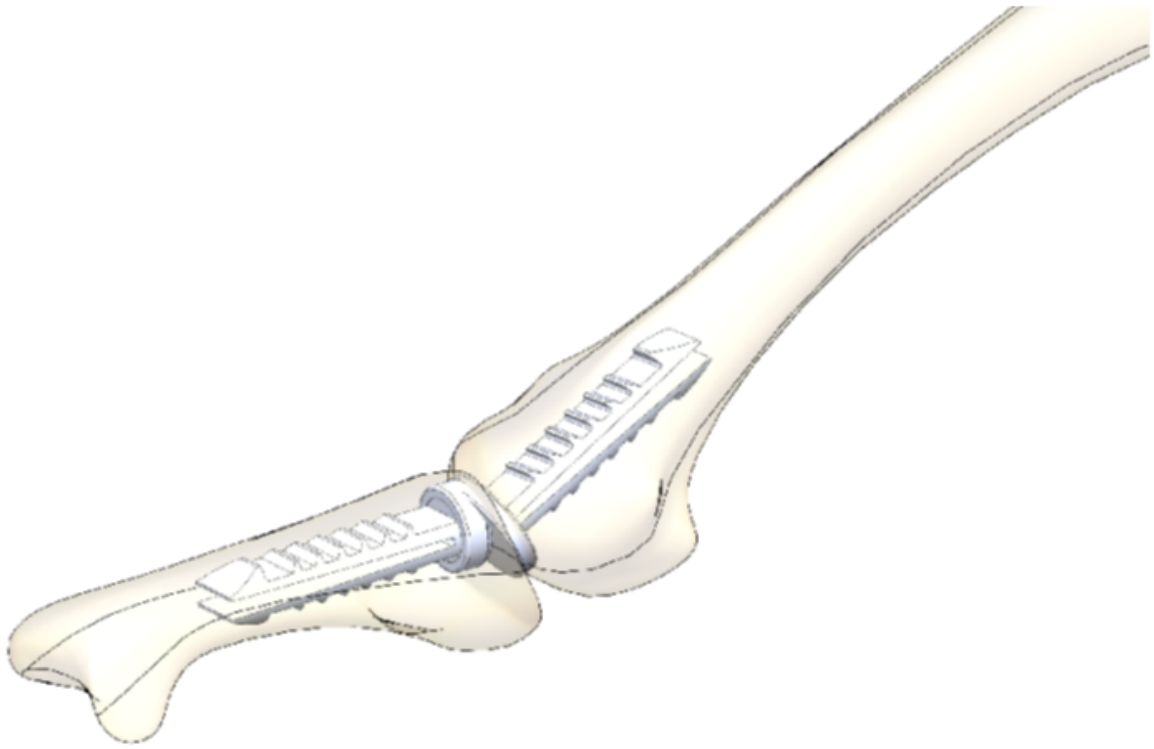

Figure 10 Computer generated diagram of the implant concept

5.3 Computer generated drawings of the early design (see Figures 11a – e).

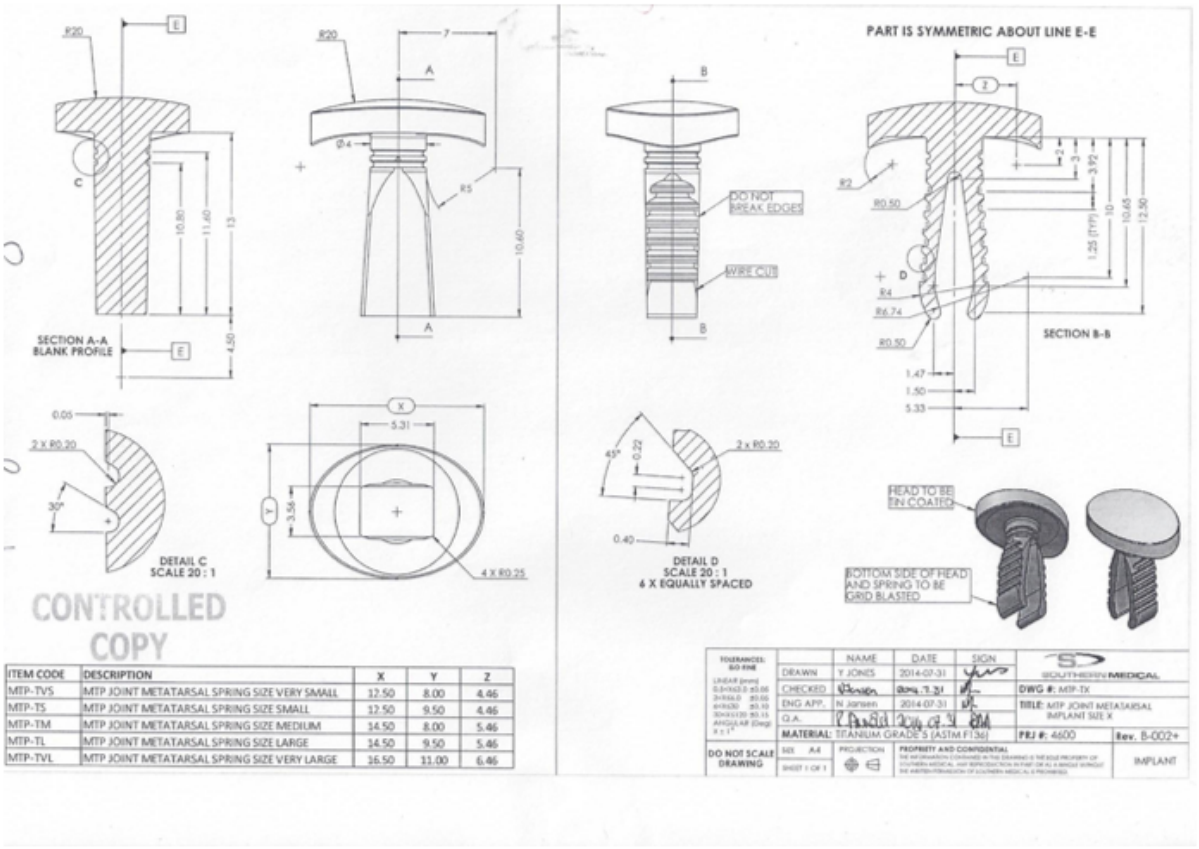

ITEM CODE	DESCRIPTION	X	Y	Z
MTP-TVS	MTP JOINT METATARSAL SPRING SIZE VERY SMALL	12.50	8.00	4.46
MTP-TS	MTP JOINT METATARSAL SPRING SIZE SMALL	12.50	9.50	4.46
MTP-TM	MTP JOINT METATARSAL SPRING SIZE MEDIUM	14.50	8.00	5.46
MTP-TL	MTP JOINT METATARSAL SPRING SIZE LARGE	14.50	9.50	5.46
MTP-TVL	MTP JOINT METATARSAL SPRING SIZE VERY LARGE	16.50	11.00	6.46

Figure 11a Computer generated drawings of the early design technical (metatarsal component)

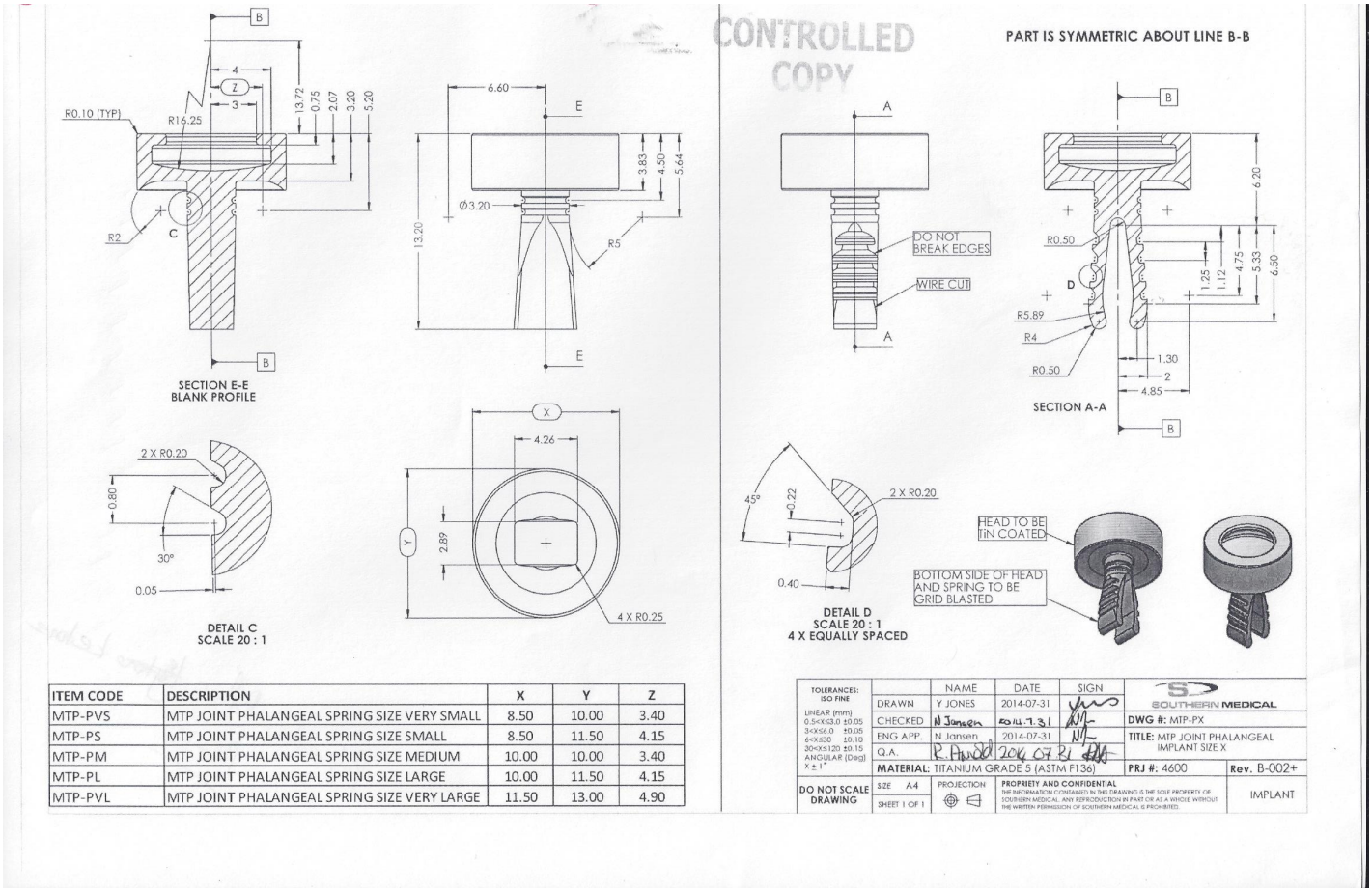

ITEM CODE	DESCRIPTION	X	Y	Z
MTP-PVS	MTP JOINT PHALANGEAL SPRING SIZE VERY SMALL	8.50	10.00	3.40
MTP-PS	MTP JOINT PHALANGEAL SPRING SIZE SMALL	8.50	11.50	4.15
MTP-PM	MTP JOINT PHALANGEAL SPRING SIZE MEDIUM	10.00	10.00	3.40
MTP-PL	MTP JOINT PHALANGEAL SPRING SIZE LARGE	10.00	11.50	4.15
MTP-PVL	MTP JOINT PHALANGEAL SPRING SIZE VERY LARGE	11.50	13.00	4.90

Figure 11b Computer generated drawings of the early design technical (phalangeal component)

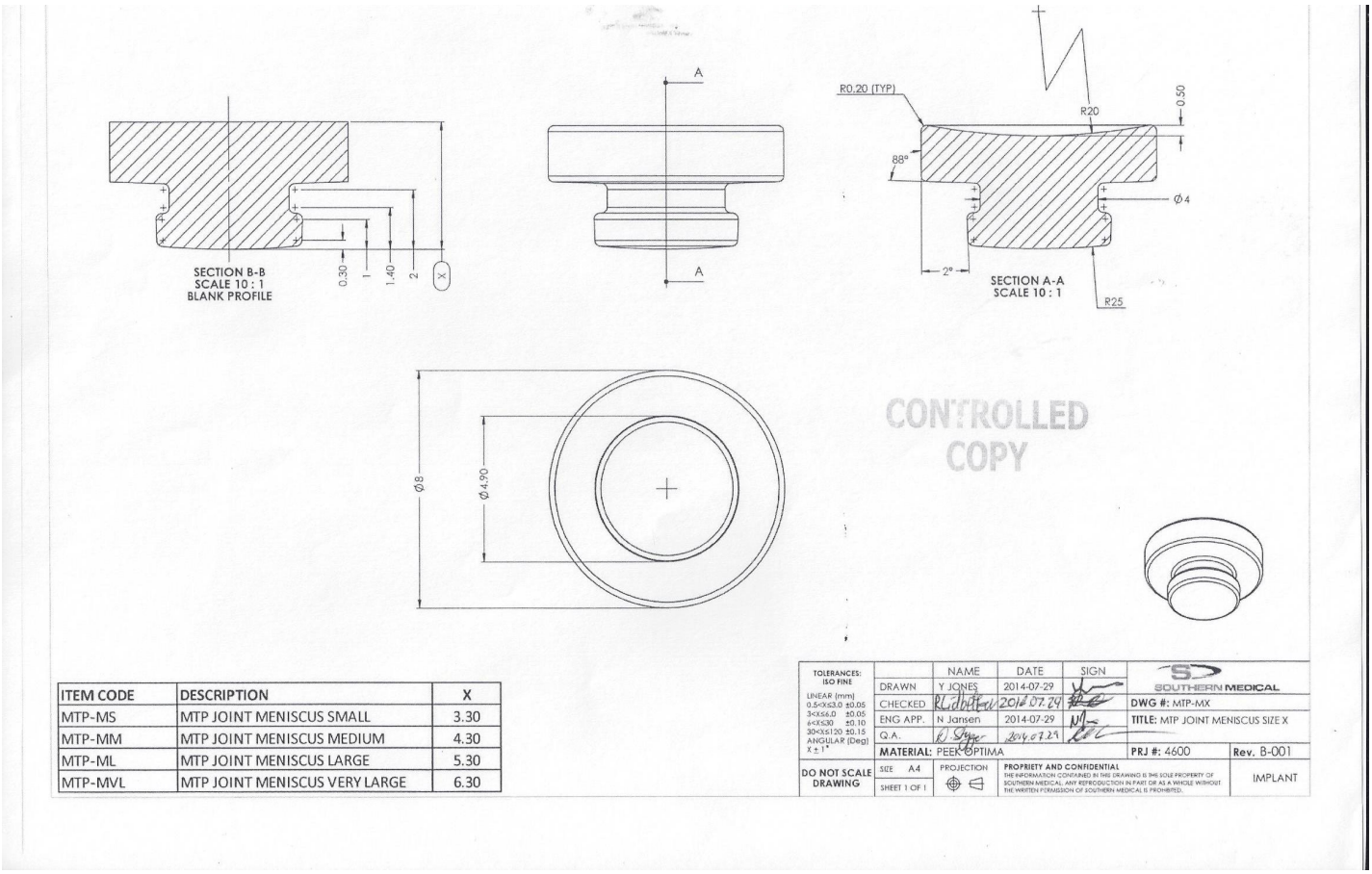

ITEM CODE	DESCRIPTION	X
MTP-MS	MTP JOINT MENISCUS SMALL	3.30
MTP-MM	MTP JOINT MENISCUS MEDIUM	4.30
MTP-ML	MTP JOINT MENISCUS LARGE	5.30
MTP-MVL	MTP JOINT MENISCUS VERY LARGE	6.30

TOLERANCES: ISO FINE		NAME	DATE	SIGN	SOUTHERN MEDICAL
LINEAR (mm) 0.5<X≤3.0 ±0.05; 3<X≤6.0 ±0.05; 6<X≤30 ±0.10; 30<X≤120 ±0.15	DRAWN	Y JONES	2014-07-29		
	CHECKED	R Lindsay	2014.07.29		DWG #: MTP-MX
ANGULAR (Deg) X ± 1°	ENG APP.	N Jansen	2014-07-29		TITLE: MTP JOINT MENISCUS SIZE X
	Q.A.	D Steyn	2014.07.29		
	MATERIAL: PEEK-OPTIMA				PRJ #: 4600 Rev. B-001
DO NOT SCALE DRAWING	SIZE A4	PROJECTION	PROPRIETY AND CONFIDENTIAL THE INFORMATION CONTAINED IN THIS DRAWING IS THE SOLE PROPERTY OF SOUTHERN MEDICAL. ANY REPRODUCTION IN PART OR AS A WHOLE WITHOUT THE WRITTEN PERMISSION OF SOUTHERN MEDICAL IS PROHIBITED.		IMPLANT
	SHEET 1 OF 1				

Figure 11c Computer generated drawings of the early design technical (meniscus)

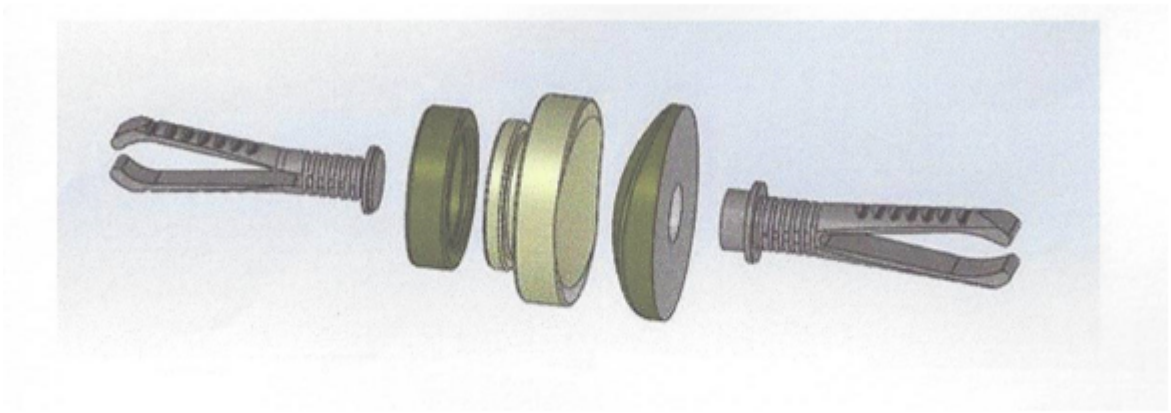

Figure 11d Computer generated drawings of the early design

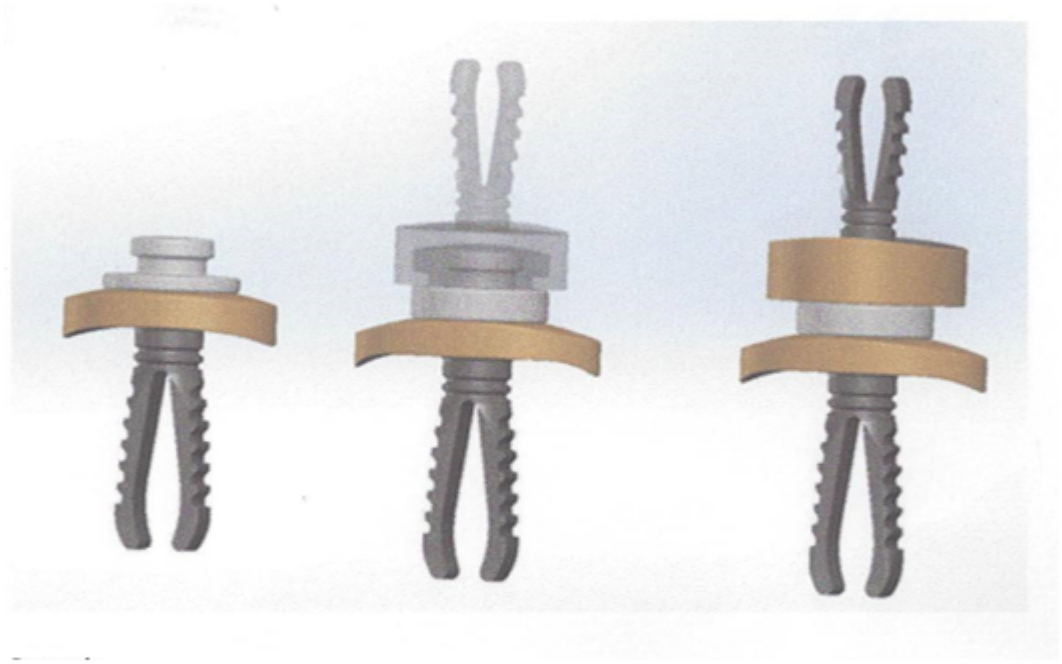

Figure 11e Computer generated drawings of the early design

5.4 Photographs of actual implant and in situ cadaver (see Figure 12).



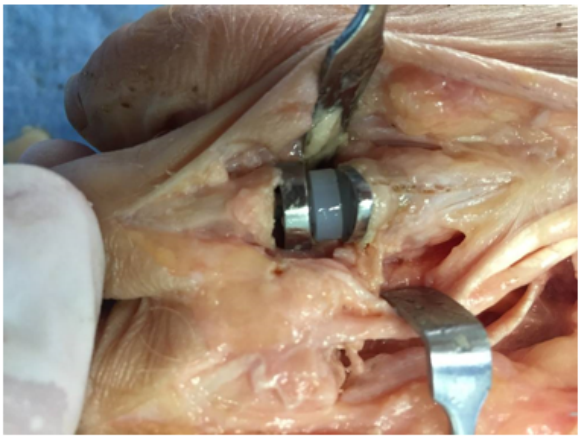

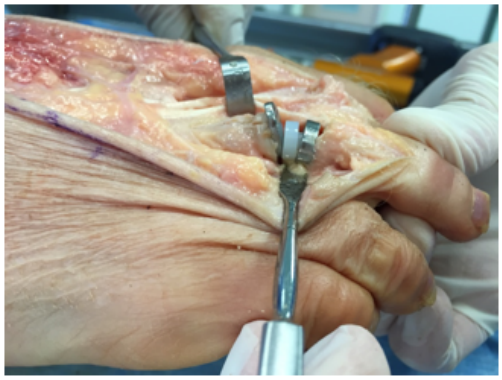

Figure 12 Photographs of the implant and in situ cadaver

6.0 INITIAL CADAVER STUDIES – PROBLEMS ENCOUNTERED

This chapter covers the problems that I had encountered with the prototype device. I discussed potential changes with the bioengineers who promptly revised the implant.

6.1 Prongs on the metatarsal implant were too central thus causing a dorsal protrusion. Must be at the junction of the dorsal (1/3) and plantar (2/3) (see **Figure 13**).



Figure 13 Superior edge of metatarsal component projecting beyond the bone

6.2 Prongs on the phalangeal component did not have the desired fixation and a screw system will be tried out (see **Figure 14**).

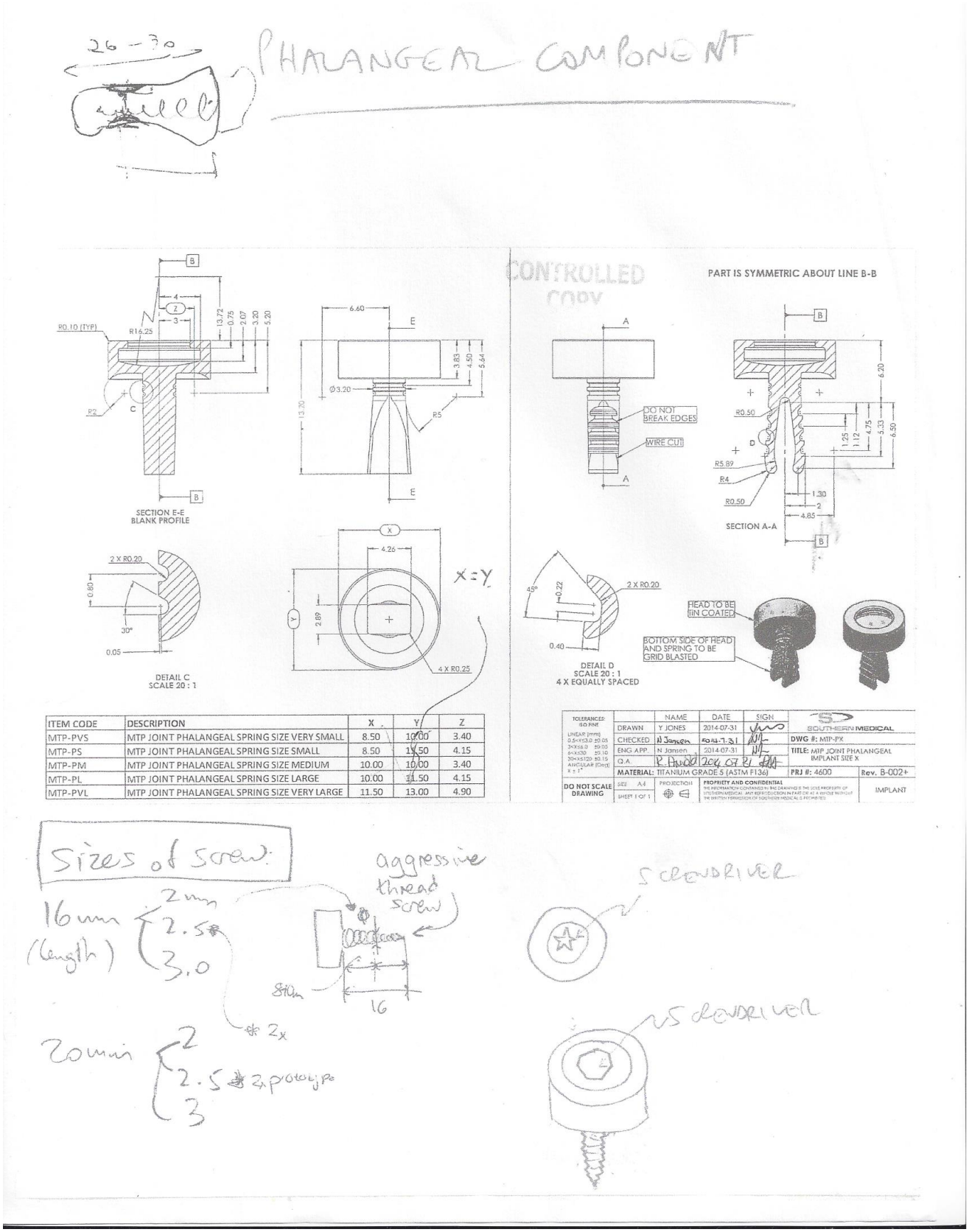

ITEM CODE	DESCRIPTION	X	Y	Z
MTP-PVS	MTP JOINT PHALANGEAL SPRING SIZE VERY SMALL	8.50	10.00	3.40
MTP-PS	MTP JOINT PHALANGEAL SPRING SIZE SMALL	8.50	11.50	4.15
MTP-PM	MTP JOINT PHALANGEAL SPRING SIZE MEDIUM	10.00	10.00	3.40
MTP-PL	MTP JOINT PHALANGEAL SPRING SIZE LARGE	10.00	11.50	4.15
MTP-PVL	MTP JOINT PHALANGEAL SPRING SIZE VERY LARGE	11.50	13.00	4.90

	NAME	DATE	SIGN	
DRAWN	Y JONES	2014-07-31		SOUTHERN MEDICAL
CHECKED	N Jansen	2014-7-31		DWG #: MTP-PX
ENG APP.	N Jansen	2014-07-31		TITLE: MTP JOINT PHALANGEAL IMPLANT SIZE X
Q.A.	R. Hudd	2014 07 31		
MATERIAL: TITANIUM GRADE 5 (ASTM F136)				PRJ #: 4600 Rev. B-002+
DO NOT SCALE DRAWING	SIZE A4	PROJECTION	PROPRIETY AND CONFIDENTIAL	IMPLANT
	SHEET 1 OF 1			

Figure 14 Diagrams for improving the phalangeal component

6.3 The phalangeal component requires indentations to fit screw driver for insertion as it will now be a screw fixation.

6.4 For ease of access without damaging any of the articular surfaces, approximately 3 mm of bone was resected from the metatarsal head and base of the proximal phalanx.

6.5 The oval head of the phalangeal component was unnecessary.

6.6 Intramedullary component of implant needs to have a "radius", i.e. a more robust attachment to the articular component (see **Figure 15**).

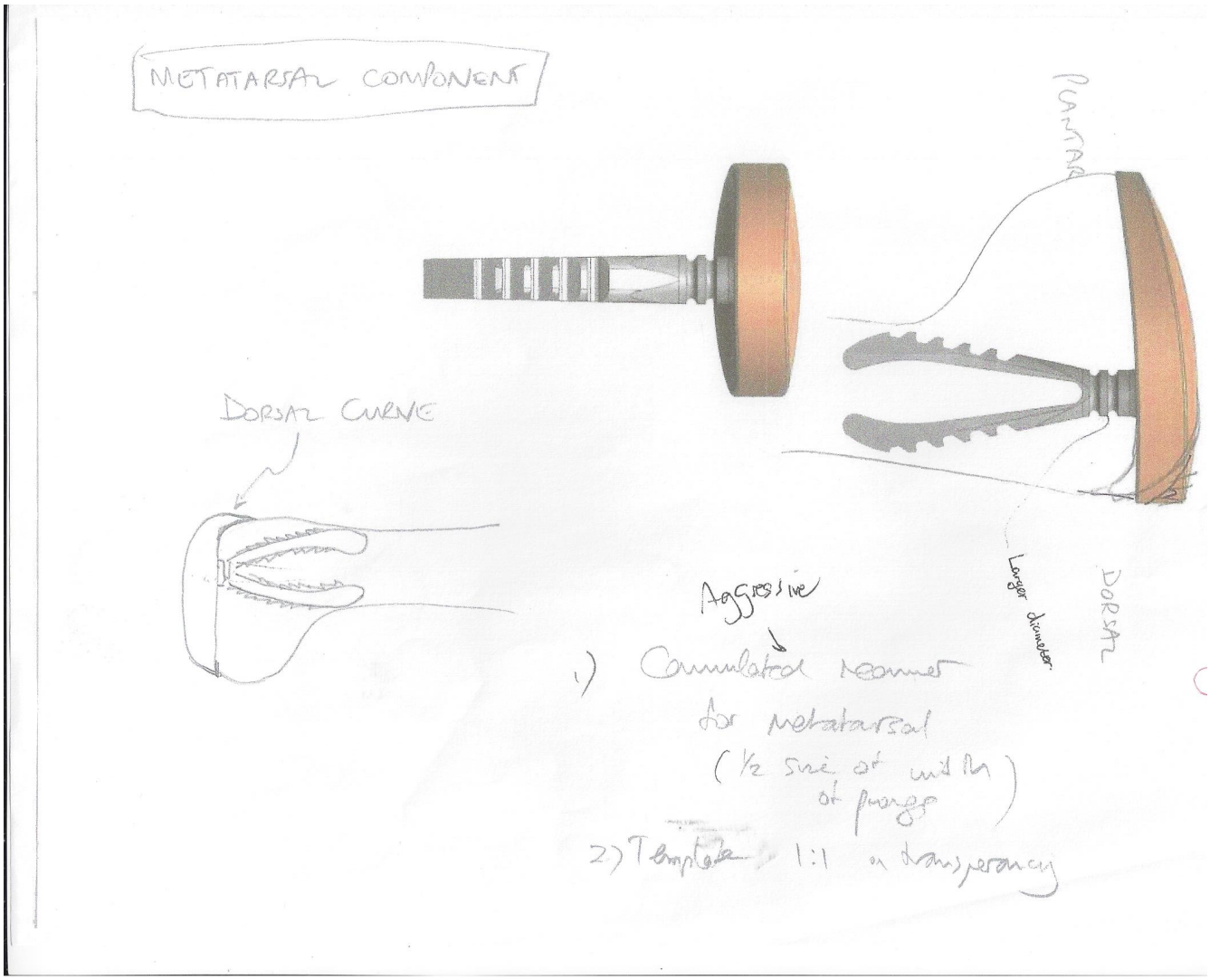

Figure 15 Improving the radius of the metatarsal component

7.0 DESIGN OF FIRST REVISED IMPLANT AND CADAVER TRIAL

The revised implant was once again subjected to cadaver trials and the following figures clearly show the changes made to both the metatarsal and phalangeal components. This also included a second revision of the phalangeal component related to the more robust thread. The new design allowed for a good fit.

7.1 Computer generated diagrams and actual new design (see **Figures 16a – d**).

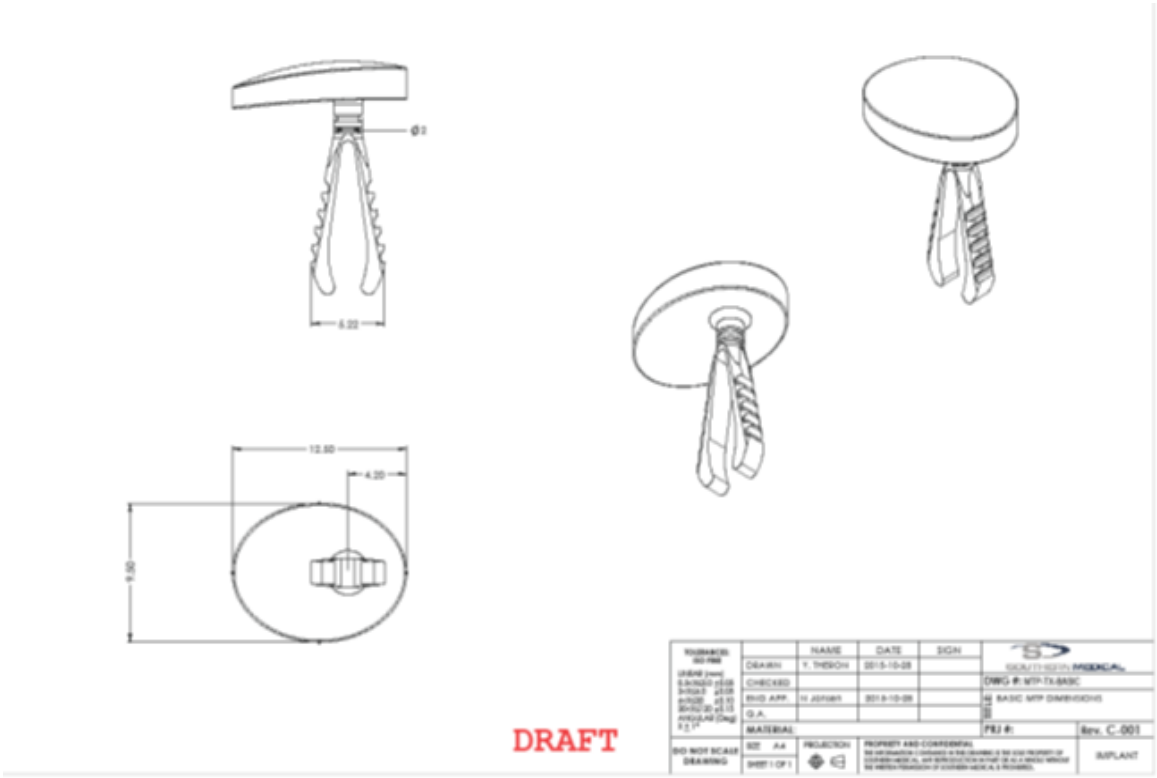

Figure 16a Computer generated drawings of the first revised implant (metatarsal component)



Figure 16b Computer generated photograph of the first revised implant (metatarsal component)

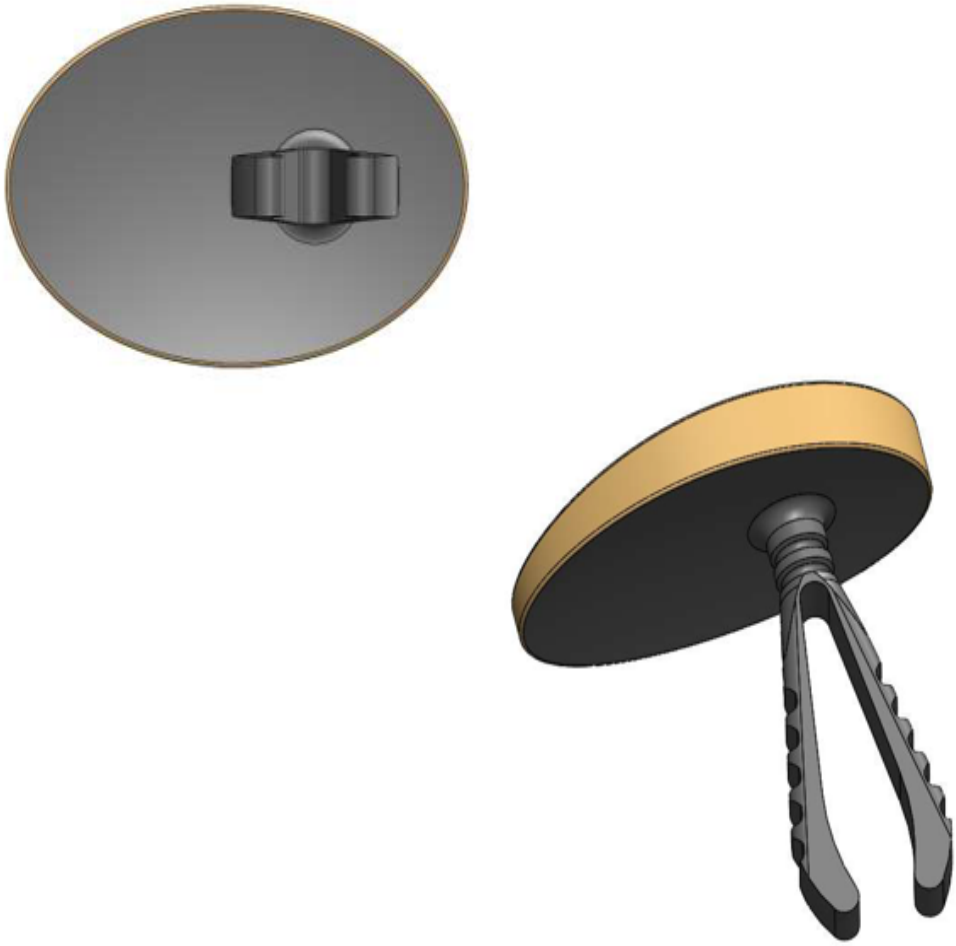

Figure 16c Computer generated photograph of the first revised implant (metatarsal component)

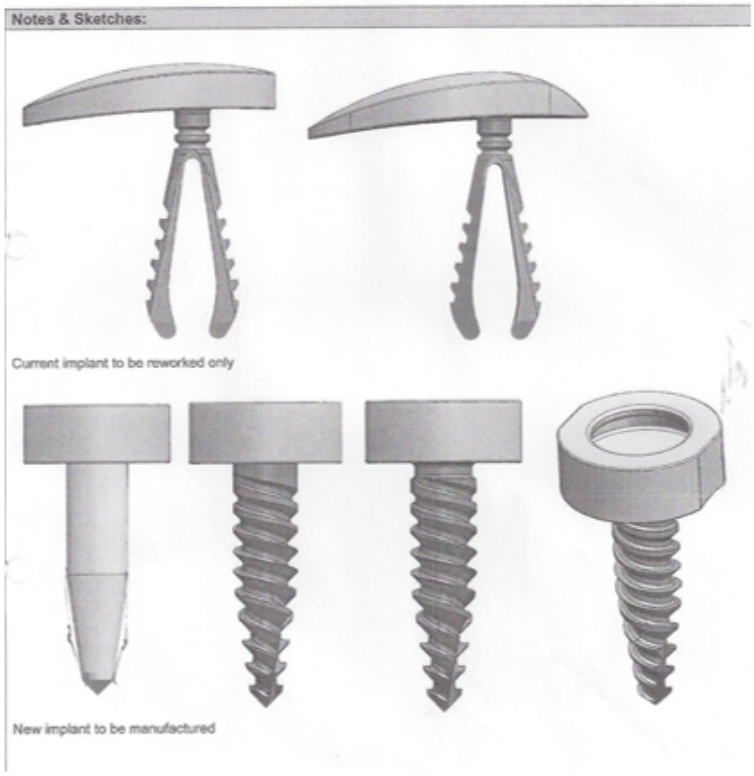

Figure 16d Computer generated photograph of the first revised implant (metatarsal and phalangeal components)

The implanted device in a cadaver (see **Figure 17**).



Figure 17 First revised implant in cadaver

7.2 Conclusion

The new design metatarsal component allowed for a good fit. The concept of a screw system for the phalangeal component provided a better fixation, although the threads require being more aggressive.

The head of the phalangeal component requires appropriate notches and corresponding screwdrivers for placement. The metatarsal reamer needs to be cannulated for accurate placement of the implant.

7.3 Second revised implant – technical (phalangeal component) (see **Figure 18**).

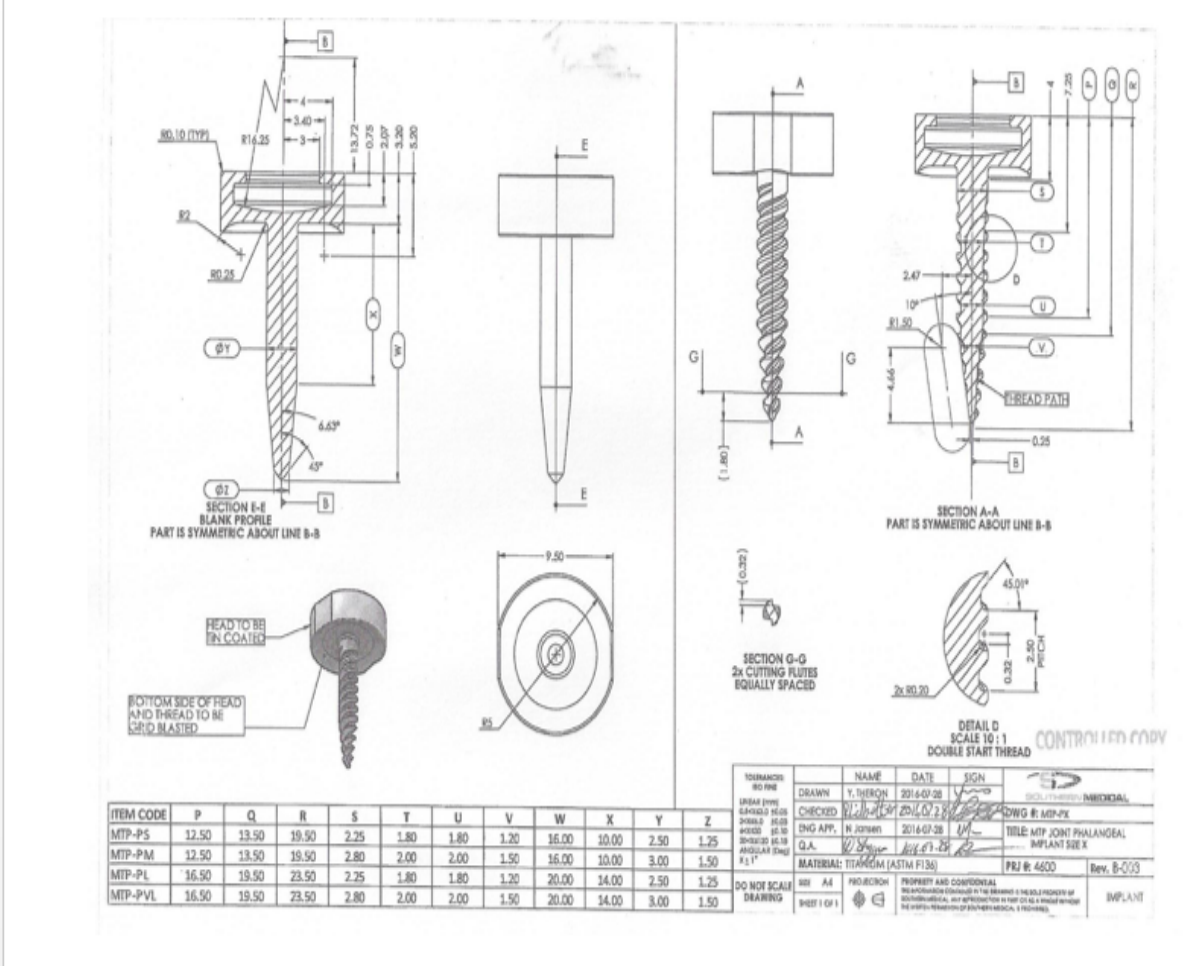

ITEM CODE	P	Q	R	S	T	U	V	W	X	Y	Z
MTP-PS	12.50	13.50	19.50	2.25	1.80	1.80	1.20	16.00	10.00	2.50	1.25
MTP-PM	12.50	13.50	19.50	2.80	2.00	2.00	1.50	16.00	10.00	3.00	1.50
MTP-PL	16.50	19.50	23.50	2.25	1.80	1.80	1.20	20.00	14.00	2.50	1.25
MTP-PVL	16.50	19.50	23.50	2.80	2.00	2.00	1.50	20.00	14.00	3.00	1.50

Figure 18 Second revised implant-technical (phalangeal component)

8.0 DESIGN OF FINAL IMPLANTS AND CADAVER TRIALS

This is now the final product with more detailed technical data, including design and material. The instruments required for the implantation of the device are also described. This is followed by the cyclical testing of the device in the laboratory with a description of the method and equipment. While the device was being subjected to cyclical loading, the researcher implanted and tested the device in four fresh frozen cadaver feet (the second toe). The surgical technique is described.

Furthermore an independent foot and ankle surgeon implanted the device in two fresh frozen cadaver feet at a different wet laboratory using the described technique. The procedure was reproducible.

8.1 Description of the implant

8.1.1 The lesser metatarsophalangeal replacement arthroplasty is a mobile bearing device that insures high conformance (see **Figure 19a**).

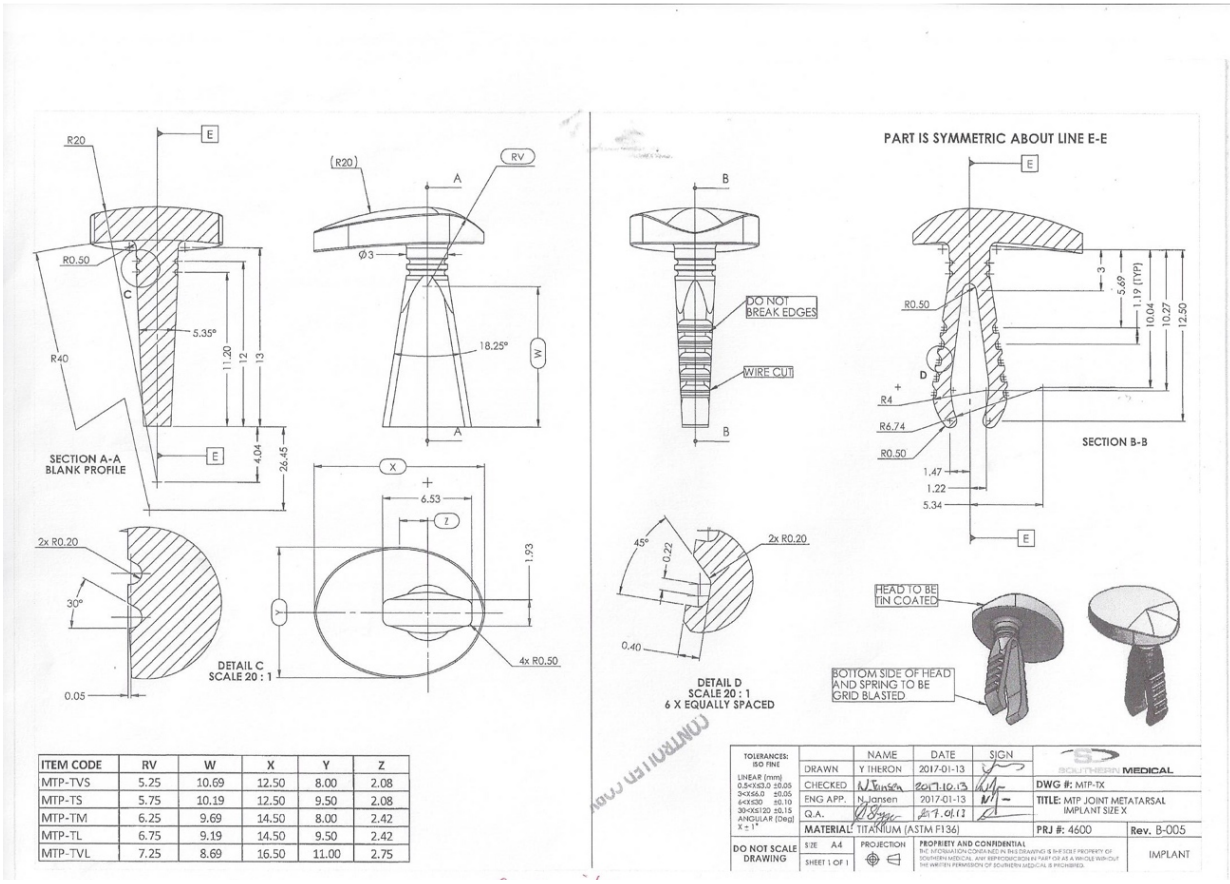

ITEM CODE	RV	W	X	Y	Z
MTP-TVS	5.25	10.69	12.50	8.00	2.08
MTP-TS	5.75	10.19	12.50	9.50	2.08
MTP-TM	6.25	9.69	14.50	8.00	2.42
MTP-TL	6.75	9.19	14.50	9.50	2.42
MTP-TVL	7.25	8.69	16.50	11.00	2.75

Figure 19a Final computer generated drawings of implants technical (metatarsal component)

The metatarsal metallic component is fixed to the metatarsal via a novel spring method that during insertion is under tension and expands within the metatarsal canal in a press-fit manner. The springs themselves are "barbed" to increase contact area thus maximizing the bony ingrowth. The bottom side of the head and sphere is grid blasted once again to maximise bony ingrowth. The convex articular surface has maximal contact with the corresponding concave meniscus (see **Figure 19a**). The component is made of titanium and its articular surface has a titanium nitride finish for improving its surface hardness.

8.1.2 The intervening mobile bearing is a meniscus with its metatarsal surface concave to correspond with the metatarsal articular surface.

The meniscus "clips" onto the phalangeal component via a peg which being small in diameter from the corresponding socket of the phalangeal component allows for a certain amount of play, thus providing stability and yet decreasing the torsional forces (see **Figure 19b**).

Although attached to the phalangeal component, the bearing is a completely rotating platform (360º) and also allows for multidirectional gliding at the distal surface.

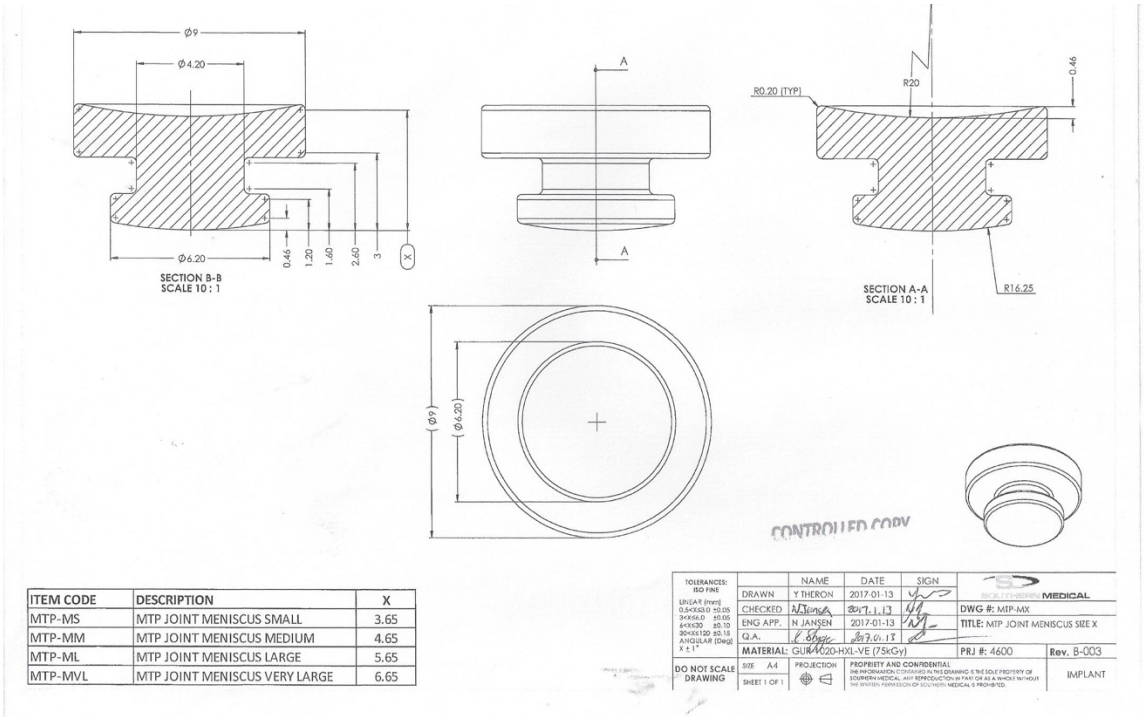

ITEM CODE	DESCRIPTION	X
MTP-MS	MTP JOINT MENISCUS SMALL	3.65
MTP-MM	MTP JOINT MENISCUS MEDIUM	4.65
MTP-ML	MTP JOINT MENISCUS LARGE	5.65
MTP-MVL	MTP JOINT MENISCUS VERY LARGE	6.65

Figure 19b Final computer generated drawings of implants technical (meniscus)

The meniscus is made of ultra-high molecular weight polyethylene (UHMWPE). They are of various thicknesses to achieve good soft tissue balance.

8.1.3 The phalangeal component is also made of titanium and a titanium nitride finish for its articulating surface with the meniscus. Its fixation into the proximal phalanx is by means of a screw system of various diameters and lengths.

Its articulating surface comprises of a socket to receive the meniscus as mentioned above (see **Figure 19c**).

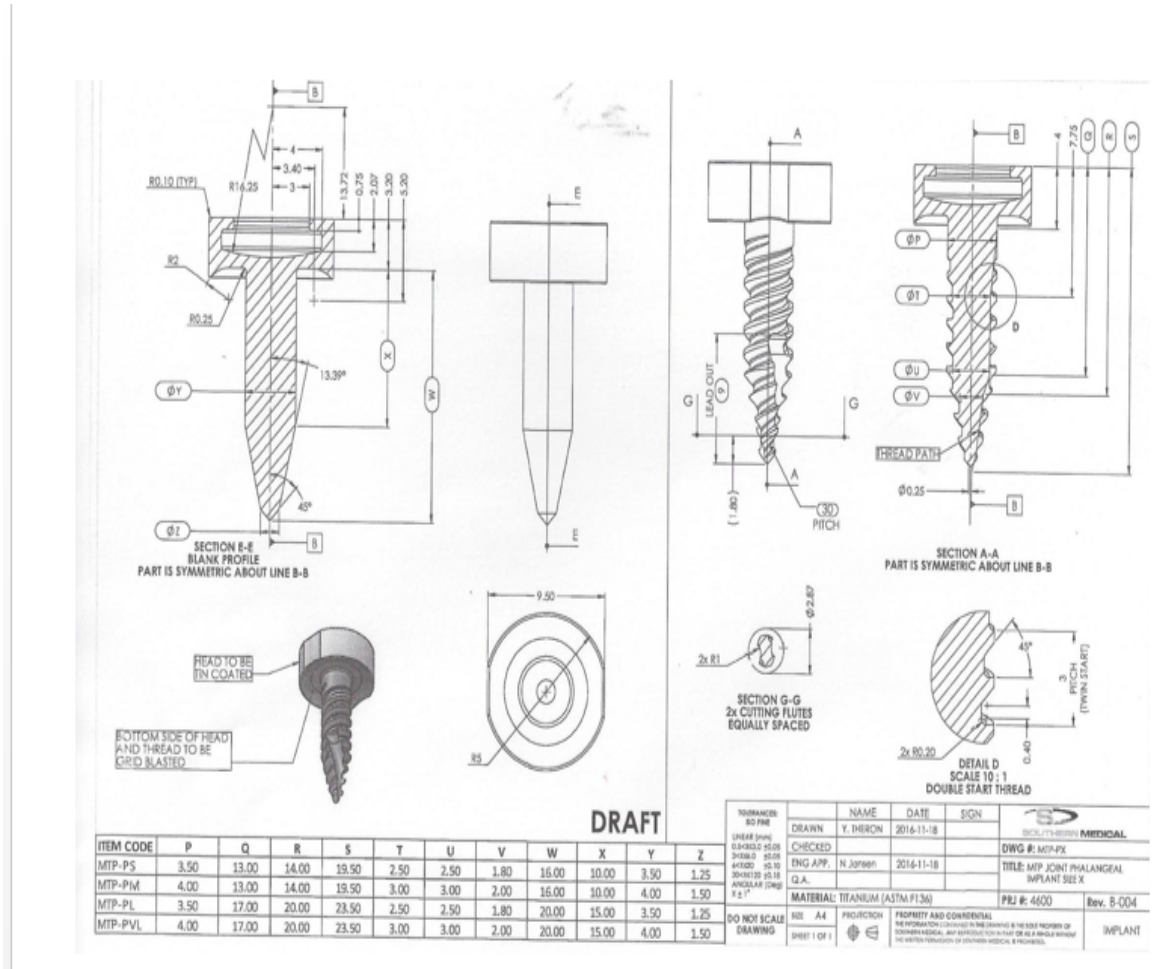

ITEM CODE	P	Q	R	S	T	U	V	W	X	Y	Z
MTP-PS	3.50	13.00	14.00	19.50	2.50	2.50	1.80	16.00	10.00	3.50	1.25
MTP-PM	4.00	13.00	14.00	19.50	3.00	3.00	2.00	16.00	10.00	4.00	1.50
MTP-PL	3.50	17.00	20.00	23.50	2.50	2.50	1.80	20.00	15.00	3.50	1.25
MTP-PVL	4.00	17.00	20.00	23.50	3.00	3.00	2.00	20.00	15.00	4.00	1.50

Figure 19c Final computer generated drawings of implants technical (phalangeal component)

8.1.4 The complete lesser metatarsophalangeal joint is shown in **Figure 20**.

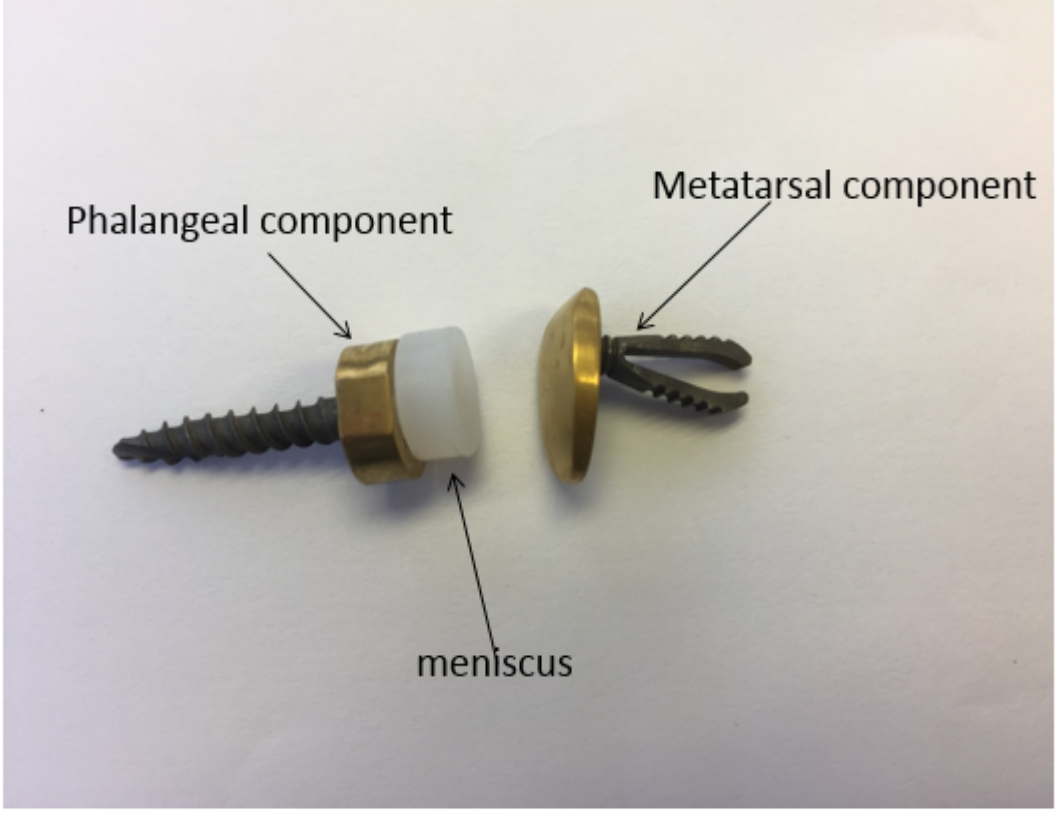

Figure 20 Final implants

8.1.5 The instrumentation is simple and comprises of a cannulated reamer, trial meniscus of various thickness and a punch (see **Figures 21a – c**).

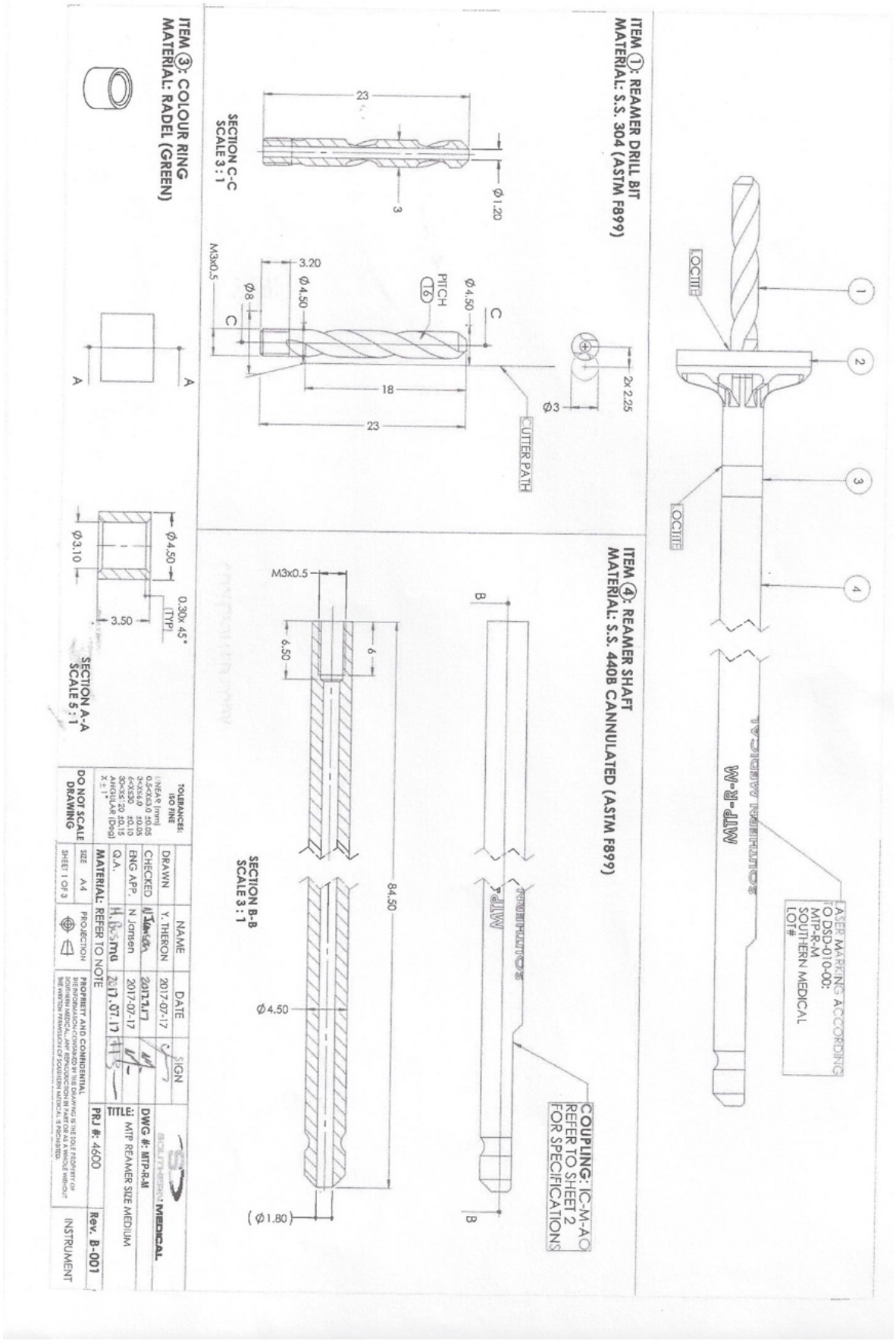

Figure 21a Instrumentation-technical

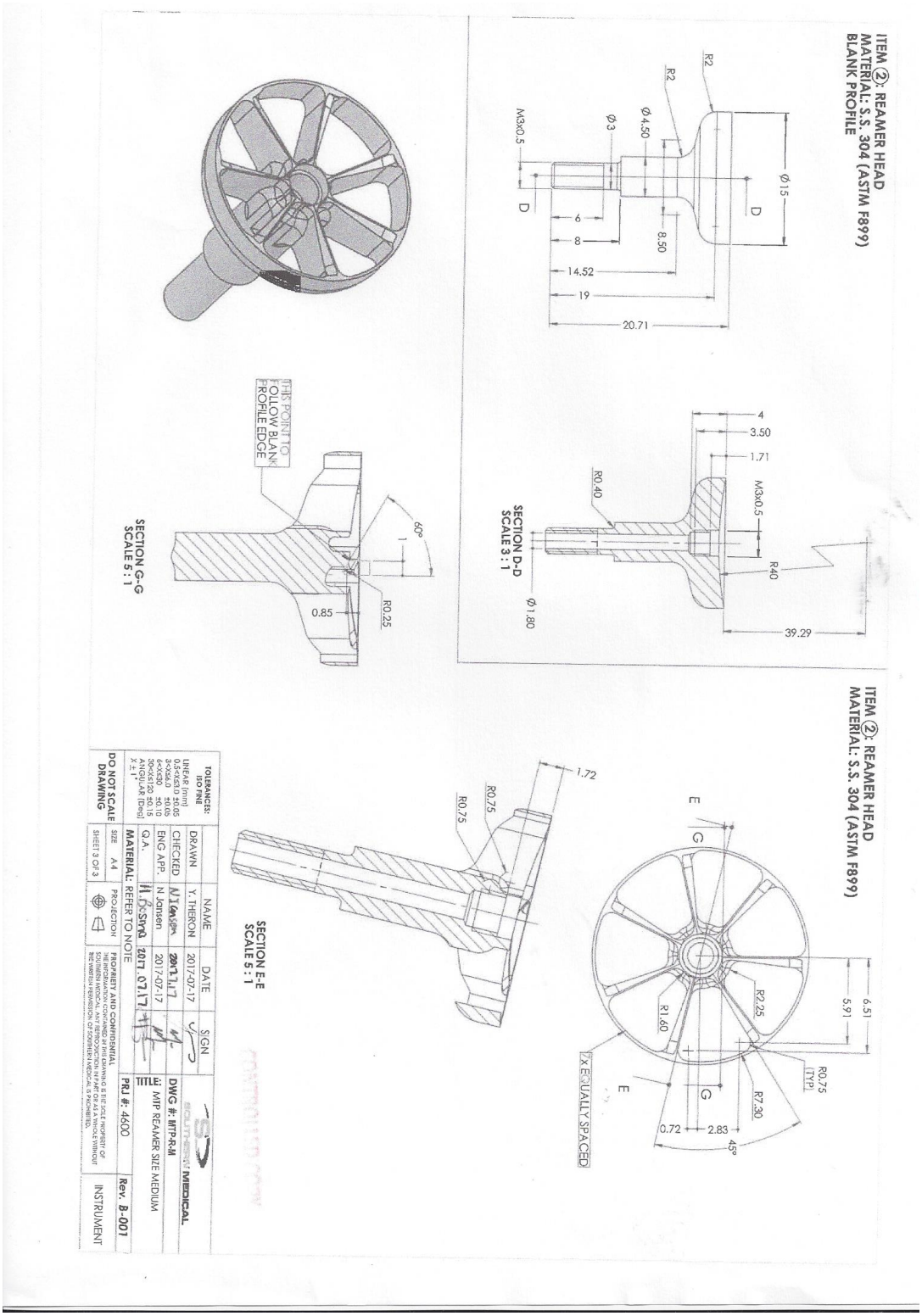

Figure 21b Instrumentation-technical

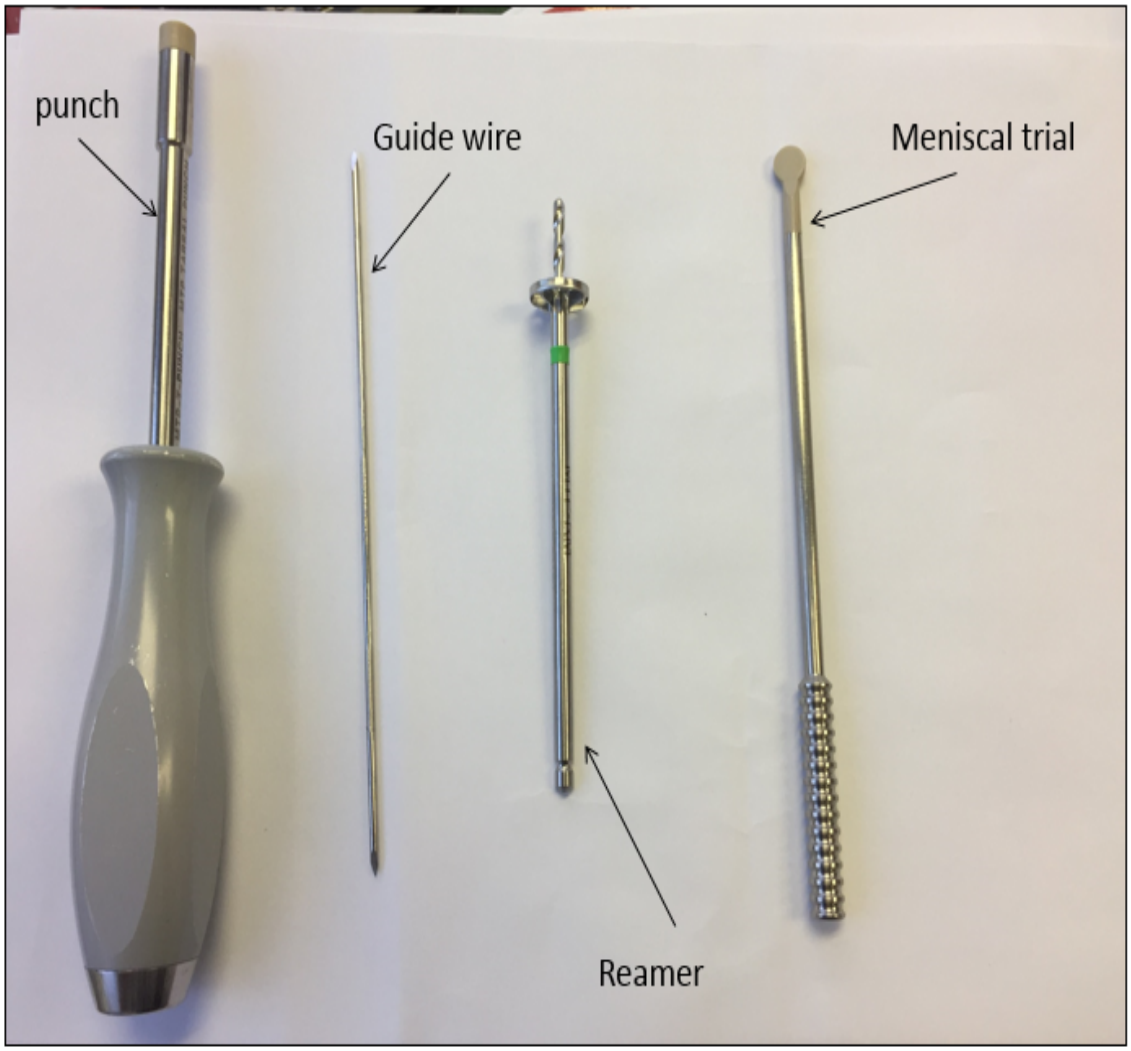

Figure 21c Instrumentation

8.2 Cyclical testing in the laboratory

For the purpose of testing this medical implant device, a mechanical test apparatus was designed in conjunction with the bio-engineers and manufactured to simulate the articulation of the metatarsophalangeal joint of the second toe in the human foot. The apparatus incorporates four stations for testing four implant devices of different sizes simultaneously (see **Figures 22a – d**).

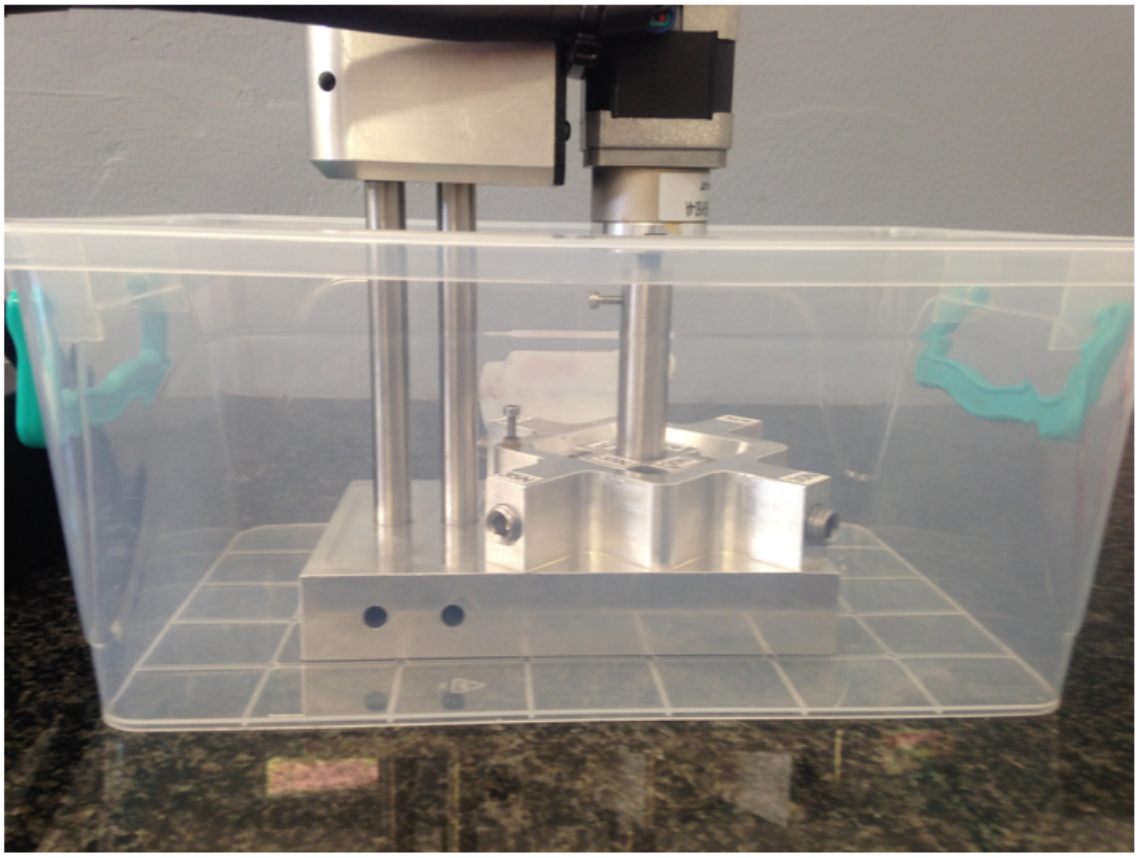

Figure 22a Cyclical testing instrumentation set-up

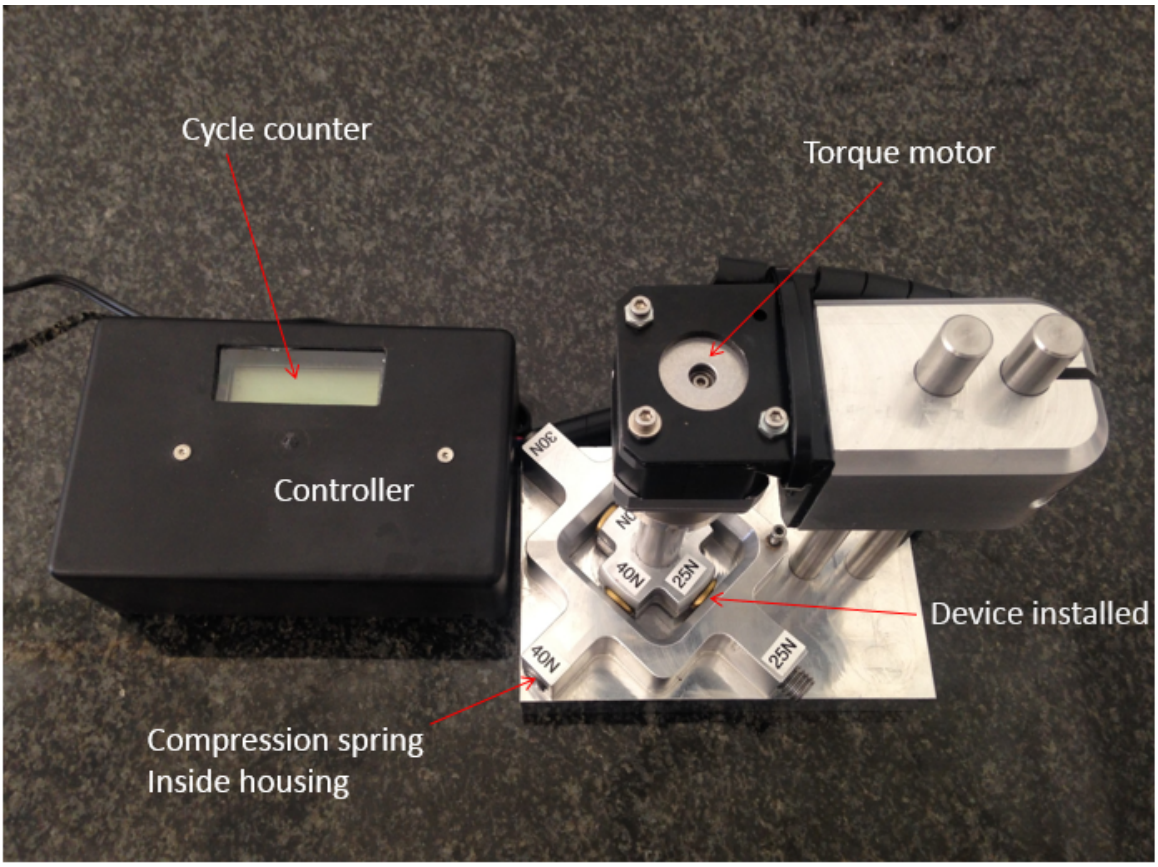

Figure 22b Cyclical testing instrumentation

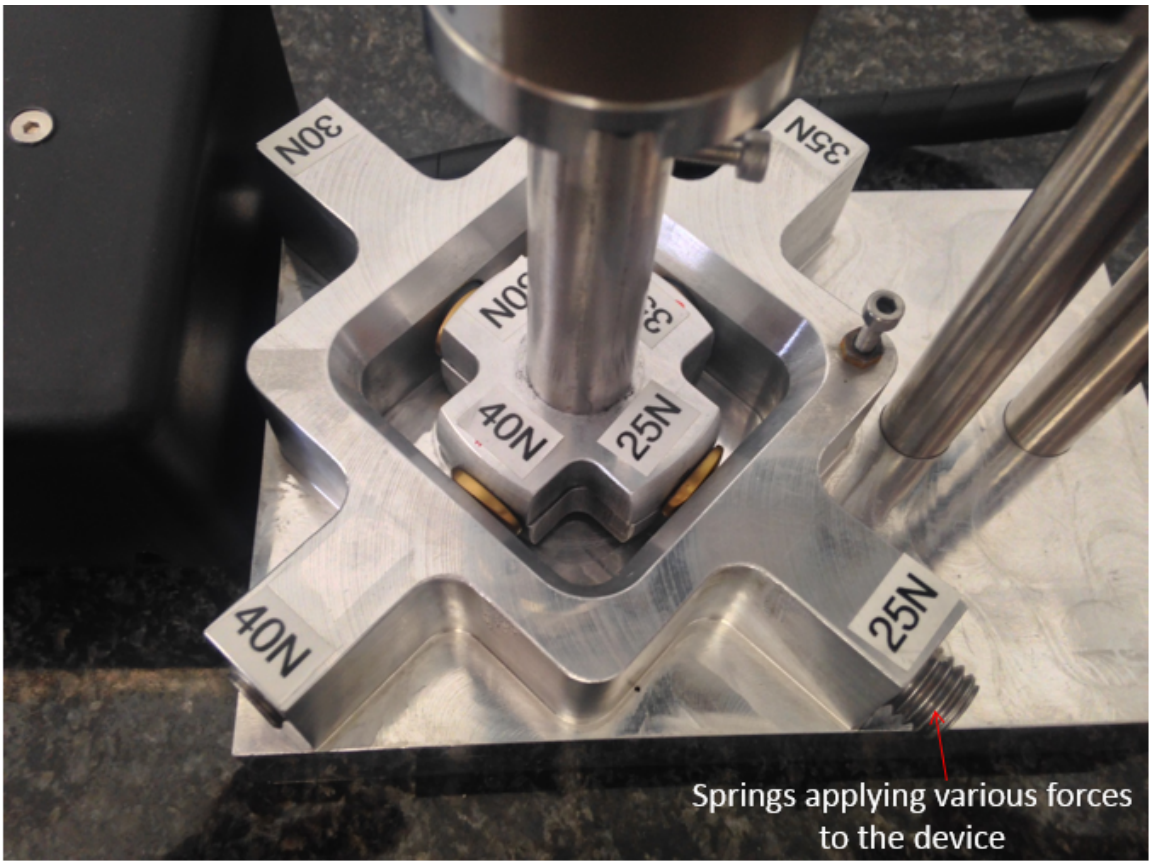

Figure 22c Cyclical testing instrumentation-close up of housing

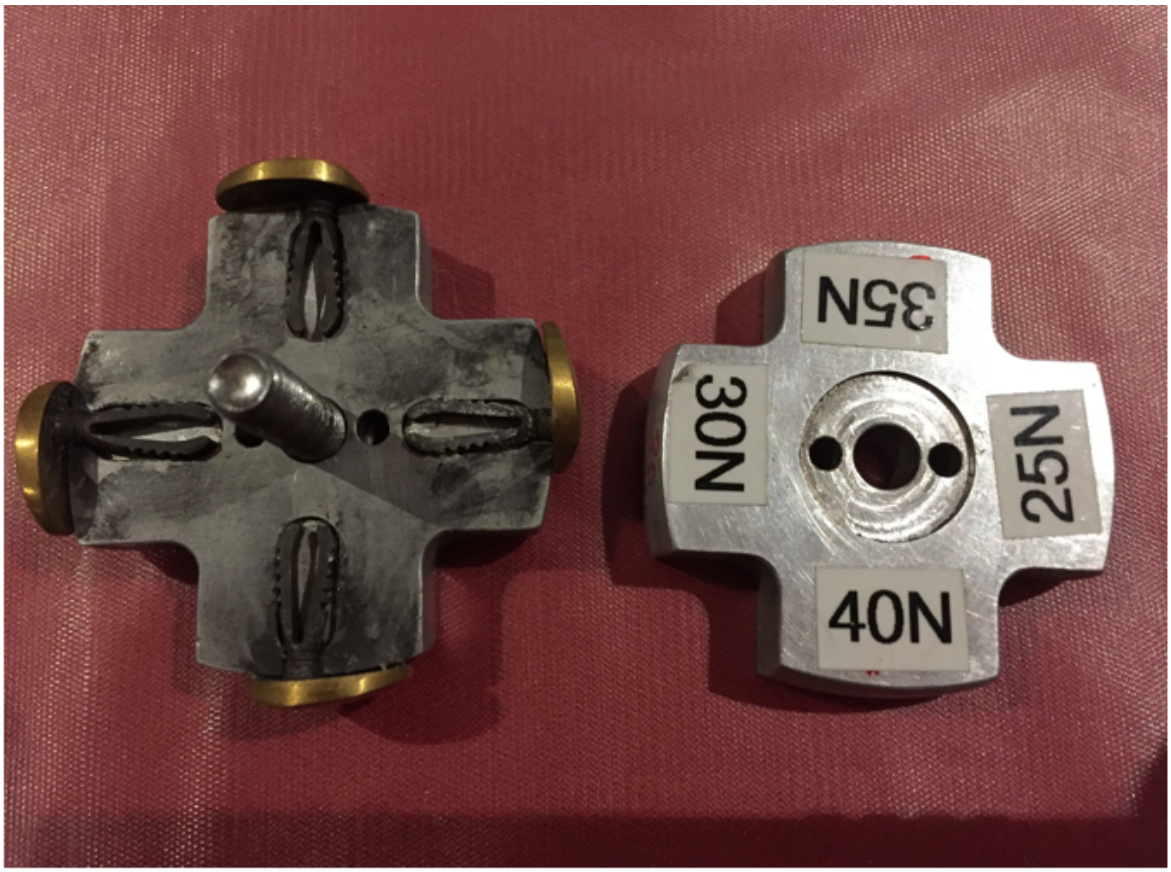

Figure 22d Cyclical testing instrumentation-devices in the housing

Four devices were subjected to compressive forces* of 25 N, 30 N, 35 N and 40 N respectively during cyclic articulation by means of cylindrical helical compression springs. The applied compression force was derived from the amount of deflection of the compression springs (see **Figure 23**)

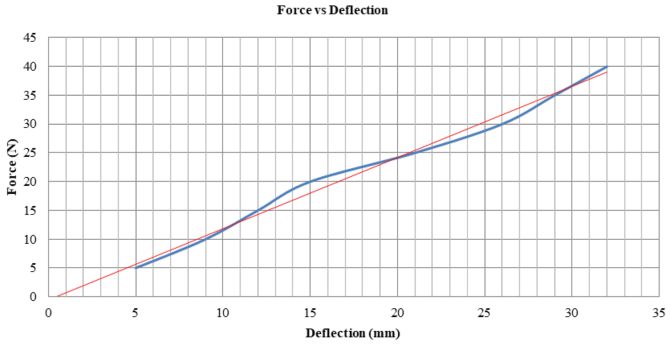

Figure 23 *The SI unit of force is Newton (N), which is defined as the force required to impart an acceleration of one meter per second squired to a mass of one kilogram. From Newton's second law (F= m.a), therefore 1 newton = (1 kg)x(1 meter per second squared). For engineering purposes the unit of acceleration "a" is 9.81 m/s². Example: 40N = 4.077 kg x 9.81m/s².

The articulation was generated using a 12 volt DC torsion motor capable of articulating each implant device to a pre-set angle at a frequency of 3 Hz. Testing was conducted in de-ionized water, during which each test station with installed implant device was submerged. Two series of tests were carried out on two sets of implants.

In series one four implant devices were subjected to 500 000 cycles, after which wear damage at the contact surface of each device was captured by means of photo graphic imaging. In series two a new set of implants was subjected to 5 000 000 cycles, after which wear damage at the contact surface of each device was captured.

8.3 Cadaver testing/trials

During the evolution of the implant design, fifteen cadavers were used over a period of 4 years. At the last cadaver trial stage when the final product was tested, four cadavers (four toes) were used. After the fourth specimen, it was noted that all the measurements were very similar and further specimens would prove to be unnecessary and unnecessarily expensive and time consuming (see **Figures 24a – b**).

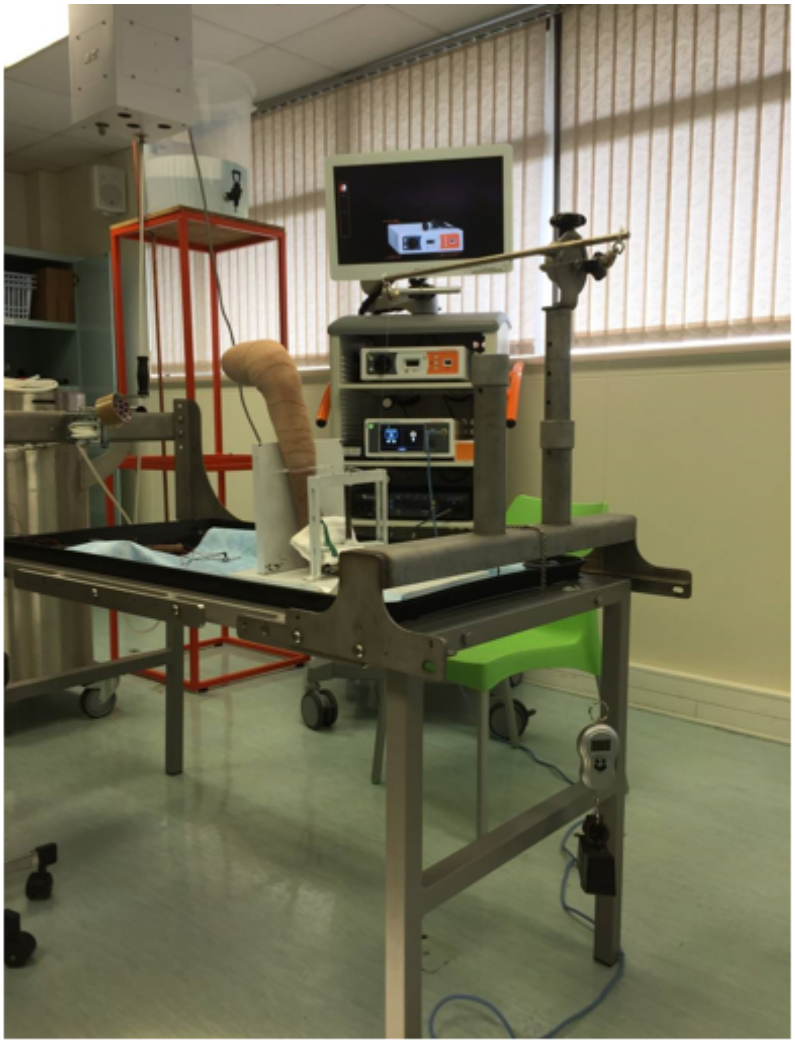

Figure24a Cadaver testing set up

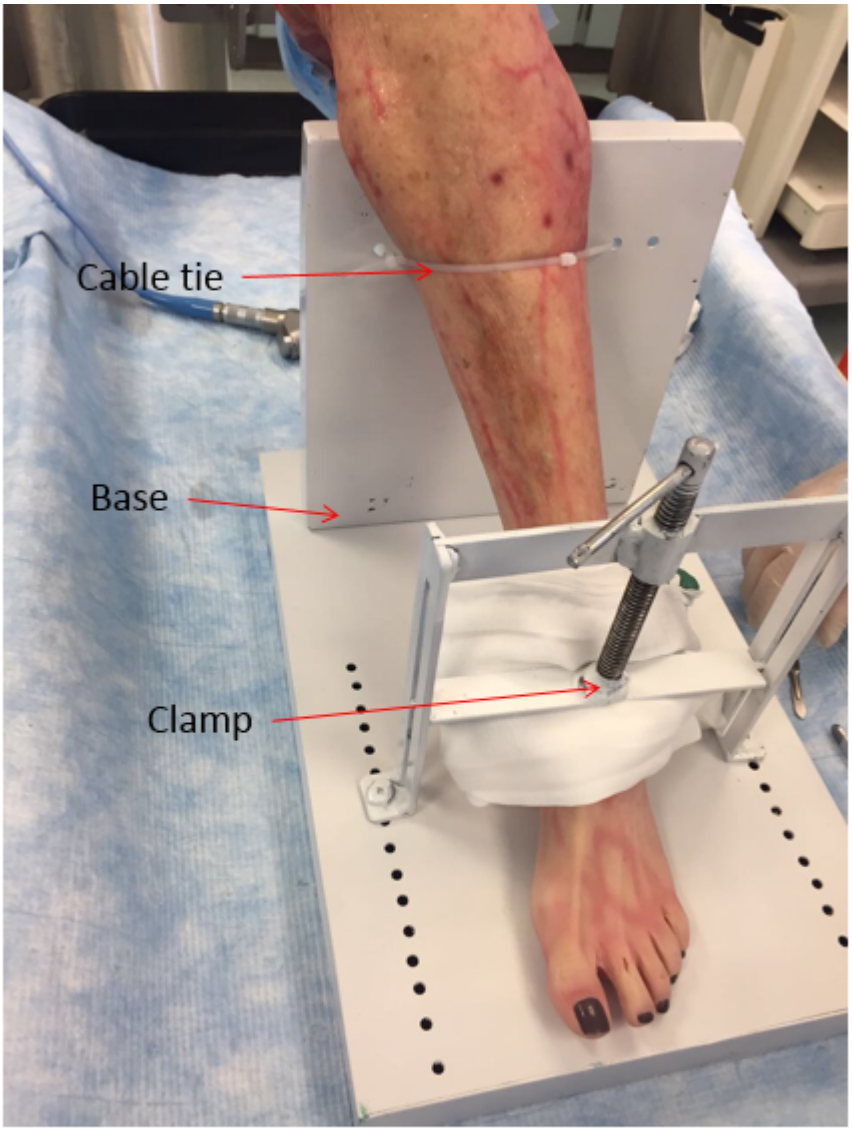

Figure 24b Cadaver testing set up

The hallux had to be disarticulated at the MTPJ joint in order to accurately test the implanted device (see **Figure 25**).



Figure 25 Hallux disarticulated

Only the II MTPJ was tested. There were 2 male (specimens 1 and 3) and 2 female (specimens 2 and 4). There was no lesser toe malalignment.

8.3.1 Surgical technique

The size of the implants are determined preoperatively by means of templates on radiographs and confirmed intraoperatively. Dorsal longitudinal midline incision centred over the lesser metatarsophalangeal joint (see **Figure 26a**).



Figure 26a Surgical technique-incision

The incision is deepened between the extensor digitorum longus and extensor digitorum brevis tendons down to capsule. The capsule is split longitudinally (see **Figure 26b**).



Figure 26b Surgical technique-joint exposed by cutting the capsule between the extensor tendons

The collateral ligaments are dissected off the metatarsal and proximal phalanx. Three mm of the base of the proximal phalanx is excised and the proximal phalanx is hyper plantar flexed. More bone is excised as required in order to maximize range of motion. The plantar plate is kept intact (see **Figure 26c**).



Figure 26c Two-three millimetres are taken off the base of the proximal phalanx

The margins of the metatarsal head is contoured by debridement in order to restore a spherical head.

A guide wire is driven into the metatarsal head to centralize the component in the shaft (see **Figure 26d**).

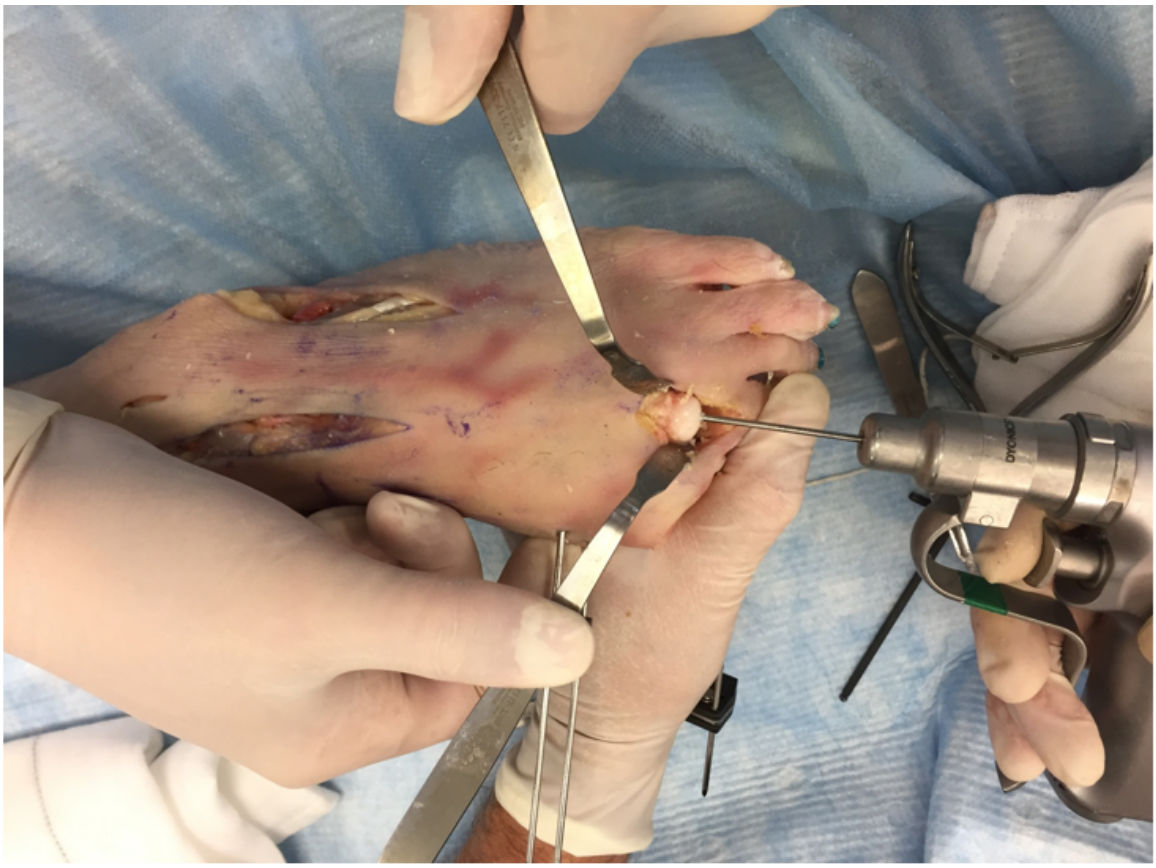

Figure 26d Guide wire placed in the metatarsal

The cannulated reamer is then used to prepare the metatarsal head (see **Figures 26e – f**).

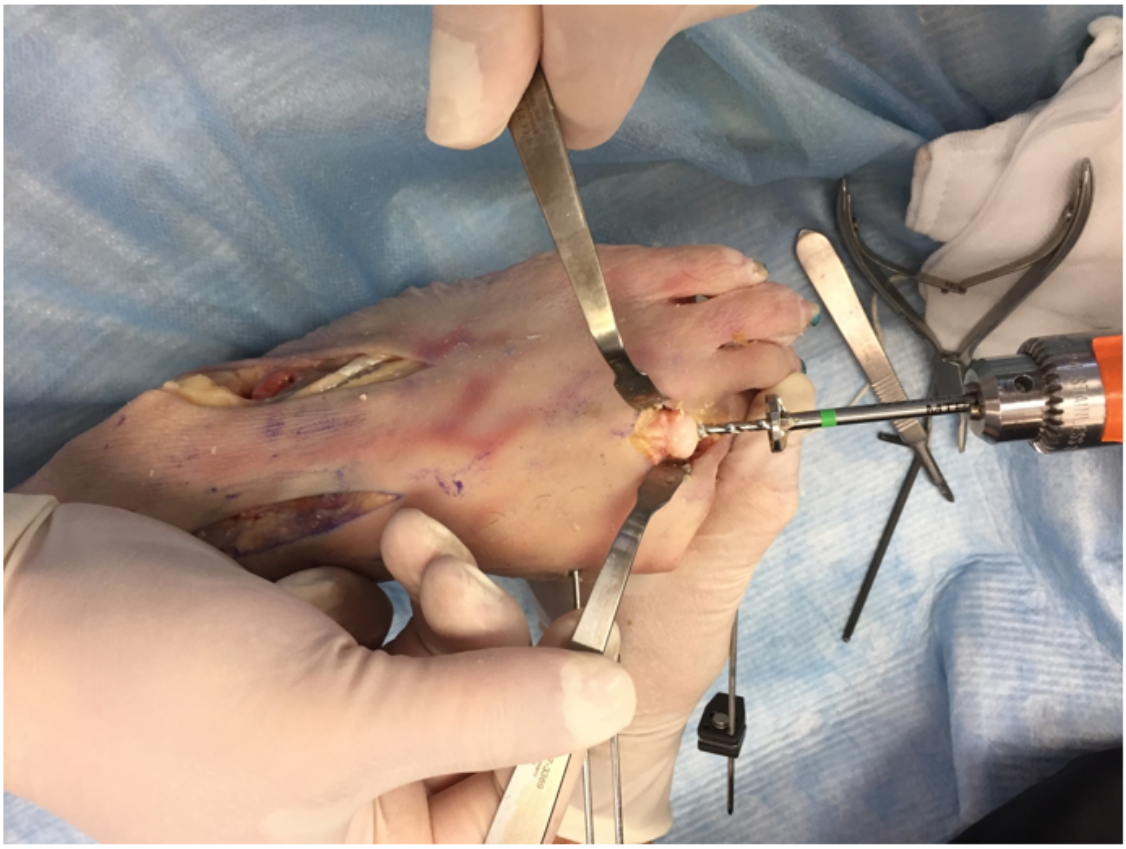

Figure 26e Cannulated reamer over the guide wire



Figure 26f Metatarsal head prepared

The metatarsal component is then inserted into the metatarsal head and gently impacted in place (see **Figure 26g**).

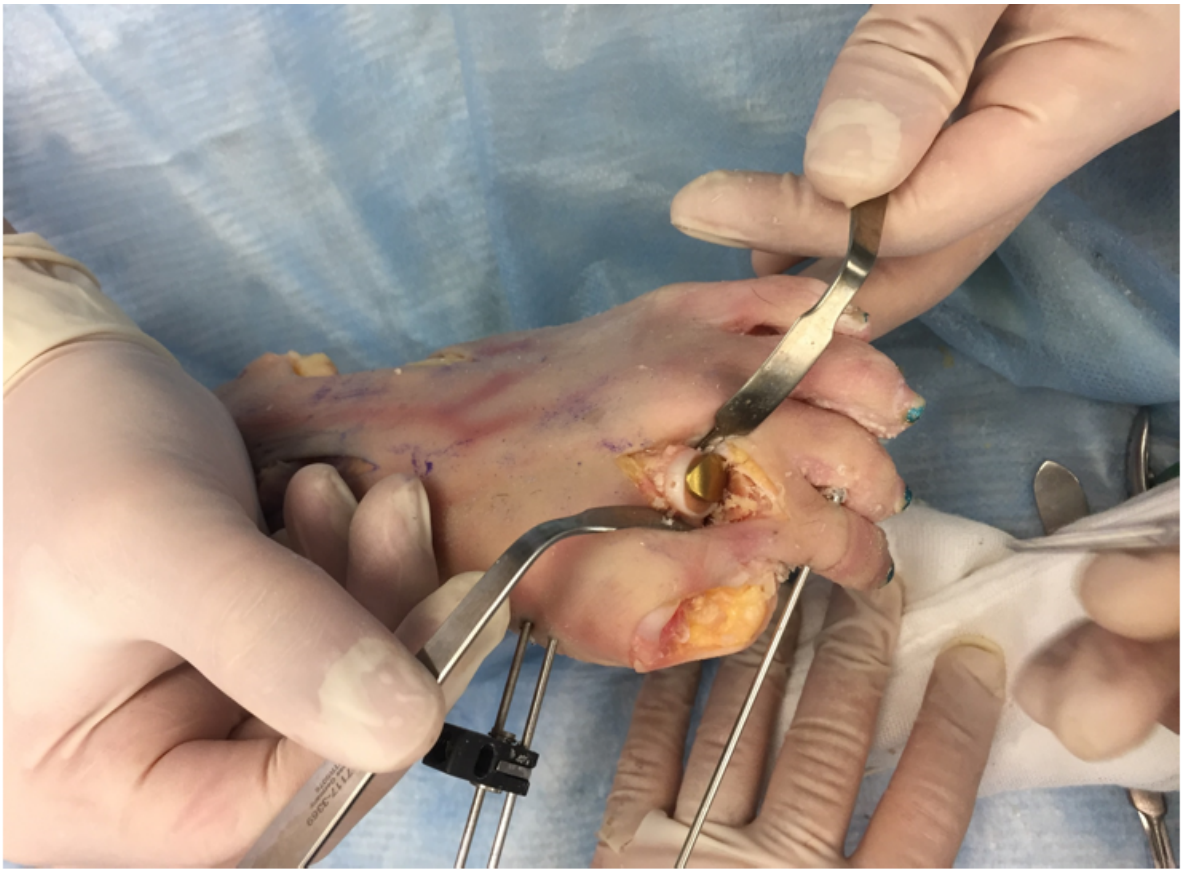

Figure 26g Metatarsal component in place

The phalangeal component is then screwed into the phalanx (see **Figure 26h**).

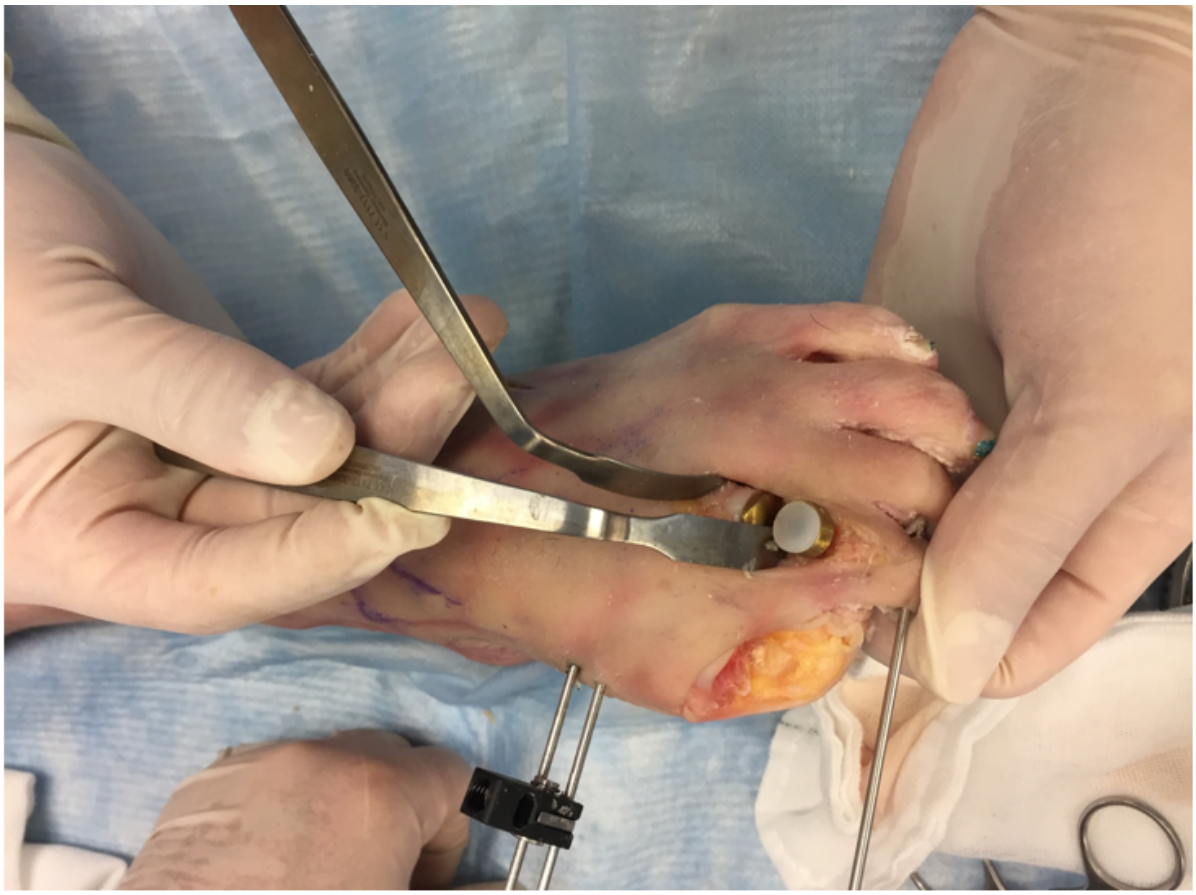

Figure 26h Phalangeal component and polyethylene insert in place

The trial implant is used to determine the size of the plastic bearing and once the soft tissue is well balanced, the correct size polyethylene is inserted into place (see **Figure 26i**).



Figure 26i Complete lesser metatarsophalangeal replacement in situ

Stability and range of motion is checked. The soft tissue is repaired and once again stability, alignment and range of motion are checked (see **Figure 26j**).



Figure 26j Skin closed

X-ray facilities were available with the last two cadaver specimens to obtain radiographs of the implant in the cadaver foot (see **Figures 27a – b**). These last two implants were inserted by a fellow foot and ankle trained orthopaedic surgeon.



Figure 27a Radiographic appearance of the implant (antero-posterior)



Figure 27b Radiographic appearance of the implant (lateral)

8.3.2 Range of motion measurements

The custom-made electrogoniometer and simulation software open-source Ardino Software (IDE) was used (see **Figures 28a – b**).

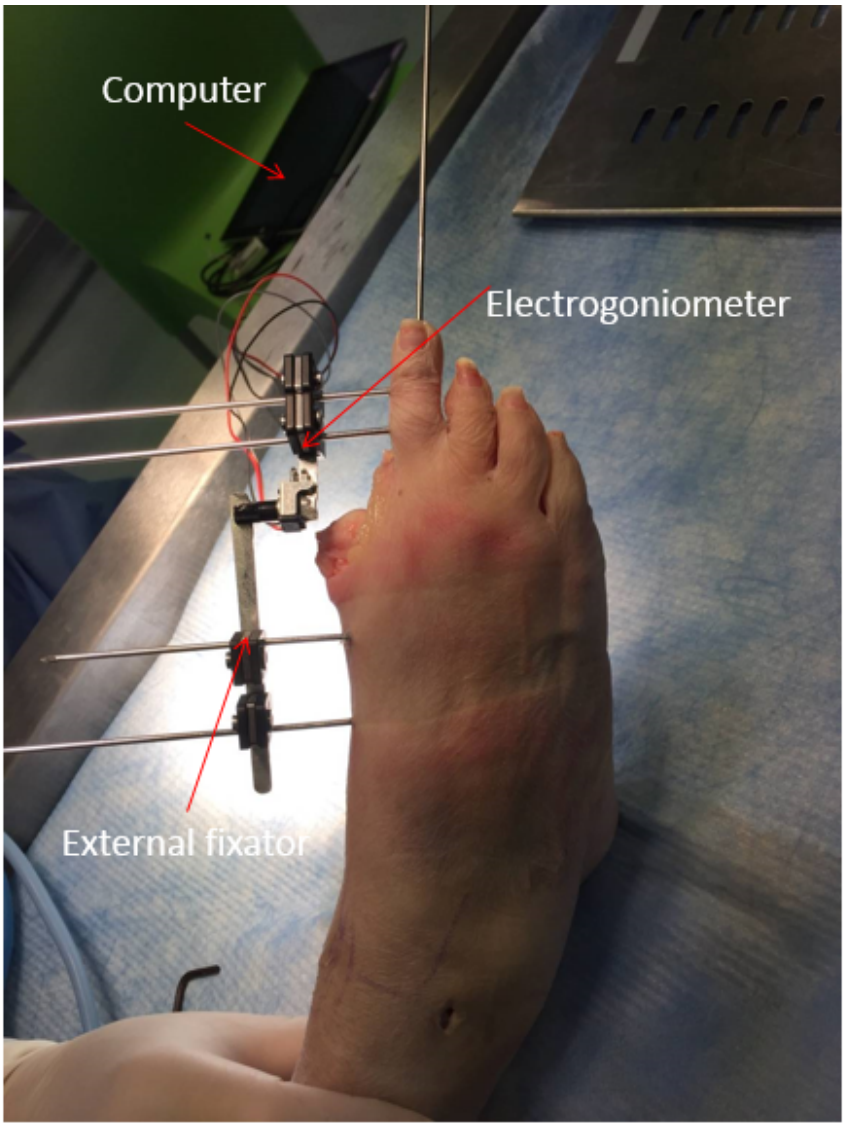

Figure 28a Electrogoniometer for range of motion measurement

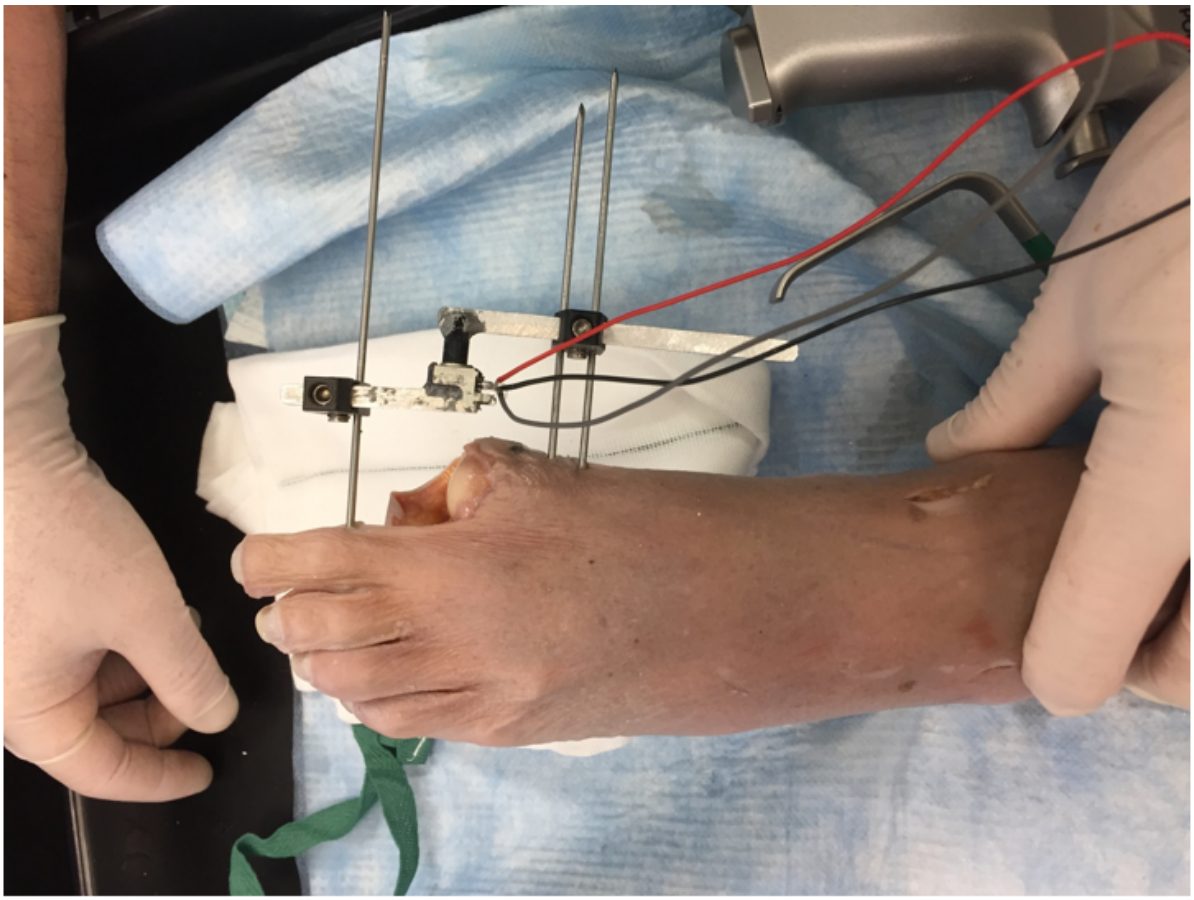

Figure 28b Electrogoniometer for range of motion studies

Range of motion of the pre-implanted and post implanted LMTPJ was recorded. Prior to the measurement, the LMTPJ was taken through several cycles in order to reach a point of resistance by the same examiner.

8.3.3 Stability

Stability of the pre- and post-implanted joints was performed clinically as well as using custom made devices. A screw implanted into the proximal phalanx was used for this purpose (see **Figure 29**).

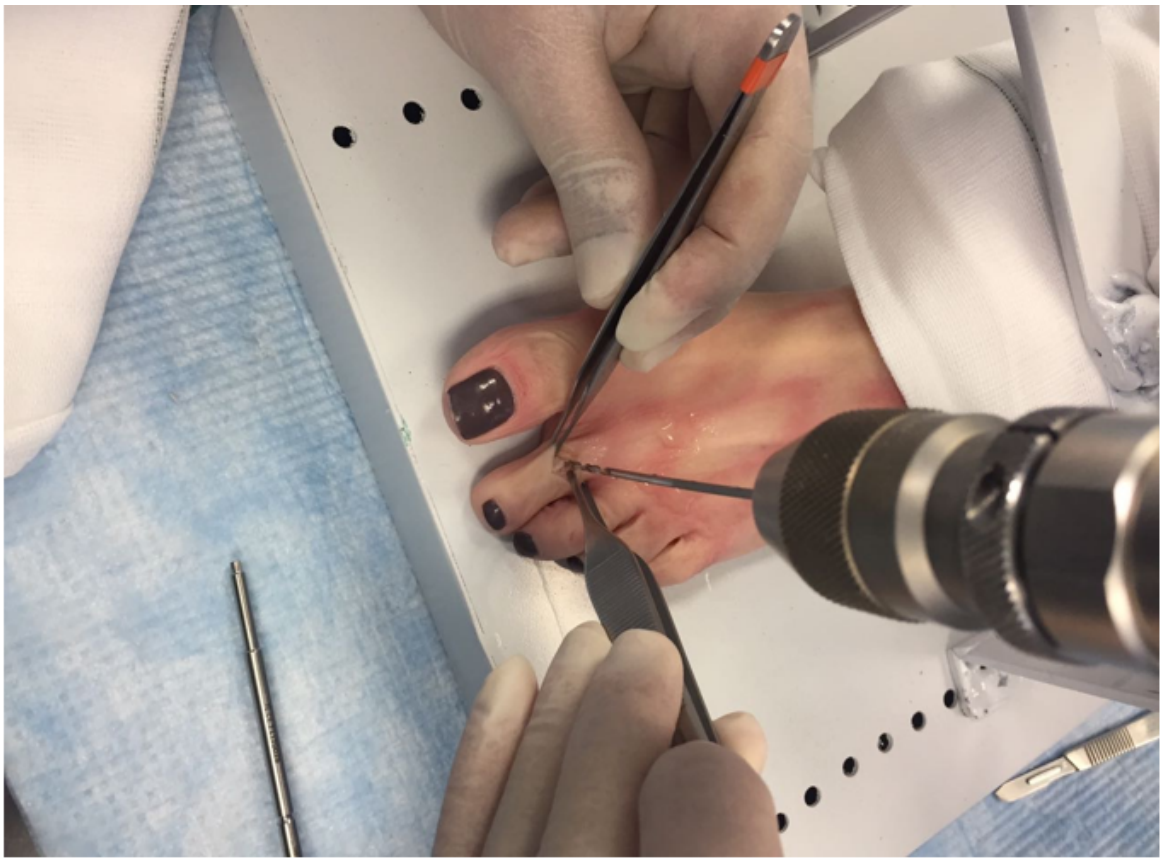

Figure 29 Screw implanted in proximal phalanx for the purpose of stability studies

In consultation with the engineers, the friction and friction losses through the set-up were negligible.

A weight force of 5 kg (F = m x a) equalling 49N was used. This force was shown on previous cadaveric studies to disrupt the soft tissue stabilizing factors of the LMTPJ and is thus seen as very conservative. On average the subluxation stability of the intact joints is around 25 N in a dorsal or superior direction and approximately 16 N dorsiflexion[12,13] (see **Figures 30a – b**).

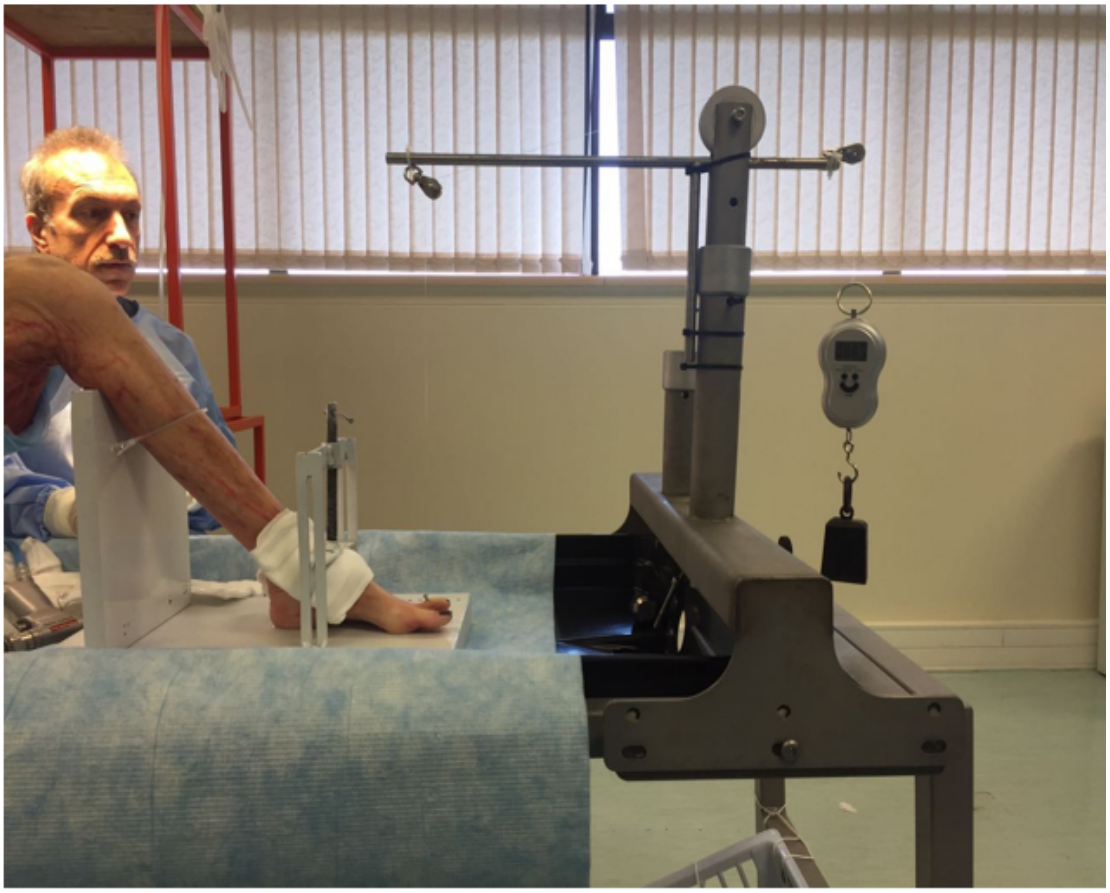

Figure 30a Stability testing at various weight force

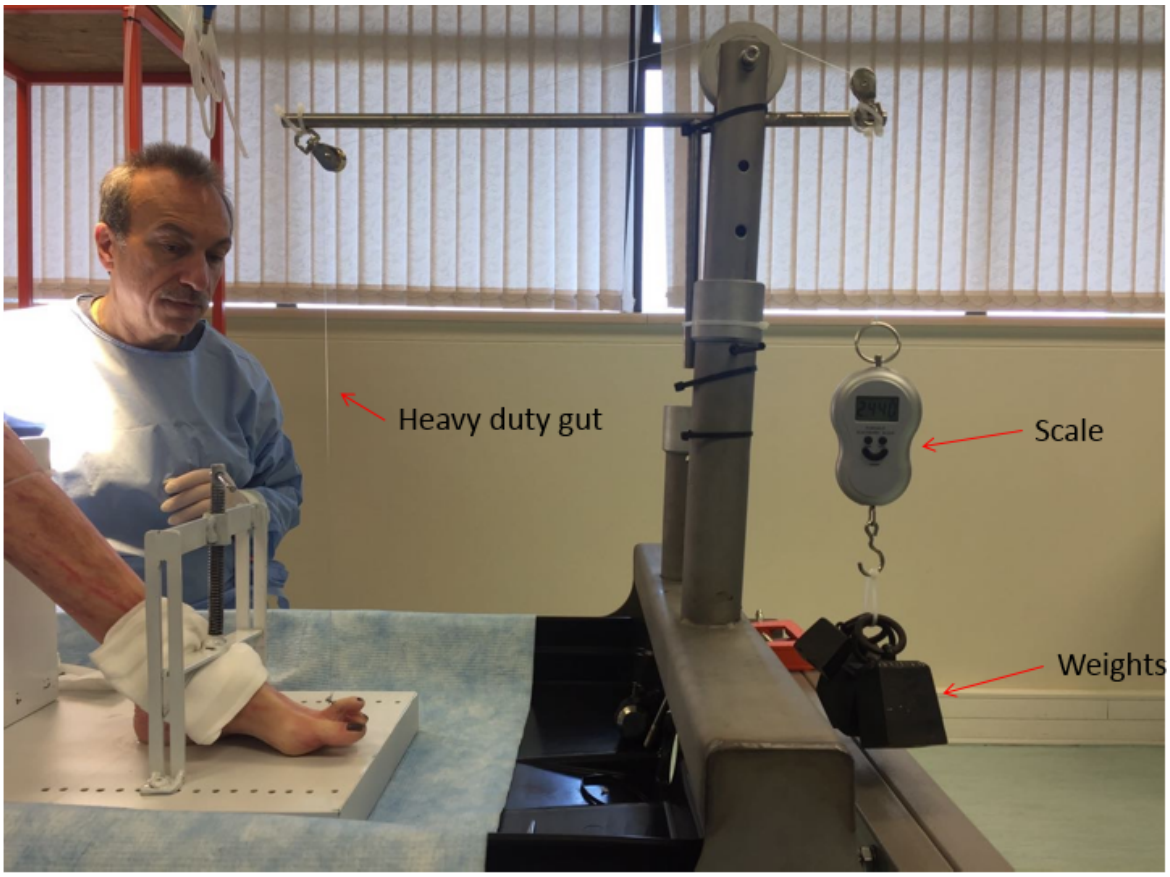

Figure 30b Stability testing at various weight force

9.0 RESULTS

Pre- and post-implant parameters were comparable in all respects. Over a period of four years, this novel lesser metatarsophalangeal joint total replacement was tested in fifteen cadavers as well as in a laboratory setting simulating an in vivo situation.

The implant was found to be simple in its surgical technique with little instrumentation, achieving a good functional range of motion and good stability in cadaveric tissue, albeit far inferior to living tissue. The ultimate trial will be in a clinical situation where currently no other long term, effective solution is available for a symptomatic arthritic lesser metatarsophalangeal joint in the foot.

9.1 Cyclical loading

The photographic imaging below shows insignificant changes to the surface condition to all four titanium test devices after 500 000 cycles. Very slight wear marks are evident on the polymer inserts (see **Figure 31a**).

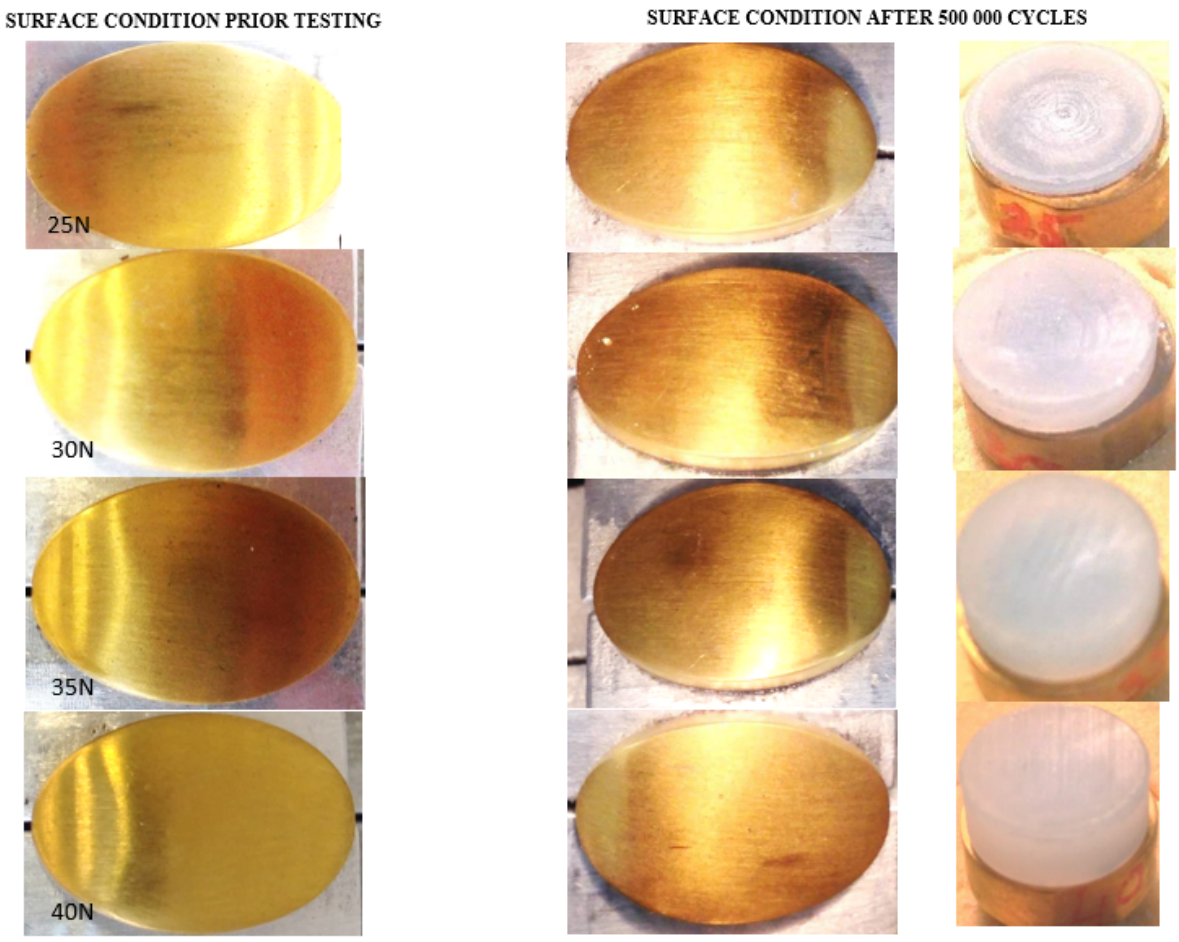

Figure 31a Wear of contact surfaces pre and post testing at 500 000 cycles

The photographic imaging below shows minor traces of wear to the surface condition to all four titanium test implant devices after 5 000 000 cycles. Significant wear is evident on all four polymer inserts after testing. The table below shows the measurements pre and post endurance testing (see **Table 1**). Measurements were carried out with a TESAMASTER Standard High Precision Micrometer with Digital Counter reading down to 1µ.

Table 1 Measurements pre and post endurance testing after 5 000 000 cycles at excessive forces

Implant size	Original Thickness (mm)	Final Thickness (mm)
1 x 9mm -25N	1.00	0.45
2 x 9mm - 30N	2.00	1.55
3 x 9mm -35N	3.00	2.55
4 x 9mm - 40N	4.00	3.56

The amount of wear on the four polymer inserts of each implant device is shown in the following photograph (see **Figure 31b**).

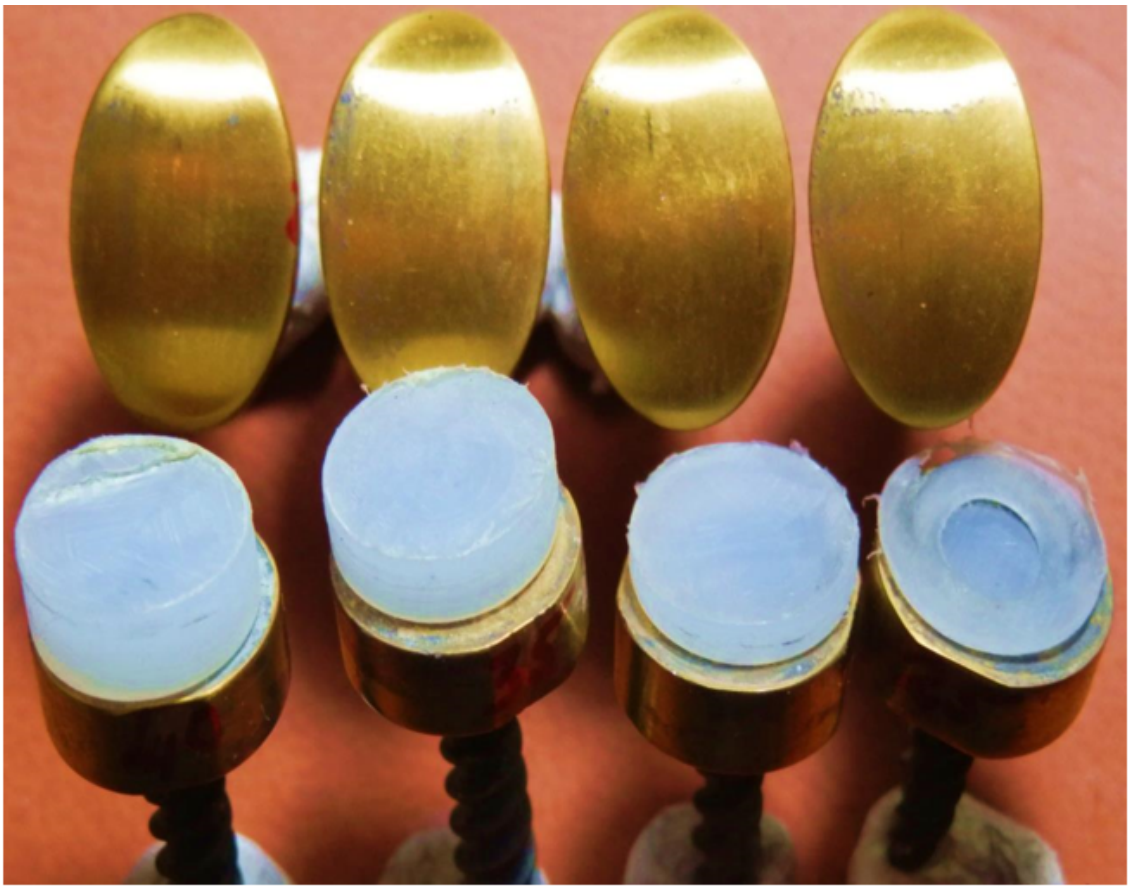

Figure 31b Wear of contact surfaces pre and post testing after 5 000 000 cycles at excessive forces

Discussing the results with the bioengineer, the researcher felt that the severe wear and tear after 5 000 000 cycles was due to several factors:

1) Excessive forces, far beyond the physiological forces.

2) The reaction of the metallic components of the testing device, particularly the steel compression cylinders, contaminated the de-ionized water creating a hostile environment to the articulating surfaces.

3) Foreign debris entering the test environment.

In order to eliminate these possible causes of the severe wear and tear, four new implants were tested. These new implants were subjected to 5 million cycles each at compressive forces of 3 N, 4 N, 6 N and 8 N respectively. In order to prevent contamination of the deionized water, the steel compression springs used to apply forces of 25 N, 30 N, 35 N and 40 N were replaced with silicone compression cylinders.

In addition the test apparatus was covered for the duration of testing to prevent any foreign debris from entering the test environment. Except for the replacement of the steel compression springs and the lower compression forces the same procedure was followed as for the first two procedures.

The results were far more rewarding. From the photographic images captured prior to (see **Figure 32a**) and after testing, it is clear that almost no sign of wear or surface deformation is visible on all four devices tested at the respective compression forces. Moreover the contact surfaces of all four titanium implants show no discolouring after 5 million cycles (see **Figures 32b – d**). Thickness measurements prior and after testing showed also no changes measured in

millimetre (see **Table 2**). Finally the applied forces without any contamination of the deionized water were not able to cause notable wear after 5 million cycles.

Table 2 Measurements pre and post endurance testing after 5 000 000 cycles at physiological forces

Implant size	Original Thickness (mm)	Final Thickness (mm)
1 x 9mm -3N	1.00	1.00
2 x 9mm - 4N	2.00	2.00
3 x 9mm -6N	3.00	3.00
4 x 9mm - 8N	4.00	4.00



Figure 32a The four new devices prior to testing



Figure 32b The four implants after completing 5 000 000 cycles at physiological forces

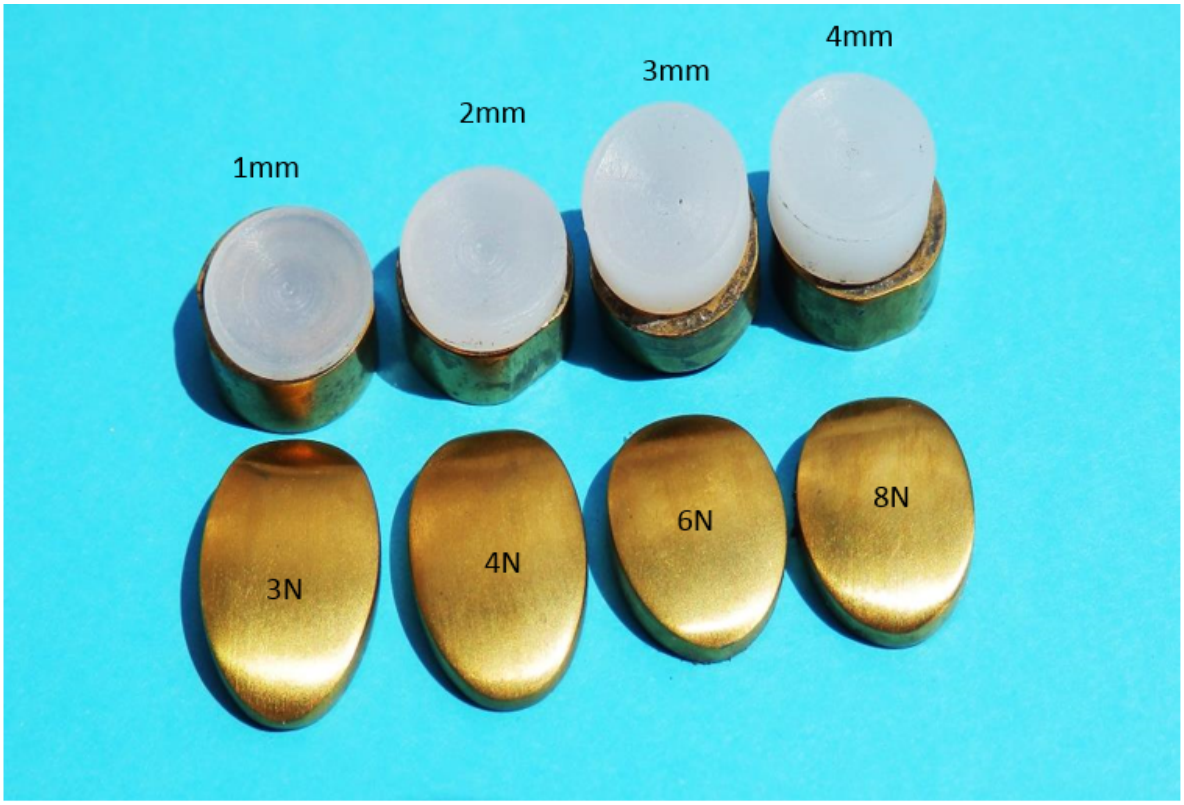

Figure 32c The four implants each with the respective compressive forces as well as the sizes after completing 5 000 000 cycles at physiological forces



Figure 32d Close up of the implants after completing 5 000 000 cycles at physiological forces

9.2 Range of motion

The LMTPJ dorsiflexion both pre- and post-implant varied widely from 12° – 52° and 20° – 41° respectively with an average of 28.5° and 28.9° respectively. The LMTPJ plantar flexion also varied widely from 22° – 52° and 8° – 35° respectively with an average of 33.8° and 20.8° respectively (see **Tables 3 and 4**).

Table 3 Lesser metatarsalpalangeal joint range of motion : pre and post implant

	PRE IMPLANT				POST IMPLANT			
SPECIMEN	**1**	**2**	**3**	**4**	**1**	**2**	**3**	**4**
DORSIFLEXION (degrees)	**12,34**	**12,65**	**52,5**	**31,6**	**21,89**	**20,15**	**32,48**	**40,95**
PLANTAR FLEXION (degrees)	**28,66**	**22,02**	**32,75**	**51,7**	**12,32**	**28,45**	**8,1**	**34,5**

Statistical analysis

To describe the data points for the angles for the range of motion pre- and post-implant, a t-test was computed to determine the difference in the average range of motion pre- and post-implant.

A total of 4 dorsiflexion and plantar flexion measurements were included for the study. **Table 4** shows that there was no significant difference in the average range of motion pre- and post-implant (note that a larger sample size could provide more clarity) (see **Table 4**).

Table 4 The difference in the average range of motion pre and post implant

	Pre-implant		Post-implant		
Motion	Mean(SD)	95%C I	Mean (SD)	95% C I	p-value
Dorsiflexion	33.78 (12.74)	13.51 - 54.05	19.84 (11.78)	0.78 - 38.91	0.1619
Plantar flexion	27.27 (19.08)	-3.09 - 57.63	26.62 - (12.52)	6.70 - 46.54	09561

9.3 Clinical stability

Stability was divided into stable, lax and dislocatable. Besides the one pre-implant specimen which was lax, all the others were stable both pre- and post-implant. The lax pre implant joint most probably stabilized with the soft tissue balance achieved with the implant (size of meniscus) (see **Table 5**).

Table 5 Lesser metatarsophalangeal joint stability clinically: pre and post implant

	PRE IMPLANT			POST IMPLANT		
	STABLE	LAX	DISLOCATABLE	STABLE	LAX	DISLOCATABLE
1	X			X		
2	X			X		
3		X		X		
4	X			X		

9.4 Lesser metatarsophalangeal joint stability with 5 kg force (49 N)

All the specimens both pre- and post-implant were stable in dorsal displacement and dorsiflexion using a 5 kg weight (49 N). This is in contradiction to a previous cadaveric study[12,13](see **Table 6**).

Table 6 Lesser metatarsophalangeal joint stability with 5kg force (49N): pre and post implant

	PRE IMPLANT						POST IMPLANT					
	DORSAL DISPLACEMENT			DORSIFLEXION			DORSAL DISPLACEMENT			DORSIFLEXION		
SPECIMEN	STABLE	LAX	DISLOCATABLE	STABLE	LAX	DISLOCATABLE	STABLE	LAX	DISLOCATABLE	STABLE	LAX	DISLOCATABLE
1	X			X			X			X		
2	X			X			X			X		
3	X			X			X			X		
4	X			X			X			X		

10.0 DISCUSSION

Lesser metatarsophalangeal joint arthritis (primarily Freiberg's infraction and post traumatic), although not a frequent occurrence in the general population, often afflicts younger people requiring surgical intervention once conservative therapy fails. To date there is no effective long term treatment. When conservative management ultimately fails, the surgical options are few with a poor long term prognosis. There have been no recent advances in LMTPJ arthritis treatment reported in recent literature.

The idea of a total LMTPJ replacement arthroplasty seems to be a feasible option for the isolated arthritic LMTPJ. Although not subjected to large axial loads, it still needs to adhere to the basic principles of replacement implants and good soft tissue tension restoration. This novel three-component device has high conformance and large bearing surfaces (low constraint and low contact stress); mobile bearing yet is stable with minimal resection and soft tissue dissection, thus allowing for good soft tissue restoration.

The materials used (titanium and UHNWPE) are accepted internationally and the titanium nitride is proven to enhance surface hardness. The sizes of the metallic components (metatarsal and phalangeal) were determined by the accurate measurement of the respective bones on skeleton specimens. The metatarsal component is unique in its fixation. It has a "spring" intra medullary fixation with added "barbs" to increase the contact area. The articulation is likewise

unique in its attachment to the phalangeal component in that although fixed, the mobile bearing is a completely rotating platform and allows a certain amount of multidirectional gliding and substantial flexibility over a wide range of position and angles. The phalangeal fixation remains of the screw in type.

There are few cadaveric studies pertaining to general loading and forces on the LMTPJ and there are no available cadaveric studies for LMTPJ replacement arthroplasty. Often implants in the development phase lack cadaveric trials and are only subjected to cyclical loading followed by clinical trials. In the development of this replacement prosthesis, was not only subjected to extensive cyclical loading at far higher forces than in vivo, but also implanted into cadaveric feet. These in vitro cadaveric studies allowed the researcher to develop and perfect the surgical technique, record the range of motion and determine the stability both clinically and by means of applied forces.

As no such testing was done before, all instrumentation for the above testing was developed by the researcher in association with appropriate bio-engineers.

Considering published articles requiring cadaver utilization, this research presents an in vitro study which utilized 15 cadavers, culminating in 6 cadavers in the final stages (four for technique testing and two for technique and X-rays by an independent foot and ankle surgeon).

There was very little difference between the four cadavers subjected to the testing and the researcher decided that there was no point obtaining more results.

The researcher cautions the extrapolation of cadaver data to the clinical setting.

11.0 CONCLUSION

This novel LMTPJ replacement arthroplasty has been developed to fill the void of surgical options in the isolated arthritic LMTPJ. The in vitro studies have shown it to be effective, with minimal specialized instrumentation and good surgical reproducibility. This study implant is the basis for clinical trials. For clinical trials, as with other replacements, the "ideal" candidate has to be sought, followed by the stringent principles of replacements and an extensive informed consent. The relatively large bearing areas between the components will hopefully contribute to the longevity of the replacement arthroplasty but this will remain to be seen. In the event of implant failure with no possibility of a revision, the implant is removed and the joint is left as an "excision arthroplasty" which although not ideal has been described as a surgical option for Freiberg's infraction or degenerative joint disease.

REFERENCES

1. Sarrafian SK. Anatomy of the Foot and Ankle: Descriptive, Topographic, Functional 2nd edition. Philadelphia: J.B. Lippincott Company, 1993.
2. Jahss MH. Disorders of the Foot and Ankle. 2nd edition. Philadelphia: W.B. Saunders Company, 1991.
3. Isman RE, Inman VT. Anthropometric studies of the human foot and ankle. Bull Pros Res. Spring 1969.
4. Coughlin MJ, Mann RA, Saltzman CL. Surgery of the Foot and Ankle. 8th edition, Volume I, Philadelphia: Mosby Elsevier, 2007.
5. Dawe EJC, Davis J. Anatomy and biomechanics of the foot and ankle. Orthopaedics and Trauma 2011; 25:4.
6. Ellis T S. The Human foot, Its form and structure, Functions and Clothing. pp1 – 113. London, Churchill, 1889.
7. Abboud RJ. Relevant foot biomechanics. Current Orthopaedics 2002; 16, 165 – 179.
8. Lapidus PW. Kinesiology and mechanical anatomy of the tarsal joints. Clin Orthop. 1963; 30: 30.
9. Cavanagh PR, Rodgers MM, Liboshi A. Pressure distribution under symptom – free feet during barefoot standing. Foot Ankle 1987; 7(5): 262-276.
10. Bojsen-Møller F. Calcaneo-cuboid joint and stability of the longitudinal arch of the foot at high and low gear push-off. J Anat. 1979; 129: 165-176.
11. Betts RP, Franks CI, Duckworth T. Analysis of pressures and loads under the foot. Part 2: Quantification of the dynamic distribution. J Clin Physiol Meas. 1989; 1: 113.
12. Suero EM, Meyers KN, Bohne WHO. Stability of the metatarsophalangeal joint of the lesser toes: A cadaveric study. J Orthopaedic Res Ens. 2012 December; 1995 – 1998.
13. Chalayon O, Chertman C, Guss AD, Saltzman CL, Nickisch F, Bachus KN. Role of plantar plate and surgical reconstruction techniques on static stability of lesser metatarsophalangeal joints: A biomechanical study. Foot Ankle Int. 2013 June 17. [Epub ahead of print]
14. Bojsen-Møller F, Flagstad KE. Plantar aponeurosis and internal architecture of the ball of the foot. J Anat. 1976; 121 (3): 599-611.

15. Freiberg A. Infraction of the second metatarsal bone, a typical injury. Surg Gynecol Obstet. 1914; 19: 191 – 193.

16. Carmont MR, Rees RJ, Blundell CM. Current concepts review: Freiberg's disease. Foot Ankle Int. 2009 Feb; 30 (2): 167 – 176.

17. Smillie IS. Treatment of Freiberg's infraction. Proc R Soc Med. 1967; 60: 29 – 31.

18. Helal B, Gibb P. Freiberg's disease: A suggested pattern of management. Foot Ankle 1987; 8: 94 – 102.

19. Katcherian DA. Treatment of Freiberg's disease. Orthop Clin North Am. 1994 January; 25(1): 69 – 81.

20. Cerrato RA. Freiberg's disease. Foot Ankle Clin. 2011 December; 16 (4): 647 – 658.

21. Maresca G, Adriani E, Falez F, Mariani PP. Arthroscopic treatment of bilateral Freiberg's infraction. Arthroscopy 1996 February; 12 (1): 103 – 108.

22. Palamarchuk HJ, Oehrlein CR. Freiberg's infraction in a collegiate heptathlete. JAM Podiatr Med Assoc. 2000 February; 90(2): 77 – 80.

23. Sproul J, Klaaren H, Mannarino F. Surgical treatment of Freiberg's infraction in athletes. Am J Sports Med. 1993 May – Jun; 21 (3): 381 – 384.

24. Ajis A, Seybold JD, Myerson MS. Osteochondral distal metatarsal allograft reconstruction: A case series and surgical technique. Foot Ankle Int. 2013 August; 34(8): 1158 – 1167.

25. Smith TWD, Stanley D, Rowley DI. Treatment of Freiberg's disease. J Bone Joint Surg (Br). 1991 January; 73-B: 129 – 130.

26. Omer GE Jr. Primary articular osteochondroses. Clin Orthop Relat Res. 1981 July – August; 158: 33 – 40.

27. Lai KA, Shen WJ, Yang CY, Shao CJ, Hgu JT, Lin RM. The use of alendronate to prevent early collapse of the femoral head in patients with non-traumatic osteonecrosis. A randomized clinical study. J Bone Joint Surg Am. 2005 October; 87 (10): 2155 – 2159.

28. Barouk L S. [Weil's metatarsal osteotomy in the treatment of metatarsalgia] (Article in German). Orthopade 1996 August; 25 (4): 338 – 344.

29. Kinnard P, Lirette R. Dorsiflexion osteotomy in Freiberg's disease. Foot Ankle 1989 April; 9(5): 226 – 231.

30. Kinnard P, Lirette R. Freiberg's disease and dorsiflexion osteotomy. J Bone Joint Surg (Br). 1991 September; 73 – B: 864 – 865.

31. Gauthier G, Elbaz R. Freiberg's infraction: a subchondral bone fatigue fracture. A new surgical treatment. Clin Orthop Relat Res. 1979 July – August; 142: 93 – 95.

32. Chao K H, Lee C H, Lin L C. Surgery for symptomatic Freiberg's disease: extra-articular dorsal closing-wedge osteotomy in 13 patients followed for 2 – 4 years. Acta Orthop Scand. 1999 October; 70(5): 483 – 486.

33. Capar B, Katluay E, Műjde S. [Dorsal closing-wedge osteotomy in the treatment of Freiberg's disease] (Article in Turkish). Acta Orthop Traumatol Turc. 2007; 41(2): 136 – 139.

34. Lee SK, Chung M S, Baek G H, Oh J H, Lee Y H, Gong H S. Treatment of Freiberg disease with intra-articular dorsal wedge osteotomy and absorbable pin fixation. Foot Ankle Int. 2007 January; 28 (1): 43 – 48.

35. Pastides PS, El-Sallakh S, Charalambides C. Debridement and microfracture in the treatment of Freiberg's disease. Tech Foot Ankle Surg. 2012 September; 11 (3): 150 – 154.

36. Freiberg AA, Freiberg RA. Core decompression as a novel treatment for early Freiberg's infraction of the second metatarsal head. Orthopedics 1995 December; 18 (12): 1177 – 1178.

37. Dolce M, Osher L, McEneaney P, Prins D. The use of surgical core decompression as treatment for avascular necrosis of the second and third metatarsal heads. Foot 2007 September; 17(3): 162 – 166.

38. Lavery L A, Harkless L B.The inter-positional arthroplasty procedure in treatment of degenerative arthritis of the second metatarsophalangeal joint. J Foot Surg. 1992 November – December; 31(6): 590 – 594.

39. el-Tayby HM. Freiberg's infraction: a new surgical procedure. J Foot Ankle Surg. 1998 January – February; 37 (1): 23 – 27.

40. Thompson FM, Hamilton WG. Problems of the second metatarsophalangeal joint. Orthopedics 1987 January; 10 (1): 83 – 89.

41. Lee EJ, Wong YS.Modification of lesser metatarsophalangeal joint arthroplasty using flexor digitorum longus transfer. Foot Ankle Spec 2008 April; 1 (2): 85 – 87.

42. Zgonis T, Jolly G P, Kanuck D M. Inter-positional free tendon graft for lesser metatarsophalangeal joint arthropathy. J Foot Ankle Surg. 2005 November/December; 44(6): 490 – 492.

43. Özkan Y, Öztürk A, Özdemir R, Aykut S, Yalçin N. Interpositional arthroplasty with extensor digitorum brevis tendon in Freiberg's disease: A new surgical technique. Foot Ankle Int. 2008 May; 29 (5): 488 – 492.

44. Myerson MS. Reconstructive Foot and Ankle Surgery. Philadelphia: Elsevier Saunders, 2005.

45. Myerson MS, Kadakia AR. Reconstructive Foot and Ankle Surgery. 3rd edition. Philadelphia: Elsevier, 2019.

46. Enriquez Castro JA, Guevara Hernandez G, Estevez Diaz G. [Interposition arthroplasty as treatment of osteochondritis of the second metatarsal head. A case report] [Article in Spanish]. Acta Ortop Mex. 2008; 22(4): 259-262.

47. Lui TH. Arthroscopic interpositional arthroplasty for Freiberg's disease. Knee Surg Sports Traumatol Arthroscop. 2007; 15: 555-559.

48. Lui TH. Arthroscopic interpositional arthroplasty of the second metatarsophalangeal joint. Arthrosc Tech. 2016; 5(6): e1333-e1338.

49. Lawton JH. Early surgical intervention for Freiberg's infraction: autogenous epiphysiodesis. J Foot Surg. 1979 Summer; 18 (2): 68 – 71.

50. Hayashi K, Ochi M, Uchio Y, Takao M, Kawasaki K, Yamagami N. A new surgical technique for treating bilateral Freiberg's disease. Arthroscopy 2002 July – August; 18 (6): 660 – 664.

51. De Vries JG, Amiot RA, Cummings P, Sockrider N. Freiberg's infraction of the second metatarsal treated with autologous osteochondral transplantation and external fixation. J Foot Ankle Surg. 2008 November; 47 (6): 565 – 570.

52. Miyamoto W, Takao M, Uchio Y, Kono T, Ochi M. Late-stage Freiberg's disease treated by osteochondral plug transplantation: A case series. Foot Ankle Int. 2008 September; 29 (9): 950 – 955.

53. Hill J, Jimenez AL, Langford J H. Osteochondritis dissecans treated by joint replacement. J Am Podiatry Assoc. 1979 September; 69 (9): 556 – 561.

54. Lawrence BR, Papier M J. Implant arthroplasty of the lesser metatarsophalangeal joint – a modified technique. J Foot Surg. 1980 Spring; 19(1): 16 – 18.

55. Tornier. Futura™ LMP (lesser metatarsal phalangeal (Implant) © 2007.

56. Sgarlato TE. Sutter double-stem silicone implant arthroplasty of the lesser metatarsophalangeal joints. J Foot Surg. 1989 September – October; 28(5): 410 – 413.

57. Tintocallis CA. Nicolle finger joint prosthesis: a preliminary study of total joint replacement for lesser metatarsophalangeal joints. J Foot Surg. 1982 Spring; 21(1): 57 – 60.

58. Miller M L, Lenet MD, Sherman M. Surgical treatment of Freiberg's infraction with the use of total joint replacement arthroplasty. J Foot Surg. 1984 January – February; 23(1): 35 – 40.

59. Scartozzi G, Schram A, Janigian J. Freiberg's infraction of the second metatarsal head with formation of multiple loose bodies. J Foot Surg. 1989 May – June; 28(3): 195 – 199.

60. Sgarlato T. A new implant for the metatarsophalangeal joint. Clin Podiatry 1984 April; 1(1): 69 – 77.

61. Teich LJ, Frankel JP, Lipsman S. Silicone hinge replacement arthroplasty. J Am Podiatry Assoc. 1981 May; 71(5): 266 – 272.

62. Cracchiolo AIII, Kitaoka HB, Leventen EO. Silicone implant arthroplasty for second metatarsophalangeal joint disorders with and without hallux valgus deformities. Foot Ankle Int. 1988 August; 9(1): 10 – 18.

63. Townshend DN, Greiss ME. Total ceramic arthroplasty for painful, destructive disorders of the lesser metatarsophalangeal joints. Foot 2007 June; 17(2): 73 – 75.

64. Shih AT, Quint RE, Armstrong DG, Nixon BP. Treatment of Freiberg's infraction with the titanium hemi-implant. J Am Podiatr Med Assoc. 2004 November – December; 94(6): 590 – 593.

65. Osteomed small bone orthopaedics. EnCompass Metatarsal Resurfacing Implant.

66. Dept of Podiatric Surgery, Ruckhall Lane, Belmont, Hereford HR2 9RP. Patient Information Sheet: Topic-lesser MTP joint degeneration and hammertoe/claw toe.

67. Osteomed Metatarsophalangeal Flexible Stabilizing Pod System. 510(k) Number: K022886, 2002.

68. Beito SB, Lavery L A. Freiberg's disease and dislocation of the second metatarsophalangeal joint: etiology and treatment. Clin Podiatr Med Surg. 1990 October; 7(4): 619 – 631.

69. Matthews AH, Jagodzinski NA, Westwood M, Metcalf JE, Trimble KT. Effectiveness of the Cobb-Stainsby excision arthroplasty. Foot Ankle Surg. 2018; 24(1): 49-53.

70. van Hove RP, Sierevelt IN, van Rooyen BJ, Nolte PA. Titanium – Nitride Coating of Orthopaedic implants: A review of the literature. Bio Med Research International 2015; Article ID 485975; 1 – 9. http://dx.doi.org/10.1155/2015/485975.

71. Charnley J. Tissue reaction to the polytetrafluoroethylene. Lancet 1963; (7322): 1379.

72. Isaac GH, Dowson D, Wroblewski BM. An investigation into the origins of time-dependent variation in penetration rates with Charnley acetabular mps-wear, creep or degradation? Proc Inst Mech Eng (H). 1996; 210: 209 – 16.

73. Willert HG, Semlitsch M. Reactions of the articular capsule to wear products of artificial prostheses. J Biomed Mat Res. 1977; 11: 157 – 164.

74. Joshi AB, Marcovic L, Ilchman T, Murphy J. Polyethylene wear and calcar osteolysis. Am Journal of Orthopaedics Jan 1999; 28 (1): 45 – 48.

75. Rieker C, Oberholzer S, Wyss U, editors. World tribology forum in arthroplasty. Bern: Hans Huber, 2001.

76. Du Plessis TA, Mostert GJ. A dose-setting protocol for the gamma radiation sterilization of medical devices.1996; Based on a paper " Development in the

Regulatory Control of Sterile Medical Supplies in South Africa" presented at the Meeting of the Professional Society for Sterile Supply, Johannesburg, 21 September 1993.

77. Bajaria SH, Bellare A. Deformation, morphology and wear behaviour of polyethylene used in orthopaedic implants. Paper presented at the 23rd Annual Meeting of the Society for biomaterials; 1997 April 30 – May 4; New Orleans.

78. Du Plessis TA, Grobbelaar CJ, Marais F. the improvement of polyethylene prostheses through radiation crosslinking. Radiat Phys Chem. 1977; 9: 647 – 652.

79. Grobelaar CJ, Weber FA, Spirakis A, Du Plessis TA, Capaert G, Cakic JN. Clinical experience with gamma irradiation – crosslinked polyethylene –A 14 – 20 year follow-up report. SA fr J Surg. 1999 (X) 3: 140 – 147.

80. Grobbelaar CJ, Du Plessis TA, Marais F. The radiation improvement of polyethylene prostheses. J Bone Joint Surg (Br). 1978; 60 – B: 370 – 374.

81. De Villiers M. The novel design of three arthroplasties with specific reference to congruence and constraint (thesis). Potchefstroom: Potchefstroom Universiteit vir Christelike Höer Onderwys, 2003.

82. Pappas MJ, Makris, Buechel FF. Titanium-nitride ceramic film against polyethylene. A 48 million cycle wear test. Clin Orthop and Related Research 1995; 317: 64 – 70.

83. Jasty M, Bragdon CR, Leek, Hanson A, Harris WH. Surface damage to cobalt chrome femoral head prosthesis. J Bone Joint Surg (Br). 1994; 76-B: 73 – 77.

84. NIH Guide: What design factors influence wear. Orthopaedic Implant Wear 2001: 170 – 175.

85. Arcângelo J, Guerra-Pinto F, Pinto A, Grenho A, Navarro A, Oliva XM. Peri-prosthetic bone cysts after total ankle replacement. A systematic review and meta-analysis. FAS 2017; https://doi.org/10.1016/j.fas2017.11.002.

86. https//towardsdatascience.com/understanding-the-central-limit-theorem-642473c63ad8. November 2018.

13.0 APPENDICES

Appendix A	:	Ethics approval
Appendix B	:	Acceptance of proposal
Appendix C	:	Permission from the University of the Witwatersrand Anatomy Department
Appendix D	:	Permission from Wolters Kluwer Publishers for reproducing published material
Appendix E	:	Permission from Elsevier Publishers for reproducing published Material
Appendix F	:	Permission from Smith & Nephew for the use of their cadavers and laboratory
Appendix G	:	Permission from Arthrex for the use of their cadavers and laboratory

Appendix A

Human Research Ethics Committee (Medical)

Research Office Secretariat: Senate House Room SH 10005, 10th floor. Tel +27 (0)11-717-1252
Medical School Secretariat: Tobias Building, 2nd Floor. Tel +27 (0)11-717-2700
Private Bag 3, Wits 2050, www.wits.ac.za. Fax +27 (0)11-717-1265

Ref: W-CJ-140813-1 13/08/2014

TO WHOM IT MAY CONCERN:

Waiver: This certifies that the following research does not require clearance from the Human Research Ethics Committee (Medical).

Investigator: Dr N P Saragas

Project title: Lesser metatarsophalangeal joint replacement arthroplasty for degenerative joint disease. Development in vitro of a new design.

Reason: The research will be done on cadavers in academic anatomy departments. In terms of Chapter 8, sections 62-64 of the National Health Act No 61 of 2003 donated bodies and their tissues may be used for, among other purposes health research. Use of such material is subject only to permission from the responsible person in an academic anatomy department; in this case at the Universities of Stellenbosch and the Witwatersrand.

UNIVERSITY OF THE WITWATERSRAND
PROF PE CLEATON - JONES
HREC (MEDICAL)
2014 -08- 13
JOHANNESBURG

Professor Peter Cleaton-Jones

Chair: Human Research Ethics Committee (Medical)

Copy - HREC(Medical) Secretariat: Anisa Keshav, Zanele Ndlovu.

Appendix B

UNIVERSITY OF THE WITWATERSRAND, JOHANNESBURG

Private Bag 3 Wits, 2050
Fax: 027117172119
Tel: 02711 7172076

Reference: Ms Thokozile Nhlapo
E-mail: thokozile.nhlapo@wits.ac.za

Dr NP Saragas
P O Box 1153
Highlands North
2037
South Africa

30 April 2015
Person No: 7709182
PAG

Dear Dr Saragas

Doctor of Philosophy: Approval of Title

We have pleasure in advising that your proposal entitled *Lesser metatarsophalangeal joint replacement arthroplasty for degenerative joint disease* has been approved. Please note that any amendments to this title have to be endorsed by the Faculty's higher degrees committee and formally approved.

Yours sincerely

Mrs Sandra Benn
Faculty Registrar
Faculty of Health Sciences

Appendix C

Eva & Nick Saragas

From: Brendon Billings <Brendon.Billings@wits.ac.za>
Sent: 08 May 2014 01:41 PM
To: saragas@global.co.za
Subject: Dart application

Hi Dr Saragas

Your application to conduct research within the Dart Collection has been approved. Please let me know when you would have some time to have a meeting to discuss? Also to show you what material we do have. Thanx and Regards.

Brendon Billings , PhD candidate
Lecturer (Morphological Anatomy), Curator (Raymond Dart Collection of Human skeletons) | School of Anatomical Sciences | University of the Witwatersrand | Johannesburg, South Africa
Tel: (+27)11 717 2057 | Fax: (+27)11 717 2422

This communication is intended for the addressee only. It is confidential. If you have received this communication in error, please notify us immediately and destroy the original message. You may not copy or disseminate this communication without the permission of the University. Only authorised signatories are competent to enter into agreements on behalf of the University and recipients are thus advised that the content of this message may not be legally binding on the University and may contain the personal views and opinions of the author, which are not necessarily the views and opinions of The University of the Witwatersrand, Johannesburg. All agreements between the University and outsiders are subject to South African Law unless the University agrees in writing to the contrary.

1

Appendix D

Eva & Nick Saragas

From: Wolters Kluwer Rights and Permissions <permissions@lww.com>
Sent: Friday, May 16, 2014 5:46 PM
To: saragas@global.co.za
Subject: S K Sarrafian Books Permissions Request [Incident: 140511-000054]

Recently you requested personal assistance from our on-line support center. Below is a summary of your request and our response.

If you are receiving this in response to a request you made, a summary is below. If you have not made a request, the following is a communication on behalf of your LWW Sales Representative.

Thank you for allowing us to be of service to you.

To access your question from our support site, click here.

Subject
S K Sarrafian Books Permissions Request

Discussion Thread
Response Via Email (Chandreyi Das) 05/16/2014 11:46 AM
Dear Dr. Nick Saragas,

We are pleased to grant permission for the reproduction of the following:

Sarrafian: Anatomy of the Foot and Ankle, 2nd edition
Spec. Material: Thesis/Disseration
Material Used: Fig 10-89 page 534 (Inclination angles of the metatarsal shafts 1-V relative to the ground)
Fig 10-136 page 558 (The truss mechanism of the foot)
Fig 10-169 page 581 (Axes of the push off)
Perm. Request No: 140511-000054

1

Appendix E

Eva & Nick Saragas

From: Jones, Jennifer (ELS-OXF) <J.Jones@elsevier.com>
Sent: Tuesday, May 20, 2014 1:46 PM
To: saragas@global.co.za
Subject: RE: Obtain Permission - Book request

ELSEVIER

Dear Nikiforos Saragas
We hereby grant you permission to reprint the material detailed below at no charge **in your thesis** subject to the following conditions:

1. If any part of the material to be used (for example, figures) has appeared in our publication with credit or acknowledgement to another source, permission must also be sought from that source. If such permission is not obtained then that material may not be included in your publication/copies.

2. Suitable acknowledgment to the source must be made, either as a footnote or in a reference list at the end of your publication, as follows:

   "This article was published in Publication title, Vol number, Author(s), Title of article, Page Nos, Copyright Elsevier (or appropriate Society name) (Year)."

3. Your thesis may be submitted to your institution in either print or electronic form.

4. Reproduction of this material is confined to the purpose for which permission is hereby given.

5. This permission is granted for non-exclusive world **English** rights only. For other languages please reapply separately for each one required. Permission excludes use in an electronic form other than submission. Should you have a specific electronic project in mind please reapply for permission

6. Should your thesis be published commercially, please reapply for permission.

Appendix F

Smith & Nephew (Pty) Ltd.
30 The Boulevard
Westend Office Park, Westville

Postal Address:
P O Box 92, PINETOWN, 3600
Republic of South Africa

T + 27 31 242 8111
F + 27 31 242 8251 (Endo/Recon)
www.smith-nephew.com/south-africa

smith&nephew

6 October 2016

To whom it may concern

This letter serves to confirm that during the course of 2016, Professor Saragas was contracted to Smith & Nephew as a member of our faculty to chair a number of professional education events.
These training courses are in the form of hands on practical workshops that include presentations, discussions, case studies and hands on practical work on human cadavers, to enable delegates to improve their arthroscopic surgical techniques and to use Smith & Nephew products correctly and safely.

Prof Saragas work on the specimens includes surgical technique demonstrations and the study of relevant anatomy.

Furthermore he was given permission to work on the fresh human cadaver feet for his own research purposes

Should you require any further information, please do not hesitate to contact me.

Yours Sincerely

Andy Zoepke
Professional Education Manager

Registration No. 2002/012756/07

Directors: V Ponsamy (Managing), R Bianchi, R.L. Buthelezi, J.E Horn Dr. S.A. Mhlambi, D.K. Roberts, M.R. Woods

Appendix G

ARTHROMEDIX
a sa biomedical company

10 October 2016

To Whom It May Concern

Subject: Professor N P Saragas ArthroLab attendance, Cape Town 28 May 2016

This letter serves to confirm that Professor N P Saragas was given permission to work on fresh cadavers in the wet lab at the ArthroLab Sport Science Institute in Newlands Cape Town, for research purposes.

Thank You
Kind Regards

Rowan Tyler
National Product Manager - DEX

rtyler@arthromedix.co.za
Cell: +27 83 232 3482
Tel: +27 31 266 6525

www.sabiomedical.co.za | www.arthrex.com

"Providing distinctive orthopaedic devices and solutions for optimal patient outcomes."