

https://dspace.org/

Brand equity as a predictor of repurchase intention of male branded cosmetic products in South Africa

Pather, Praveshni

2016

http://hdl.handle.net/10539/21766

Pather, Praveshni (2016) Brand equity as a predictor of repurchase intention of male branded cosmetic products in South Africa, University of the Witwatersrand, <http://hdl.handle.net/10539/21766>

Downloaded from a DSpace repository. https://dspace.org/



Brand Equity as a Predictor of Repurchase Intention of Male Branded Cosmetic Products in South Africa

A research report submitted to the Faculty of Commerce, Law and Management, University of the Witwatersrand, in partial fulfilment of the requirements for the degree of Master of Management in Strategic Marketing

Praveshni Pather 0201644 R

Dedication

September 2015

I dedicate this dissertation to my beloved brother, the late Kovilan Pather, who has been an inspiration to me in whatever I do.

ABSTRACT

The cosmetic industry over the years has proven to be one of the fastest growing and most profitable industries globally. In the male cosmetic industry, male grooming, metrosexual and dapper trends have rapidly expanded across global communities and, in recent years, have become a leading trend amongst South African men. These emerging trends subsequently shaped the way businesses and companies expanded product lines and developed marketing strategies. It is imperative that we understand what marketing capabilities companies require to stay abreast of local trends in order to gain a market share and strong brand presence in these expanding categories.

Companies invest significant financial resources on marketing in order to have a compelling value proposition against competitors. Understanding the customer and what aspects of brand equity resonate with customers would ensure that companies have a streamlined customer centric marketing plan that meets the customers' needs and addresses the accurate emotional touch points to capture the customer and encourage resilient repurchase intention.

Four hypotheses are posited and in order to empirically test them a sample data set of 208 was collected in South Africa. The results indicate that brand loyalty, brand awareness, perceived quality and brand association positively influences repurchase intention of male branded cosmetic products in South Africa in a significant way. Drawing from the study's findings, managerial implications are discussed and limitations and future research directions are suggested.

DECLARATION

I, Praveshni Pather, declare that this research report is my own work except as indicated in the references and acknowledgements. It is submitted in partial fulfilment of the requirements for the degree of Master of Management in Strategic Marketing in the University of the Witwatersrand, Johannesburg. It has not been submitted before for any degree or examination in this or any other University.

Praveshni Pather

Signed at…….

On the……day of……20……..

ACKNOWLEDGEMENTS

I wish to express my sincere gratitude to:

The almighty God, for granting me the strength, courage and tenacity to complete this dissertation.

My supervisor, Professor Richard Chinomona. My sincere thanks, gratitude and a special tribute to his patience, encouragement, vast knowledge, invaluable assistance and guidance throughout this study. The Wits Business School for affording me the opportunity to study at its institution, in the completion of my Masters.

To my parents for their interest, encouragement and love that they have so willingly expressed during my studies. A special mention to my father Ram for installing the value of education in me and for being a remarkable role model and to my mother Prissy, who is the epitome of a modern successful woman who I strive to emulate through knowledge and perseverance.

To my beloved husband, Roheet for his love, patience, encouragement, and understanding whilst I was immersed in my studying for many, many hours. And mostly, for his empowerment in allowing me to fulfil my dreams.

Lastly, to my friends and relatives for the unfailing support and understanding during this time.

“A product is something that is made in a factory; a brand is something that is bought by a customer. A product can be copied by a competitor; a brand is unique. A product can be quickly outdated; a successful brand is timeless.” - **Stephen King, WPP Group London**

TABLE OF CONTENTS

DEDICATION ..... **I**

ABSTRACT ..... **II**

DECLARATION ..... **III**

ACKNOWLEDGEMENTS ..... **IV**

LIST OF TABLES ..... **X**

LIST OF FIGURES ..... **XI**

1 INTRODUCTION **1**

1.1 PURPOSE OF THE STUDY 1

1.2 CONTEXT OF THE STUDY 1

1.3 PROBLEM STATEMENT 3

1.3.1 Main problem *4*

1.3.2 Sub-problem 1 ..... *4*

1.3.3 Sub-problem 2 ..... *4*

1.4 SIGNIFICANCE OF THE STUDY 5

1.5 DELIMITATIONS OF THE STUDY 5

1.6 DEFINITION OF TERMS 6

1.7 ASSUMPTIONS 6

2 LITERATURE REVIEW **7**

2.1 INTRODUCTION 7

2.2 THE HISTORY OF THE COSMETIC INDUSTRY 7

2.3 BRANDS 9

2.3.1 Branding *9*

2.4 BRAND EQUITY 12

2.5 BRAND AWARENESS 14

2.5.1 Brand recognition *15*

2.5.2 Brand recall *16*

2.5.3 Achieving brand awareness *17*

2.6 BRAND ASSOCIATION 18

2.6.1 Attributes *19*

2.6.2 Benefits *20*

2.6.3 Attitudes *20*

2.6.4 Functionality of brand association *21*

2.7 Brand Loyalty 22
2.8 Perceived quality 24
2.9 Repurchase intention 26
2.10 Conceptual model and hypothesis development 27
2.10.1 Brand awareness and repurchase intention 28
2.10.2 Brand association and repurchase intention 29
2.10.3 Brand loyalty and repurchase intention 29
2.10.4 Perceived Quality and repurchase intention 30
2.11 Conclusion of Literature Review 30

3 RESEARCH METHODOLOGY 31

3.1 Introduction 31
3.2 Research philosophy 32
3.3 Interpretivism 33
3.4 Positivism 33
3.5 Research Methodology & Design 34
3.6 Quantitative research 35
3.7 Sampling design 36
3.7.1 Target Population 36
3.7.2 Sampling frame 37
3.7.3 Sampling method 37
3.7.4 Sample size 39
3.8 Questionnaire design 40
3.9 Data collection technique 41
3.10 Data analysis 43
3.10.1 Structural Equation Modelling 43
3.10.2 Data analysis approach 45
3.10.3 Data coding using Excel spreadsheet 45
3.10.4 Descriptive analysis using Statistical Package for the Social Sciences (SPSS) 46
3.10.5 Reliability and Validity tests of measurement scales using SPSS 46
3.10.6 Confirmatory Factor Analysis (CFA) 47
3.10.7 Reliability and Validity tests in CFA 48
3.10.8 Path Modelling 48
3.11 Summary 49
3.12 Limitations of the study 50

4 RESULTS AND FINDINGS 51

4.1 Introduction 51
4.2 Descriptive Results 51

4.2.1 Gender and race *53*
4.2.2 Age *54*
4.2.3 Male brand and brand choice experience *54*
4.2.4 Money spent on brands and cosmetic group *55*
4.3 RELIABILITY 55
4.4 CRONBACH'S ALPHA TEST 57
4.5 COMPOSITE RELIABILITY (CR) 57
4.6 AVERAGE VALUE EXTRACTED (AVE) 58
4.7 VALIDITY 58
4.7.1 Convergent Validity *58*
4.7.2 Discriminant Validity *59*
4.7.3 Confirmatory Factor Analysis *60*
4.7.4 Model Fit Assessment *61*
4.7.5 Chi-square (χ^2 /DF) *62*
4.7.6 Normed Fit Index (NFI) *63*
4.7.7 Tucker-Lewis Index (Ferrell & Hartline) *63*
4.7.8 Incremental Fit Index (IFI) *63*
4.7.9 Comparative Fit Index (CFI) *63*
4.7.10 Root Mean Square Error of Approximation (RMSEA) *63*
4.8 HYPOTHESIS TESTING 64
4.8.1 Discussion of Hypotheses Results *65*

5 CONCLUSIONS AND RECOMMENDATIONS 67

5.1 INTRODUCTION 67
5.2 OVERVIEW OF THE FINDINGS 67
5.2.1 Brand Awareness (BA) and Re-purchase Intention (RI). *67*
5.2.2 Brand Association (BA) and Re-purchase Intention (RI). *67*
5.2.3 Brand loyalty (BL) and Re-purchase Intention (RI). *68*
5.2.4 Perceived quality (PQ) and Re-purchase Intention (RI). *68*
5.3 IMPLICATIONS OF THE STUDY 68
5.3.1 Brand Awareness (BA) and Re-purchase Intention (RI). *68*
5.3.2 Brand Association (BA) and Re-purchase Intention (RI). *68*
5.3.3 Brand loyalty (BL) and Re-purchase Intention (RI). *69*
5.3.4 Perceived quality (PQ) and Re-purchase Intention (RI). *69*
5.3.5 Overall implication of the study *69*
5.4 CONCLUSION 70
5.5 CONTRIBUTIONS AND RECOMMENDATIONS 70
5.6 LIMITATIONS AND FUTURE RESEARCH 71

APPENDIX A **72**

REFERENCES **81**

LIST OF TABLES

Table 3.1: Profile of respondents.....40

Table 4.1: Sample Demographic Profile.....52

Table 4.2: Scale Accuracy Analysis Statistics.....55

Table 4.3: Correlation between constructs 59

Table 4.4: Model Fit Results - Structural Model 62

Table 4.5: Hypothesis Relationships 64

LIST OF FIGURES

Figure 2.1: Kapferer's Prism on Identity adopted from Randall (2000).....10

Figure 2.2: A Conceptual Model of Brand Equity.....12

Figure 2.3: A Conceptual Model of Brand Equity.....28

Figure 3.1: A diagrammatic representation of the overall data analysis approach 49

Figure 4.1: Confirmatory Factor Analysis Model 61

Figure 4.2: Path Model.....65

1 INTRODUCTION

1.1 Purpose of the study

The purpose of this research is to investigate the impact of brand awareness, brand association, brand loyalty and perceived quality, on the repurchase intentions of branded cosmetics among males in South Africa.

1.2 Context of the study

The increasing globalisation drivers have seen many adaptations into the business world which subsequently changed company's main concerns and directives of marketing. According to Solberg (1997, p. 27), globalisation is defined as "as a process whereby large firms seek market shares in international markets by building structural entry barriers and by reducing the effect of international barriers," whilst the worldwide economic crisis has brought new challenges which require modification of international marketing strategies. Due to focusing on market segments with cumulatively high global sales, increased focus will draw attention to the luxury cosmetic market which has been seen to grow during financial adversity in western economies (Kapferer, 2012). Berthon, Pitt, Parent, and Berthon (2009) suggested that these luxury segments are the most lucrative and rapidly growing brand segments, although the segment is poorly understood and under examined.

According to Perry (2010), the global cosmetic market was fast approaching 170 billion dollars by 2010. Gloria (2008) indicated that global sales of organic cosmetics bordered on 7 billion dollars, with an expectation to exceed 10 billion dollars by the close of the decade.

South Africa is an emerging market, dominated by an increase in the middle-income group of earners, with economic, political, social and technological environments changing at a rapid pace, according to the South African Overview report. As these changes unfold, there is a disproportionate relationship between the roles of males and females in society and men are increasingly consuming products that were formerly reserved for female consumption (McNeill & Douglas, 2011). This phenomenon has led to the cosmetic

industry changing to accommodate the demand for male grooming products which could be attributed to the global trend of overall wellness, the appearance of looking after one's self (Thompson & Hirschman, 1995) and the increase in style magazines targeted at males (Byrnes, 2006).

The highly competitive South African cosmetic men's grooming segment has seen a tremendous spike in overall sales, largely influenced by new product launches occurring during 2013 (Euro monitor International, 2014). In addition, South African men are becoming increasingly metrosexual and conscious of their appearances which have encouraged the development of unique male related products. Further, the findings show that marketing is utilising social media, celebrities and sportsmen to increase the propensity of product purchasing, thereby stimulating manufacturers to respond vigorously to marketing and producing these segment-specific products to gain their market share in this evolving market. According to A C Nielsen, in the early 1980's, men's toiletries had little or no inter-connection by brand or usage. The market has however, become more sophisticated and segmented into definite categories; fragrances and body sprays, shaving preparations, hair care, shower gels and skin care products consumed by men (Sturrock & Pioch, 1998). This segment comprises both low end and high end international brands.

The initial emergence of brands' principal use was used to indicate the source of a product, producer of the good, as well as over time, a quality indicator (Farquhar, 1989). Now, brands represent more than a mere heritage of the essential offering. Brands are focus tools that add value to the company to which they belong. In the business environment, they are a reflection of the value they offer and marketing has become a tool for transferring these values to consumers. Zayer and Neier (2011) advocate that males form a relationship with brands when consuming fashion and grooming products. Keller (2003a) confirms the aforementioned by indicating the uniqueness of the characteristics associated with a brand influences the chance of it being repeatedly consumed. The researcher postulates that the management of brands in the cosmetic industry targeting males is a key factor. According to Keller (2001) a brand has a sign, symbol or a combination of these and is unique to the brand used; it is a form of identification of one product against the next.

Aaker (1992, p. 52) states that brand equity is "a set of brand assets and liabilities linked to a brand, its name and symbol that add to or subtract from the value provided by a product or service to a firm/or to that firm's customers" whereas Keller, Parameswaran, and Jacob (2011) consider brand equity from a consumer perspective and deliver it as the how consumers will respond to brand marketing. Based on the distinction of brand knowledge. This research report adopts Aaker's model on brand equity that comprises brand awareness, brand association, brand loyalty and perceived quality.

According to Aaker (1992), the brand equity model lists three ways of how brand assets create value for the customer. Firstly, brand equity can help a customer understand, process, collect, and retrieve large amounts of information about brands and their benefits. Secondly, it can influence the consumers' purchase decision based on confidence; a customer is usually more comfortable with a brand he has used or a brand with high quality. Finally, perceived quality provides significance or value to the customer by enhancing the customer's satisfaction. The model has been adapted to study the relationship between brand equity and repurchase intentions of males within the South African cosmetic industry and the relative importance of each construct in the repurchase decision.

This study commences by reviewing the current literature on brand equity to determine the research hypothesis. Secondly the research methodology is presented and analyses discussed. Thereafter results are stated, followed by the discussion and conclusion to the research question, lastly, limitations and future research recommendations are proposed.

1.3 Problem statement

A significant amount of research has been conducted around female's repurchase intentions within the cosmetic industry (Macdonald & Sharp, 2000; Ulfat, Muzaffar, & Shoaib, 2014). Furthermore, this has always been a key interest in the cosmetic industry, but with particular focus in females (Guthrie & Hye-Shin, 2009; Hanzaee & Andervazh, 2012; Khraim, 2011). Very few, if any, studies in South Africa have investigated the relationship between the components of brand equity and the influence it may have on the repurchase intention amongst males. Nielsen reports have shown that growing the male

grooming industry contributes a significant amount to the overall industry. Understanding the influential driving factors of males' repurchase intentions within the cosmetic industry provides a justification for this study.

The intended outcome out of this study is to explore the relationship between brand awareness, brand association, brand loyalty, perceived quality and repurchase intention of males within the cosmetic industry with a view to understanding which of the components drive the decisions more and how these components drive the decision. In his work, Guo (2011) suggests that European men, in particular, Finnish men, reacted slowly towards the global trend of heterosexuality and had low involvement in the purchase decisions for grooming products. It would be valuable for the researcher to identify if South African men have taken to the global trend more aggressively and if the purchase decision is a high involvement decision as this would entice marketers to develop their awareness through employing strong branding and strategic tools.

1.3.1 Main problem

There is a lack of understanding of the relationship and influences of brand equity on repurchase intention of South African males in the cosmetic industry.

1.3.2 Sub-problem 1

To determine the relationship between brand awareness, brand association, brand loyalty and perceived quality on the repurchase intention of South African males in the cosmetic industry.

1.3.3 Sub-problem 2

To investigate which of the components hold the strongest relationship with the repurchase intention of South African males in the cosmetic industry and the mechanism of how this occurs.

1.4 Significance of the study

Much attention has been drawn to the concept of brand equity since the 1990s (Aaker & Biel, 1993; Keller, 1993b; Netemeyer et al., 2004). The multiplicity of views by Aaker and Biel (1993), Keller et al (2011) and Srivastava and Shocker (1991) all generalise brand equity to be the effects of marketing that are all unique and attributable to the brand.

Considering the prominence of brand equity in academic literature, the researcher believes it is imperative to understand its components, based on Aaker's model, and the relationship these components hold with the repurchase intention of South African males consuming cosmetic products.

This study further determines the association brand awareness, brand association, brand loyalty and perceived quality in relation to repurchase intention in South African male cosmetic industry. Further, the study aims to provide a scholarly view on the relationships between the four constructs, and how they relate to repurchase intention.

It is hypothesised that the findings of this study add value to the field of marketing within the South African male cosmetic industry by having a focused approach and understanding of repurchase intentions. This facilitates more accurate marketing budgeting and strategies being employed.

In conclusion, the findings assist in bridging the gap of the limited literature in this field, in relation to better understanding males, their motivations to purchase male grooming products and how males interact with brands (Audrey Blanchin, Cyrielle Chareyron, & Quentin Levert, 2007; Souiden & Diagne, 2009; Zayer & Neier, 2011).

1.5 Delimitations of the study

This study focused on the overall male cosmetic grooming industry, which includes facial creams, men's deodorants, shaving applications and men's shower gels and excludes any or all unisex and female products. The cohort for this research were part of a convenient sampling group across four organisations. However, the cohort was randomly selected.

1.6 Definition of terms

- **Brand awareness**

Brand awareness is the ability to identify the brand under varying conditions, reflected by their brand recognition or recall performance (Kotler, 2000)

- **Brand association**

Brand associations may refer to persons, a "use context", a life style or a personality. All of these may change the use experience and help process and retrieve information in a specific manner (Aaker, 1992)

- **Brand loyalty**

The definition is expressed as a response expressed over time, with respect to one or more alternative brands out of a set of such brands (Jacoby & Kyner, 1973).

- **Perceived Value**

The value promised by the brand value proposition and the manner in which the customer selects, organises and interprets the proposition in order to create a view about the brand (Kotler, 2006).

1.7 Assumptions

There are various assumptions that are important in establishing a baseline for this study, and they are as follows:

- It can be assumed the feedback of the sample of male respondents is representative of South African male population
- It is assumed that the economic downturn has no limited males consumer buying patterns
- Male respondents are using male grooming products
- The respondents are biased in their responses considering that they are answering question about brands that they use.

2 LITERATURE REVIEW

2.1 Introduction

This section discusses the key areas of significance to the study. First, the history of the cosmetic industry is presented. Second, an empirical review of brand equity brand awareness, brand association, brand loyalty and perceived quality which are the variables under study is presented as a core of this section. The theories that the study are based on are discussed under purchase intention as the outcome variable. Then, in concluding, the key learnings acquired in the literature reviewed are summarised.

The primary objective for this section is to discuss the relationship between brand equity and repurchase intentions within the cosmetic industry. In addition, this section discusses the correlation between brand awareness, brand association, brand loyalty perceived quality and repurchase intentions and which of these hold the strongest relationship.

2.2 The History of the Cosmetic industry

Reynolds (2003) infers that the history of cosmetics is concomitant to the history of civilisation, with the origin of cosmetics dating back thousands of years ago. According to Pons-Guiraud and Vigan (2004), history indicates that both males and females sought methods to improve their appearances and, historically, their consumption of cosmetics has crossed continents and is seen in various cultures. Further, it is shown that beauty, hygiene and body care was a cultural norm for the ancient Egyptians as early as 1300 B.C.E. Remler (2010) indicated that traditionally, nobles of society took daily baths followed by the application of cosmetic products which indicated a sign of wealth during this time. Initially it was earmarked " to priests and funeral rites, it gradually became generalised and 2000 years before Christ all Egyptian men, women and even children, whatever their social standing used make-up to adorn" for appearance and protection (Pons-Guiraud & Vigan, 2004 p. 6). Make-up included the use of lotions, fragrances, sun screen applications and anti-aging products (Bunson, 2002). Kharim (2011) suggest that cosmetics have appeared mainly in the upper classes of society, from the middle age

within the western world and amongst several other cultures, like the Native Americans and African Tribes. Further, the author indicates that the oldest and largest cosmetic firm, founded as the French Harmless Hair Colouring Company by Eugene Schueller in 1909, is L'Oreal. In the 1910's, the United States cosmetic market was developed by Elizabeth Arden, Max Factor and Helena Rubinstein and was later joined by Revlon and Estee Lauder.

Cosmetics in the modern era, were two distinct segments, being male and female. Cosmetology within the female market segment has been linked to beauty, wellness and pleasure. In recent decades, there has been a shift in attitudes towards acceptance of male grooming and wellness products. Beauty and hygiene products for the male industry had been significantly overlooked by major cosmetic brands. The male beauty segments lags in size compared to the female beauty segment. As cited in Tungate (2008), Data Monitor predicted that sales of men's grooming industry would grow from $3.61 billion in 2003 to nearly $40 billion in 2010, compared to the female market that had already reached the $100 billion mark; this segment referred was referred to as a niche market. Dalgic (2006) defines a niche market as being a sub-category of the total target market, where a specific need for a product or service is being satisfied. It is generally not provided by the majority players in the market. L'Oréal is regarded as an innovator and pioneer in this niche segment, with the launch of Biotherm Homme in 1985 to accommodate the male cosmetic market. L'Oréal has dominated this sector for over 20 years. Blachin, Chareyron and Levert (2007) reported that the real transformation of the male cosmetic market was initiated by the entry of cosmetic giants, Vichy in 2001 and Clarins in 2002. Following this transformation, other brands such as Nivéa for Men, Klorane, Vichy, Nickel, Phytomer, Clarins Men, and L'Oréal penetrated the men's cosmetic market.

The international transformation of this once niche segment reflects a similar representation in this now emerging men's cosmetic segment in South Africa. This segment is dominated by both local and international brands.

2.3 Brands

Farquhar (1989) indicates that brands first appeared in the sixth century where they were used by whiskey distillers to mark or brand their barrels when being shipped. Keller, Aperia and Georgson (2008, p. 39) further stated that the origin of the word 'Brand' was derived from the Old Norse word, "Brand" which means "to burn", as was and still is, the method utilised by livestock owners to mark their animals for identification purposes, as well as to differentiate them from those of competitors. The evolution of brands continued in the eighteenth century, when manufactures' names were substituted with the names and symbols or origin, famous people and animals which endorsed the relationship of brand names to the product (Farquhar, 1989). Keller (2003a) suggests that the generation of a new name, logo or symbol for a product relates to the creation of a brand, eliciting awareness and presence in the market place. The American Marketing Association advocates that a brand is a sign, symbol, design, term name or a collective blend which differentiates goods and services from competition (Kotler, 2000). Upshaw (1995) postulates that a brand is intermittently regarded as a distinct value proposition, or a promise of various benefits, which should be conveyed uninterruptedly through all customer interactions over time. Kapferer (2008) indicates that consumers' familiarity, derived from the value of a consistent brand, inevitably drives growing profits and business value in the long term. Therefore, considering the aggressively growing global and South African cosmetic industry, the success of a brand and its consumption, which relates to company profitability, is influenced by branding.

2.3.1 Branding

Joachimsthaler and Aaker (2000) suggest that there has been a transformation of branding and of consumers with the progression of time. Hislop (2001) defines branding as the method of constructing a relationship between an item or sentiment and a product or organisation. Further, branding is seen to create a link and association with consumers with the objective of influencing loyalty and forming a distinction from competitors. According to Joachimsthaler and Aaker (2000), branding expenditures were commonly sacrificed with company budget reductions, as it was viewed as an operational exercise. Currently, in view of the aggressively growing competition in the business world and

particularly in the cosmetic industry, branding represents a key strategy. Joachimsthaler and Aaker (2000) indicate that a brand is regarded as the most important asset for an organisation and is not merely an operational function. Within the cosmetic industry, this is the foundation on which enduring relationships with a long term emphasis, are built, utilising the focus on the modern branding principle which depends on creating loyalty to a brand.

Branding encompasses both internal and external branding, and, according to Davies and Chun (2002), internal branding is the acceptance by employees to appreciate and mirror the brand of the company, whereas external branding refers to how companies position their brands in the mind of the consumer, to ensure that the brand is perceived as professional and responsive to customers' desires. In relation to the cosmetic industry, both the aforementioned play a fundamental role in the marketing of cosmetic products.

Keller et al., (2008) emphasise that brand is king and branding influence all business segments and not merely consumers. It has been proposed that brands have various diverse facets (Randall, 2000). This can identified by applying the Kapferer's prism of identity model as illustrated bellow:

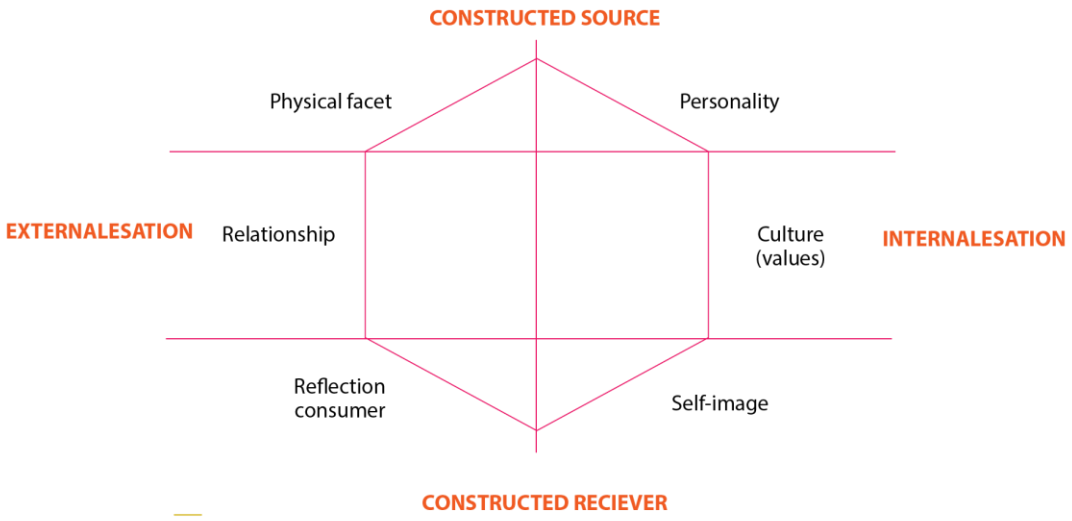

Figure 2.1: Kapferer's Prism on Identity adopted from Randall (2000)

When applying Kapferer's prism of identity model, physique is the basis of the brand, personality is what kind of person it would be if it were human, culture symbolises the

origin and value the brand stands for, relationship is the indication that people purchase the product repeatedly and form a relationship, self-image is the way the consumer sees his/her self and, lastly, reflection refers to the type of person the user would like to become (Randall, 2000).

In relation to the cosmetic industry, all of the above facets interact with each other concomitantly and should be accurately communicated to consumers. This will facilitate the consumer repurchase decision. The aforementioned further illustrates that brands are a central asset to a frim and that measuring their strategic value is of fundamental importance. In addition, Farquhar (1989) indicates that equity is an indication of a brands' overall value. Christodoulides and de Chernatony (2010) suggest that brand equity is possibly the most fundamental marketing theory in both research and practice. Further, academics aspire to comprehend how brand equity is measured and how it influences a company. On the other hand, marketing practitioners seek to understand the decision making process of consumers' various brand purchases with a view to improving their brand equity. Two conceptualisation models of brand equity have been proposed by Aaker (1991a) and Keller (1993b); both these models have influenced the constructs of various scales to measure brand equity and are aimed at determining what consumers perceive. Aaker's model of brand equity is one of most employed conceptual models of brand equity and is presented below:

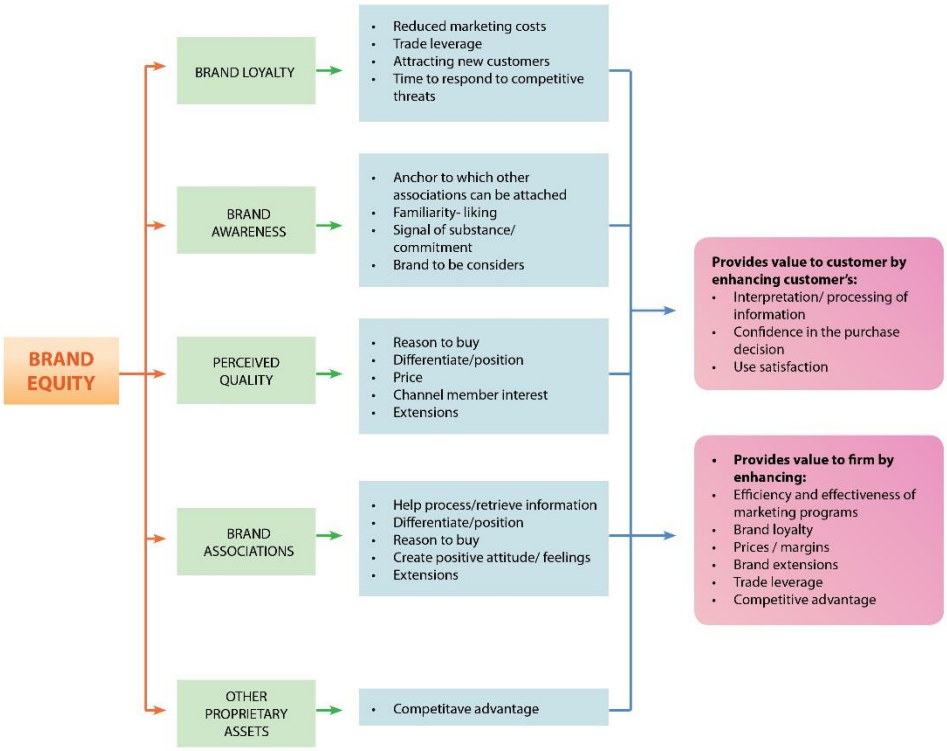

Figure 2.2: A Conceptual Model of Brand Equity

2.4 Brand Equity

Brand equity has been identified as one of the most fundamental tools of mainstream marketing for both academia and practice, since the late eighties (Aaker, 1991a; Ailawadi, Lehmann, & Neslin, 2003; Erdem, Swait, & Valenzuela, 2006; Farquhar, 1989; Keller, 1993b). Brand equity, according to Pride & Ferrell (2003, p. 299) is defined as "the marketing and financial value associated with a brand's strength in the market, including actual proprietary brand assets, brand name awareness, brand loyalty, perceived brand quality, and brand associations." Although brand equity has been rigorously researched, there is no clear agreement in defining or quantifying associated components of brand equity (Hilgenkamp & Shanteau, 2010). However, according to Lassar, Mittal, and Sharma, (1995), there are three distinctive view points; financial perspective, customer base perspective and a combined perspective:

The financial perspective indicates that favourable financial performances, together with shareholder value creation, are constructive attributes of brand equity. In addition, Simon and Sullivan (1993) indicate financial markets include the value of a brand as an asset when on the balance sheet when evaluating a company value. Further, the authors state that the financial perspective takes into account the financial market value-based technique when determining a firm's brand equity. This measurement is undermined due to the fact that the brand merely reflects the intangible asset value for the firm which mitigates other intangible assets, such as human capital. It also only measures equity for corporate brands and not as product/brand extensions. Aaker and Jacobson (1994) confirm that strong brands positively influence return on investment, and further conclude brand equity is positively associated with favourable accounting profits (Aaker & Jacobson, 2001).

The customer base perspective according Srivastava and Shocker (1991) incorporates binary dimensional theories of brand value and brand strength. Strong brands denote brand strength within the market place which enhances sustainable and resilient competitive advantages (Farquhar, 1989). Brand value, according to Aaker (1991a), indicates that by attaching a set of brand assets and liabilities to the brand, the name or the symbol, it enriches the brand value. Such enrichment to the brand can add or deduct from the value of the product or service to the customer. For any brand to become influential and commanding in the market, it need to acquire a strong brand equity which will bolster brand awareness, brand loyalty, brand association and a strong perceived quality (Kotler, 2000). Furthermore, brand equity contributes to generating a positiveness in the customer's assessment and decision making of a brand (Masayavanij, 2007).

Lastly, *combined perspective* integrates the financial and customer base perspectives. This view includes the inadequacies when only one perspective is adopted. Hollis, Farr, and Dyson (1996) suggest that an economically associated value can be attributed to customer base equity of brand images, brand strength and brand value. Further, Motameni and Shahrokhi (1998) proposed that universal brand equity assessments are made up of brand equity from both marketing and financial perspectives.

This research is based on the customer perspective, as customers draw on numerous signals to authenticate brands (Napoli, Dickinson, Beverland, & Farrelly, 2014). This decision is due to the financial value of brand equity being seen ultimately as an outcome

of a consumer's response to a brand name. In addition, this is an influential factor when growing the profits of the brand as it is reliant on market perceptions (Christodoulides & De Chernatony, 2010). Therefore, this research investigated how repurchase intentions are influenced by the individual choice behaviours of consumers and the strength of an offering in the market place which are determinants of brand equity. However, activities, including market activities, are exposed to peripheral stimuli such as prices, and other market contenders which are over and above the brand.

For the purpose of this research discussing the components of brand equity proposed by Aaker (1991a) namely; brand awareness, brand association, brand loyalty and perceived quality would provide greater insight into understanding whether there is relationship between the components and repurchase intention within the South African male cosmetic industry.

2.5 Brand awareness

Brand awareness is the capacity to associate a brand under various conditions with its importance, and is seen as increasing the propensity of the brand being part of, or selected from, a consideration set. This inevitably reinforces brand association and brand image (Hur, Ahn, & Kim, 2011). According to Aaker (1991a), brand awareness measures the ability of the prospective customer to recognise or recall a brand when faced with a purchase decision. Researchers, namely Aaker and McLoughlin (2010), postulate that the key role of brand awareness influencing consumer purchase decisions occurs twice: first, brand awareness delivers a sense of acquaintance which motivates purchase decisions, second, brand awareness is a collective set of indictors of prominence, assurance, characteristics and other sub-elements whereas Percy and Rossiter (1992) suggest that the primary determining factor is to differentiate that brand knowledge from brand awareness.

Further, the authors indicate that the brand prominence is associated with the consumer's capability of distinguishing the brand under diverse settings. This merely illustrates the dominance of a brand's identity. Keller (1993b) confirms previous studies that suggest that increasing brand prominence encounters directly correlate to brand awareness. Moreover, brand awareness plays an important role in the consumer decision making process as it

emphasises the brand when entering the consideration set (Macdonald & Sharp, 2000). To arrive at the purchase decision stage, the consideration set makes up the brands that will be selected (Mowen & Michael, 2001). Consumers usually reach purchase decisions based on an investigative approach and. for this reason. brand awareness is fundamental as consumers will "purchase the brand they have heard of" or "chose the brands they know" and then make a decision based on the brands they have acquainted themselves with or the well-recognised brands (Keller, 1993b). In addition, Atilgan, Aksoy, and Akinci (2005) claim to increase the standing of brand awareness, brand equity ensues when the consumer retains awareness and understanding with a brand and possesses resilient and exclusive brand associations at a high level.

According to Aaker's theory (Aaker, 1991a, pp. 63-66) "brand awareness create value in the mind of the consumer in four ways:"

- *Anchor to which other associations can be attached:* brand name, the logo and quality of product or service serves as brand recognition factors that influence related facts and feelings of the brand, a new brand has to win recognition as a purchase decision requires knowledge about the product.
- *Familiarity:* there is a strong correlation with visibility and exposure to the brand and familiarity, the greater the exposure, the greater the familiarity with the brand.
- *Signal of substance:* the brand name is well acknowledged and is an indicator of brand presence and substance; consumers need to know certain facts about a brand that will create a positive brand awareness.
- *Brands to be considered:* when considering a product, brands that are familiar and are first to be to recalled, will be in the consideration set.

Keller (2003b) indicates that brand awareness can be presented as brand recognition and brand recall.

2.5.1 Brand recognition

Aaker (1991b) advocates that the first level of brand awareness is brand recognition and Aaker (1991a) postulates that brand awareness is the ability of the customer to recognise

that a brand is an element of a certain product category. Keller (2003b) defines brand recognition as the ability of a consumer to validate prior experience of a brand when that brand is given as a prompt. In addition, recognition exists when a customer is aware of the brand and deliberates it as one of various options in the suggested category. The author further states that that brand recognition is the consumer's capacity to recall a brand when faced with it tangibly during the point of purchase (Keller, Apéria, & Georgson, 2008). In addition, to make the recognition process more effective, it is essential to link the brand with recall prompts, such as brand name, symbol, and logo slogan or colour enabling the customer to easily identify it at the point of purchase (Keller, Apéria, et al., 2008). According to the decision making process by Proctor (2014), brand recognition has the most significant impact on the decision making process during the evaluation process; it is where customers are exposed to the various product choices to fulfil their own needs. Further impact is also seen during the purchase decision step regarding decision making with regard to groceries, commodities, etc. (Keller, Apéria, et al., 2008). Following brand recognition, brand recall is the second level of brand awareness.

2.5.2 Brand recall

Keller (1993b) suggests that brand recall is the customers' ability to identify the brand when exposed to the product category and relates to the needs met by the category or different stimuli as a signal. According to Aaker (1991b), the significance can also be crucial for routinely consumed products such as milk, cold drinks, etc. these brand decisions are predominately made prior to arriving at the supermarket. Percy and Rossiter (1992) suggest that varying from brand recognition, brand recall transpires when the brand name is initiated by memory given stimuli like product category name. This indicates that the need which is experienced first is associated with the product category which presents possible solutions, within the customer's memory. This means that the customer must remember a brand or various other brands within their own memory in order to make purchase decisions. According to O'guinn, Allen, Semenik, and Scheinbaum (2014), brand recall has been the key principle since the very beginning of modern advertising which has been to ensure consumers remember the brand name. Since recalling the brand name is likely to influence the purchase decision, Percy and Rossiter (1992) reiterate the

aforementioned, which is that the advertiser's primary purpose is to create and enforce brand recall so that the brand is salient for the buyer.

Whilst brand recognition and brand recall are integral levels of brand awareness, as suggested by Keller (2003b), top of mind according to Aaker (1991b) contributes equal importance within brand awareness during the purchase decision process. Further, the author defines 'top of mind' as the first product that the customer will recall within a given product category.

2.5.3 Achieving brand awareness

Brand recognition and brand recall employ two characteristics when achieving brand awareness, the first being increasing the identity of the brand, and second, simultaneously associating the features to the product. This is especially critical for newer products (Aaker, 1991b). In addition, the author has presented elements which contribute to achieving brand awareness:

- *Be different, memorable:* currently there is close similarity amongst various products within respective categories and the marketing communication has close resemblance. It is therefore imperative to distinguish between products whilst maintaining the relationship between the product class and brand for simple recollection.
- *Involve a slogan or jingle:* a robust relationship can be formed between a slogan and a brand since it incorporates a graphic representation of the brand.
- *Symbol exposure:* symbols have a key role since they favour easy visual recollection. An existing or newly developed logo which relates to a brand promotes brand awareness.
- *Publicity:* advertising is modified and tailored to encourage favourable publicity and brand awareness.
- *Event sponsorship:* the principal goal for sponsoring events is to increase and maintain brand awareness.
- *Consider brand extension:* an easy way to facilitate brand recall would be to present the name or logo on products that are part of the brand extension which encourages name prominence.

- *Using cues:* packaging is a primary stimulus with regards to a cue in identifying a brand. If the brand or product name is not recognised by a consumer, the packaging is the only link to brand.
- *Recall requires repetition:* it is simpler to establish recognition of the brand as compared to recall of a brand. Therefore, the association between the brand and product category needs to be firmer ensuring the brand is more dominant than the recognition of the brand. To attain a top of mind recall is harder and is more challenging.
- *Recall bonus*: consistent publicity creates brand awareness and a dominant brand which is achieved by maintaining top of mind, resulting in decline in recalling competitive brands.

In order to understand and measure the elements to achieve brand awareness as discussed above, it is essential to understand where most of the consumer decision making occurs (Keller, 2003b). Within the South African cosmetic industry, consumers can have various reasons for buying a particular product which could be rational, emotional or self-expressive, which is influenced by brand awareness and needs to be measured, as discussed by Svanberg and Maxén (2014).

When referring to the aforementioned literature, various conclusions can be applied to the South African cosmetic industry, where product promotion through brand awareness is one of the simplest and most influential ways to market commodity related products. In view of this consideration, there are comparatively limited product differences, therefore being more competitive is dependent on a strong and recognisable brand. According to Keller (1993b), a strong and recognisable brand is one whose image is held in the memory of consumers and is often linked to a collection of associations.

2.6 Brand association

Aaker (1991a) indicates that the true potential value of a brand is its association and meaning within the customers' mind, which is associated with the foundation for buying decisions and brand loyalty. In addition, Aaker (1991a) suggests that there is a strong interrelation between brand association and brand equity, since brand association seems to

positively influence memory of a brand. In a consumer's mind, these memories predominantly exist as a system of association and by deciphering the brand association's make-up set in a consumer's memory. It empowers marketers with a distinct advantage of brand management with regards to brand image and brand equity. Further, the author indicates that the consumers associate brands with numerous characteristics, such as product, price, packaging and features; all of which impact their purchase decision when a variety of products are encountered. Chen (2001) and Farquhar (1989) suggest that the types of brand associations comprises customer benefits, product usage, product category and product attribute. Keller (1998) categorized brand association into three sub groups; attributes, benefits and attitudes:

2.6.1 Attributes

Keller (2003b) suggests that attributes are the descriptive features which distinguish the product or service. They refer to the customer's judgements on these products and services and influence the consumption or acquiring of the product or service. Further, attributes in themselves may be divided into two categories; as product related attributes and non-product related attributes.

Product related attributes are described as the core elements required to provide the product or carry out the service. Non-product related products are described as peripheral traits that are relative to the utilisation of products or services provided. Product related attributes within the Keller knowledge model comprises price, user and usage imagery, brand personality, emotions and experiences (Keller, 2003b). The price of a product, whilst signifying a crucial phase in the purchasing process, is not reflective of the service delivered or performance of the product. However, Keller (2003b) proposes that price has a significant influence where customers often have powerful perceptions regarding price and value of the brand.

Keller (2003b) indicates that user and usage imagery attributes may derive from a customer's direct experience and interaction with a brand. It could also be formed indirectly from advertising or other information sources which are developed from demographic elements or physiographic elements like gender, age, race and income. The author further indicates sentiments accompanying a brand and the feelings they illicit, can

become intensified during the consumption of the product. Brands can often depict a consumer's own personality or qualities such as trendy or complacent and is often descriptive of what consumers feel regarding the brand. In comparison to what they believe the brand is or its function.

2.6.2 Benefits

Keller (2003b) infers that benefits are reflective of the intimate association which a customer ascribes to a product offering or service and its value to them. Benefits are subdivided into; functional benefits, symbolic benefits and experimental benefits, according to Keller (2003a).

Functional benefits describe the inherent qualities of a product or service which is commonly associated with the product related attributes and generally related to simple stimuli, such as safety or physiological needs, with a need to resolve or avoid a problem.

Experiential benefits are associated with the actual feeling a customer obtains from product use or service and commonly relates to non-product related products. Experiential satisfaction, such as sensory pleasure or cognitive stimulation, is achieved from these benefits.

Symbolic benefits refer to, predominately, the external benefits of product consumption or services which relate to non- product related criteria and underpin the desire for personal manifestation or social acceptance.

2.6.3 Attitudes

Brand attitudes is described as a collective assessment of a brand (Keller, 2003a). The author further suggests that the significance of attitudes is the basis for customer behaviour. One of the acknowledged models of brand attitudes developed from the various models proposed, is the multi-attribute formulation. Here, brand attitudes are symbolic of all the associated attributes and benefits that are prominent in a brand which is accompanied by views regarding product related attributes with the functional and experiential benefits constant in relation to perceived quality. Lastly, brand attitudes would

be associated with non-product related attributes which express a value that reflects the customer's self-image.

2.6.4 Functionality of brand association

An effective marketing plan would require a favourable brand association where the customer is convinced that the brand deliver the attributes and benefits they desire (Keller, 1993a). Research by Keller (1993b) investigated the significance of brand association networks and concluded that understanding brand equity would involve identifying a network of strong favourable distinct brand associations within a consumer's mind. Aaker (1996a) suggests that association networks make up a brand's image, the brand identity, its uniqueness and value to the customer. Therefore, marketers that can accurately recognise the networks, would draw great benefit by uncovering the mechanisms of leveraging brand equity in the market place.

An additional view shared by Van Osselaer and Janiszewski (2001) describes brand association as an instrument to accumulate information to accomplish brand differentiation and brand extension. Further, Biel (1993) states that there are critical factors around preferences that assist in the construction and development of a brand's image. Brand image according to Dobni and Zinkhan (1990) are the emotions and acuities attached to brands by consumers. Brand image further comprises purposeful and figurative brand beliefs. Based on the proposal that consumers buy not only the product, but also the image associated with the product, such as affluence, supremacy, sophistication, and most importantly, identification and association with other users of the brand (Evans, Jamal, & Foxall, 2006).

John, Loken, Kim, and Monga (2006) suggest that, according to literature, numerous methods exist to develop a brand association infrastructure, for which an effective brand image can be delivered. Further, the authors proposed the following few methods: include qualitative techniques like focus groups, as well as quantitative techniques, such as attributing assessment and branding records. In addition, John et al. (2006) propose a newer method called a brand concept map that delivers a consensus map. This method elicits the crucial associations that are required to develop interconnections with consumers. The method also provides marketers with a graphical network to uncover a

greater understanding of how a brand image sits in the mind of consumers, as well as its brand positioning and brand loyalty.

2.7 Brand Loyalty

Research by Dick and Basu (1994) indicates that brand loyalty is a concept which has been studied several times and yet still yields no clear ability to simplify the results obtained. Further, the authors state that there are two distinct definitions of loyalty; firstly, some academics and practitioners view loyalty driven by behaviour and behavioural loyalty, where loyalty is established from a customer's purchasing patterns or repurchases. Secondly, other academics postulate that loyalty is driven by attitude and attitude-behaviour loyalty.

Jensen and Hansen (2006) indicate that, over the last few decades, where loyalty has been a central focus for academia, considerable attention has been given to the attitudinal aspect, after it become apparent that behavioural brand loyalty did not contribute to the understanding of loyalty on its own. In addition, according to Dick and Basu (1994), clarity between loyalty and repurchase has been challenging to outline with most academics suggesting that it is a combination of repurchase behaviour and loyalty.

Brand loyalty, according to Aaker (1991a), is part of brand equity and can be defined as a positive mind set associated with a particular brand that influences repetitive purchases over a period. Further, the article suggests that, when determining the value of a brand, it would be critical to acknowledge that loyalty translates to profits since it is an important factor in valuing a brand. Bandyopadhyay and Martell (2007) propose brand loyalty as a customer who repeatedly purchases one brand over a one year period. Lam, Ahearne, Hu, and Schillewaert (2010) propose that brand loyalty is " a deeply held commitment to re-buy or re-patronize a preferred product or service consistently in the future, causing a repetitive same brand or same brand-set purchasing despite situational influences and marketing efforts having the potential to cause switching behaviour.

Since brand loyalty is central to a brand's value, Yoo and Donthu (2001) concluded that brand loyalty has the propensity to influence repeat purchase of the same product or simultaneously inhibit a change to competitor products. Ergin, Özdemir, and Parılt (2011)

suggest that the propensity to build and retain customer loyalty can influence the wealth of the majority of businesses since it is more cost effective to sell to loyal customers than influencing new customers. Oliver (1997) concurs, claiming that brand loyalty is a steadfast obligation to repurchase or to support a favoured product continuously, in spite of other brands' marketing efforts initiating brand switching. Usunier and Lee (2005) state that loyal customers are averse to switching to other products, despite lower prices or product improvements.

Ukpebor, Ipogah, Aronsson, and Svensson (2008) postulate that consumer's knowledge of value and quality can be linked to brand loyalty. As the more superior the customers see the brand, it is alleged, the more loyal the customer will be and vice versa. Also, the more encouraging associations to the brand, the more loyal a customer will be. Aaker (1991a) stated that if consumers have a low involvement in the brand and its title, it relates to a low brand equity and in reverse, high involvement with a brand or its logo and symbol, equate to high brand equity, where customers have little admiration for other brands. Furthermore, the author describes loyalty as a careful aptitude of the customer's passionate involvement with the brand. It indicates the customer's willingness to alternate between brands when other brands have lower prices or more advanced features. When loyalty has reached its highest form of a brand, its opposition to other brands are at its maximum (Aaker, 1991a).

Aaker (2002) proposed varying grades of loyalty:

- *Non Customers*- refers to those customers who consume competitor brands or do not purchase the product
- *Price switchers*- refers to those customers whom are price conscious
- *Passive Loyal*- refers to those customers who purchase product without reasonable thought
- *Fence sitters*- refers to those customers who are unconcerned towards the various brands
- *Committed*- refers to those customers who are extremely loyal to a brand

In addition to Aaker's classification, Hankinson and Cowking (1996) indicate that Kotler graded the various levels of loyalty as *switchers, shifting loyals, soft-core loyals and hard-*

core loyals. According to Gensler, Dekimpe, and Skiera (2007), hard core loyals are those customers who are inherently loyal and remain within the same scope of sales. Further, potential switchers are those customers that could potentially shift between sales channels. Soft-core loyals, on the other hand, are those customers who are potential switchers that make two or more succeeding purchases within the same sales channel. In addition, switching loyals refers to those customers who were loyal to a brand for a duration of time and who effortlessly changed to another brand due to distinct advantages the new brand offers.

Bloemer and Kasper (1993) conclude that brand loyalty is a channel through which a customer can direct the sentiments towards a brand or service which is an excellent predictor of customer behaviour. Brand awareness, perceived quality and an effective clear brand identity can contribute to a higher brand loyalty (Aaker, 2002). According to Gürbüz (2008), brand loyalty is assumed to be initiated once there has been a positive judgement made with regards to perceived quality. In addition the author concludes that once there is a perception of increased quality, the development of loyalty begins. This suggests that perceived quality has a significant influence of brand loyalty.

2.8 Perceived quality

"Perceived quality can affect willingness to buy and the price customers will pay" (Cole & Flynn, 2009, p. 68). Further brand quality perception is the eventual determinant made by single customer.

An article by Dodds, Monroe, and Grewal (1991) indicates that there have been several studies conducted, focusing on perception of quality and value from a consumer perspective. In addition, it has been suggested that both quality and value are intimately interrelated and that perception of quality is proportionate to the perceived value of a product. Erenkol and Duygun (2010) argue that perceived quality of a product differs from the value of the product as perceived quality is predisposed by the consumer and does not equate the products true value. H.-M. Lee, Lee, & Wu (2011) suggest that brand quality is a collective assessment of the brand distinction which includes both tangible and

intangible aspects. It has been suggested that customers decipher brand quality often differently as compared to the manufacturers (Brucks, Zeithaml, & Naylor, 2000).

Further, Zeithaml (1988) concludes that buyers' decisions are motivated by perceptions of the quality of a product and the overall brilliance or superiority of a product. It is suggested that dominant brands have increased prices where high prices are a direct correlation of high quality. According to Aaker (1991a), perceived quality satisfies the customers' intentions for repurchasing decisions. Aaker (1996b) further states that perceived quality is intangible, which refers to the overall quality or superiority of a product, thus can be denoted as the overall feelings of the brand. It constitutes an integral element within the Aaker's brand equity model.

Pappu, Quester, and Cooksey (2007) indicated the simplest assumption to determine the quality of a brand or service is to create the quality dimension. Brucks et al. (2000) proposed a few factors to evaluate the quality of robust goods, namely:

- *Easy to use:* is regarded as the ability of a customer to begin working and operating the product with the assistance of the accompanying instruction guide
- *Serviceability:* ability of a customer to obtain services from a producer
- *Durability:* refers to the longevity of a product and the time frame it will operate optimally without the need for any repairs
- *Performance:* refers to the efficiency of the product's functioning for its manufactured purpose
- *Excellent feature:* refers to the signature status and importance to social groups

Evaluation of quality regarding products and services are prompted from characteristics customers associate to specific products (Schiffman & Kanuk, 2000). These stimuli or signals/cues may be intrinsic to the product whilst others remain extrinsic. According to Bristow, Schneider, and Schuler (2002), brand name is regarded as one of the various extrinsic indications of product quality. When impartial quality of a product is difficult to define, extrinsic cues like brand name will be considered in the purchasing decision. These authors further advocate that, in the mind of the customer, perceived quality is defined by insights, excellence and dominance of a product. As a result, this motivates brand

integration and elimination which stimulates a confident consideration set when making a purchase decision.

Espejel, Fandos, and Flavián (2007) distinguishes product quality into two distinct views of objective quality and perceived quality. The former refers to the methodical, quantifiable and certifiable nature of products and services, procedures and quality controls. The latter is indicated by the consumers' assessment, conclusion or discernments of quality. Signals which are intrinsic relate to the products' physical nature, like appearance, smell, flavour, etc. Extrinsic signals, on the other hand, refer to non-physical attributes of the product brand name, country of origin and product information, etc.

Before making purchasing decisions, a consumer would first make an assessment or judgement in respect to the product's or brand's perceived quality (Iglesias & Guillén, 2004).

2.9 Repurchase intention

Feng and Yanru (2013) indicate that, in all business environments, customer satisfaction can positively influence profits. Hellier, Geursen, Carr, and Rickard (2003) suggest that customer satisfaction stems from a customer's desires, demands and expectations of a product being met, which is an indicator of future customers' behaviour and repurchase intention. According to Prus and Brandt (1995), customer satisfaction drives brand loyalty and brand loyalty comprises customer attitudes and behaviours, which is reflective of the long term profitability for the company and the brand. Customer attitudes are representative of views, such as repurchase intentions, inclination to recommend the brand or company to others and by doing so, it represents a commitment to resist switching to a competitor. The behavioural component is represented by the above-mentioned, however, it is actionable and may signify repurchase intention. The decision to repurchase denotes the consumer's choice to repeatedly consumer a product. Seiders, Voss, Grewal, and Godfrey (2005) concluded that there is a synergistic association between customer satisfaction and repurchase intention. Gounaris, Dimitriadis, and Stathakopoulos (2010) define repurchase intention as the customer's propensity to purchase products from the exact manufacturer over an extended duration of time. Repurchase intention has been

defined as a behavioural element by Mittal, Ross, and Baldasare (1998), where there is an eagerness and ongoing interest in purchasing a product or brand. There has been a developing awareness of the need to define repurchase intention since it is pivotal to sustaining growth in companies (Richard, 1997). Further, understanding the elements which influence repeat purchases will provide a sustainable competitive advantage.

2.10 Conceptual model and hypothesis development

The empirical test to determine the influence of brand awareness, brand association, brand loyalty and perceived quality on repurchase intention originates from the revised literature on brand management. The foundation for the hypothesis is modelled on the conceptualisation of Aaker's brand equity model (Aaker, 1991a; Keller, 1993b), which influenced the expansion and development measures of brand equity. For the development of this conceptual model, brand awareness, brand association, brand loyalty and perceived quality are the determinants whilst repurchase intention is a single variable outcome. The hypothesized associations between these determinants and the variable outcome are elaborated on hereafter. The figure below illustrates the conceptual model.

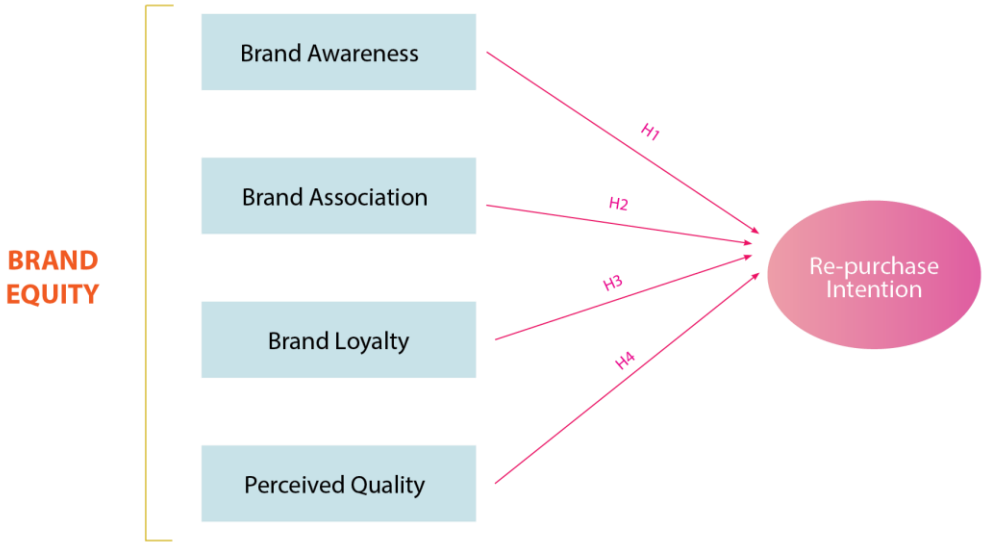

Figure 2.3: A Conceptual Model of Brand Equity

According to Kotler (2000), high brand equity is critical for a brand to be favourably perceived and become dominant in the market. This will enhance brand loyalty, brand association, brand awareness, perceived quality. Further, brand equity is an integral part of evaluating the brand and positively influencing the purchase decision.

2.10.1 Brand awareness and repurchase intention

As noted in the literature review, brand awareness not only assists customers in identifying a brand amongst other products (Heding, Knudtzen, & Bjerre, 2008), but it also affects their decision making, particularly with regards to repurchasing the brand product (MacDonald & Sharp, 2000). Wang and Hwang (2001) suggest an increased brand awareness has a more favourable quality review, which influences a higher market share (Lin, 2006). A higher market share could be viewed as a strong brand awareness which favourably impacts a customer's future brand decisions (Kim, Kim, Kim, Kim, & Kang, 2008). Therefore, it can be posited that the stronger the brand awareness by male consumers, the higher the repurchase intention in South Africa. Based on the prior empirical evidence and Aaker's brand equity model, the following hypothesis is proposed:

H_1⇒ There is a positive relationship between brand awareness and repurchase intention

2.10.2 Brand association and repurchase intention

According to Keller (2003b), brand association can be referred to as the associated information a customer has in their mind with regards to the brand. Research by Keller, 1993b) investigated the significance of brand association networks and concluded that understanding brand equity would involve identifying a network of strong favourable distinct brand associations within a consumer's mind. Aaker (1996a) suggests that association networks make up a brand's image, the brand identity, its uniqueness and value to the customer. Therefore, marketers that can accurately recognise the networks would draw great benefit by uncovering the mechanisms of leveraging brand equity in the market place.

H_2 ⇒ There is a positive relationship between brand association repurchase intention

2.10.3 Brand loyalty and repurchase intention

Deighton, Henderson, and Neslin (1994) define brand loyalty as the attitude a customer has towards a preferable brand. Yee and Sidek (2008) suggest that customers who are loyal to a brand tend to make informed purchases without evaluation. It is this commitment to a brand which influences customers to remain loyal and potentially refrain from switching brands, even in the environment with increased competition. Customers have a superior product knowledge and a variety to choose from since competition is fierce and with rapid changes and constant new product entries (Ballantyne, Warren, & Nobbs, 2006). Therefore, deducing from this reasoning, greater brand loyalty can transfer to continued purchase of a brand, hence repurchase intention. An empirical study by Khan, Rahmani, Hoe, and Chen (2014) supported the positive association between brand loyalty and repurchase intentions of a consumer. Based on the empirical evidence and Aaker's brand equity model, this study infers that brand loyalty influences repurchase intention in South Africa. Therefore the following hypothesis is postulated:

H_3⇒ There is a positive relationship between brand loyalty and repurchase intention

2.10.4 Perceived Quality and repurchase intention

"Perceived quality can affect willingness to buy and the price customers will pay" (Cole & Flynn, 2009, p. 68). Further, brand quality perception is the eventual determinant made by a single customer. In addition, it has been suggested that both quality and value are intimately interrelated and that perception of quality is proportionate to the perceived value of a product. Erenkol and Duygun (2010) argue that perceived quality of a product differs from the value of the product as perceived quality is predisposed by the consumer and does not equate the product's true value.

H_4 ⇒ There is a positive relationship between perceived quality repurchase intention

2.11 Conclusion of Literature Review

As discussed above, the literature review points to a conclusion that the collective factors of brand equity; brand awareness, brand association, brand loyalty and perceived quality seem to influence repetitive behaviour intentions. Hence, this study intends to test the aforementioned statement which aligns itself to the overall hypothesis. Further, from a South African perspective it would be thought-provoking to evaluate whether the abovementioned factors do influence purchasing behaviour amongst males within the cosmetic grooming industry.

3 RESEARCH METHODOLOGY

3.1 Introduction

The relevance of this chapter is to highlight the research instruments utilised as the foundation of this study and in addition to derive the proposed hypotheses, which were supported by the theoretical research. Lincoln and Denzin (2000) describe methodology as "a strategy of inquiry that guides a set of procedures." Saunders and Thornhill (2007) describe research as a methodical gathering of information which requires deciphering and deducing of information to produce an outcome with a distinct objective.

The review of current literature has enabled the author to understand brand equity, brand awareness, brand association, brand loyalty and perceived quality. However, the impact of these constructs and their relationship on repurchase intentions of males within the South African cosmetic industry, warrants further research.

This chapter consists of the research philosophy, methodology, design and data analysis. In addition, the chapter presents the rationale for the research approach, which is discussed and justified having the following hypotheses in question form:

1. Is there a positive relationship between brand awareness and repurchase intention?
2. Is there a positive relationship between brand association and repurchase intention?
3. Is there a positive relationship between brand loyalty and repurchase intention?
4. Is there a positive relationship between perceived quality and repurchase intention?

Further, the chapter addressed the research methodology and approach adopted to collect the data. The description of the research design and methodology is discussed under research methodology. The technique employed to analyse the data is discussed under data analysis which focuses on the sampling strategies, research instrument and data collection techniques. The conclusion of this chapter addresses the concerns relating to reliability and validity of this study.

3.2 Research philosophy

Persson (2010) indicates that, for every conceptual scientific proposal, there needs to be a language that will assist the researcher to depict and describe the authenticity as it is professed to be. It is postulated that every scientific hypothesis and research technique is based on philosophical context (DiBartolo, 1998). Therefore is it critical for researchers to be aware of the philosophical considerations, which form the basis for drawing hypotheses and formulating knowledge. Further, it is regarded as a "thinking activity" with a sole purpose of facilitating our understanding with regards to the world and ourselves (DiBartolo, 1998).

Shadish (1995) describes the importance of the philosophical aspect as the process of assisting us to reveal more accurately why we do things in the manner we do. Philosophy is described as the activity that embodies the formulation of notions, which are created over time and incorporated during the duration of the history of philosophy (Antila, 2013). DiBartolo (1998) suggests that philosophy is a deliberation that describes the evolution of science and includes the manner in which it is performed, translating the understanding of the world. Relating to philosophy irrespective in which arena, does not intend to decipher questions of a chronological, somatic or legislative nature, but rather to facilitate underpinnings, as well as to recommend deductions (Blackburn, 1996). Ramos (1987) indicates that philosophy stipulates a benchmark to examine progression within a field of study and expedites the capacity to prompt and sustain concepts. Bryman and Bell (2007) indicate that research can be carried out utilising either qualitative or quantitative approaches or using triangulation which is a mixture of both. According to Petty, Thomson, and Stew (2012b), an interpretative approach and positivism are exemplars that are recognized to support both quantitative and qualitative research correspondingly. Hair, Money, Samouel, and Page (2007, p. 152) maintain that quantitative data is defined as "measurements in which numbers are used directly to represent the characteristics of something" and since this data is recorded, using number of unit analysis" they are in a form that lends itself to statistical analysis. Further, qualitative data "represents descriptions of things that are made without assigning numbers directly" and as this data is usually collected through interview techniques, deductions can be made through various forms and stages of analysis.

3.3 Interpretivism

An interpretative approach suggests that people are looking to grasp the understanding of the environment in which they exist (Petty et al., 2012b) It is postulated, " meaning is not automatically present in objects or social situations, it has to be constructed and created by individuals (Dyson & Brown, 2005). Research that incorporates a interpretative approach, maintains a research question which is expansive to keep incongruity and the investigation evolves as it progresses (Petty et al., 2012b). The research progression channelled by this exemplar is flexible (Robson, 2011). Further, the investigator interchanges between data gathering and analysis, following indicators, whilst deciphering inductively from the statistics and calculatingly converging on matters hinted by the data.

Bitektine (2007) indicates that, by implementing an interpretivist paradigm, investigators are utilising an inductive approach. Klauer and Phye (2008) determine that an inductive supposition is achieved when a researcher elaborates on a characteristic within a set trial to establish a reason important to both non-observed and non-observable objects. Aside from determining a familiar underlying trait or consistency from related rudiments within a generalization method, inductive interpretation ascertains inconsistency with methods of discrimination and classification (V. Lee & Lo, 2014).

3.4 Positivism

Positivism adopts a consistent authenticity that is quantifiable and seen in a comprehensive methodical manner that is used to construct accurate information (Petty et al., 2012b). Johnston (1986) suggests that it is a philosophy dependant on the gathering of information in a manner of general contentions, assimilated by agreed practices about identifiable occurrences. Investigation methods within the positivism paradigm are directed to understanding the underpinning determinants of ordinary occurrences (Polit & Beck, 2012). According to Lincoln and Guba (1985, p. 36), "there is a single tangible reality 'out there', fragmentable into independent variables and processes, any of which can be studied independently of the others". Further, Persson (2010) indicates that it is envisaged that the positivist paradigm adopts the idea that nature is basically structured

and orthodox, leaving unbiased actuality remaining autonomous of human inquiry whilst anticipating to be determined.

Petty et al. (2012b) proposes that the importance of expounding the paradigm that is employed in the investigation ensures that the reader is equipped to adopt appropriate benchmarks that assist in evaluating the research. Guba and Lincoln (1994) emphasise that positivism is a deductive approach. According to Henwood and Pidgeon (1992), the deductive approach includes a compilation of definite actualities. Henwood and Pidgeon (1992) indicate that the deductive approach is one in which the investigator starts with a conceptual model, credible association amongst concepts, and proceeds onto definite pragmatic substantiation.

3.5 Research Methodology & Design

Frankfort-Nachmias and Nachmias (1992, p. 27) defines research methodology "as a system of explicit rules and procedures upon which research is based and against which claims for knowledge are evaluated". Creswell (2009) suggests that research methodology is actually a classification of evaluation that dictates a set of reasons. Further, Petty, Thomson, and Stew (2012a) accentuate that it signifies a technique adopted for the purpose of accumulating and appraising facts to create comprehension. Yang, Wang, and Su (2006) emphasise that research methodology has a fundamental impact on the authenticity and generality of research whilst playing a pivotal role in creating knowledge. Adopting the appropriate research methodology in the current research is critical as it enables the component of examination to be determined as well as to deduce compatible techniques, which will facilitate the proposed results being uncovered. According to Kneale and Santy (1999), Yang et al. (2006), typically a research design should include:

1. How is data to be acquired;
2. What instruments would be utilized;
3. How would the instruments be adopted; and
4. The anticipated methods for evaluating the statistics gathered.

Hair et al. (2007, p. 151) refer to research design as the "recipe for carrying out the project". Following this principle, the researcher would need to choose a design that

provides relevant information on the research proposition and completes the investigation process efficiently. According to Hair et al. (2007), there are three types of designs that exists:

1. Exploratory research is used when the author has little information about the problem or opportunity. It is designed to reveal patterns, themes, ideas and relationships.
2. Descriptive research is designed to correlate data, which describes the characteristics of the topic of interest in the research. This approach is sub-divided into cross-sectional and longitudinal analysis with the former describing the overview of business elements and the latter describing events over time.
3. Causal research examines if one event influences another.

The research strategy adopted was a causal design. This design is a quantitative research approach which adopted dependant and independent variables to test if the one or more of the events influenced the other.

3.6 Quantitative research

Quantitative research is beneficial since it incorporates definitive criteria and measurement techniques of occurrences within an area of interest that is vital when simplifying, adjusting or extending considerations regarding the events being studied. Hungler and Polit (1999) and Westerman (2014) state that it is a methodology that adopts structured techniques and procedures to gather evidence. In addition, it is accomplished under precise settings, together with emphasising impartiality across statistical exploration.

Quantitative approaches incorporate unprejudiced, stringent, disciplined processes regarding how statistical information is utilised to evaluate a singularity that is used to yield conclusions (Yoshikawa, Weisner, Kalil, & Way, 2008). Grove, Burns, and Gray (2012) propose that it describes assessments and findings, which found and influence associations. Further, Cormack (2000, p. 29) states that it “tests theory deductively from existing knowledge, through developing hypothesized relationships and proposed outcomes for study”.

According to Yoshikawa et al. (2008), the usefulness of a quantitative research hinges on its capacity to define the vigour of mutual causative associations that wavers throughout time. In addition, the approach facilitates the ability to administer or eliminate extraneous dynamics within research make up and enables statistics which are produced to be scrutinised by homogeneous assessment (Duffy, 1985).

3.7 Sampling design

The importance and key considerations for preparing a sampling design can be regarded as multi-faceted, since it is imperative to establish the magnitude for which the design will underline the trustworthiness of the data, its ability to determine the accuracy of the data and the reliability of the investigation or the significance of the results (Santy & Kreale, 1998). This consideration is significant since a holistic erroneous testing design influences the development of unreliable outcomes, leading to unjust analysis and calamitous results.

Grafström (2010) suggests incorporating and implementing a comfortable sampling that is regimented with great scope to be largely applicable. In addition, it must be precise with the ability to integrate various accompanying evidence regarding the population that must be contemplated since the evidence may have to be used considerably to amend the design to a further applicable design.

3.7.1 Target Population

A population is the universe of units from which a sample will be selected (Bryman, 2012). Burns and Bush (2003) suggest that the target population encompasses the complete group under study. It is important to identify the study population since it is vital for the formation and administration of a theoretical test (Klein & Meyskens, 2001). Hair, Black, Babin, and Anderson (2009) suggest that a census is an accumulation of data of an all-inclusive population, whereas as sample is a subsection of a population which represents or replicates features of the entire population, from which you can deduce facts to the whole population group with a margin of error.

Defining clearly the target population enables the investigator to elaborate the characteristics of the study cohort. The population targeted for this study is all South

African males, who potentially use male branded cosmetic products, between ages of 18 and 65, within the Gauteng region. However, for business related research, it is not viable to gather data from an entire population group, therefore the researcher adopted a random sampling method. This study incorporates collecting data from a practical cohort that would be sufficient to make accurate business decisions.

3.7.2 Sampling frame

According to Yang et al. (2006), the study frame refers to the complete research setting and the subjects within the study. Santy and Kreale (1998), on the other hand, define the sample frame as "a selection of subjects from an overall population group that has been clearly defined".

The sample frame for this study constituted employees from four business institutions to which the researcher has access. The combined population of these institutions is approximately 9000. Males comprise at least 45% of this total population. These organisations are deemed suitable for the study as the large population size favours attaining at least 400 responses.

The age of the male population ranges between 18 to 65 years, since18 years is the first applicable age for employment and 65 years is age before retirement, according to SA employment law. The researcher attempted to have a sample size of 400 respondents.

3.7.3 Sampling method

Bryman (2012) suggests that an appropriate sampling method should be employed which would ensure that a fair and unbiased requirement for scientific research is met.

According to Creswell (2009, p. 80), probability refers to a "likelihood that an event would occur." Further, it is important for the sampling strategy as it enables the researcher to utilise data in the sample cohort to deduce resemblances about the population from which the sample was extracted. Palys (2003) emphasises that research objectives and questions often define the sampling structure regarding the cohort or what to sample,

prompting to two dissimilar sampling techniques i.e. probability and non-probability sampling.

The significance of all sampling techniques is to extricate a sample from a given population in order to simplify the results in relation to the population (Santy & Kreale, 1998). Tansey (2007) indicates that with probability sampling, the rules of selection guarantee that the investigator can share outcomes in relation to the population from which the sample was extracted, making the technique valuable for the investigator to generalise conclusions representative of the wider population. On the other hand, non-probability sampling comprises investigators drawing samples from a sizeable population devoid of including random selection (Tansey, 2007) . Henry (1990) cited that the limitation of non-probability sampling is undermined by the bias decisions included in the selection of the sample since the investigators determine the divisions of the population involved.

There are seven types of non-probability sampling techniques discussed in literature i.e. convenience sampling, quota sampling, purposive sampling, dimensional sampling, snowball sampling, volunteer sampling and theoretical sampling (Louis Cohen, Manion, & Morrison, 2000; Tansey, 2007). On the other hand, six types of probability sampling have been discussed (Louis Cohen et al., 2000).

- Simple random sampling, which lists all members of the population and subjects are selected from that list in a random fashion;
- Systematic sampling, which involves selecting members from a population in a systematic rather than a random manner;
- Stratified sampling, in which random selection is leveraged with the intended manipulation of the population list to make certain that particular groups of subjects are not kept out of the sample through chance;
- Cluster sampling, often employed in small-scale research, involves restricting the parameters of the broader population very sharply;
- Stage sampling, which is a supplement of cluster sampling, involves ‘picking’ the sample in stages, in other words obtaining samples from samples; and
- Multi-phase sampling, which draws samples that are to be changed over at different phases of the research.

Lazerwitz (1968) indicates that random sampling provides an appropriate appraisal of the populace, predominantly limiting sample prejudice and thereby making it additionally more representative than non-probability sampling techniques.

This research therefore employed a systematic random probability sample approach as it allowed an equal opportunity of being selected from the population, where the first sample was a simple random probability sample and thereafter a method of n + 3 was adopted.

3.7.4 Sample size

A sample size pertains to the number of components that are included in the investigation. Singh (1986) indicates that a worthy sample has two properties: representativeness and adequacy. It is important to consider the optimal point between costs and abundance of the sample size when endeavouring to draw a sample (Yang et al., 2006). The sufficiency of the sample size is dependant by definite characteristics of the research like the approach in which respondents are chosen, the paradigms being investigated, the justification for the investigation and lastly, the envisioned methods of data examination (D. Randall & Gibson, 1990). Whilst Pedhazur and Schmelkin (2013) indicate sampling size impacts the exactness of appraisal, generally a sizeable sample size decreases testing inaccuracies and improves generalisability of outcomes.

According to Kunene (2008), it is important to define the sample size for any pragmatic investigation. In addition, the superiority of research is dependant by not only the appropriateness of the methodology and instrumentation but also by the pertinence of the sampling approach utilized in the study (Morrison, 1993). As a rule of thumb, a minimum of thirty cases per variable should be used, meaning each measurement item should have at least thirty responses; the current research adopted this sampling approach (Morrison, 1993). Cohen et al. (2000) recommend that non-response or meagre collaboration should be taken into account when defining the sample.

This study consisted of sample size of 208 males which were collected within the time frame set out for the research proposal. However, to ensure that an acceptable sample response was received, the researcher distributed 500 questionnaires within the targeted

organisations. This would deem such a sample appropriate, given that high-level statistics would be employed that increases the chances of reliability (Cohen et al., 2000)

Table 3.1: Profile of respondents

Description of respondent type	Number to be sampled
Total Questionnaires Distributed	500
Total respondents	216
Male employees between the ages of 18-65 in Gauteng	208

3.8 Questionnaire design

Fagarasanu and Kumar (2002) suggest that for all investigative studies, the determining criteria for the inclusion of the measurement methodology are the theoretical hypotheses being measured. The self-administered questionnaire adopted for this research was deemed applicable and beneficial whilst remaining a sophisticated measurement instrument since it encourages confidentiality whilst providing a simple method for gathering data A questionnaire is the most popular research instrument in quantitative studies because of its intrinsic advantages (Creswell, 2009).

In addition, Fagarasanu and Kumar (2002) emphasize the importance of ensuring a well-organised and subject sensitive questions when designing a questionnaire since the respondent's behaviour is dependent upon these criteria, which ultimately impacts their co-operation and the final results.

Reliability, validity and responsiveness are the three factors that impact the prominence of a measurement item (Scholtes, Terwee, & Poolman, 2011). Fullerton (1993), however, warns that irrespective of a measurement item appearing superior, it may not be appropriate or justified to be adopted in every study.

In this study, a verification of the feasibility of the measurement items was undertaken prior to employment, thus ensuring compatibility with constructs as well as support for the theoretical postulation embodying the study (Fagarasanu & Kumar, 2002).

The questionnaire for this study comprised five sections; Section A, B, C, D and E. Section A required the respondents to fill in their background information. Sections B, C, D and E measured brand awareness, brand association, brand loyalty and brand perception, respectively. The research constructs were operationalised in accordance with previous works. Proper modifications were made in order to fit the current research context and purpose (Fagarasanu & Kumar, 2002).

There are a number of methods that assist researchers in gathering data of which one would involve the use of a scale. According to Vogt (1999), the Likert scale is commonly used which measures attitudes, knowledge, perceptions, values and behavioural changes. This study utilised a five-point Likert scale ranging from 1 = strongly disagree to 5 = strongly agree, to measure the data. Responses to the questionnaire were subjected to statistical analysis using SPSS and AMOS, which related to the weighting of the Likert scale.

3.9 Data collection technique

It is critical to obtain honest and accurate information regarding criteria being studied when carrying out an investigation. Equally important is the attentiveness and esteem shown to the data gathering techniques irrespective of its complexities. Lethbridge, Sim, and Singer (2005) elaborate the significance of being meticulous during data collection conducted from questions and observation settings.

There are three things to be considered when determining the data selection techniques to be employed, i.e. the degree of access to data collection obtainable by the researcher, quantity of data mandatory and the sort of research question (Lethbridge et al., 2005). According to Tourangeau and Smith (1996) the importance of the aforementioned has an influence on the answers that will be obtained.

The current trends of data collection techniques are detailed below:

- Focus groups- refers to groups of people, also including a moderator being brought together to concentrate on a specific subject (Lethbridge et al., 2005).
- Here participants interconnect with each other rather than with the investigator, who encourages the expression of ideas and thought of the participants. These thoughts are then exposed, instead of allowing the investigator's agenda to dictate, thereby prompting significant outcomes (Cohen & Manion, 2007).
- Observation- a method of gathering information directly with a unit, which is normally another human being (Potter, 1996). The investigator monitors the conduct and records the properties of the object or person (Potter, 1996).
- Interviews- suggested to "produce first-person accounts of the experience", where the motivation is to obtain a broad and comprehensive report directly from an informant of the experience being investigated (Polkinghorne, 2005).
- A questionnaire- is a mechanism for collecting measured evidence that is generally structured and frequently, numerical data that can be accomplished without the attendance of a researcher and is often easy to evaluate (Wilson & McClean, 1994).
- Further, the validity of the results of a questionnaire is influenced by the attention given to the accuracy of the wording, design of the forms and order of questions, during the administration of the questionnaire (Lethbridge et al., 2005).

For the purpose of this study, a questionnaire (survey method) collection technique was employed. This adopted an approach where potential respondents were contacted at different points in time prior to the commencement of data collection. The purpose of this is to ensure that they are sufficiently briefed about the purpose of the study and also to arrange for the delivery of the questionnaire. A pilot sample of 10 males was chosen to determine any potential shortcomings in design and administration. In terms of the actual data from the instrument, it was screened for outliers and missing values. The collected data was used to test the validity and reliability of the scales (Hardy & Bryman, 2004). After the pilot study, the questionnaire was distributed to the sample group, both by hand and electronically.

As this was a self-administered questionnaire, it was critical that respondents knew the directive upon receipt and completion. Some of the advantages of utilising a self-

administered questionnaire include the following; 1) cheap to administer, 2) quicker to administer, 3) no interviewer variability, and 4) respondents can complete the questionnaire at their own time (Bryman, 2012). The downside of self-administered questionnaires include the following; 1) respondents cannot be prompted if they are unclear, 2) researcher cannot probe respondents to clarify or elaborate an answer, and 3) the response rate can be low (Bryman, 2012).

In order to address some of the issues or disadvantages, such as response rate, a reminder email was sent biweekly from the initial date of distribution to respondents, encouraging them to complete and return the questionnaire. This was important as the electronic channel that hosted the questionnaire was only valid for a period of three months.

3.10 Data analysis

3.10.1 Structural Equation Modelling

The statistical tool adopted in this study to analyse the data was Structural equation modelling. Schumacker and Lomax (2004) suggest that SEM has become a revered statistical practice to evaluate theories within the various fields of study. SEM is defined as "a multivariate, statistical technique largely employed for studying relationships between latent variables or constructs and observed variables that constitute a model" (Qureshi & Kang, 2015)

In addition, accordingly to Stein, Morris, and Nock (2012) SEM can be defined as a statistical technique that enables investigators to form academic models and substantiate fundamental associations through two or more structural comparisons. Further, it may be acknowledged to be comparable to regression analysis, however it is found to be additionally prevalent since it weighs casual relationships among theories whilst concomitantly taking into consideration measurement errors (Sarstedt, Ringle, Smith, Reams & Hair 2014, p.105). Additionally, Washington, Karlaftis and Mannering (2003) postulate that the attractiveness of SEM utilisation in studies may be as a result of its versatility in addressing various conceptual complications as well as its ability to assemble the core facts.

According to Stein, Morris and Nock (2012), SEM is essentially a structure that concomitantly deciphers systems of linear equations which comprise events like regression, factor analysis and path analysis. SEM has a two stage approach, the first being assessment of suitability of the measurement model and scrutinises construct reliability and item reliability (Anderson & Gerbing 1988; Hair et al. 1998:9; Nusair & Hua 2010). Further, subsequent to the measurement model assessment and finalization, construct validity, utilising convergent validity and discriminant validity, is reviewed after the reliability of the scale is confirmed.

The second stage involves examination of the structural model. According to Joreskog and Sorbom (1993) and Schumacker, et al. (2004) the goodness-of-fit indices, including c/d ratio, CFI, NFI, TLI, RFI, IFI and RMSEA, is used to evaluate the general model fit in both measurement and structural model.

Confirmatory Factor Analysis (CFA) procedure is incorporated, which assists in identifying the first stage while multiple regression and path analysis is accepted in stage two. CFA appraises the effectiveness of the latent variables which is measured by the observed variables (Chen, et al. 2011) whilst the function of path analysis is to explore contributing relationships among unobserved variables (Nusair, et al. 2010).

Numerous advantages of SEM have been supported by various academics:

- (Nusair, et al. 2010) indicates that SEM demonstrates the capability to address research questions regarding intricacy of underlying relationships between unobserved variables with observed data;
- SEM promotes efficiency for model testing with utilisation of a complete model for explanatory power and efficiency for model (Hair, et al. 1998);
- SEM can incorporate latent hypotheses in the investigation whilst incorporating measurement inaccuracies in the assessment method (Hair, et al. 1998);
- Albert and Escudero (2003) emphasise that SEM supports exploratory and authenticating postulations of contributory relationships not restrictive to its ability to model measurement inaccuracies, instead allows its adeptness to omit prejudice and distortion;

- Malaeb, Summers and Pugesek (2000) state that "SEM minimizes the differences between the observed covariance's and the model predicted covariance's using methods such as the Maximum Likelihood algorithm to estimate the free parameters";
- Gefen, Straub and Boudreau (2000) indicate that SEM has the capacity to simultaneously model and exemplify the direct and indirect associations occurring between various dependent and independent constructs.
- Production of distinct and exclusively dissimilar coefficients is achievable since SEM possess a gradual characteristic (Jenatabadi & Ismail 2014);
- SEM system permits guaranteeing and appraising a comprehensive model producing goodness-of-fit statistics and weighing the inclusive fit.
- Modelling of graphic interfaces is also facilitated by SEM
- According to Kline and Klammer (2001), facilitating the formation of rational models is achieved since SEM allows academics to model mediator constructs and scrutinize the complete system of indicators;
- Dhanaraj, Lyles, Steensma and Tihanyi (2004, p. 442) indicate that SEM is a popular and effective technique for appraising and investigating the associations between mediator constructs.

3.10.2 Data analysis approach

This section demonstrates the process by which data was collated and analysed. In addition, this section addresses all stages beginning from coding data to scrutinizing the contributing relationships. A description of the comprehensive data analysis is discussed below:-

3.10.3 Data coding using Excel spreadsheet

McLeod (2001) indicates that data refers to an assortment of information. Further, data signifies 'pieces' of evidence which are a direct replication of the singularity under study that is independent from the individuals who gathered it (Polkinghorne 2005, p.138). Data collected for this study was firstly sorted in an Excel formatted spreadsheet before beginning analysis. Sorting or coding involves the allocation of numbers to every answer

within the self-administered questionnaire. It was adopted in the current study to facilitate condensing data into an understandable presentation. Further, preceding coding the data, it was quantitatively assessed.

3.10.4 Descriptive analysis using Statistical Package for the Social Sciences (SPSS)

Descriptive statistics analysis was adopted to obtain a comprehension of the facets for every variable that was revealed by the mean and standard deviation of each factor. The use of the statistical program SPSS was employed to achieve the aforementioned. It is referred to as a 'wrap up' of programs that enables manipulating, examining and displaying of data (Landau & Everitt, 2004). In addition, the program allows a wide spectrum for both univariate and multivariate procedures.

This program proved both advantageous and beneficial to the current study since it scored and assessed data in various ways (Bryman & Cramer. 2003). Following the generation of descriptive statistics of the data, assessment for the reliability and validity of the measurement scales needed to be completed.

3.10.5 Reliability and Validity tests of measurement scales using SPSS

Rationality and accurateness of the test convey both reliability and validity (Wilckens, 2010). Reliability is dependent on enhanced equivalent experiments, whilst validity questions the appropriateness of the experiment to suitably answer the questions being asked; i.e. the validity of the experiment in lucid terms. Reliability is reasoned at two levels i.e. item reliability and construct reliability (Fornell & Larcker, 1981; Hair, et al. 1998, p.11). Chau (1997) indicates that item reliability is ''the amount of variance in an item due to underlying construct rather than to error and can be obtained by squaring the factor loadings''. On the other hand Nusair, et al. (2010, p.315) indicates that construct reliability conveys the magnitude of refection of an underlying factor from a measurement scale.

The Cronbach alpha test was used specifically in the current study to scrutinise construct reliability. It is a tool used for evaluation of the reliability of a pragmatic instrument

anticipated to quantify a specific construct. Further, as a broad rule to facilitate reliability when it is inadequate, is to omit one or more items from the scale. Following meeting the certainty that the observed instrument meets the degree of reliability, the succeeding phase was determining the validity of measurement scales.

Hair et al. (1998, p.11) postulates that validity denotes the varying degree to which a set of measurement objects adequately replicates the interested conception.

Although there are numerous sorts of validity (Nusair, et al. 2010, p.55), focus for this study hinged on convergent and discriminant validity. Examination of the convergent validity was achieved by detecting the relationship amongst measurement items and the specific research hypothesis. Observation of the correlation matrix, including the Average Variance Extracted (AVE) and shared variance which were acknowledged in the subsequent stage, facilitated examination of the Discriminant validity. In addition, the inclusion assessment of item reliability conducted in the next phase was achieved from running factor analysis and examinations of item loadings.

3.10.6 Confirmatory Factor Analysis (CFA)

CFA is an investigative tool permitting researchers to examine hypotheses regarding which paradigms the investigation at hand is assessing and it avails a realistic foundation for scientific clarification (Burton, Ryan, Axelrod, Schellenberger & Richards, 2003). The CFA approach requires that the investigator agrees to a number of constructs i.e. correlated and observed variables quantifying every hypothesis (Schumacker, et al. 2004, p.13). This study, in accordance to data analysis, required model specification to be agreed as the initial stage of CFA. According to Nusair, et al. 2010, p.315), this process had to start by recognising the established associations envisioned to be evaluated and to assess how to determine the specific hypotheses contained in the model. Following specifying the model, the succeeding step was model adaptation (Chen, et al. 2011). Nusair, et al. (2010, p.315) explains that if the variance-covariance matrix came close to the model but did not satisfactorily reproduce the sample variance-covariance matrix, improvement and re-examination would be required to the model to make it identifiable. Thereafter model fit would be appraised. The significance of this step assessed the extent to which the postulated theoretical model was authenticated by the sampled data (Nusair et al.

2010).Model fit predictors i.e. Chi-square/degrees of freedom (Chen & Lin 2010), Goodness of Fit Index (GFI), Augmented Goodness of Fit Index (AGFI), Normed Fit Index (NFI), Incremental Fit Index (IFI), Tucker-Lewis Index (Ferrell & Hartline), Composite Fit Index (CFI) and the Random Measure of Standard Error Approximation (RMSEA) were all examined to evaluate model fit.

3.10.7 Reliability and Validity tests in CFA

After achieving overall fit the next step followed by assessing reliability and validity, being guided by literature (Fornell, et al. 1981; Gerbing & Anderson 1988; Hair, et al. 1998).

Squaring of factor loadings was carried out to evaluate item reliability (Chau 1997). Chau (1997) defines item reliability as "the amount of variance in an item due to underlying construct rather than to error".

Utilising AVE, evaluation of discriminant and convergent validity was conducted (Fornell, et al., 1981). A low-cross association implies discriminant validity whilst dominant loading of items on their conversant construct is a signal of convergent validity (Nusair et al., 2010). Discriminant validity is defined by the extent to which a constructs is empirically dissimilar compared to other constructs within the model, which includes its link with other constructs as well as how explicitly the items represent only this sole construct. Sarstedt et al. (2014) emphasises that convergent validity on the other hand, refers to the degree to which a construct is epitomised by its measurement items.

3.10.8 Path Modelling

Path analysis followed as the next phase of data analysis utilizing the SEM. Roche, Duffield and White (2011) indicate that path modelling defines the relationships amongst observed or measured variables and theoretical constructs. Path modelling examines the structural pathways of the hypothesized research model (Anderson, et al. 1988). The theoretical foundations and the consequence amongst associations between model constructs was tested and identified by carrying the SEM procedure (Jenatabadi, et al,. 2014). The structural model within this study was achieved by assessing the p-values,

including the standardized regression coefficients. Inclusion of path modelling warrants the explanation of standardized regression coefficients as well as predictive ability

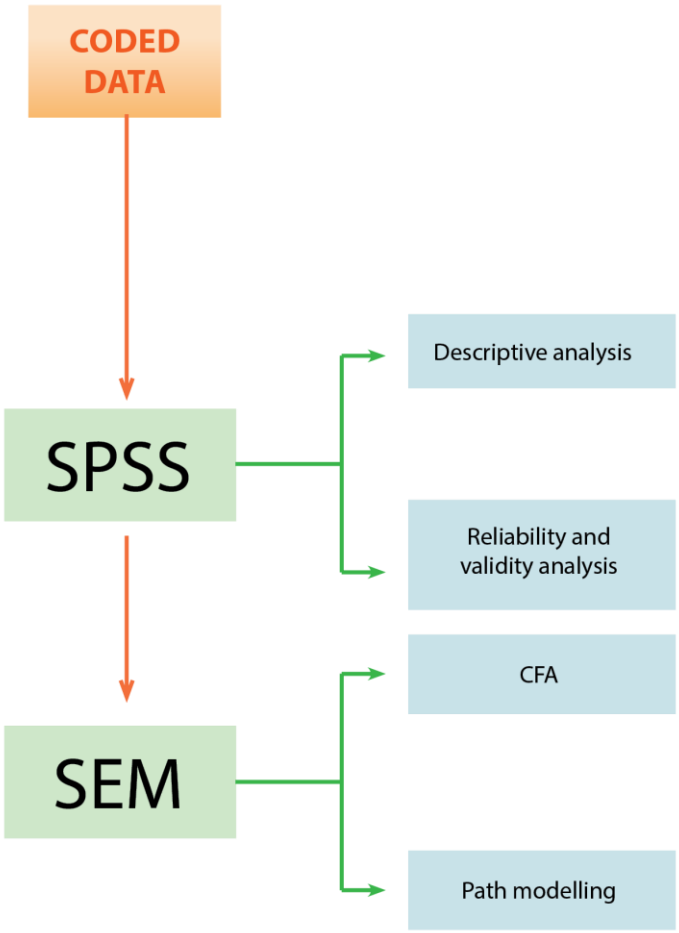

Figure 3.1: A diagrammatic representation of the overall data analysis approach

3.11 Summary

This section highlighted the adopted methodology in the current study and was presented with three main headings:-

- **Research philosophy** which described philosophies incorporated in this study

- **Research methodology** described the design, methodology and sampling strategy utilized in this study
- **Design and data analysis** described the data analysis techniques included in this study

In the following chapter, results, finding, and data analysis is highlighted.

3.12 Limitations of the study

The use of respondents from corporate institutions may pose a limitation, as the results could not be generalised to males working or practicing in other fields. Further, the sample size of 400 is relatively small in comparison to the total male cosmetic population. Therefore due consideration should be taken when extrapolating data. In addition, the accuracy and validity of the information could be subject to bias, as respondents may wish to be viewed in a particular light and influenced to answer in a manner reflective of their desired characteristics versus their actual characteristics. The researcher does assume that the respondent's perceptions and answers are precise. The researcher is also aware that the analysis and interpretation may be subjected to preconceived results.

4 RESULTS AND FINDINGS

4.1 Introduction

This chapter focuses on presenting pragmatic outcomes of the research. The SPSS 22 and AMOS 22 statistical programs were utilised to analyse the data. The current study has objectives, theoretical suppositions and hypotheses put forward. As such, these propositions need to be supported by empirical evidence which facilitates confirmation and validation. The chapter commences with descriptive statistics which provide an explanation of the sample cohort together with accompanying statistics. Following this, scale item results from the tested data are presented. Thereafter, reliability and validity test are respectively discussed. Reliability tests were conducted to gauge the reliability of measures whilst validity test were scrutinised to consider convergent and discriminant validity independently. To sum up this chapter, the employment of Structural Equation Modelling which was utilised as the measurement and structural model, is discussed.

4.2 Descriptive Results

The self-administered questionnaire was both hand delivered and electronically distributed. For both media of distribution there was distinctive guidance provided as to how to how to comprehensively complete the questionnaire. 500 questionnaires were distributed with 216 being successfully completed, with 208 suitable for analysis. Therefor the response rate for this study was 43 percent. It could be argued that the response rate was low, however given the limitations associated with the use of self-administered questionnaires for data collection, it was expected (Fatoki & Asah, 2011). Santy and Kreale (1998) indicate that the primary objective of the investigator should be to describe and present the demographic and descriptive characteristic of the sample cohort in a simple and understandable manner. Further it is emphasised that descriptive statistics examine patterns in order to collate and exhibit a cluster of data which aims to define the individualities of the cohort in order to draw associations.

Table 4.1: presents the outline for the sample cohort, which includes frequency and percentages associated with the distribution of the respondents. The results are discussed thereafter.

Table 4.1: Sample Demographic Profile

Gender	**Frequency**	**Percentage**		**Brand choice experience**	**Frequency**	**Percentage**
Male	208	96.3 %		Less than 1 year	12	5,6 %
Female	8	3.7 %		1 to 4 years	87	40,3 %
Total	**216**	**100 %**		5 to 8 years	56	25,9 %
				9 to 12 years	18	8,3 %
Race	**Frequency**	**Percentage**		13 years and above	43	19,9 %
African	91	42,1 %		**Total**	**216**	**100 %**
White	49	22,7 %				
Asian	64	29,6 %		**Money spent on brand**	**Frequency**	**Percentage**
Coloured	12	5,6 %		R50-R100	27	12,5
Total	**216**	**100 %**		R110-1280	64	29,6
				R290-R370	45	20,8
Age	**Frequency**	**Percentage**		R380-R500	31	14,4
18-24	14	6,5 %		Over R500	49	22,7
25-34	84	38,9 %		**Total**	**216**	**100 %**
35-39	77	35,6 %				
40-44	19	8,8 %		**Cosmetics group**	**Frequency**	**Percentage**

45-49	13	6,0 %
Above 49	9	4,2 %
Total	**216**	**100 %**
Male brand	**Frequency**	**Percentage**
Nivea for Men	75	34,7 %
Vaseline for Men	84	38,9 %
Dove for Men	19	8,8 %
Gillette	23	10,6 %
Clarins	8	3,7 %
Kheils	2	0,9 %
L'Oreal Men	5	2,3 %
Total	**216**	**100**

Fragrances & Body sprays	72	33,3 %
Shaving preparations	49	22,7 %
Skin care products	39	18,1 %
Hair care products	24	11,1 %
Shower gels	32	14,8 %
Total	**216**	**100 %**

4.2.1 Gender and race

Among the samples collected, it was a complete male sample with the majority respondents being of African descent at 42 percent, following with Asian respondents at 29 percent and 22 percent and 5 percent for white and coloured respondents respectively.

4.2.2 Age

The majority of the respondents that represented 38 percent of the cohort were aged between 25-34 years old, while those aged between 35- 39 represented 35 percent of 25-39. According to StatsSA, 2014) South Africa has 35.3 million employees across all industries with a the total number of males employed being 48 percent. 17.3 million Male employees are a potential target group within the South African male cosmetic industry. The cohort for this study represented the financial sector. This sector makes up 13 percent of the total employment across South Africa and is often dominated by high income earners. Considering that 73 percent of the cohort of this study is represented by individuals between the ages of 25-39; this makes them a true reflection of the targeted audience for the South Africa male cosmetic industry.

4.2.3 Male brand and brand choice experience

The brands selected for this research was determined by what the investigator had found to be the mostly commonly presented male cosmetic brands retailed across the various supermarkets chain stores as well as large fashion retailers.

Euromonitor (2015) indicates that the South African men's cosmetic sector showed strong, yet slower growth in 2014, as compared to 2013. Unilever SA dominated the men's grooming segment for the year ending 2014 with 36 percent market share, a clear demonstration of its strong marketing focus, which correlates directly to the research findings which were that Vaseline for Men dominated at 38 percent within the research cohort. Unilever dominated the research findings with 58 percent total product usage. This was then followed by Proctor & Gamble and Tiger Brands with 8 percent market share respectively. Other brands like Beiersdorf and Revlon made up a smaller percentage of the market share. However, Nivea for Men, a Beiersdorf product, had a strong representation at 34 percent within the research cohort. The two luxury brand, namely Clarins and Kheils, made up only 4.6 percent of consumption amongst the cohort. The aforementioned could be used as an indication that disposable income is still directed toward highly visible and market dominated cosmetic products.

4.2.4 Money spent on brands and cosmetic group

Extrapolating from the results, the largest percentage of respondents, which correlates to a 29.6 percent spent above the bare minimum of 50 to 100 ZAR, for male related cosmetic brands. The second highest representation of consumption was 22.7 percent and was the highest parameter of over 500 ZAR within the study cohort. Average price being 290-370 ZAR had a 20.8 percent representation. These results possibly reflect a similar spending trend within the South African male cosmetic market.

The most significant spend within the cosmetic group was found within the fragrance and body spray category for 33.3 percent of the respondents. Following this 22.7 and 18.1 percent was on shaving preparation and skin products respectively. The least significant at 11.1 percent, was hair care products.

4.3 Reliability

Three methods i.e. Cronbach's alpha test (Cronbach α), Composite Reliability test (CR) and Average Value Extracted (AVE) test, were used to confirm reliability of the research measures used for this thesis. It was imperative to conduct all three tests to ensure the measure of reliability. The intention of the Cronbach's alpha test is to verify reliability. CR and AVE on the other hand, aim to validate and ratify the presence of reliability. Table 4.2 show the results of all three tests used to check the research measure reliability. Further, the descriptive statistics illustrates the mean values with regard to the responses as well as the Standard Deviation Values.

Table 4.2: Scale Accuracy Analysis Statistics

Research Construct	Descriptive Statistics	Cronbach's Test	C.R. Value	AVE Value	Highest Shared	Factor Loading

		Mean Value		Standard Deviation		Item-total	α value			Variance	
BAW	BAW1	5.301	5.404	.977	.846	.653	.862	.849	.517	.454	.732
	BAW2	5.532		.985		.651					.726
	BAW3	5.671		.903		.678					.748
	BAW4	5.676		.912		.545					.532
	BAW5	5.431		.903		.616					.633
	BAW6	4.935		.888		.570					.570
	BAW7	5.398		.880		.621					.628
	BAW8	5.287		.896		.559					.558
BAS	BAS1	4.630	5.133	.900	.882	.529	.723	.504	.5.01	.333	.564
	BAS2	5.343		.914		.665					.632
	BAS5	5.343		.906		.582					.506
BL	BL1	5.463	5.262	.906	.892	.647	.711	.534	.508	.366	.699
	BL2	5.060		.963		.647					.503
PQ	PQ1	5.727	5.576	.787	.7377	.528	.701	.771	.500	.454	.638
	PQ2	5.583		.858		.520					.629
	PQ3	5.356		.899		.507					.584
	PQ4	5.639		.925		.528					.870
PI	PI1	5.028	5.140	.879	.861	.676	.781	.613	.507	.354	.833
	PI2	5.051		.935		.624					.719
	PI4	5.065		.975		.528					.624
	PI5	5.417		.899		.630					.572

4.4 Cronbach's Alpha Test

Internal reliability of each construct was assessed utilizing the standardised Cronbach's coefficient alpha. A higher level of Cronbach's coefficient alpha confirmed a higher reliability of the scale (Chinomona, 2011). Furthermore, higher inter-item correlations revealed statistical agreement among the measured items. The results of scale reliability tests are presented in Table 4.2. As can be seen, item-to-total values ranged from 0.507 to 0.678 and therefore, were above the cut-off point of 0.3 (often ≦0.3) recommended by Dunn, Seaker and Waller (1994) in order to improve the internal consistency of the construct. Nunnally and Bernstein (1994) recommend a Cronbach's alpha value that is equal or greater than 0.7. As can been seen in table 4.2, Cronbach's alpha coefficients are acceptable as they ranged from 0.701 to 0.862, exceeding the recommended threshold of 0.7 (Nunnally & Bernstein, 1994) therefore, confirming that the measures used in this study are reliable.

4.5 Composite Reliability (CR)

Internal reliability of each construct was assessed using the Composite Reliability (CR) index test, as recommended by Chinomona (2011) and Nunnally (1967). Further, the following formula equation is applied to test CR:

CRη=(Σλyi)2/[(Σλyi)2+(Σεi)] :

> Composite Reliability = (square of the summation of the factor loadings)/{(square of the summation of the factor loadings)+(summation of error variances)}

According to the literature a Composite Reliability index that is greater than 0.7 depicts an adequate internal consistency of the construct (Hair, Anderson, Tatham, & Black, 2006). Nunnally (1967), on the other hand, indicates that adequate internal consistency of the construct in achieved with a CR index greater than 0.6. The results in Table 4.2 indicate that composite reliability (C.R.) indexes were between 0.504 and 0.849 which was significant for Brand awareness, Perceived quality and repuchase intention. Brand loyalty and Brand association was below the 0.6 recommended index for significance, however those values exceeded the estimate criteria used by prior literature (Hair et al., 2006).

4.6 Average Value Extracted (AVE)

Chinomona (2011) indicates that "The average variance extracted estimate reflects the overall amount of variance in the indicators accounted for by the latent construct". AVE is tested employing the flowing formula:

$V\eta=\Sigma\lambda yi2/(\Sigma\lambda yi2+\Sigma\varepsilon i)$:

AVE = summation of the squared of factor loadings/{(summation of the squared of factor loadings)+(summation of error variances)}

The average variance extracted estimate revealed that the overall amount of variance in the indicators were accounted for by the latent construct. Values for the variance extracted greater than 0.40 demonstrated that the indicators adequately represented the latent construct.

Overall, all average variance explained (AVE) values ranged from 0.500 to 0.517, thus within the marginal to acceptable threshold recommended by (Sarstedt, et al. 2014; Fornell, et al., 1981; Fraering & Minor, 2006). These results provided evidence for marginal to acceptable levels of research scale reliability. Altogether, the construct reliabilities and the average variance extracted estimates posited that the scales are internally consistent.

4.7 Validity

Validity tests that included covergent and discriminant validity were conducted and evaluated.

4.7.1 Convergent Validity

4.7.1.1 Research Constructs and Factor Loading

Sarstedt et al. (2014) explains that convergent validity governs the degree to which a construct converges in its indicators by giving an explanation of the items' variance. Aside from the assessment of convergent validity of items conducted through scrutinising

correlations in the item-total index (Nusair, et al. 2010), as recommended by literature, factor loadings were tested to determine convergent validity of measurement items (Sarstedt, et al. 2014). Nusair et al. (2010) indicate that items demonstrate worthy convergent validity when they load strongly on their common construct.

Convergent validity was measured by assessing if individual item loadings for each corresponding research construct were greater than 0.5, which signifies convergent validity as suggested by Anderson and Gerbing (1988). As indicated in Table 4.2, the factor loadings ranged from 0.503 to 0.748. All the items used for this study had a loading of more than the recommended 0.5, indicating acceptable individual item convergent validity as more than 50 percent of each item's variance was shared with its respective construct. This finding was supported the convergent validity of all scale items.

4.7.2 Discriminant Validity

4.7.2.1 Correlation Matrix

When testing for discriminant validity or not, it is critical to distinguish if the observed variable shows a higher loading on its own construct than on any other construct included in the structural model. Chinomona (2011) suggests that to test for discriminant validity is to evaluate if the association between the research constructs is less than 1.0.

As indicated in Table 4, the inter-correlation values for all paired latent variables were lower than 1.0, therefore positing the existence of discriminant validity. All the latent variables had values less the recommended 0.7 (Nunnally & Bernstein, 1994).

Table 4.3: Correlation between constructs

Correlations

	BAW	BAS	BL	PQ	PI
BAW	1				
BAS	.235**	1			
BL	.674**	.516**	1		
PQ	.331**	.408**	.461**	1	
PI	.138*	.147*	.137*	.674	1

**. Correlation is significant at the 0.01 level (2-tailed).

*. Correlation is significant at the 0.05 level (2-tailed).

4.7.2.2 Inter-construct correlation matrix

The inter-construct correlation matrix was used to test for discriminant validity of the research constructs. Correlations among latent constructs were assessed in order to observe if they were below 1.0. A value of less than 0.7 between research constructs is necessary to confirm discriminant validity (Nunnally & Bernstein, 1994).

4.7.2.3 Average Value Extracted (AVE) and Shared Value (SV)

Discriminant validity was also confirmed by testing if the AVE value was greater than the highest shared variance (S.V.) value (Fornell & Larcker, 1981). As indicated in Table 4.2, all the average value extracted (AVE) were above the shared values (SV) for all the research constructs, therefore further confirming the existence of discriminant validity. The average variance extracted (AVE) of (BAW) is 0.417 which is greater that the square of the shared variance of (BAW) and (PQ) which $[(0,631)^2] = 0,398$. This therefore proves the existence of discriminate validity (Nusair & Hua, 2010).

4.7.3 Confirmatory Factor Analysis

In order to check the reliability and validity of the measurement instruments, the current study conducted a confirmatory factor analysis (CFA). Below is a diagram representing a CFA model using AMOS version 22.

4.7.3.1 CFA model

Figure 4.1 depicts the Confirmatory Factor Analysis model. The circles or ovals exemplify the latent variables in this model while the rectangles or squares symbolize the observed variables with their adjacent measurement errors seen in circular or oval shape. The correlation between variables is seen by the Bidirectional arrows. Jenatabadi et al., (2014) state that "The CFA model is a pure measurement model with un-gauged covariance between each of the possible latent variable pairs". The goodness-of-fit values that subsequently expand measurement scale levels are the outcome of this procedure (Hair et al,. 1998). As recommended by literature, this investigation utilised the goodness-of-fit values to assess the measurement model (Hair, et al. 1998; Schumacker, et al. 2004).

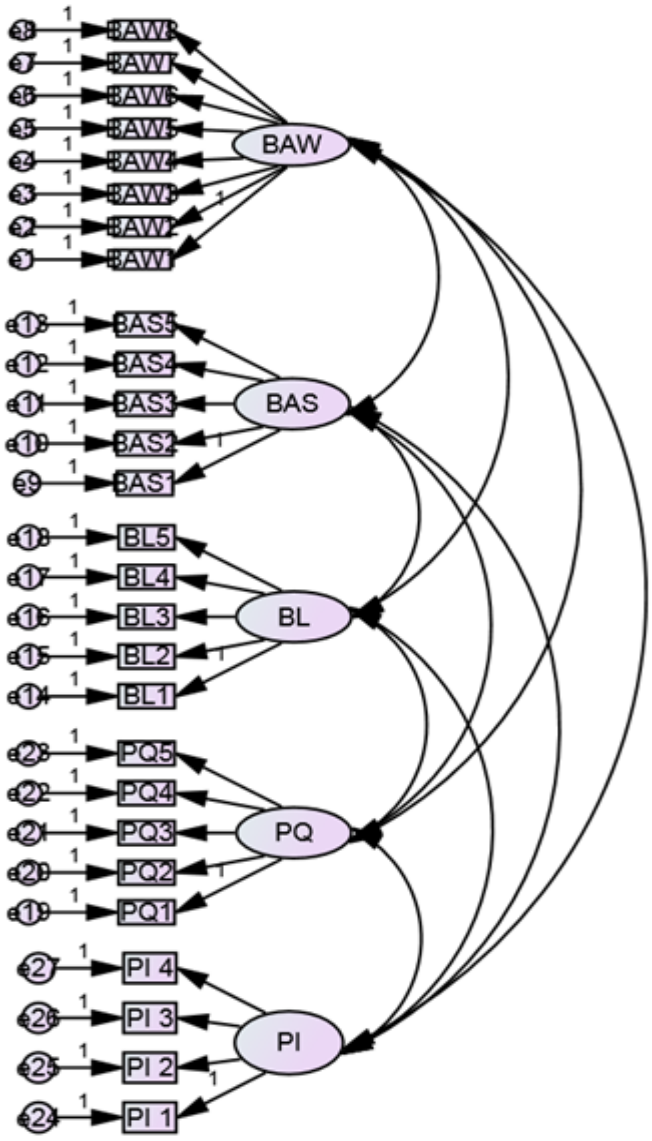

Figure 4.1: Confirmatory Factor Analysis Model

4.7.4 Model Fit Assessment

The researcher adapted the two-step model building approach recommended by Nusair and Hua (2010). In the first phase, a confirmatory factor analysis was used to measure the adequacy of the measurement model. Both construct reliability and item reliability were checked. Once scale reliability was confirmed, the construct validity using discriminant validity was tested before the measurement model was assessed. In the second phase, the structural model was evaluated. The overall model fit in both measurement and structural models was evaluated making use of goodness-of-fit indices including c/df ratio, CFI,

NFI, RFI, IFI and RMSEA (Schumacker & Lomax, 2004). The results for the measurement model are illustrated in Table 4.4. The ratio of chi-squared over degree-of-freedom was 1.015. The goodness-of-fit index (GFI) value was 0.936 that indicates acceptable fit. This study reports on four other model fit indices that have been observed as robust to sampling characteristics (Hair, et al, 2006), that is: the comparative fit index (CFI), incremental fit index (IFI), Normed fit index (NFI) and the root mean square error of approximation (RMSEA). The CFI, NFI, IFI, RFI indices all had values of above 0.9 therefore indicating adequate fit whilst the RMSEA index had a value less than 0.08 as recommended by Wallace and Sheetz (2014). Most of the item loadings were above 0.6 thus acceptable according to Fraering and Minor (2006). The average variance extracted (AVE) of (BAW) is 0.517 which is greater that the square of the shared variance of (BAW) and (PQ) which $[(0,674)^{2}] = 0.454$. This therefore proves the existence of discriminate validity (Nusair & Hua, 2010).

Table 4.4: Model Fit Results - Structural Model

Model fit criteria	Chi-square (χ^2 /DF)	NFI	TLI	IFI	CFI	RMSEA
Indicator value	1.015	0.91	0.936	0.999	0.998	0.008

Note: (χ^2 /DF)= Chi-square/degrees of freedom NFI= Normed Fit Index TLI= Tucker-Lewis Index IFI= Incremental Fit Index CFI= Comparative Fit Index RMSEA= Root Mean Square Error of Approximation

4.7.5 Chi-square (χ^2 /DF)

Examining the general fit of th model is done by utilising the Chi-sqaured (Chen, et al. 2010). According to Chinomona (2011) an indication for a satisfactory model fit is indicted by a chi-square value where the over degree of freedom of the value is below 3. The chi-square value of 1.015 indicated in the table above denotes an acceptable model fit.

4.7.6 Normed Fit Index (NFI)

A NFI value above 0.9 indicates good fit as postulated by Bentler, et al. (1980) The NFI value in this study of 0.91 therefore a good fit as indicated in the table above.

4.7.7 Tucker-Lewis Index (Ferrell & Hartline)

Hooper, et al, *(*2008) indicate that a TLI value which is 0.9 or above is a signal of suitable model fit. The TLI value in table 4.4, is 0.93, confirming a suitable model fit.

4.7.8 Incremental Fit Index (IFI)

According to Chinomona (2011), an IFI value equal to or greater than 0.9 represents an acceptable model fit. The IFI value presented, is 0.999 which therefore meets the recommended threshold signifying a good model fit.

4.7.9 Comparative Fit Index (CFI)

Byrne (1998) indicates that the Comparative Fit Index which accounts for sample size, is a revised form of NFI. The CFI is equally applicable within small sample cohorts (Tabachnick & Fidell, 2007). Literature indicates that a CFI value equal or greater than 0.9 is a good indicator of an acceptable model fit. The CFI value in the table, is 0.998 confirming a suitable model fit.

4.7.10 Root Mean Square Error of Approximation (RMSEA)

Academics infer that a RMSEA value between 0.05-0.08 is a sign of good model fit (Dyson & Brown, 1993). Given that all six goodness-of-fit indices provided in Table 4.4 meet their respective recommended thresholds, it can be concluded that the data is fitting the model.

4.8 Hypothesis Testing

Following the assessment and finalization of the hypothesized measurement and structural model, examination of causal relationships amongst latent variables by path analysis was the next step (Nusair, et al. 2010). According to literature, SEM emphasises that certain latent variables influence other latent variables either directly or indirectly with the model, which results in estimation results that signify how the latent variables are associated. The estimation results for this study are found in table 4.5. The table contains the proposed hypotheses, factor laodings and the p values to indicate significance or rejection of hypotheses. According to Chinomona, Lin, Wang & Cheng (2010), p values <0.05, <0.01 and <0.001 are signals of relationship significance. Further, positive factor loadings signal strong relationships amongst latent variables.

Table 4.5: Hypothesis Relationships

Proposed Hypothetical Relationship	Hypothesis	Factor Loading	P Value	Supported/ Rejected
Brand awareness **(BAW)** → Repurchase Intention**(PI)**	H_1	0.20^c	***	Supported and significant
Brand association **(BAS)** → Repurchase Intention**(PI)**	H_2	0.89^c	***	Supported and significant
Brand loyalty **(BL)** → Repurchase Intention**(PI)**	H_3	0.30^c	***	Supported and significant
Perceived quality **(PQ)** → Repurchase Intention**(PI)**	H_4	0.11^c		Supported and insignificant

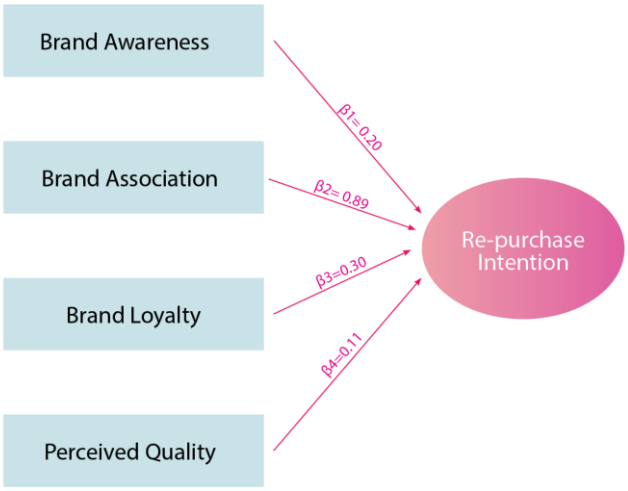

Figure 4.2: Path Model

4.8.1 Discussion of Hypotheses Results

As seen in table 4.5, hypotheses one and two were at least at a significant level of $p < 0.01$. Hypotheses one and two (H1 and H2) posited that repurchase intention had a positive and direct influence on consumer brand awareness and associations. Both hypotheses were supported, therefore, indicating that the extent to which a consumer is aware of a brand and its associations has an important and significant influence on whether or not that consumer repurchases that brand. However while hypothesis three is also significant at $p < 0.01$ - hypothesis four is not significant. Hypotheses three (H3) posited that brand loyalty and repurchase intention had a positive relationship and this was

supported in a significant way. Hypothesis four (H4) posited that perceived quality and repurchase intention had a significant and supported relationship. This implied that consumers are willing to repurchase products if they consider them to be of high quality. The hypothesis was supported but in an insignificant way.

5 CONCLUSIONS AND RECOMMENDATIONS

5.1 INTRODUCTION

The purpose of this chapter is to make deductions from the results presented in chapter 4. The chapter will first provide an overview of the findings. Herein, major findings of the study are reviewed once more. Thereafter, the implications that findings have on the current study are described. This will be followed by the conclusion and recommendations with regard to the findings. In the last part of the chapter, the study's limitations are described including suggestions for future research.

5.2 OVERVIEW OF THE FINDINGS

The current study sought to investigate brand equity as a predictor of repurchase intention of male branded cosmetic products in South Africa. The four hypothesis developed by the study were examined. Findings regarding each of the hypotheses are discussed below.

5.2.1 Brand Awareness (BA) and Re-purchase Intention (RI).

It was revealed that brand awareness has a positive relationship with repurchase intention. This was expected since the brand awareness is likely to provide more knowledge of cosmetic branded male products. Based on these findings, it can therefore be affirmed that male customers are likely to purchase branded cosmetic products once there is an awareness – perhaps through promotion or advertisement.

5.2.2 Brand Association (BA) and Re-purchase Intention (RI).

Findings indicated that brand association has a positive relationship with repurchase intention. Thus the more the male customers associate a branded cosmetic product with self, the more they are likely to purchase the branded product. In this regard, branded male cosmetic products should be associated to male preferences.

5.2.3 Brand loyalty (BL) and Re-purchase Intention (RI).

A positive and significant relationship between brand loyalty and purchase intention was revealed. This means that the more the loyalty the male customers have to branded cosmetic products, the more they are likely to purchase the products.

5.2.4 Perceived quality (PQ) and Re-purchase Intention (RI).

A positive and insignificant relationship between perceived brand quality and purchase intention was identified. Perhaps, as a result of perceived brand quality by mail customers, there are most likely to end up purchasing branded cosmetic products, although the influence is a weak one compared to the impact of other variables in the conceptual model.

5.3 IMPLICATIONS OF THE STUDY

The findings have produced some inferences for the study. They are discussed below.

5.3.1 Brand Awareness (BA) and Re-purchase Intention (RI).

Findings have revealed that this relationship is significant at p-value = 0.01. This means that brand awareness has a positive association with re-purchase intention – the relationship is relatively strong ($\beta 1 = 0.20$). This implies that the re-purchase intention is strongly influenced by brand awareness when compared to other factors such as perceived quality. However, it is suggested that marketing practitioners or brand managers should prioritise other factors that have a strong influence on re-purchase intention such as brand loyalty and brand association.

5.3.2 Brand Association (BA) and Re-purchase Intention (RI).

Findings have revealed that this relationship is significant at p-value = 0.01. This means that brand association has a positive relationship with re-purchase intention – the relationship is very strong ($\beta 1 = 0.89$). In fact, it brand association has the strongest effect on re-purchase intention when compared to other aforementioned factors in the conceptual model. This implies that the re-purchase intention is strongly influenced by brand

association. Therefore, brand managers ought to focus more on strategies the enhance brand association since to has the strongest impact on customer re-purchase intention.

5.3.3 Brand loyalty (BL) and Re-purchase Intention (RI).

Findings have revealed that this relationship is significant at p-value = 0.01. This also means that brand loyalty is positively associated with re-purchase intention in a significant way. This implies that the re-purchase intention is strongly influenced brand loyalty (β1= 0.30) when compared to other factors such as brand awareness and perceived quality. Therefore, brand managers should prioritise brand loyalty and association when designing strategies that eventually impact on re-purchase intention.

5.3.4 Perceived quality (PQ) and Re-purchase Intention (RI).

Findings have revealed that this relationship is insignificant. This means that perceived quality has a positive and but relatively weak significant effects on re-purchase intention. In fact, it has the weakest impact on re-purchase intention when compared to other aforementioned factors in the conceptual model. This implies that the male customers consider less the quality matters when compared to brand loyalty, association and awareness in their decision to re-purchase. Therefore, marketing managers should pay less attention on this variable as a strategic tool to influence re-purchase intention

5.3.5 Overall implication of the study

These findings on the whole indicate that the study's theoretical proposition is valid and acceptable. It is also evident that brand association, brand loyalty, brand awareness and perceived quality all have a positive effect on re-purchase intention of male branded cosmetic products. However, perceived quality has the weakest impact on re-purchase intention.

5.4 CONCLUSION

Chapter 5 concludes the study "The impact of brand awareness, brand association, brand loyalty and perceived quality, on the repurchase intentions of branded cosmetics among males in South Africa". It spells out the implications of the study for academics and industry alike. The author also discusses the studies limitations and makes recommendations for future research.

Structural equation modelling (SEM) was used to analyse the data and path modelling was used to define the interactions between the variables under study.

The diagnostic results of the study inferred that the proposed hypothesis H1, H2, H3 and H4 were supported. The results indicate that all the variables have a relationship with social media advertising with the strongest relationship being with quality perceptions, followed by Brand associations, Brand Awareness, Brand Loyalty, and finally Brand image.

The study confirmed all the hypothesis put forward in Chapter 2.

5.5 Contributions and Recommendations

A core section of research is in understanding how the results of the study can be used to benefit users.

The results of the study have implications that need to be taken into consideration, for both academia as well as for Industry.

Literature review revealed that there is little known about male cosmetic in South African, and for academics this study will make a significant contribution to the body of work Brand Management and Brand Equity especially in the South African context. The variables studied were all positive and noteworthy. The author has illustrated strong relationships exist amongst brand equity and brand awareness, brand association, brand loyalty and perceived quality.

For the Marketing industry, the results will be beneficial for South African Marketers when they are building strategies for cosmetic products and developing strong brand equity for brand. The results show in chronological order, the most important elements that should be used when building brand equity for cosmetic products. The results of this study will assist Marketing practitioners to know which element will be more influential when building marketing strategies, and thus determine the budget allocation that should be used.

Furthermore, the results suggest that to have an effective on brand equity, marketing practitioners should allocate the most budget, focus and time to "brand awareness, brand association and brand loyalty" because they are the elements with the most influence on consumers. Undoubtedly the study will benefit Marketing practitioners by guiding them on how to structure Marketing messages. The study suggests that when crafting Marketing communication messages, greater emphasis should be placed on awareness, association and loyalty as they are the variables with the most impact on Brand equity of cosmetic products.

5.6 LIMITATIONS AND FUTURE RESEARCH

The study was conducted using 4 elements of brand equity namely: brand association, brand awareness, brand loyalty and perceived quality (Severi & Ling, 2013). The opportunity to further explore other brand equity components exists in future research.

The study can be replicated in a different geographical area by spreading the study to other countries and or focussing on specific provinces within South Africa.

The study is limited to specific brands across limited cosmetic categories; the opportunity here lies in expanding the study to other cosmetic categories and expanding the brands or to other industries other than the cosmetic industry e.g. Electronics, clothing apparel etc.

Social Media is a fast evolving platform and this study has not incorporated social media is Studies focussing on other social media platforms such as Facebook, Instagram Twitter, YouTube, Myspace, and LinkedIn etc. can be undertaken.

Appendix A

Questionnaire

Thank you for paying attention to this Masters research questionnaire on behalf of Wits Business School. The purpose of the study is to examine brand awareness, brand association, brand loyalty, perceived quality and how they influence repurchase intention of *males in the cosmetic industry*. I am therefore, requesting your assistance to complete the questionnaire below. The research is purely for academic purposes and the information obtained will be kept confidential. It will take you approximately 5 minutes to complete the whole questionnaire.

Supervisor: Professor Richard Chinomona

SECTION A

GENERAL INFORMATION

The section is asking your background information. Please indicate your answer by ticking (✓) on the appropriate box.

A1 Please indicate your gender

Male	1
Female	2
Other	3

A2 Please indicate your ethnic group

African	1
White	2
Asian	3
Coloured	4
Other	5

A3 Please indicate your age group

18 – 24 years old	1
25 - 34 years old	2
35 - 39 years old	3
40 – 44 years old	4
45 – 49 years old	5
Above 49 years old	6

A4 Please indicate how long you have used your brand of choice

Less than 1 year	1
1 to 4 years	2
5 to 8 years	3
9 to12 years	4

13 years and above	5

A5 Please indicate your monthly spend on your brand of choice

R50- R100	1
R110- R280	2
R290- R370	3
R380- R 500	4
Over R500	5

A6 Please specify which group/ or groups of cosmetics do you use

Fragrances & Body sprays	1
Shaving preparations	2
Skin care products	3
Hair care products	4
Shower gels	5

A7 Please indicate your brand/brands of choice

Nivea For Men	1
Vaseline For Men	2
Dove For Men	3
Gillette	4
Clarins	5
Kheils	6
L’Oreal Men	7

Please proceed to section B

SECTION B

Brand Awareness

Below are statements about brand awareness. You can indicate the extent to which you agree or disagree with the statement by ticking the corresponding number in the 5 point scale below:

1= Strongly Disagree **2=** Disagree **3=** Somewhat Disagree **4=** Neutral **5=** Somewhat Agree **6=** Agree **7=** Strongly Disagree

1	2	3	4	5	6	7
Strongly Disagree	Disagree	Somewhat Disagree	Neutral	Somewhat Agree	Agree	Strongly Agree

Please tick only one number for each statement

BA1	Brand awareness is important for me when making repurchase decisions	Strongly Disagree	1	2	3	4	5	6	7	Strongly Agree
BA2	Brands are important when purchasing cosmetics	Strongly Disagree	1	2	3	4	5	6	7	Strongly Agree
BA3	Brands give me the confidence to repurchase my usual products	Strongly Disagree	1	2	3	4	5	6	7	Strongly Agree
BA4	I have knowledge of the brands I purchase and other brands	Strongly Disagree	1	2	3	4	5	6	7	Strongly Agree
BA5	I am aware that the brand differentiates the products that I use	Strongly Disagree	1	2	3	4	5	6	7	Strongly Agree
BA6	I am influenced via communications of brands when making a repurchase decision	Strongly Disagree	1	2	3	4	5	6	7	Strongly Agree

BA7	The brand conveys the benefits and value to me when repurchasing	Strongly Disagree	1	2	3	4	5	6	7	Strongly Agree
BA8	My brand gives me added value for the product I am buying	Strongly Disagree	1	2	3	4	5	6	7	Strongly Agree

SECTION C

Brand association

Below are statements about brand association. You may agree or disagree with each statement by ticking the appropriate number provided below where:

1= Strongly Disagree **2=** Disagree **3=** Somewhat Disagree **4=** Neutral **5=** Somewhat Agree **6=** Agree **7=** Strongly Disagree

1	2	3	4	5	6	7
Strongly Disagree	Disagree	Somewhat Disagree	Neutral	Somewhat Agree	Agree	Strongly Agree

Please tick only one number for each statement

BO1	I trust brands that I know off, from other categories other than cosmetics when repurchasing my cosmetics	Strongly Disagree	1	2	3	4	5	6	7	Strongly Agree
BO2	I associate with the brands that my friends or family use when repurchasing cosmetics	Strongly Disagree	1	2	3	4	5	6	7	Strongly Agree
BO3	I associate the brands I use with value for money when making a repurchasing decision	Strongly Disagree	1	2	3	4	5	6	7	Strongly Agree

BO4	I associate my cosmetic brand with being dedicated to making male only products	Strongly Disagree	1	2	3	4	5	6	7	Strongly Agree
BO5	My cosmetic brand is associated with providing results when making a repurchasing decision	Strongly Disagree	1	2	3	4	5	6	7	Strongly Agree

SECTION D

Brand loyalty

Below are statements about brand loyalty. You are required to indicate the extent to which you agree or disagree with the statements below by ticking the appropriate number where:

1= Strongly Disagree **2=** Disagree **3=** Somewhat Disagree **4=** Neutral **5=** Somewhat Agree **6=** Agree **7=** Strongly Disagree

1	2	3	4	5	6	7
Strongly Disagree	Disagree	Somewhat Disagree	Neutral	Somewhat Agree	Agree	Strongly Agree

Please tick only one number for each statement.

BL1	I am loyal to my cosmetic brand and when repurchasing my cosmetics I rarely switch	Strongly Disagree	1	2	3	4	5	6	7	Strongly Agree
BL2	If switching brands when repurchasing my cosmetics I will go on a recommendation	Strongly Disagree	1	2	3	4	5	6	7	Strongly Agree
BL3	I am loyal a specific brand when repurchasing my cosmetics because I trust the brand	Strongly Disagree	1	2	3	4	5	6	7	Strongly Agree
BL4	I use various brands of cosmetics and when repurchasing will commonly switch	Strongly Disagree	1	2	3	4	5	6	7	Strongly Agree

	between brands									
BL5	Repurchase decisions are based on my loyalty to the brand	Strongly Disagree	1	2	3	4	5	6	7	Strongly Agree

SECTION E

Perceived quality

Below are statements about perceived quality. You may agree or disagree with each statement by ticking the appropriate number provided where:

1= Strongly Disagree **2=** Disagree **3=** Somewhat Disagree **4=** Neutral **5=** Somewhat Agree **6=** Agree **7=** Strongly Disagree

1	2	3	4	5	6	7
Strongly Disagree	Disagree	Somewhat Disagree	Neutral	Somewhat Agree	Agree	Strongly Agree

Please tick only one number for each statement

PQ1	The perceived quality impacts my decision when repurchasing cosmetics	Strongly Disagree	1	2	3	4	5	6	7	Strongly Agree
PQ2	I base my perceptions around quality of my brands on facts when repurchasing my cosmetics	Strongly Disagree	1	2	3	4	5	6	7	Strongly Agree
PQ3	I base my perceptions around quality of my brands on WOM when repurchasing my cosmetics	Strongly Disagree	1	2	3	4	5	6	7	Strongly Agree

PQ4	The perceived quality of my brand is more important than loyalty when making a repurchasing decision	Strongly Disagree	1	2	3	4	5	6	7	Strongly Agree
PQ5	I have to have good perception of the overall brand to continue to purchase the products	Strongly Disagree	1	2	3	4	5	6	7	Strongly Agree

REFERENCES

Aaker, D. A. (1991a). *Managing brand equity*. New York: The Free Press.

Aaker, D. A. (1991b). *Managing brand equity: Capitalizing on the value of a brand name*. New York: The Free Press.

Aaker, D. A. (1992). The value of brand equity. *Journal of business strategy, 13*(4), 27-32.

Aaker, D. A. (1996a). *Building strong brands*. New York: The Free Press

Aaker, D. A. (1996b). *Managing brand equity: Capitalizing on the value of the brand name*. New York: The Free Press.

Aaker, D. A. (2002). *Building strong brands*, New York: Free Press..

Aaker, D. A., & Biel, A. L. (1993). *Brand equity and advertising: an overview*. Hillsdale, NJ: Lawrence Erlbaum Associates.

Aaker, D. A., & Jacobson, R. (1994). The financial information content of perceived quality. *Journal of Marketing Research*, 191-201.

Aaker, D. A., & Jacobson, R. (2001). The value relevance of brand attitude in high-technology markets. *Journal of Marketing Research, 38*(4), 485-493.

Aaker, D. A., & McLoughlin, D. (2010). *Strategic market management: global perspectives.* New York: John Wiley & Sons.

Ailawadi, K. L., Lehmann, D. R., & Neslin, S. A. (2003). Revenue premium as an outcome measure of brand equity. *Journal of Marketing, 67*(4), 1-17.

Anderson, J. C., and Gerbing, D. W. (1988). Structural equation modeling in practice: A review and recommended two-step approach. *Psychological bulletin*, *103*(3), 411-423.

Antila, M. (2013). A Constructivist Approach to the Historiography of Philosophy. *Procedia-Social and Behavioral Sciences, 71*, 36-44.

Atilgan, E., Aksoy, S., & Akinci, S. (2005). Determinants of the brand equity: a verification approach in the beverage industry in Turkey. *Marketing Intelligence & Planning, 23*(3), 237-248.

Ballantyne, R., Warren, A., & Nobbs, K. (2006). The evolution of brand choice. *The journal of brand management, 13*(4), 339-352.

Bandyopadhyay, S., & Martell, M. (2007). Does attitudinal loyalty influence behavioral loyalty? A theoretical and empirical study. *Journal of Retailing and Consumer Services, 14*(1), 35-44.

Bentler, P. M., and Bonett, D. G. (1980). Significance tests and goodness of fit in the analysis of covariance structures. *Psychological Bulletin, 88,* 588-606.

Berthon, P., Pitt, L., Parent, M., & Berthon, J. (2009). Aesthetics and ephemerality; observing and preserving the luxury brand. *California Management Review, 52*(1), 44-66.

Biel, A. L. (1993). Converting image into equity. *Brand equity and advertising: Advertising's role in building strong brands, 26*(10), 67-81.

Bitektine, A. (2007). Prospective case study design: qualitative method for deductive theory testing. *Organizational Research Methods*.

Blackburn, S. (1996). *Dictionary of philosophy*. Oxford: Oxford University Press.

Blanchin, A., Chareyron, C., & Levert, Q. (2007). *The customer behavior in the men's cosmetics market.* University of Halmstad., Sweden.

Bloemer, J., & Kasper, H. (1993). *Brand loyalty and brand satisfaction: the case of buying audio cassettes anew in The Netherlands.* Paper presented at the 22nd European Academy Conference, Barcelona.

Bristow, D. N., Schneider, K. C., & Schuler, D. K. (2002). The brand dependence scale: Measuring consumers' use of brand name to differentiate among product alternatives. *Journal of product & brand management, 11*(6), 343-356.

Brucks, M., Zeithaml, V. A., & Naylor, G. (2000). Price and brand name as indicators of quality dimensions for consumer durables. *Journal of the Academy of Marketing Science, 28*(3), 359-374.

Bryman, A. (2012). *Social research methods.* Oxford: Oxford University Press.

Bryman, A., & Bell, E. (2007). *Business research methods*. New York: Oxford University Press.

Bunson, M. (2002). Encyclopedia of Ancient Egypt. In F. O. F. Inc (Ed.), (2ND ed.).

Burns, A. C., & Bush, R. F. (2003). *Marketing research: Online research applications.* London: Prentice Hall.

Burton, D. B., Ryan, J. J., Axelrod, B. N., Schellenberger, T., & Richards, H. M. (2003). A confirmatory factor analysis of the WMS-III in a clinical sample with

crossvalidation in the standardization sample. *Archives of Clinical Neuropsychology*, *18*(6), 629-641.

Byrne, B. M. (1998). *Structural Equation Modeling with LISREL, PRELIS and SIMPLIS: Basic concepts, applications and programming.* Mahwah, New Jersey: Lawrence Erlbaum Associates.

Byrnes, N. (2006). Secrets of The Male Shopper. (cover story). *BusinessWeek*(3999), 44-54.

Chau, P. Y., & Tam, K. Y. (1997). Factors affecting the adoption of open systems: an exploratory study. *Mis Quarterly*, 1-24.

Chen, A. C.-H. (2001). Using free association to examine the relationship between the characteristics of brand associations and brand equity. *Journal of product & brand management, 10*(7), 439-451.

Christodoulides, G., & De Chernatony, L. (2010). Consumer-based brand equity conceptualization and measurement: A literature review. *International journal of research in marketing, 52*(1), 43-66.

Chinomona, R. (2011). *Non-mediated channel powers and relationship quality: A case of SMES in Zimbabwe channels of distribution* (pp. 1-175) Unpublished PhD. National Central University, Taiwan.

Cohen, L., & Manion, L. (2007). *Research methods in education*. London: Routledge.

Cohen, L., Manion, L., & Morrison, K. (2000). *Research methods in education*. London : Falmer.

Cole, R. E., & Flynn, M. S. (2009). Automotive quality reputation: Hard to achieve, hard to lose, still harder to win back. *California Management Review, 52*(1), 67-93.

Cormack, D. (2000). *The research process in nursing*. Oxford: Blackwell Publishing.

Creswell, J. (2009). *Research design: Qualitative, quantitative, and mixed methods approaches.* Thousand Oaks, CA.: Sage.

Dalgic, T. (2006). *Handbook of niche marketing: principles and practice.* London: Routledge.

Davies, G., & Chun, R. (2002). Gaps between the internal and external perceptions of the corporate brand. *Corporate Reputation Review, 5*(2-3), 144-158.

Deighton, J., Henderson, C. M., & Neslin, S. A. (1994). The effects of advertising on brand switching and repeat purchasing. *Journal of Marketing Research*, 28-43.

Dhanaraj, C., Lyles, M. A., Steensma, H. K., & Tihanyi, L. (2004). Managing tacit and explicit knowledge transfer in IJVs: the role of relational embeddedness and the impact on performance. *Journal of International Business Studies*, *35*(5), 428-442.

DiBartolo, M. C. (1998). Philosophy of science in doctoral nursing education revisited. *Journal of Professional Nursing, 14*(6), 350-360.

Dick, A. S., & Basu, K. (1994). Customer loyalty: toward an integrated conceptual framework. *Journal of the Academy of Marketing Science, 22*(2), 99-113.

Dobni, D., & Zinkhan, G. M. (1990). In search of brand image: a foundation analysis. *Advances in consumer research, 17*(1), 110-119.

Dodds, W. B., Monroe, K. B., & Grewal, D. J. (1991). Effects of Price, Brand and Store Information on Buyers' Product Evaluations. *Journal of Marketing Research, Vol. 28*, pp. 307-319. .

Duffy, M. E. (1985). Designing nursing research: the qualitative-quantitative debate. *Journal of Advanced Nursing, 10*(3), 225-232.

Dunn, S. C., Seaker, R. F. & Waller, M. A. 1994, Latent Variables in Business Logistics

Research: Scale Development and Validation. *Journal of Business Logistics*, *15*(2), 145-172.

Dyson, S., & Brown, B. (2005). *Social theory and applied health research.* New York: McGraw-Hill Education (UK).

Erdem, T., Swait, J., & Valenzuela, A. (2006). Brands as signals: a cross-country validation study. *Journal of Marketing, 70*(1), 34-49.

Erenkol, A. D., & Duygun, A. (2010). Customers perceived brand equity and a research on the customers of Bellona which is a Turkish furniture brand. *The Journal of American Academy of Business,, 16(1)*.

Ergin, E. A., Özdemir, H., & Parıltı, N. (2011). Brand Loyalty in the cosmetics industry: a field study on Turkish women's brand loyalty among cosmetics products. *Journal of Business & Economics Research (JBER), 3*(5).

Espejel, J., Fandos, C., & Flavián, C. (2007). The role of intrinsic and extrinsic quality attributes on consumer behaviour for traditional food products. *Managing Service Quality, 17*(6), 681-701.

Euromonitor. (2015). Mens Grooming in South Africa

Evans, M. J., Jamal, A., & Foxall, G. R. (2006). *Consumer behaviour*: New York: John Wiley & Sons.

Fagarasanu, M., & Kumar, S. (2002). Measurement instruments and data collection: a consideration of constructs and biases in ergonomics research. *International Journal of Industrial Ergonomics, 30*(6), 355-369.

Farquhar, P. H. (1989). Managing brand equity. *Marketing research, 1*(3), 24-33.

Fatoki, O. O., & Asah, F. (2011). The impact of firm and entrepreneurial characteristics on access to debt finance by SMEs in King Williams' Town, South Africa. *International Journal of Business and Management, 6*(8), p170.

Feng, J., & Yanru, H. (2013). Study on the relationships among customer satisfaction, brand loyalty and repurchase intention. *Journal of Theoretical and Applied Information Technology, 49*(1), 180-186.

Ferrell, O. C., & Hartline, M. (2012). *Marketing Strategy, Text and Cases.* Boston: Cengage Learning.

Fraering, M., and Minor, M. S. (2006). Sense of Community: An Exploratory Study of US Consumers of Financial Services, *International Journal of Bank Marketing 24*(5), 284-306.

Frankfort-Nachmias, C., & Nachmias, D. (1992). Research Methods in the Social Sciences,. *Pakistan Journal of Criminology*.

Fullerton, J. T. (1993). Evaluation of research studies. *Journal of nurse-midwifery, 38*(2), 121-125.

Gefen, D., Straub, D., & Boudreau, M. C. (2000). Structural equation modeling and regression: Guidelines for research practice. *Communications of the association for information systems*, *4*(1), 7.

Gensler, S., Dekimpe, M. G., & Skiera, B. (2007). Evaluating channel performance in multi-channel environments. *Journal of Retailing and Consumer Services, 14*(1), 17-23.

Gloria, L. (2008). Treating your skin organically. *Retail World, 61,* 32.

Gounaris, S., Dimitriadis, S., & Stathakopoulos, V. (2010). An examination of the effects of service quality and satisfaction on customers' behavioral intentions in e-shopping. *Journal of services marketing, 24*(2), 142-156.

Grafström, A. (2010). Entropy of unequal probability sampling designs. *Statistical Methodology, 7*(2), 84-97.

Grove, S. K., Burns, N., & Gray, J. (2012). *The practice of nursing research: Appraisal, synthesis, and generation of evidence*: Elsevier Health Sciences.

Guba, E. G., & Lincoln, Y. S. (1994). Competing paradigms in qualitative research. *Handbook of qualitative research, 2*(163-194).

Guo, X. (2011). Cosmetics consumption among young males in the greater helsinki region. *Journal of Advertising Research, 12*(1), 55-76.

Gürbüz, E. (2008). Retail store branding in Turkey: its effect on perceived quality, satisfaction and loyalty. *EuroMed Journal of Business, 3*(3), 286-304.

Guthrie, M. F., & Hye-Shin, K. (2009). The relationship between consumer involvement and brand perceptions of female cosmetic consumers. *Journal of Brand Management, 17*(2), 114-133.

Hair, J.F., Anderson, R.E, Tatham, R.L & Black, W.C. (1998) *Multivariate data analysis.* 5th edition. Upper Saddle River, New Jersey: Prentice Hall.

Hair, J.F., Anderson, R.E, Tatham, R.L. & Black, W.C. (2006) *Multivariate data analysis*, 6th edition, London: Prentice-Hall.

Hair, J. F., Money, A., Samouel, P., & Page, M. (2007). *Research methods for business*. New York: John Wiley & Sons

Hair Jr, J. F., Black, W. C., Babin, B. J., & Anderson, R. (2009). Multivariate data analysis: Upper Saddle River, New Jersey: Pearson Prentice Hall.

Hankinson, G., & Cowking, P. (1996). *The Reality of Global Brands: Cases and strategies for the successful management of international brands*. New York: McGraw-Hill.

Hanzaee, K. H., & Andervazh, L. (2012). The influence of brand loyalty on cosmetics purchase intention of Iranian female consumers. *Journal of Basic and Applied Scientific Research, 2*(5), 5389-5398.

Hardy, M. A., & Bryman, A. (2004). *Handbook of data analysis.* Thousand Oaks, CA.: Sage.

Heding, T., Knudtzen, C. F., & Bjerre, M. (2008). *Brand management: Research, theory and practice*. New York: Routledge.

Hellier, P. K., Geursen, G. M., Carr, R. A., & Rickard, J. A. (2003). Customer repurchase intention: a general structural equation model. *European journal of marketing, 37*(11/12), 1762-1800.

Henry, G. T. (1990). *Practical sampling: Applied social research methods series*. Thousand Oaks, CA: Sage.

Henwood, K. L., & Pidgeon, N. F. (1992). Qualitative research and psychological theorizing. *British journal of psychology, 83*(1), 97-111.

Hilgenkamp, H., & Shanteau, J. (2010). Functional Measurement Analysis of Brand Equity: Does Brand name affect Perceptions of Quality? . *Psicológica, 31*, 561-575.

Hislop, M. (2001). Dynamic Logic's Branding 101: An Overview of Branding and Brand Measurement for Online Marketers. *Dynamic Logic*.

Hollis, N., Farr, A., & Dyson, P. (1996). Understanding, measuring, and using brand equity. *Journal of Advertising Research, 36*(6), 9-21.

Hooper, D., Coughlan, J., and Mullen, M. (2008). Structural equation modeling: Guidelines for determining model fit. *Electronic Journal of Business Research Methods, 6*(1), 53-60.

Hungler, B., & Polit, D. (1999). *Nursing research principles and methods.* (5 Edition).

Hur, W.-M., Ahn, K.-H., & Kim, M. (2011). Building brand loyalty through managing brand community commitment. *Management Decision, 49*(7), 1194-1213.

Iglesias, M. P., & Guillén, M. J. Y. (2004). Perceived quality and price: their impact on the satisfaction of restaurant customers. *International Journal of Contemporary Hospitality Management, 16*(6), 373-379.

Iriondo, J. M., Albert, M. J., & Escudero, A. (2003). Structural equation modelling: an alternative for assessing causal relationships in threatened plant populations. *Biological conservation*, *113*(3), 367-377

Jacoby, J., & Kyner, D. B. (1973). Brand loyalty vs. repeat purchasing behavior. *Journal of Marketing Research*, 1-9.

Jensen, J. M., & Hansen, T. (2006). An empirical examination of brand loyalty. *Journal of product & brand management, 15*(7), 442-449.

Joachimsthaler, E., & Aaker, A. (2000). *Brand leadership*. New York.

Jöreskog, K. G., & Sörbom, D. (1993). *LISREL 8: Structural equation modeling with the SIMPLIS command language*. Scientific Software International.

John, D. R., Loken, B., Kim, K., & Monga, A. B. (2006). Brand concept maps: a methodology for identifying brand association networks. *Journal of Marketing Research, 43*(4), 549-563.

Johnston, R. J. (1986). *Philosophy and human geography: an introduction to contemporary approaches.*

Kapferer, J. (2008). *The new strategic brand management*. London UK: Kogan Page.

Kapferer, J. (2012). Abundant rarity: The key to luxury growth. *Business horizons, 55,* 453-462.

Keller, K. L. (1993a). Brand Synthesis: The Multidimensionality Brand Knowledge. *Journal of Consumer Research, 29*.

Keller, K. L. (1993b). Conceptualizing, measuring, and managing customer-based brand equity. *The Journal of Marketing, 57*, 1-22.

Keller, K. L. (1998). *Strategic brand management: Building, measuring and managing brand equity*. London: : Prentice Hall International.

Keller, K. L. (2001). Building customer-based brand equity. *Marketing management, 10*(2), 14-21.

Keller, K. L. (2003a). Brand Synthesis: The Multidimensionality of Brand Knowledge. *Journal of Consumer Research, 29*(4), 595-600.

Keller, K. L. (2003b). *Strategic brand management: building, measuring, and managing brand equity* (2nd ed.). Upper Saddle River, N.J.: Prentice Hall.

Keller, K. L., Aperia, T., & Georgson, M. (2008). *Strategic Brand Management*, A European Edition London: Prentice Hall..

Keller, K. L., Parameswaran, M., & Jacob, I. (2011). *Strategic brand management: Building, measuring, and managing brand equity.* New Delhi: Pearson Education India.

Khan, N., Rahmani, S. H. R., Hoe, H. Y., & Chen, T. B. (2014). Causal Relationships among Dimensions of Consumer-Based Brand Equity and Purchase Intention: Fashion Industry. *International Journal of Business and Management, 10*(1), p172.

Kharim, H. S. (2011). The influence of Brand Loyalty on Cosmetic Buying behaviour of UAE female cosnumers. *Interbational Journal of Marketing Studies, 3*(2), 123-133.

Khraim, H. S. (2011). The influence of brand loyalty on cosmetics buying behavior of UAE female consumers. *International Journal of Marketing Studies, 3*(2), p123.

Kim, K. H., Kim, K. S., Kim, D. Y., Kim, J. H., & Kang, S. H. (2008). Brand equity in hospital marketing. *Journal of Business Research, 61*(1), 75-82.

Klauer, K. J., & Phye, G. D. (2008). Inductive reasoning: A training approach. *Review of educational research, 78*(1), 85-123.

Klein, E. A., & Meyskens, F. L. (2001). Potential target populations and clinical models for testing chemopreventive agents. *Urology, 57*(4), 171-173.

Kline, T. J., & Klammer, J. D. (2001). Path model analyzed with ordinary least squares multiple regression versus LISREL. *The Journal of Psychology*, *135*(2), 213-225.

Kneale, J., & Santy, J. (1999). Critiquing qualitative research. *Journal of Orthopaedic Nursing, 3*(1), 24-32.

Kotler, P. (2000). *Marketing Management* (10th ed.). Upper Saddle River, NJ.: Prentice Hall.

Kotler, P. & Keller. KL (2006). *Marketing management*. Upper Saddle Rivr, NJ: Prentice Hall.

Kunene, T. R. (2008). *A critical analysis of entrepreneurial and business skills in SMEs in the textile and clothing industry in Johannesburg, South Africa.* University of Pretoria.

Lam, S. K., Ahearne, M., Hu, Y., & Schillewaert, N. (2010). Resistance to brand switching when a radically new brand is introduced: A social identity theory perspective. *Journal of Marketing, 74*(6), 128-146.

Lassar, W., Mittal, B., & Sharma, A. (1995). Measuring customer-based brand equity. *Journal of Consumer Marketing, 12*(4), 11-19.

Lazerwitz, B. (1968). Sampling theory and procedures. *Methodology in social research*, 278-328.

Lee, H.-M., Lee, C.-C., & Wu, C.-C. (2011). Brand image strategy affects brand equity after M&A. *European journal of marketing, 45*(7/8), 1091-1111.

Lee, V., & Lo, A. (2014). From theory to practice: Teaching management using films through deductive and inductive processes. *The International Journal of Management Education, 12*(1), 44-54.

Lethbridge, T. C., Sim, S. E., & Singer, J. (2005). Studying software engineers: Data collection techniques for software field studies. *Empirical software engineering, 10*(3), 311-341.

Lin, S. (2006). The impact of warranty and brand awareness on customer loyalty. *Chinese Management Review, 8*(1), 1-20.

Lincoln, Y. S., & Denzin, N. K. (2000). The seventh moment: Out of the past. *Handbook of qualitative research, 2*, 1047-1065.

Lincoln, Y. S., & Guba, E. G. (1985). *Naturalistic inquiry* (Vol. 75) Thousand Oaks, CA.: Sage.

Macdonald, E. K., & Sharp, B. M. (2000). Brand Awareness Effects on Consumer Decision Making for a Common, Repeat Purchase Product:: A Replication. *Journal of Business Research, 48*(1), 5-15.

Malaeb, Z. A., Summers, J. K., & Pugesek, B. H. (2000). Using structural equation modeling to investigate relationships among ecological variables. *Environmental and Ecological Statistics*, *7*(1), 93-111.

Masayavanij, P. (2007). *An Investigation into How Consumer Perceive Domestic Brands and Global Brands: Thai Footwear (Trainer) Industry.* University of Nottingham.

McNeill, L. S., & Douglas, K. (2011). Retailing masculinity: Gender expectations and social image of male grooming products in New Zealand. *Journal of Retailing and Consumer Services, 18*(5), 448-454.

Mittal, V., Ross Jr, W. T., & Baldasare, P. M. (1998). The asymmetric impact of negative and positive attribute-level performance on overall satisfaction and repurchase intentions. *The Journal of Marketing*, 33-47.

McLeod, R., & Schell, G. (2001). Management Information Systems 8/e. *Chapter-17" Marketing Information System" published in*.

Morrison, K. (1993). *Planning and accomplishing school-centred evaluation*: Peter Francis.

Motameni, R., & Shahrokhi, M. (1998). Brand equity valuation: a global perspective. *Journal of product & brand management, 7*(4), 275-290.

Mowen, J. C., & Michael, S. (2001). *Consumr Behavior: A Framework*. Upper Saddle River, New Jersey: Prentice-Hall.

Napoli, J., Dickinson, S. J., Beverland, M. B., & Farrelly, F. (2014). Measuring consumer-based brand authenticity. *Journal of Business Research, 67*(6), 1090-1098.

Nunnally, J. C. and Bernstein, I. (1994). *Psychometric theory*, 3rd edition. New

York: McGraw-Hill.

Nunnally, J.C. (1967). *Psychometric theory.* New York: McGraw-Hill.

Nusair, K., and Hua, N. (2010). Comparative assessment of structural equation modeling and multiple regression research methodologies: E-commerce context. *Tourism Management*, *31*(3), 314-324.

Netemeyer, R. G., Krishnan, B., Pullig, C., Wang, G., Yagci, M., Dean, D., . . . Wirth, F. (2004). Developing and validating measures of facets of customer-based brand equity. *Journal of Business Research, 57*(2), 209-224. O'guinn, T., Allen, C., Semenik, R., & Scheinbaum, A. C. (2014). *Advertising and integrated brand promotion.* Boston: Cengage Learning.

Oliver R. L. (1997). *Satisfaction: A behavioral perspective on the consumer*. New York: Irwin-McGraw-Hill.

Palys, T. S. (2003). *Research decisions: Quantitative and qualitative perspectives*: Scarborough, Ont.: Thomson Nelson.

Pappu, R., Quester, P. G., & Cooksey, R. W. (2007). Country image and consumer-based brand equity: relationships and implications for international marketing. *Journal of International Business Studies, 38*(5), 726-745.

Pedhazur, E. J., & Schmelkin, L. P. (2013). *Measurement, design, and analysis: An integrated approach.* New York: Psychology Press.

Percy, L., & Rossiter, J. R. (1992). A model of brand awareness and brand attitude advertising strategies. *Psychology & Marketing, 9*(4), 263-274.

Perry. (2010). A Cosmetic Industry Overview for Cosmetic Chemist. Retrieved 1 November, 2014, from http:/chemistcorner.com/a-cosmetic-market-overview-for-cosmetic-chemist/

Persson, J. (2010). Misconceptions of positivism and five unnecessary science theoretic mistakes they bring in their train. *International journal of nursing studies, 47*(5), 651-661.

Petty, N. J., Thomson, O. P., & Stew, G. (2012a). Ready for a paradigm shift? Part 1: Introducing the philosophy of qualitative research. *Manual therapy, 17*(4), 267-274.

Petty, N. J., Thomson, O. P., & Stew, G. (2012b). Ready for a paradigm shift? Part 2: Introducing qualitative research methodologies and methods. *Manual therapy, 17*(5), 378-384.

Polit, D., & Beck, C. (2012). Essentials of nursing research. *Ethics, 23*(2).

Polkinghorne, D. E. (2005). Language and meaning: Data collection in qualitative research. *Journal of counseling psychology, 52*(2), 137.

Pons-Guiraud, A., & Vigan, M. (2004). Allergies and Cosmetics. In P. E. S. Francaise (Ed.). Paris: The UCB Insititute of Allergy, Ed.

Potter, W. J. (1996). *An analysis of thinking and research about qualitative methods.* New York: Psychology Press.

Pride, W. M., & Ferrell, O. C. B. (2003). *Marketing: Concepts and strategies*. Boston: Boston, MA: Houghton Mifflin Company. .

Proctor, T. (2014). *Strategic marketing: an introduction.* London: Routledge.

Prus, A., & Brandt, D. R. (1995). Understanding your customers. *Marketing Tools, 2*(5), 10-14.

Qureshi, S. M., & Kang, C. (2015). Analysing the organizational factors of project complexity using structural equation modelling. *International Journal of Project Management, 33*(1), 165-176.

Ramos, M. C. (1987). Adopting an evolutionary lens: An optimistic approach to discovering strength in nursing. *Advances in Nursing Science, 10*(1), 19-26.

Randall, D., & Gibson, A. (1990). Methodology in business ethics research: A review and critical assessment. *Journal of Business Ethics, 9*(6), 457-471.

Randall, G. (2000). *Branding: A Practical Guide to Planning Your Srategy.* London: Kogan Page Limited.

Remler, P. (2010). *Eygptian Mythology A to Z* (3rd ed.). New York: Chelsea House Publishers.

Reynolds, H. (2003). *A fashionable historyof make-up and body decoration (A fashionabe history of costume)*. Chicago: Raintree.

Robson, C. (2011). *Real World Research: A resource for Users of Social Research Methods in applied setting*s 3rd Ed. London: John Wiley & Sons.

Santy, J., & Kreale, J. (1998). Critiquing quantitative research. *Journal of Orthopaedic Nursing, 2*(2), 77-83.

StatsSA. (2014). Quarterly Labour Force Survey (pp. 1-76). Pretoria, South Africa: The Department.

Sarstedt, M., Ringle, C. M., Smith, D., Reams, R., and Hair Jr, J. F. (2014). Partial least squares structural equation modeling (PLS-SEM): A useful tool for family business researchers. *Journal of Family Business Strategy*, *5*(1), 105-115.

Saunders, M. L., & Thornhill, P. (2007). Research Methods for Business Students. *Financial Times/Prentice Hall, Harlow*.

Schiffman, L. G., & Kanuk, L. L. (2000). *Consumer behavior*. Upper Saddle River, NJ: Prentice-Hall.

Scholtes, V. A., Terwee, C. B., & Poolman, R. W. (2011). What makes a measurement instrument valid and reliable? *Injury, 42*(3), 236-240.

Schumacker, R. E., & Lomax, R. G. (2004). *A beginner's guide to structural equation modeling.* New York: Psychology Press.

Seiders, K., Voss, G. B., Grewal, D., & Godfrey, A. L. (2005). Do satisfied customers buy more? Examining moderating influences in a retailing context. *Journal of Marketing, 69*(4), 26-43.

Shadish, W. R. (1995). Philosophy of science and the quantitative-qualitative debates: Thirteen common errors. *Evaluation and Program Planning, 18*(1), 63-75.

Simon, C. J., & Sullivan, M. W. (1993). The measurement and determinants of brand equity: a financial approach. *Marketing Science, 12*(1), 28-52.

Singh, A. K. (1986). *Tests, measurements and research methods in behavioural sciences.* New Delhi: Tata McGraw-Hill.

Solberg, C. A. (1997). A framework for Analysis of Strategy Development in Globalizing Markets *Journal of International Marketing, 5* (1), 9-30.

Souiden, N., & Diagne, M. (2009). Canadian and French men's consumption of cosmetics: a comparison of their attitudes and motivations. *Journal of Consumer Marketing, 26*(2), 97-109.

Srivastava, R. K., & Shocker, A. D. (1991). *Brand equity: a perspective on its meaning and measurement.* New York: Marketing Science Institute.

Stein, C. M., Morris, N. J., & Nock, N. L. (2012). Structural equation modeling *Statistical Human Genetics* (pp. 495-512) Berlin: Springer.

Sturrock, F., & Pioch, E. (1998). Making himself attractive: the growing consumption of grooming products. *Marketing Intelligence & Planning, 16*(5), 337-343.

Svanberg, E., & Maxén, J. (2014). Measuring a Brand's Value-A Qualitative study of Media Groups.

Tansey, O. (2007). Process tracing and elite interviewing: a case for non-probability sampling. *PS: Political Science & Politics, 40*(04), 765-772.

Tabachnick,. B.G., & Fidell, L.S. (2007). *Using Multivariate Statistics*. 5th edition. New York: Allyn and Bacon.

Thompson, C. J., & Hirschman, E. C. (1995). Understanding the Socialized Body: A Poststructuralist Analysis of Consumers' Self-Conceptions, Body Images, and Self-Care Practices. *Journal of Consumer Research, 22*(2), 139-153. Tourangeau, R., & Smith, T. W. (1996). Asking sensitive questions the impact of data collection mode, question format, and question context. *Public opinion quarterly, 60*(2), 275-304.

Tungate, M. (2008). *Branded male: marketing to men.* London: Kogan Page.

Ukpebor, P., Ipogah, B., Aronsson, B., & Svensson, M. (2008). A study to indicate the importance of consumer based-brand equity on consumer perception of brand (a case study of fast food restaurants. *Journal of Consumer Marketing, 18*(2), 811-825.

Ulfat, S., Muzaffar, A., & Shoaib, M. (2014). To Examine the Application and Practicality of Aakers' Brand Equity Model in Relation with Recurrent Purchases Decision for Imported Beauty Care products (A study of female customers' of Pakistan). *European Journal of Business and Management, 6*(11), 120-133.

Upshaw, L. B. (1995). *Building brand identity: A strategy for success in a hostile marketplace* (Vol. 1). New York: Wiley.

Usunier, J.-C., & Lee, J. (2005). *Marketing across cultures*. London: Pearson Education.

Van Osselaer, S. M. J., & Janiszewski, C. (2001). Two ways of learning brand association. . *Journal of Consumer Research, 28*, 202-223.

Vogt, W. (1999). *Dictonary of statistics and methodolgy*. Thousand Oaks, CA: Sage.

Wang, C., & Hwang, I. (2001). The Influence of Product Knowledge on the Amount of Merchandises Information Search on Internet. *Journal of Business Administration, 51*, 109-138.

Washington, S., Karlaftis, M. G., & Mannering, F. L. (2003). *Statistical and econometric techniques for transportation data analysis.* New York:CRC/Chapman & Hall Press.

Westerman, M. A. (2014). Examining arguments against quantitative research:"Case studies" illustrating the challenge of finding a sound philosophical basis for a human sciences approach to psychology. *New Ideas in Psychology, 32*, 42-58.

Wilson, N., & McClean, S. I. (1994). *Questionnaire design: a practical introduction*: University of Ulster Coleraine.

Yang, Z., Wang, X., & Su, C. (2006). A review of research methodologies in international business. *International Business Review, 15*(6), 601-617.

Yee, W. F., & Sidek, Y. (2008). Influence of brand loyalty on consumer sportswear. *International Journal of Economics and Management, 2*(2), 221-236.

Yoo, B., & Donthu, N. (2001). Developing and validating a multidimensional consumer-based brand equity scale. *Journal of Business Research, 52*(1), 1-14. Yoshikawa, H., Weisner, T. S., Kalil, A., & Way, N. (2008). Mixing qualitative and quantitative research in developmental science: uses and methodological choices. *Developmental Psychology, 44*(2), 344.

Zayer, L. T., & Neier, S. (2011). An exploration of men's brand relationships. *Qualitative Market Research: An International Journal, 14*(1), 83-104.

Zeithaml, V. (1988). Consumer perception of price, quality and the value: A mean-end and synthesis of evidence. *Journal of Marketing, 52*(2), 2-22.