

https://dspace.org/

Some aspects of radial flow between parallel disks

Higgins, Brian Gavin

2015-01-27
http://hdl.handle.net/10539/16780

Downloaded from a DSpace repository. https://dspace.org/

FIGURE 29

Decay of $\overline{u^2_{max}}$ along the radial co-ordinate.

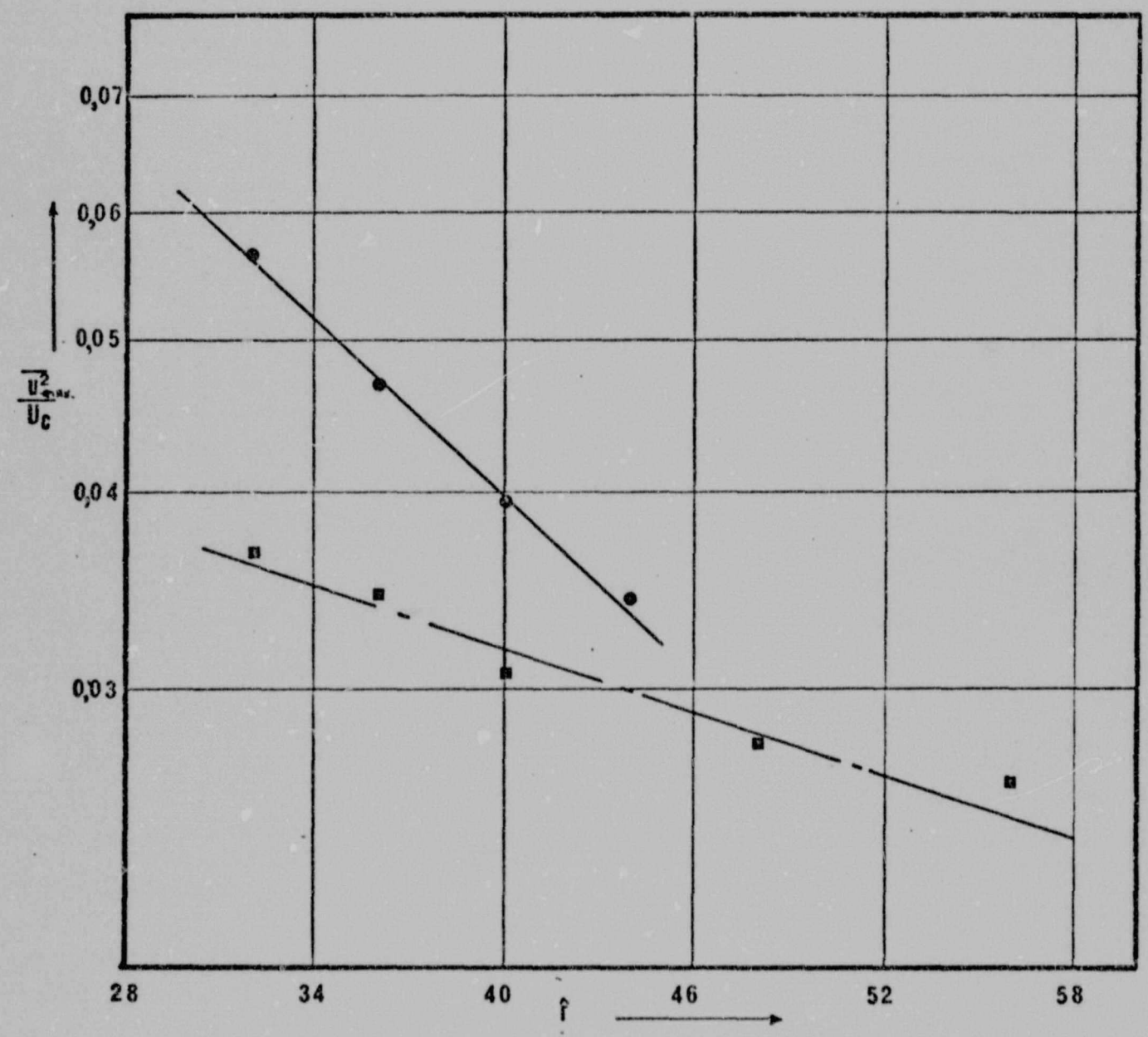

● Re = 8787

■ Re = 12341

Fig. 29

FIGURES 30-33

Spectral distributions of the longitudinal fluctuating component $\overline{u^2}$ for various Reynolds numbers.

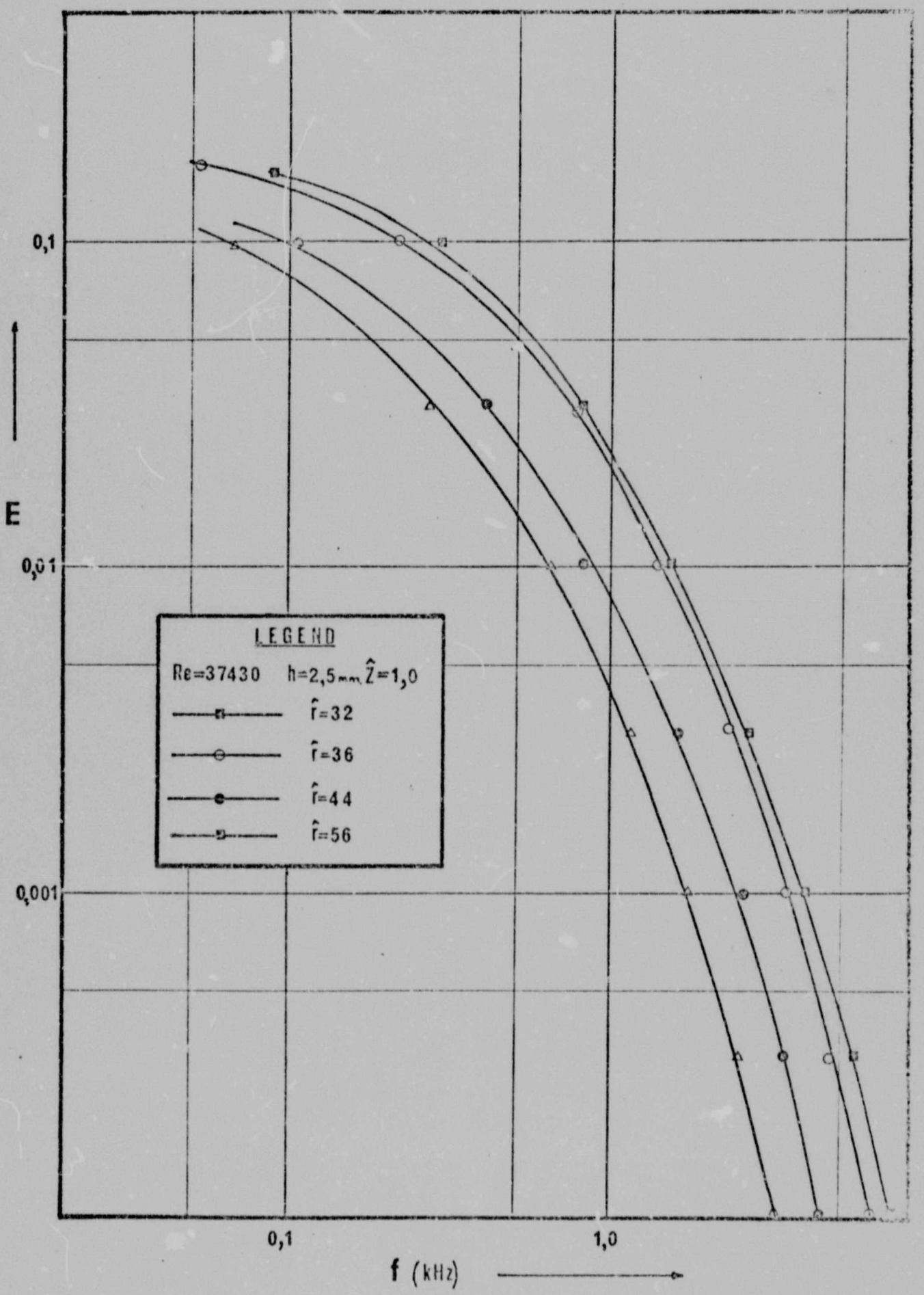
0,1
E
0,01
0,001
LEGEND
Re=37430 h=2,5mm Ẑ=1,0
r̂=32
r̂=36
r̂=44
r̂=56
0,1
1,0
f (kHz)

Fig. 30

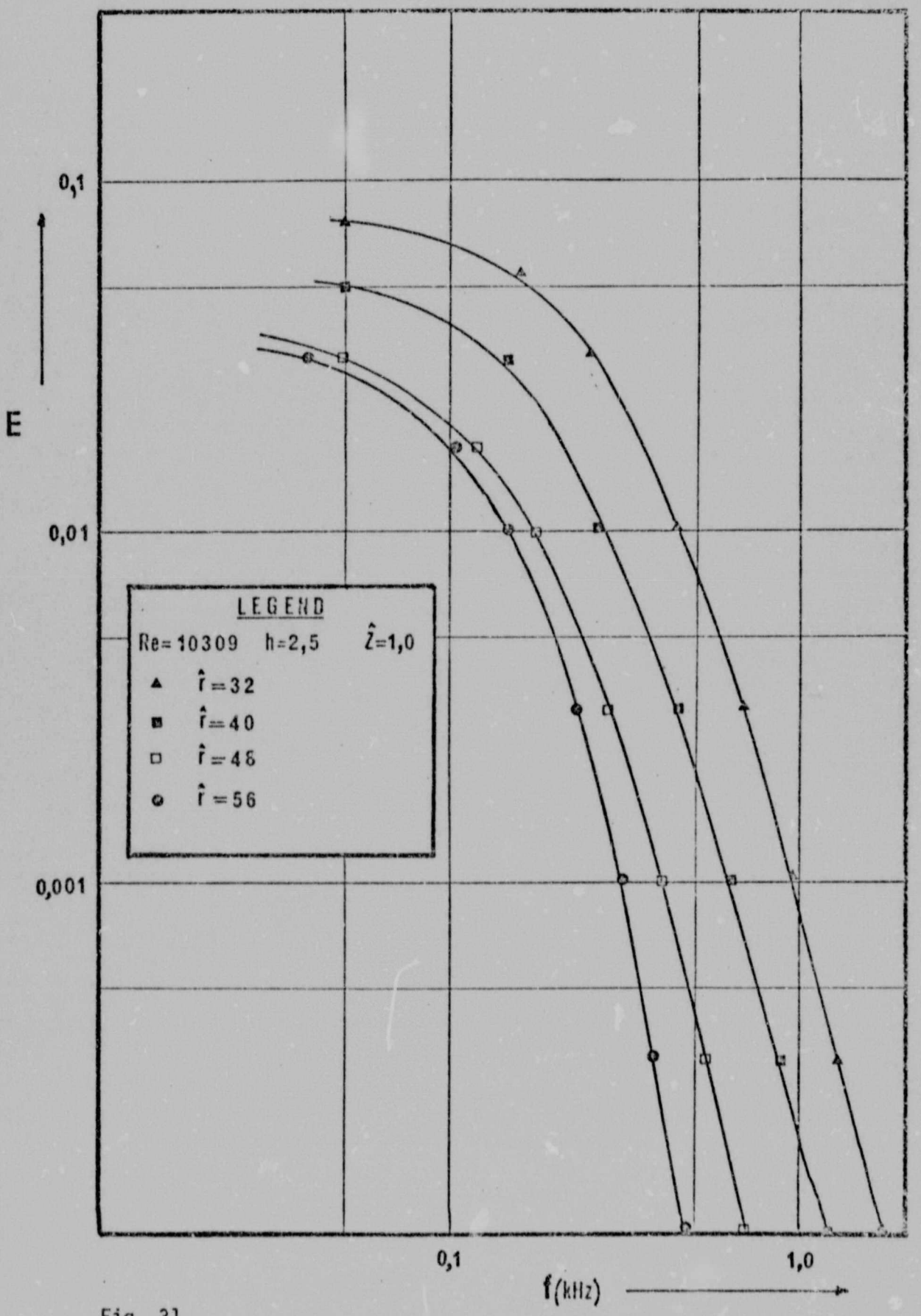

Fig. 31

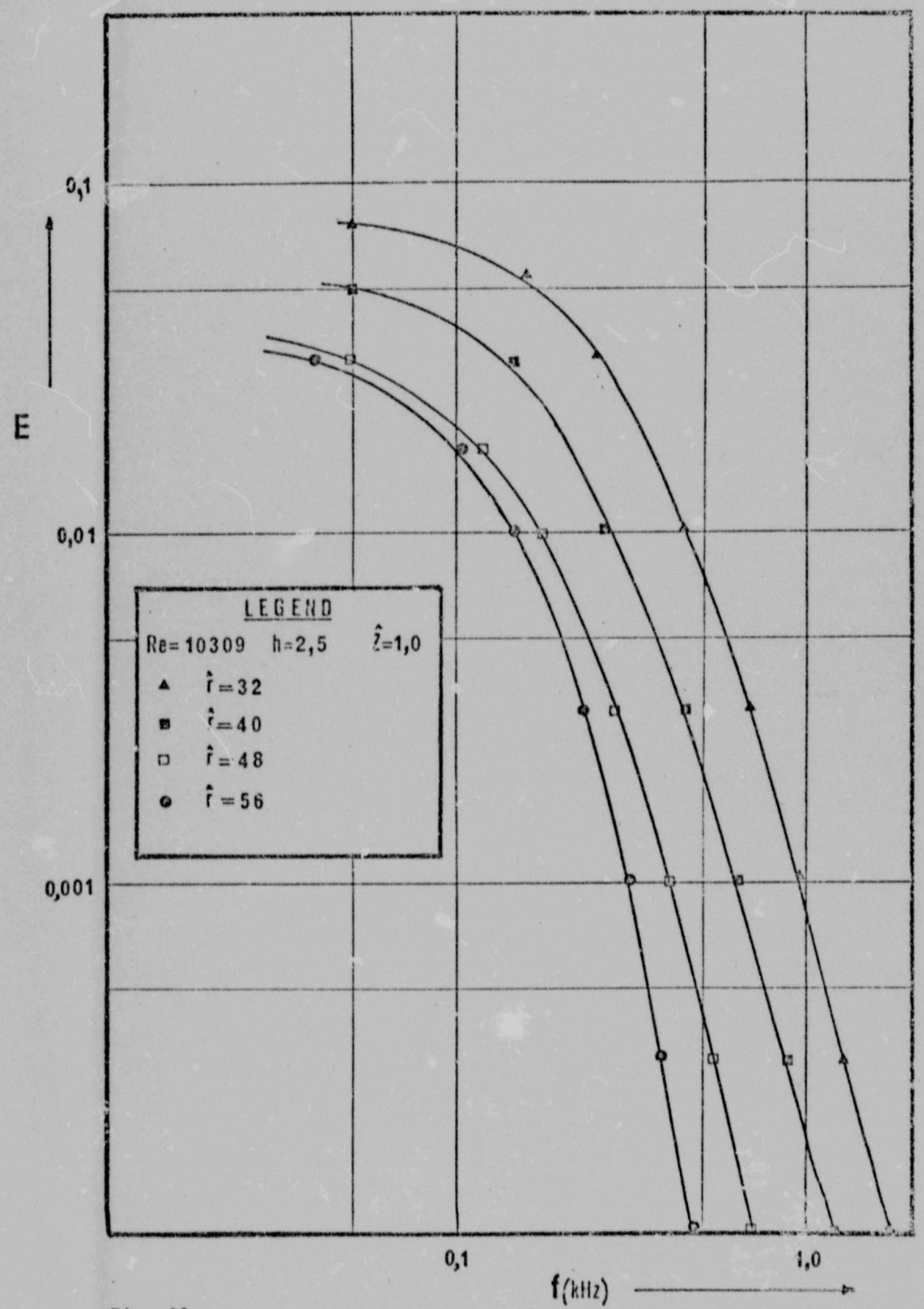
0,1
E
0,01
0,001
LEGEND
Re=10309 h=2,5 $\hat{z}$=1,0
$\hat{r}$=32
$\hat{r}$=40
$\hat{r}$=48
$\hat{r}$=56
0,1
1,0
f(kHz)

Fig. 31

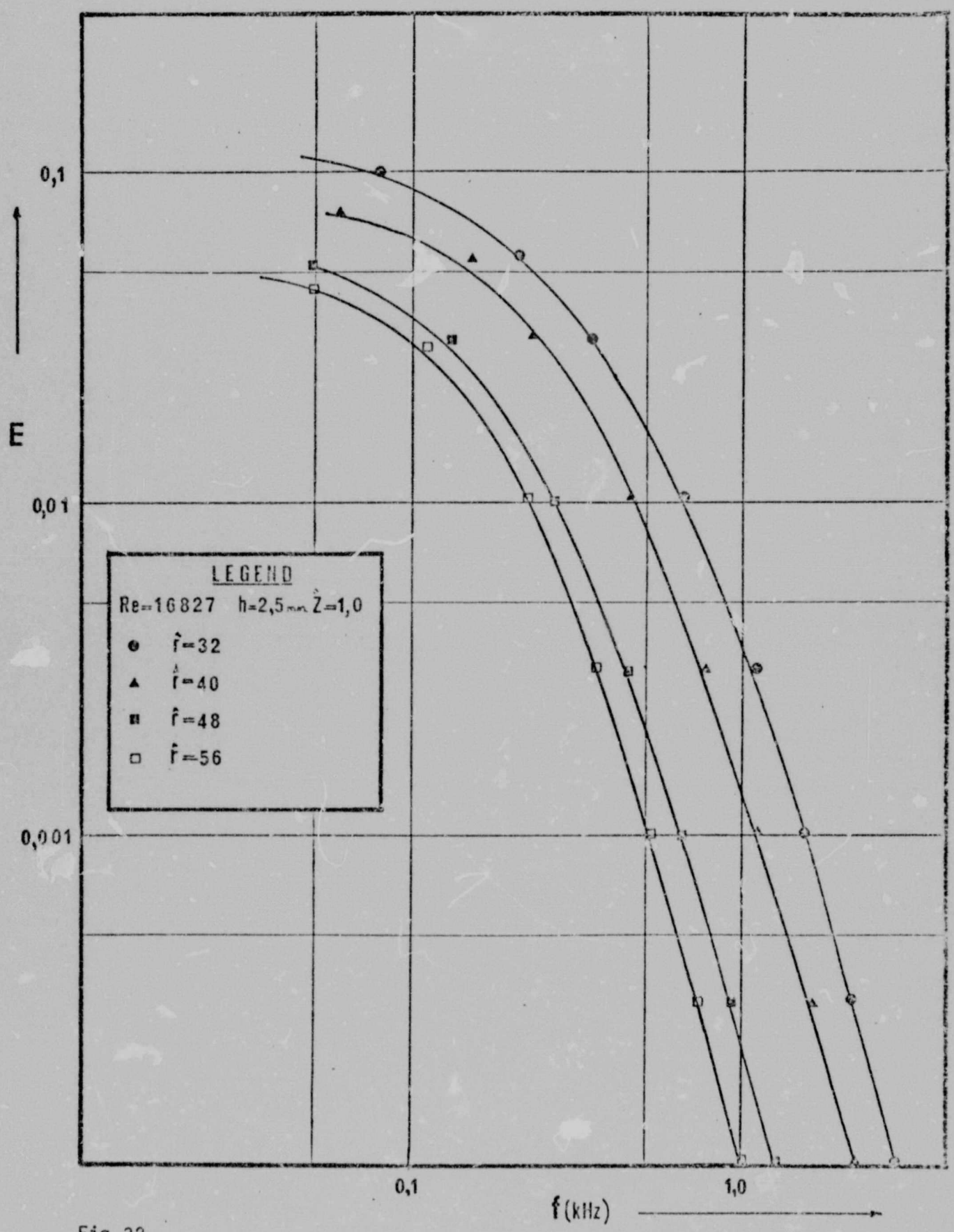
0,1
E
0,01
0,001
LEGEND
Re=16827 h=2,5mm Ẑ=1,0
f̂=32
f̂=40
f̂=48
f̂=56
0,1
1,0
f(kHz)

Fig.32

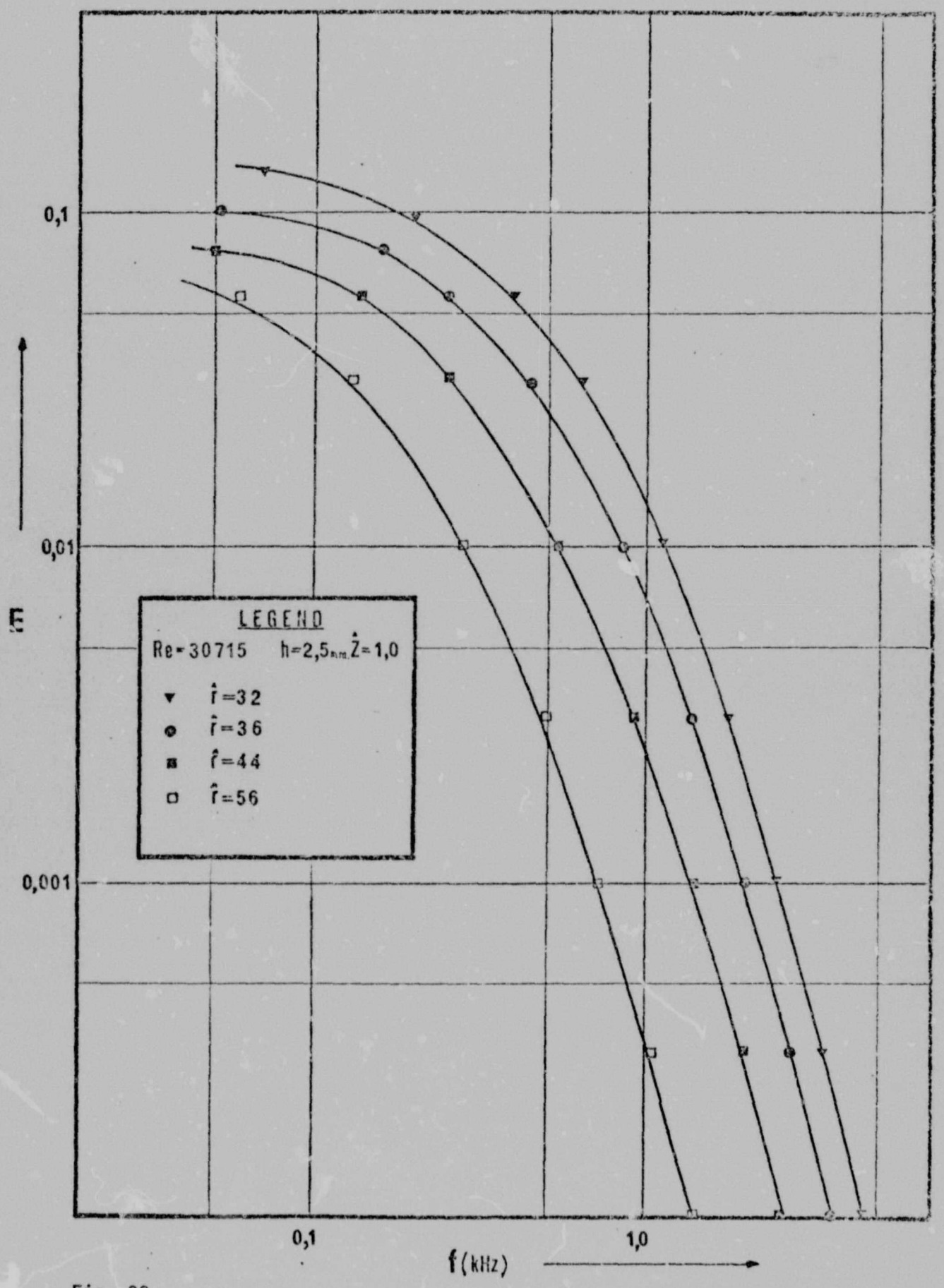
0,1
0,01
0,001
E
LEGEND
Re=30715 h=2,5mm Ż=1,0
ṙ=32
ṙ=36
ṙ=44
ṙ=56
0,1
1,0
f(kHz)

Fig 33

FIGURES 34-37

Non-dimensional spectral distributions of the longitudinal fluctuating component $\overline{u^2}$ for various Reynolds numbers.

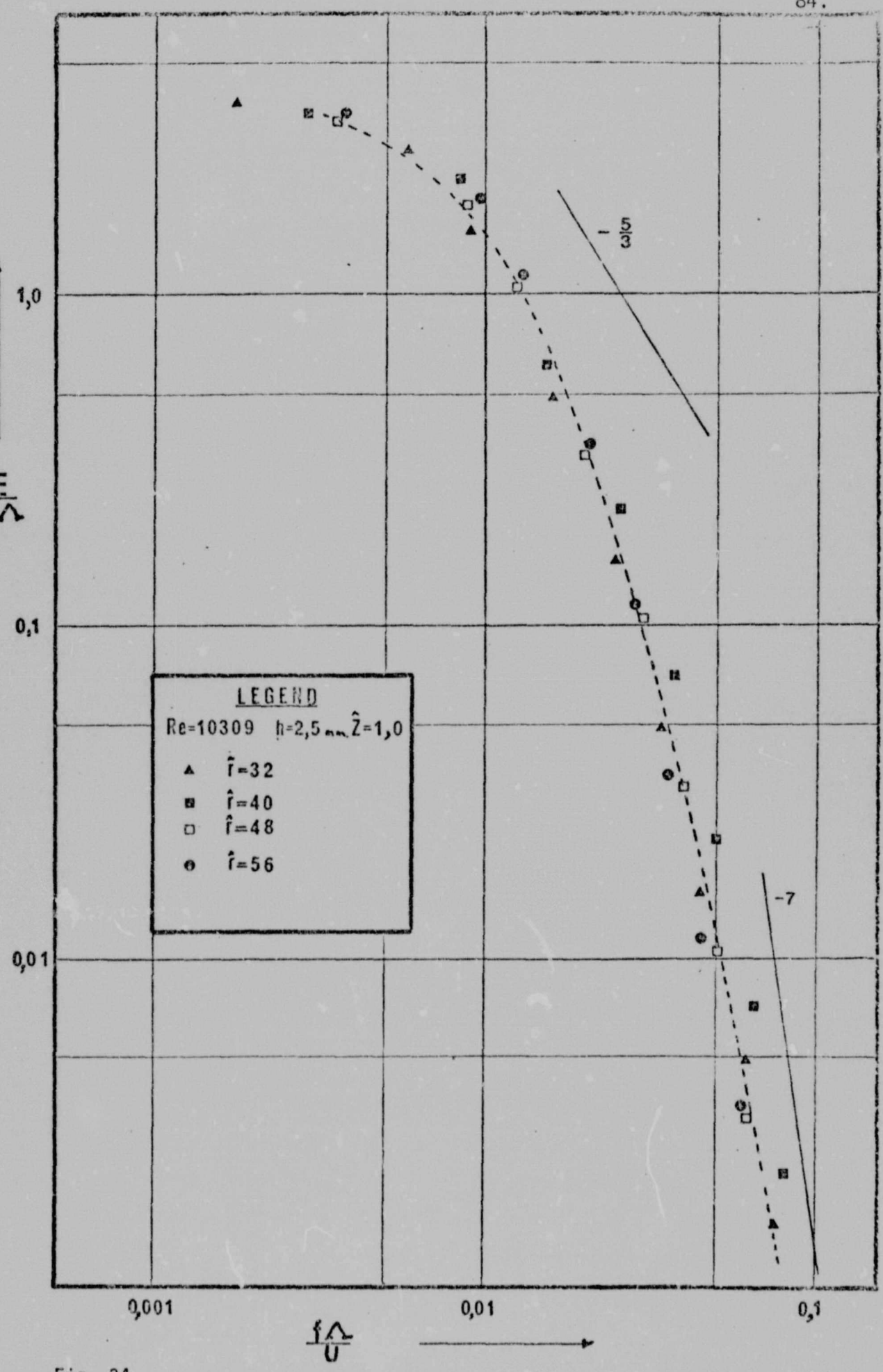
1,0
0,1
0,01
$\frac{uE}{\overline{u^2}\Lambda}$
-5/3
-7
LEGEND
Re=10309 h=2,5 mm $\hat{Z}$=1,0
$\hat{f}$=32
$\hat{f}$=40
$\hat{f}$=48
$\hat{f}$=56
0,001
0,01
0,1
$\frac{f\hat{\Lambda}}{U}$

Fig. 34

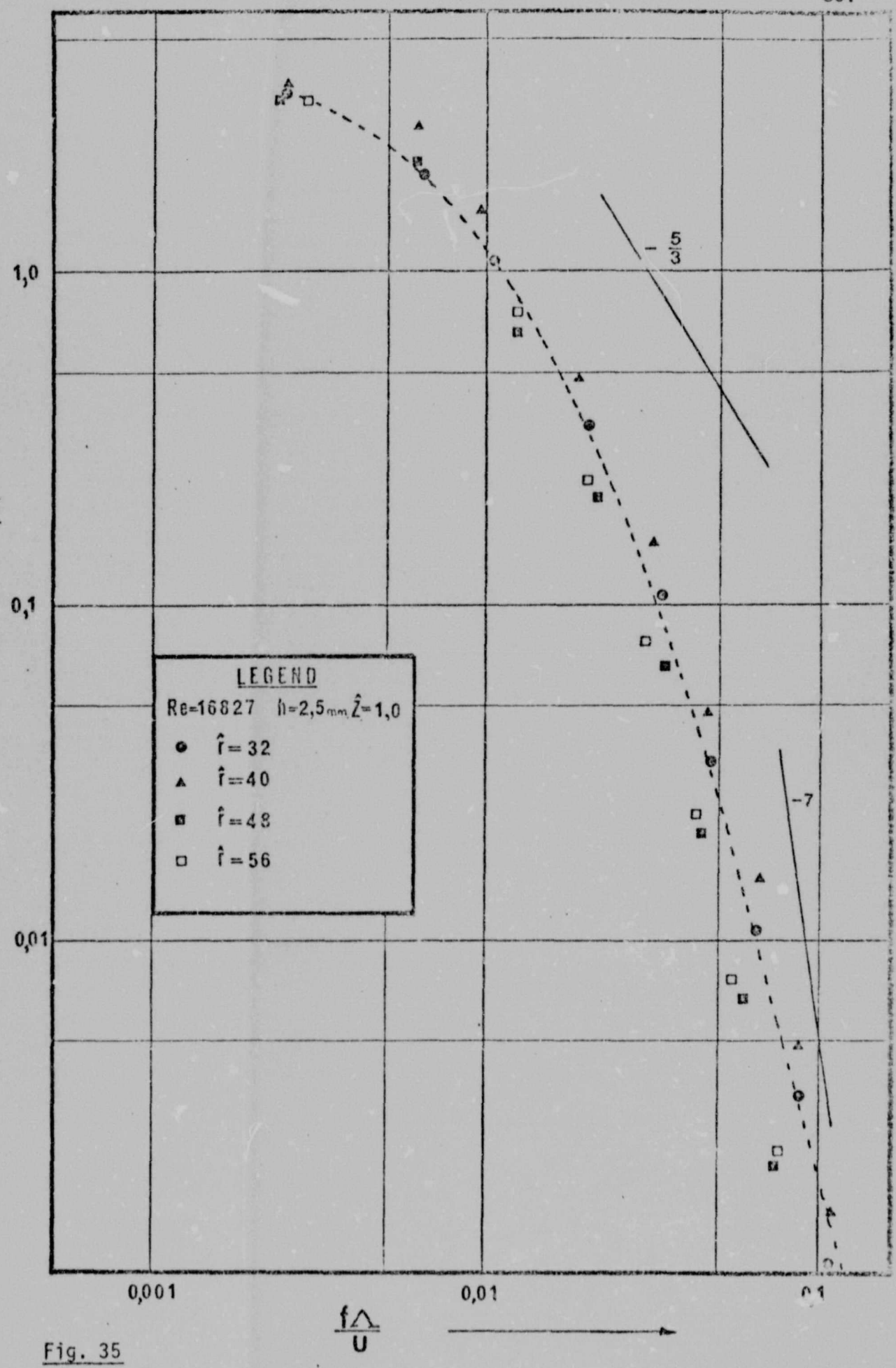
1,0
0,1
0,01
$\frac{uE}{\overline{u^2}\Lambda}$
LEGEND
Re=16827 h=2,5mm $\hat{Z}$=1,0
$\hat{f}$=32
$\hat{f}$=40
$\hat{f}$=48
$\hat{f}$=56
$-\frac{5}{3}$
-7
0,001
0,01
0,1
$\frac{f\Lambda}{U}$

Fig. 35

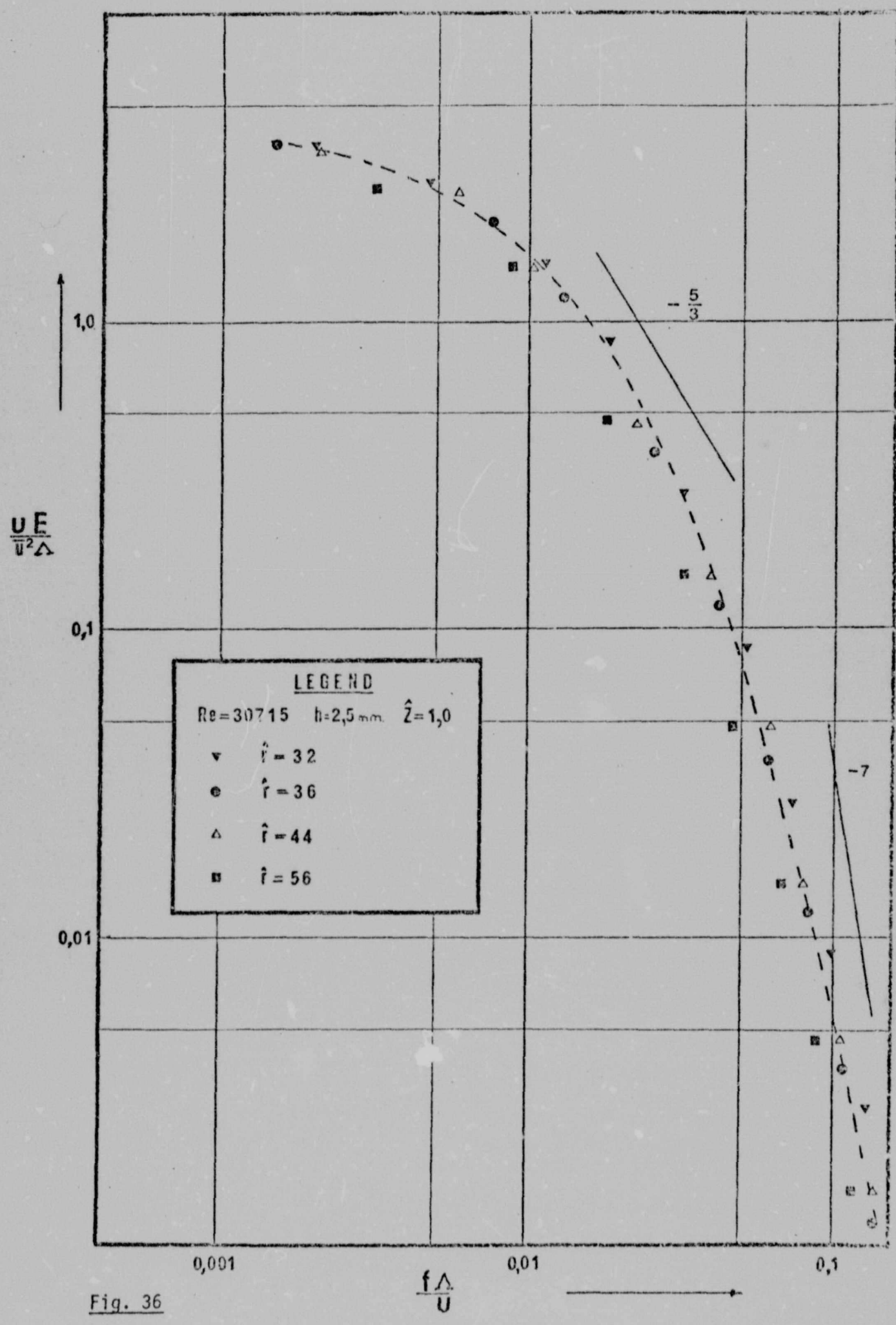
1,0
0,1
0,01
0,001
0,01
0,1
$\frac{U E}{\overline{U^2}\Lambda}$
$\frac{f\Lambda}{U}$
$-\frac{5}{3}$
-7
LEGEND
Re=30715 h=2,5 mm. $\hat{Z}$=1,0
$\hat{r}$ = 32
$\hat{r}$ = 36
$\hat{r}$ = 44
$\hat{r}$ = 56

Fig. 36

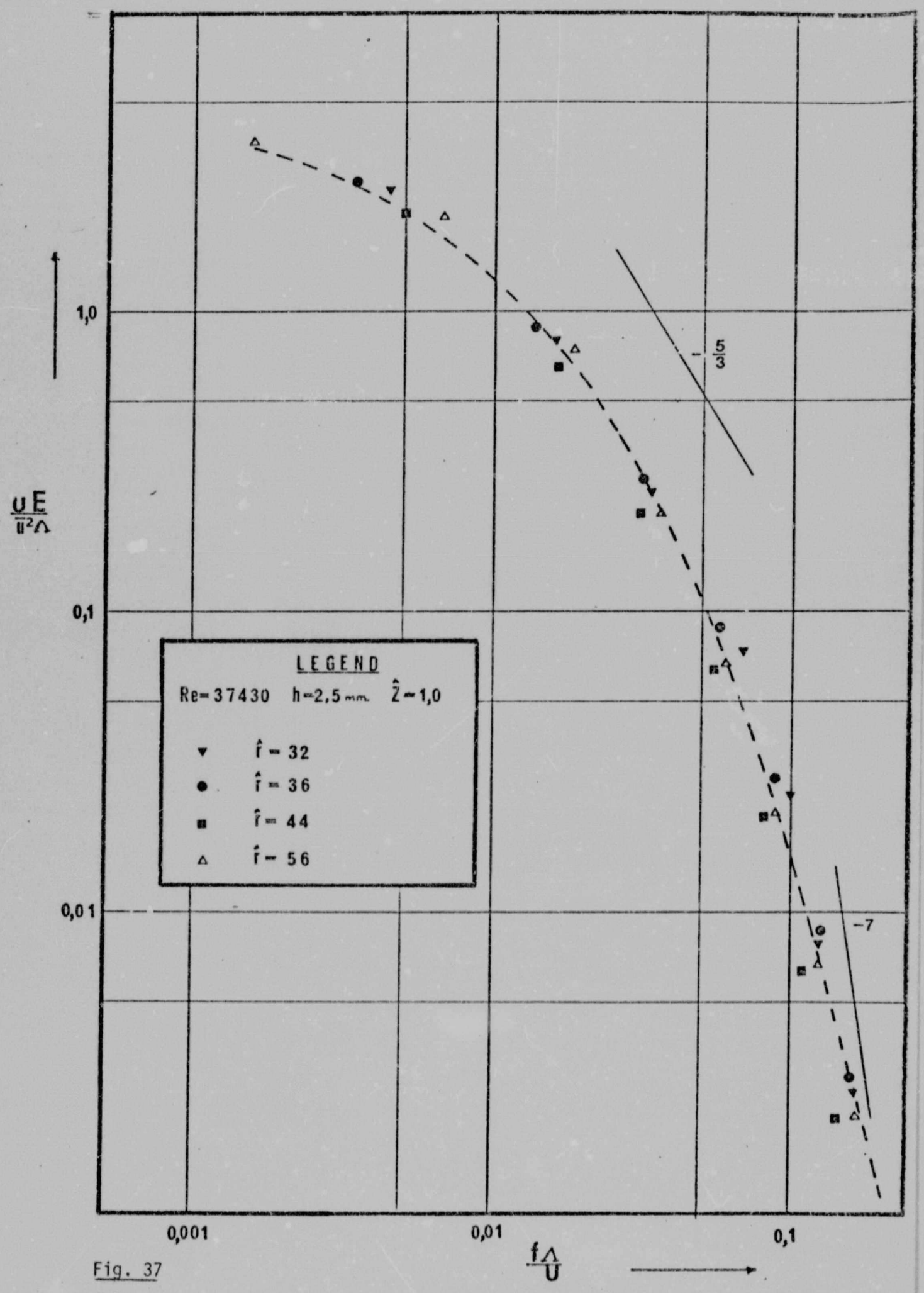
$\frac{UE}{\overline{u^2}\Lambda}$
1,0
0,1
0,01
0,001
0,01
0,1
$\frac{f\Lambda}{U}$
$-\frac{5}{3}$
-7
LEGEND
Re=37430 h=2,5 mm $\hat{Z}$=1,0
$\hat{f}$ = 32
$\hat{f}$ = 36
$\hat{f}$ = 44
$\hat{f}$ = 56

Fig. 37

4.5 CONCLUSIONS

The mechanism for reverse transition induced by decelerating the flow through some critical Reynolds number is similar whether it be pipe, channel or radial source flow. The process whereby a radial source flow becomes laminar may be summarised as follows:

a) The mean velocity profiles approach the laminar parabolic profile with increasing $\hat{r}$.

b) When the longitudinal turbulent fluctuations start to decay the maximum of the turbulent intensity profile moves towards the centre of the channel.

c) The decay of this maximum is exponential in character and the rate of decay is determined by the Reynolds number.

d) The spectral distributions of the longitudinal fluctuations are similar at various radial positions.

e) The longitudinal fluctuations only decay once the reduced Reynolds number is less than 8.

5. SUMMARY

The effect of the inertia terms on laminar radial source flow has been examined in detail. When the inertia terms are important the pressure increases in the radial direction causing an adverse pressure gradient to be imposed on the flow. If the adverse pressure gradient is sufficiently large, flow separation occurs and a separation bubble is formed on both the top and bottom disks. Starting with a uniform profile at a radial distance equal to half the gap width, separation occurs when $Re \geq 60$. The separation point was found to be regular and moved upstream when the Reynolds number was increased, while the reattachment point moved downstream.

The unfavourable pressure gradient causes an inflexion in the velocity profile which is then unstable to small perturbations and subsequently causes a transition from laminar to turbulent flow. As the flow moves radially outwards the adverse pressure gradient decreases and when $Re \leq 8$, the longitudinal fluctuations start to decay, the decay rate being dependent on the Reynolds number. This decay process was found to be very similar to the decay of turbulent quantities in pipe or channel flow during reverse transition.

6. SUGGESTIONS FOR FURTHER WORK

A solution to the second order inviscid flow problem has not yet been found and its solution should give valuable insight into how the downstream expansion proceeds for higher orders. A numerical solution of the full Navier-Stokes equations would be helpful in checking the theory as well as the accuracy of using a boundary layer equation in a region of reverse flow.

Because the gap width has to be extremely small to avoid flow separation, the possibility of measuring turbulent shear stress distributions as well as the transverse fluctuations with a hot-wire anemometer is slight. It might therefore be fruitful to do the experiments using water as the fluid medium and to then measure the turbulent quantities of the flow with a laser anemometer with a very fine resolution. Once these quantities have been measured, i.e. the turbulent shear stress and other fluctuating components, an estimation of the turbulent energy equation can be attempted. This will enable one to determine if any type of equilibrium exists in the flow.

7. REFERENCES

BACKSTON, C.A. (1970), J. Heat Transfer 92, 569.

BADRI NARAYANAN, M.A. (1968), J. Fluid Mech. 31, 609.

BADRI NARAYANAN, M.A & RAMJEE, V. (1969), J. Fluid Mech. 35, 225.

BAKKE, E. (1969), Ph.D. Thesis, University of Colorado.

BAKKE, E., KREIDER, JF. & KREITH, F. (1973), J. Fluid Mech. 58, 209.

BAKKE, E. & KREITH, F. (1969), A.S.M.E. Paper, No. 69-HT-33.

BARR, G.A. (1931), A Monograph of Viscometry, Oxford University Press, 145.

BAYLEY, F.J. & OWEN, J.M. (1969), Aero. Quart. 20, 333.

BLACK, L.H., CUFFEL, R.F. & MASSIER, P.F. (1969), A.S.M.E. paper No. 69-HT-56.

BLACKWELDER, R.F. & KOVASZNAY, L.S.G. (1972),J. Fluid Mech. 53, 61.

BODOIA, J.R. & OSTERLE, T.F. (1961), Appl. Sci. Res. 10, 265.

BRADSHAW, P. (1969),J. Fluid Mech. 35, 387.

BROWN, S.N. & STEWARTSON, K. (1969), Annual Review of Fluid Mechanics, 1,45,Annual Reviews Inc., Palo Alto, Calif.

CATHEDRAL, D. & MANGLER, K.W. (1966), J. Fluid Mech. 26, 163.

CHANG, I. DEE. (1961), J. Math. Mech. 10, 811.

CHEN, C.P. & PEUBE, J.L. (1964), Compt. Rend. 258, 5353.

COLLIS, D.C. & WILLIAMS, M.J. (1959), J. Fluid Mech. 6, 357.

COMOLET, M.R. (1952), C.R. Acad. Sci., 235, 1366.

DAVIES, M. (1968), Inst. Sound and Vibration Res. Memo., No. 237.

ELSNER, J. & GUNDLACH, W.R. (1973), DISA Information No. 14, 21.

GARCIA, C.E. (1971), Heat and Fluid Flow, 1, 88.

GOLDSTEIN, S. (1948), Quart. J. Mech. Appl. Math. 1, 43.

GÖRTLER, H. (1948), Ing. Arch. 16, 173.

GÖRTLER, H. (1957), J. Math. Mech. 6, 1.

HAGIWARA, T. (1962), J.S.M.E. 5, 656.

HORNBECK, R.W. (1973), Numerical marching techniques for fluid flows with heat transfer, NASA. SP-297, 153.

HUNT, J.B. & TORBE, I. (1962), Int. J. Mech. Sci. 4, 503.

ISHIZAWA, S. (1965), J.S.M.E. 8, 353.

ISHIZAWA, S. (1966), J.S.M.E. 9, 86.

JACKSON, J.D. & SYMMONS, G.R. (1965a), Int. J. Mech. Sci. 7, 239.

JACKSON, J.D. & SYMMONS, G.R. (1965b), Appl. Sci. Res. 15, 59.

JANSEN, W. (1964), J. Basic Eng. 86, 750.

JONES, W.P. & LAUNDER, B.E. (1969), A.S.M.E. paper No. 69-HT-13.

JONES, W.P. & LAUNDER, B.E. (1972), J. Fluid Mech. 56, 337.

KAPITZA, P. (1938), Nature 141, 74.

KAPLUN, S. (1967), Fluid Mechanics and Singular Perturbations, 145, (Ed. P.A. LAGERSTROM, L.N. HOWARD & C. LUI), Academic Press.

KAWAGUCHU, T. (1971), J.S.M.E. 14, 355.

KIM, H.T., KLINE, S.J. & REYNOLDS, W.C. (1971), J. Fluid Mech. 50, 133.

KING, L.V. (1914), Phil. Trans. Royal Soc. A214, 373.

KJELLSTRÖM, B. & HEDBERG, S. (1970), DISA Information No. 9, 8.

KREITH, F. (1965), Phys. Fluids 8, 1189.

LAUFER, J. (1962), Grenzellaneem der Angewandten Mechanick, Ed. MANFRED SCHAFTER, Göttingen.

LAUNDER, B.E. & JONES, W.P. (1969a), J. Fluid Mech. 38, 817.

LAUNDER, B.E. & JONES, W.P. (1969b), A.S.M.E. paper No. 69-HT-12.

LIVESEY, J.L. (1960), [illegible]. J. Mech. Sci. 1, 84.

McGINN, J.H. (1955), Appl. Sci. Res. 5, 255.

MOLLER, P.S. (1963), Aero. Quart. 14, 163.

MOLLER, P.S. (1966a), J. Basic Eng. 88, 155.

MOLLER, P.S. (1966b), J. Basic Eng. 88, 147.

MORGAN, D.G. & SAUNDERS, A. (1960), Int. J. Mech. Sci. 2, 8.

MORRETI, P.H. & KAYS, W.M. (1965), Int. J. Heat Mass Trans. 8, 1187.

NARASIMHA, R. & SREENIVASAN, K.R. (1973), J. Fluid Mech. 61, 417.

PATEL, V.C. & HEAD, M.R. (1968), J. Fluid Mech. 34, 371.

PERRY, A.E. & MORRISON, G.L. (1971), J. Fluid Mech. 47, 765.

PEUBE, J.L. (1963), J. de Mechanique 2, 377.

SAVAGE, S.B. (1964), J. Appl. Mech. 31, 594.

SCHLICHTING, H. (1960), Boundary-Layer Theory, McGraw Hill.

SERGIENKO, A.A. & GRETSOV, V.K. (1959), RAE Trans. No. 827.

SIBULKIN, M. (1962), Phys. Fluids 5, 280.

STERNBERG, J. (1954), U.S. Army Bal. Res. Rep. No. 906.

STEWARTSON, K. (1958), Quart. J. Mech. Appl. Math. 11, 399.

VAN DYKE, M.D. (1962), J. Fluid Mech. 14, 161.

VAN DYKE, M.D. (1964), Perturbation Methods in Fluid Mechanics, Academic Press.

VAN DYKE, M.D. (1970), J. Fluid Mech. 44, 813.

WILLS, J.A.R. (1962), J. Fluid Mech. 12, 388.

WILSON, S.D.R. (1971), J. Fluid Mech. 46, 787.

WILSON, S.D.R. (1972), Appl. Sci. Res. 25, 349.

WOOLARD, H.W. (1957), J. Appl. Mech. 24, 9.

APPENDIX A

INCONSISTENCIES IN RADIAL LAMINAR FLOW

When the pressure forces balance the viscous forces, a solution to the Navier-Stokes equations can be obtained by postulating that the velocity profile is to be

$$u = f(z)/r \tag{A-1}$$

If this profile is substituted into the equations of motion and noting that the v-component is zero we obtain

$$f^2 + \nu r^2 f''' = \frac{r^3}{\rho}\frac{dp}{dr} \tag{A-2}$$

with boundary conditions

$$f(-h) = f(h) = 0 \tag{A-3}$$

Differentiating (A-2) w.r.t. z we obtain

$$2ff' + \nu r^2 f'''' = 0 \tag{A-4}$$

Now at the walls, $f(\pm h) = 0$ which implies that

$$f''(\pm h) = 0 \tag{A-5}$$

Then by Rolle's theorem there must exist at some point in the interior, ξ say, such that

$$f'(\xi) = 0 \tag{A-6}$$

therefore

$$f''(\xi) = 0 \tag{A-7}$$

This implies that

(a) $f'' = 0$ for all z (A-8)

or

(b) $f'' = \phi(z)$ (A-9)

If $f''' = 0$ for all z (A-4) becomes

$$2ff' = 0 \qquad \text{(A-10)}$$

i.e. f is a constant.

This solution cannot satisfy the boundary conditions and it is interesting to note that it is for this reason that Peube (1963) justifies the assumption that for higher approximations to the creeping flow solution the flow must be two-dimensional.

However we note that there is another alternative, i.e. $f''' = \phi(z)$. If this is the case $f(z)$ can be determined from (A-4) but the form of (A-4) implies that $f(z)$ must depend on r which is a contradiction of the initial assumption. This can be easily seen if one tries to solve (A-2) in terms of elliptic functions.

Rewriting (A-2) as

$$\frac{1}{2}(f')^2 = -B_1 f^3/3 + B_2 f + B_3 \qquad \text{(A-11)}$$

where

$$B_1 = \frac{1}{\nu r^2} \qquad B_2 = \frac{r}{\mu}\frac{dp}{dr} \qquad \text{(A-12)}$$

a solution of (A-11) in terms of elliptic integrals is

$$z = \int_0^f \frac{df}{\{2(B_1 f^3/3 + D_2 f + B_3)\}^{1/2}} \qquad \text{(A-13)}$$

Now since B_1 and B_2 are functions of r, f must depend on r as well.

If we assume that the inertia terms are negligible, i.e. $f^2 = 0$ the governing equation reduces to

$$\nu r^2 f'' = \frac{r^3}{\rho}\frac{dp}{dr} \qquad \text{(A-14)}$$

which implies that $f'' =$ constant, i.e. f is a parabolic function in z.

Author Higgins Brian Gavin
Name of thesis Some Aspects Of Radial Flow Between Parallel Disks. 1975

PUBLISHER:
University of the Witwatersrand, Johannesburg
©2013

LEGAL NOTICES:

Copyright Notice: All materials on the University of the Witwatersrand, Johannesburg Library website are protected by South African copyright law and may not be distributed, transmitted, displayed, or otherwise published in any format, without the prior written permission of the copyright owner.

Disclaimer and Terms of Use: Provided that you maintain all copyright and other notices contained therein, you may download material (one machine readable copy and one print copy per page) for your personal and/or educational non-commercial use only.

The University of the Witwatersrand, Johannesburg, is not responsible for any errors or omissions and excludes any and all liability for any errors in or omissions from the information on the Library website.