

https://dspace.org/

Reliability Theoretic Measures of Importance of Components within Monotone Systems

Drigo, Gino

2006-10-31T09:53:25Z
http://hdl.handle.net/10539/1520

Downloaded from a DSpace repository. https://dspace.org/

RELIABILITY THEORETIC MEASURES OF IMPORTANCE OF COMPONENTS WITHIN MONOTONE SYSTEMS

Gino Drigo

A dissertation submitted to the Faculty of Science, University of the Witwatersrand, Johannesburg, in fulfilment of the requirements for the degree of Master of Science.

Johannesburg, 15 September 2005

CONTENTS

		PAGE
DECLARATION		v
ABSTRACT		vi
DEDICATION		vii
ACKNOWLEDGEMENTS		viii
LIST OF FIGURES		ix
LIST OF TABLES		x
LIST OF SYMBOLS		xi
CHAPTER ONE – INTRODUCTION		
1.1	General Introduction	1
1.2	Objectives	2
1.3	Illustrative Example	3
CHAPTER TWO – PRELIMINARY THEORY		
2.1	Monotone Systems of Components	5
2.2	Modular Decomposition of Monotone Systems	21
2.3	The Dual of a System	26
2.4	Effects of Time Dependence on Availability	31
2.5	Key Results within Renewal Theory	35
CHAPTER THREE – TIME INDEPENDENT IMPORTANCE MEASURES		
3.1	Birnbaum Importance	44
3.2	Vesely – Fussell Importance	53
3.3	Criticality Importance	57
3.4	Ryabinin – Cherkesov Importance	62

3.5	Risk Reduction/Achievement Worth Importance	64
3.6	Butler's Cut and Path Importance	65
3.7	Vesely-Fussell Cut and Path Importance	72
3.8	Joint Reliability Importance	77
3.9	Maintenance Prioritisation Measures	86
3.10	Criticality of Nodes Ranking	89
3.11	Meng's Criticality Ranking	108
3.12	Meng's Criticality Importance	113
3.13	Link and Path Set Cut Set Importance	129

CHAPTER FOUR – TIME DEPENDENT IMPORTANCE MEASURES

4.1	Barlow – Proschan Importance	135
4.2	Minimal Cut Set and Minimal Path Set Importance	155
4.3	Sequential Contributory Importance	160
4.4	Upgrade Function Importance	162
4.5	Natvig Importance	165
4.6	Bergman's Infinitesimal Scale Change Importance	183
4.7	Expected Yield Importance	187

CHAPTER FIVE – BRIDGE STRUCTURE EXAMPLE

5.1	Introduction	193
5.2	Birnbaum Importance	196
5.3	Vesely – Fussell Importance	197
5.4	Criticality Importance	198
5.5	Ryabinin – Cherkesov Importance	198
5.6	Butler's Cut and Path Importance	199
5.7	Vesely-Fussell Cut and Path Importance	200
5.8	Joint Reliability Importance	200
5.9	Criticality of Nodes Ranking	201
5.10	Meng's Criticality Ranking	202

5.11	Meng's Criticality Importance	203
5.12	Link and Path Set Cut Set Importance	203
5.13	Barlow – Proschan Importance	205
5.14	Sequential Contributory Importance	206
5.15	Natvig Importance	207
5.16	Bergman's Infinitesimal Scale Change Importance	209

CHAPTER SIX – SUMMARY AND CONCLUSIONS 211

CHAPTER SEVEN - REFERENCES 215

DECLARATION

I declare that this dissertation is my own, unaided work. It is being submitted for the Degree of Master of Science in the University of the Witwatersrand, Johannesburg. It has not been submitted before for any degree or examination in any other university.

_____

(Signature of candidate)

_____ day of _____ 20 ___

ABSTRACT

This dissertation conducts a comprehensive and up to date review of measures of component and module importance within monotone systems, where it is assumed that components work independent of each other. The dissertation traces the development of these importance measures from the initial definition of Birnbaum importance right through to the definition of Meng's criticality importance. Furthermore, the dissertation draws a distinction between time independent measures and time dependent measures (such as the Barlow – Proschan measures). The dissertation demonstrates how such measures may be implemented in analysing the importance of components within the monotone systems by evaluating these measures for a well known bridge structure system example. This evaluation also reveals how each defined measure can be compared to each other. In conclusion, the dissertation describes how these measures can be extended to non-monotone systems or systems with dependent components.

DEDICATION

To love unconditionally is singly the greatest gift imparted to mankind by our creator. By far, it surpasses all virtues and achievements that can be extolled within any single lifetime, even that of wisdom. The act of love can above all, be expressed in the all consuming love of a man's self sacrifice for his family.

I dedicate this dissertation to my parents, who by their unerring example has taught ideals far beyond any that can be articulated in a medium other than by living them.

ACKNOWLEDGEMENTS

I acknowledge Professor Frank Beichelt for his patience and dedication in his supervising of this dissertation, as well as the support of all within the School of Statistics and Actuarial Science within the University of the Witwatersrand.

LIST OF FIGURES

		PAGE
Figure 1.3.1:	Representation of an audio playback system	4
Figure 2.1.1:	Representation of a series system	8
Figure 2.1.2:	Representation of a parallel system	9
Figure 2.1.3:	Representation of an irrelevant component	9
Figure 2.2.1:	Representation of hi-fi system with speaker module	18
Figure 2.3.1:	Representation of the Dual System for the Audio Playback System	27
Figure 3.1.1:	Comparison of Birnbaum's reliability importance for components c_2 and c_3 with equal component probabilities p.	50
Figure 3.10.1:	Representation of a system as a counter-example for the Converse of Theorem 3.10.4	92
Figure 3.10.2:	Representation of a system as a counter-example for the Converse of Theorem 3.10.2 and 3.10.3	93
Figure 5.1.1:	Representation of a bridge structure	193
Figure 5.1.2:	Representation of a bridge structure system when c_3 is functioning	194
Figure 5.1.3:	Representation of a bridge structure system when c_3 is failed	195

LIST OF TABLES

		PAGE
Table 3.8.1:	The joint reliability importance of components c_i and c_k for the audio playback system.	78
Table 3.12.1:	Decomposition of ${}^{\phi}W(2)$ into its subgroups for the audio playback system	118
Table 3.12.2:	Decomposition of ${}^{\phi}W(3)$ into its subgroups for the audio playback system	119
Table 3.12.3:	Decomposition of ${}^{\phi_3}W(3)$ into its subgroups for the audio playback system	126
Table 5.9.1:	Required sets needed to apply Theorem 3.10.7 to bridge structure system	201
Table 5.10.1:	Calculation of Meng's criticality ranking for bridge structure system	202
Table 5.12.1:	Calculation of Link importance ranking for bridge structure system	204
Table 5.12.2:	Required values for the calculation of path set cut set importance for bridge structure system	205
Table 5.14.1:	Sequential contributory importance contribution for component c_i under the bridge structure system	206
Table 5.15.1:	Values of Natvig N_1, N_2, N_3 and N_4 importance for the bridge structure system.	209

LIST OF SYMBOLS

n	Number of components within a system
c_i	The ith component within a system
x_i	Indicator variable of the state in which component c_i is in, where 1 signifies that the component is functioning and 0 signifies that the component is failed
p_i	Availability of component c_i
q_i	Unavailability of component c_i
$\mathbf{x}$	State vector of all components within the system
$(\cdot_i, \mathbf{x})$	State vector $\mathbf{x}$ in which component c_i takes state $\cdot$
$\mathbf{p}$	Vector of all component availabilities
$(\cdot_i, \mathbf{p})$	Vector of all component availabilities in which c_i has availability $\cdot$
I	The index set of all components
$(\mathbf{1}^M, \mathbf{x})$	The state vector in which all components within the index set $M \subseteq I$ are functioning
$(\mathbf{0}^M, \mathbf{x})$	The state vector in which all components within the index set $M \subseteq I$ are failed
${}_i\mathbf{x}$	The ith realisation of state vector $\mathbf{x}$
${}_i\mathbf{p}$	Probability of ${}_i\mathbf{x}$ occurring
$\phi(\mathbf{x})$	Structure function of the system of components under state vector $\mathbf{x}$
$\delta_i(\phi, \mathbf{x})$	The difference in the value that the structure function ϕ caused by a change in the state of component c_i
$h_\phi(\mathbf{p})$	The availability of the system under structure function ϕ and vector of component availabilities $\mathbf{p}$
$h_\phi(\cdot_i, \mathbf{p})$	The availability of the system under structure function ϕ and vector of component availabilities $(\cdot_i, \mathbf{p})$

${}^{\phi}P_l$	The lth path vector for a system with structure function ϕ
${}^{\phi}P_l(i)$	The lth path vector, which contains component c_i, for a system with structure function ϕ
${}^{\phi}PS_l$	The lth path set for a system with structure function ϕ
${}^{\phi}PS_l(i)$	The lth path set, which contains component c_i, for a system with structure function ϕ
${}^{\phi}C_l$	The lth cut vector for a system with structure function ϕ
${}^{\phi}C_l(i)$	The lth cut vector, which contains component c_i, for a system with structure function ϕ
${}^{\phi}CS_l$	The lth cut set for a system with structure function ϕ
${}^{\phi}CS_l(i)$	The lth cut set, which contains component c_i, for a system with structure function ϕ
${}^{\phi}P_j^m$	The jth minimal path vector for a system with structure function ϕ
${}^{\phi}P_j^m(i)$	The jth minimal path vector, which contains component c_i, for a system with structure function ϕ
${}^{\phi}PS_j^m$	The jth minimal path set for a system with structure function ϕ
${}^{\phi}PS_j^m(i)$	The jth minimal path set, which contains component c_i, for a system with structure function ϕ
${}^{\phi}C_j^m$	The jth minimal cut vector for a system with structure function ϕ
${}^{\phi}C_j^m(i)$	The jth minimal cut vector, which contains component c_i, for a system with structure function ϕ
${}^{\phi}CS_j^m$	The jth minimal cut set for a system with structure function ϕ

${}^{\phi}CS_j^m(i)$	The jth minimal cut set, which contains component c_i, for a system with structure function ϕ
${}^{\phi}u$	Number of minimal path sets ${}^{\phi}PS_j^m$ within a system with structure function ϕ
${}^{\phi}\rho_j(\mathbf{x})$	Minimal path series structure of the system with structure function ϕ under state vector $\mathbf{x}$
${}^{\phi}v$	Number of minimal cut sets ${}^{\phi}CS_j^m$ within a system with structure function ϕ
${}^{\phi}\kappa_j(\mathbf{x})$	Minimal cut parallel structures of the system with structure function ϕ under state vector $\mathbf{x}$
m	Number of modules within a system
m_k	The kth module within a system
n_k	Number of components within module m_k of a system
y_k	Indicator variable of the state in which module m_k is in, where 1 signifies that the module is functioning and 0 signifies that the module is failed
$\mathbf{y}$	State vector of all modules within the system
$\mathbf{x}_k$	State vector of all components within module m_k
$(\cdot_k, \mathbf{y})$	State vector $\mathbf{y}$ in which module m_k takes state $\cdot$
${}_i\mathbf{y}$	The ith realisation of state vector $\mathbf{y}$
$\phi_k(\mathbf{x}_k)$	Structure function of module m_k under state vector $\mathbf{x}_k$
$\psi(\mathbf{y})$	Structure function of a system with modules under state vector $\mathbf{y}$
$h_\psi(\mathbf{p})$	The availability of the system with modules under structure function ψ and vector of component availabilities $\mathbf{p}$
$(\cdot_k, \mathbf{p})$	Vector of all module availabilities in which module m_k has availability $\cdot$
$\phi^D(\overline{\mathbf{x}})$	The structure function of the dual of a system with structure function ϕ

T_i	The lifetime of component c_i
$f_i(t)$	The probability density function of component lifetime T_i
$F_i(t)$	The unavailability of component c_i at time t when no repairs are permissible
$\overline{F}_i(t)$	The availability of component c_i at time t when no repairs are permissible
$x_i(t)$	Indicator variable of the state in which component c_i is in at time t
$R(t)$	Common hazard rate function under the proportional hazard rate case
λ_i	Constant of proportionality of the hazard rate of component c_i under the proportional hazard rate case
$h(t)$	The hazard rate function of component c_i
$\mathbf{x}(t)$	State vector of component availabilities at time t
$\mathbf{0}(t)$	State vector where all components are failed at time t
$\mathbf{1}(t)$	State vector where all components are functioning at time t
$(\cdot_i, \mathbf{x}(t))$	State vector $\mathbf{x}(t)$ in which module m_k takes state $\cdot$
$\overline{\mathbf{F}}(t)$	Vector of component availabilities at time t
T	The lifetime of a system
$\phi(\mathbf{x}(t))$	The structure function of a system at time t under state vector $\mathbf{x}(t)$
$h_\phi(\overline{\mathbf{F}}(t))$	The system availability of a system at time t under the vector of component availabilities $\overline{\mathbf{F}}(t)$
$y_k(t)$	Indicator variable of the state of module m_k at time t
$\mathbf{x}_k(t)$	State vector of all components within module m_k at time t
$\phi_k(\mathbf{x}_k(t))$	The structure function of module m_k at time t under state vector $\mathbf{x}_k(t)$
$\overline{\mathbf{F}}_k(t)$	Vector of component availabilities of those components constituting module m_k

$A_i(t)$	Availability of component c_i at time t when component repairs are permissible
A_i	the limiting availability of component c_i
$\mathbf{A}(t)$	The vector of all component availabilities at time t when component repairs are permissible
$h_\phi(\mathbf{A}(t))$	The availability at time t of a system with structure function ϕ and vector of component availabilities $\mathbf{A}(t)$
$I_\phi^B(i,1)$	Birnbaum's structural importance of component c_i for the functioning of a system with structure function ϕ
$I_\phi^B(i,0)$	Birnbaum's structural importance of component c_i for the failure of a system with structure function ϕ
$I_\phi^B(i)$	Birnbaum's structural importance of component c_i for a system with structure function ϕ
$I_\phi^B(i,1,\mathbf{p})$	Birnbaum's reliability importance of component c_i for the functioning of a system with structure function ϕ and vector of component availabilities $\mathbf{p}$
$I_\phi^B(i,0,\mathbf{p})$	Birnbaum's reliability importance of component c_i for the failure of a system with structure function ϕ and vector of component availabilities $\mathbf{p}$
$I_\phi^B(i,\mathbf{p})$	Birnbaum's reliability importance of component c_i for a system with structure function ϕ and vector of component availabilities $\mathbf{p}$
${}^\phi v(i)$	Number of minimal cut sets ${}^\phi CS_j^m(i)$ within a system with structure function ϕ
${}^\phi A_j(i)$	The event that all components in minimal cut set ${}^\phi CS_j^m(i)$ are failed
$I_\phi^{V-F}(i,\mathbf{p})$	Vesely – Fussell reliability importance of component c_i for a system with structure function ϕ and vector of component availabilities $\mathbf{p}$

$I_{\phi}^{V-F}(i)$	Vesely – Fussell structural importance of component c_i for a system with structure function ϕ
${}^{\psi}A_j(k)$	The event that all modules in minimal cut set ${}^{\psi}CS_j^m(k)$ are failed
${}^{\phi_k}A_j(i)$	The event that all components in minimal cut set ${}^{\phi_k}CS_j^m(i)$ are failed
${}^{\phi_k}v(i)$	Number of minimal cut sets ${}^{\phi_k}CS_j^m(i)$ within module m_k with structure function ϕ_k
${}^{\phi}B_j(i)$	The event that all components in minimal path set ${}^{\phi}PS_j^m(i)$ under structure function ϕ are functioning
$I_{\phi}^{CR}(i,\mathbf{p})$	Lambert's criticality importance measure for component c_i within a system with structure function ϕ and vector of component availabilities **p**
$I_{\phi}^{CRF}(i,\mathbf{p})$	Critical functionality importance measure for component c_i within a system with structure function ϕ and vector of component availabilities **p**
$I_{\phi}^{R-Ch}(i,\mathbf{p})$	Ryabinin – Cherkesov importance measure for component c_i within a system with structure function ϕ and vector of component availabilities **p**
$I_{\phi}^{R-Ch*}(i,\mathbf{p})$	Ryabinin – Cherkesov * importance measure for component c_i within a system with structure function ϕ and vector of component availabilities **p**
$I_{\phi}^{RRW}(i,\mathbf{p})$	Risk reduction worth importance measure for component c_i within a system with structure function ϕ and vector of component availabilities **p**
$I_{\phi}^{RAW}(i,\mathbf{p})$	Risk achievement worth importance measure for component c_i within a system with structure function ϕ and vector of component availabilities **p**

${}^{\phi}d_{jr}^{i}$	Number of collections of j distinct minimal cut sets such that the union of sets within each collection contains exactly r components including component c_i
$c_i >_{\phi}^{BC} c_k$	Butler's cut importance ranking of components within a system with structure function ϕ where component c_i is more important than component c_k
$c_i =_{\phi}^{BC} c_k$	Butler's cut importance ranking of components within a system with structure function ϕ where component c_i is of equal importance as component c_k
${}^{\phi}e_i$	Cardinality of the smallest minimal cut set containing c_i
${}^{\phi}f_i$	Number of minimal cut sets with cardinality ${}^{\phi}e_i$
${}^{\phi}A_j$	The event that all components within minimal cut vector ${}^{\phi}CS_j^m$ fails
${}^{\phi}g_{jr}^{i}$	Number of collections of j distinct minimal cut sets containing component c_i such that the union of sets within each collection contains exactly r components
$c_i >_{\phi}^{V-FC} c_k$	Vesely – Fussell cut importance ranking of components within a system with structure function ϕ where component c_i is more important than component c_k
$c_i =_{\phi}^{V-FC} c_k$	Vesely – Fussell cut importance ranking of components within a system with structure function ϕ where component c_i is of equal importance as component c_k
r_i	Cardinality of $\bigcup_{j=1}^{{}^{\phi}v(i)} {}^{\phi}CS_j^m(i)$.
${}^{\phi}a_i$	Cardinality of the smallest minimal cut set containing c_i
${}^{\phi}t_i$	Number of minimal cut sets with cardinality ${}^{\phi}a_i$
$I_{\phi}^{JR}(i,k,\mathbf{p})$	Joint reliability importance measure for component c_i within a system with structure function ϕ and vector of component availabilities $\mathbf{p}$

${}^{\phi}PS_{l_1}^{m}(i \setminus k)$	Minimal path set containing component c_k but not component c_i within a system with structure function ϕ
${}^{\phi}u(i \setminus k)$	Number of minimal path sets ${}^{\phi}PS_{l_1}^{m}(i \setminus k)$
${}^{\phi}PS_{l_3}^{m}\left(\overline{\{i,k\}}\right)$	Minimal path set containing neither components c_i nor c_k respectively within a system with structure function ϕ
${}^{\phi}u\left(\overline{\{i,k\}}\right)$	Number of minimal path sets ${}^{\phi}PS_{l_3}^{m}\left(\overline{\{i,k\}}\right)$ containing neither components c_i nor c_k respectively
${}^{\phi}A_{l_1}$	Event that all the components in the respective minimal path set ${}^{\phi}PS_{l_1}^{m}(i \setminus k)$ functioning.
${}^{\phi}A_{l_2}$	Event that all the components in the respective minimal path set ${}^{\phi}PS_{l_2}^{m}(k \setminus i)$ are functioning.
${}^{\phi}A_{l_3}$	Event that all the components in the respective minimal path set ${}^{\phi}PS_{l_3}^{m}\left(\overline{\{i,k\}}\right)$ are functioning.
${}^{\phi}CS_{l_1}^{m}(i \setminus k)$	Minimal cut set containing component c_i but not component c_k within a system with structure function ϕ
${}^{\phi}v(i \setminus k)$	Number of minimal cut sets ${}^{\phi}CS_{l_1}^{m}(i \setminus k)$ containing component c_i but not component c_k
${}^{\phi}CS_{l_3}^{m}\left(\overline{\{i,k\}}\right)$	Minimal path sets containing neither components c_i nor c_k within a system with structure function ϕ
${}^{\phi}v\left(\overline{\{i,k\}}\right)$	Number of minimal path sets ${}^{\phi}CS_{l_3}^{m}\left(\overline{\{i,k\}}\right)$ containing neither components c_i nor c_k
${}^{\phi}B_{l_1}$	Event that all the components in the respective minimal cut set ${}^{\phi}CS_{l_1}^{m}(i \setminus k)$ are failed
${}^{\phi}B_{l_2}$	Event that all the components in the respective minimal cut set ${}^{\phi}CS_{l_2}^{m}(k \setminus i)$ are failed

$^{\phi}B_{l_3}$	Event that all the components in the respective minimal cut set $^{\phi}CS_{l_3}^{m}\left(\overline{\{i,k\}}\right)$ are failed
Q_j	Core damage frequency contribution of the jth minimal cut set $^{\phi}CS_j^m$
CDF	Core damage frequency
$^{\phi}CS_j^m >^{CDF} {}^{\phi}CS_l^m$	Core damage frequency importance ranking of minimal cut sets within a system with structure function ϕ where minimal cut set $^{\phi}CS_j^m$ is more important than minimal cut set $^{\phi}CS_l^m$
$^{\phi}CS_j^m =^{CDF} {}^{\phi}CS_l^m$	Core damage frequency importance ranking of components within a system with structure function ϕ where minimal cut set $^{\phi}CS_j^m$ is of equal importance as minimal cut set $^{\phi}CS_l^m$
r_i	Sum of core damage frequency contribution from all minimal cut sets containing component c_i
$r_{i_1 i_2}$	Sum of core damage frequency contribution from all minimal cut sets containing both components c_{i_1} and c_{i_2}
$r_{i_1 i_2 \ldots i_{k-1} i_k}$	Sum of core damage frequency contribution from all minimal cut sets containing components c_{i_1} through to c_{i_k}
g_i	Factor of increase of component c_i unavailability
$I_{\phi}^{RR}(i,\mathbf{p})$	Risk reduction importance measure for component c_i within a system with structure function ϕ and vector of component availabilities $\mathbf{p}$
$I_{\phi}^{RI}(i,\mathbf{p})$	Risk increase importance measure for component c_i within a system with structure function ϕ and vector of component availabilities $\mathbf{p}$
$c_i >_{\phi}^{cn} c_k$	Criticality of nodes importance ranking of components within a system with structure function ϕ where component c_i is more important than component c_k

$c_i =_{\phi}^{cn} c_k$	Criticality of nodes importance ranking of components within a system with structure function ϕ where component c_i is of equal importance as component c_k
${}^{\phi}A_{c_i}^{m}$	The set of all minimal path sets containing component c_i
${}^{\phi}B_{c_i}^{m}$	The set of all minimal cut sets containing component c_i
$\mathbf{x}^{(i,k)}$	State vectors obtained by deleting the state of components c_i and c_k in $\mathbf{x}$.
${}^{\phi}B_{c_i \setminus c_k}^{m}$	The set of all minimal cut sets containing c_i but not c_k
${}^{\phi}A_{c_i \setminus c_k}^{m}$	The set of all minimal path sets containing c_i but not c_k
$c_i >_{\phi}^{MC} c_k$	Meng's criticality importance ranking of components within a system with structure function ϕ where component c_i is more important than component c_k
$c_i =_{\phi}^{MC} c_k$	Meng's criticality importance ranking of components within a system with structure function ϕ where component c_i is of equal importance as component c_k
${}^{\phi}d_{jr}^{i\setminus k}$	The number of collections of j distinct minimal cut sets such that the union of sets within each collection contains exactly r components including component c_i but not component c_k
${}^{\phi}d_{jr}^{ik}$	The number of collections of j distinct minimal cut sets such that the union of sets within each collection contains exactly r components including component c_i and component c_k
${}^{\phi}W(i)$	The set of all state vectors $\mathbf{x}$ that exclude the state of
${}^{\phi}B(i)$	The set of state vectors $\mathbf{x}$, excluding the state c_i, such that $\mathbf{x}$ is a critical state vector in terms of component c_i
$I_0(\mathbf{x})$	The set of failed components within state vector $\mathbf{x}$ i.e.
$I_1(\mathbf{x})$	The set of functioning components within state vector $\mathbf{x}$

${}^{\phi}E_1(i)$	The set of state vectors $(\cdot_i, \mathbf{x})$ such that the components, excluding c_i, of at least one minimal cut set ${}^{\phi}CS_j^m(i)$ (containing c_i) are failed
${}^{\phi}V_1(i)$	The set of non-critical state vectors $(\cdot_i, \mathbf{x})$ such that the components, excluding c_i, of at least one minimal cut set ${}^{\phi}CS_j^m(i)$ (containing c_i) are failed. Thus ${}^{\phi}V_1(i) = {}^{\phi}E_1(i) \setminus {}^{\phi}B(i)$
${}^{\phi}E_2(i)$	The set of state vectors $(\cdot_i, \mathbf{x})$ such that the components, excluding c_i, of at least one minimal path set ${}^{\phi}PS_j^m(i)$ (containing c_i) are functioning
${}^{\phi}V_2(i)$	The set of non-critical state vectors $(\cdot_i, \mathbf{x})$ such that the components, excluding c_i, of at least one minimal path set ${}^{\phi}PS_j^m(i)$ (containing c_i) are functioning
${}^{\phi}N_1(i)$	The set of non-critical state vectors $(\cdot_i, \mathbf{x})$ such that the failed components of $(\cdot_i, \mathbf{x})$ do not form any minimal cut set ${}^{\phi}CS_j^m(i)$ (containing c_i) and the system is failed when c_i is functioning
${}^{\phi}N_2(i)$	The set of non-critical state vectors $(\cdot_i, \mathbf{x})$ such that the functioning components of $(\cdot_i, \mathbf{x})$ do not form any minimal path set ${}^{\phi}PS_j^m(i)$ (containing c_i) and the system is functioning when c_i is failed
$I_{\phi}^{MC}(i, \mathbf{p})$	Meng's criticality reliability importance measure for component c_i within a system with structure function ϕ and vector of component availabilities $\mathbf{p}$
$I_{\phi}^{MC}(i)$	Meng's criticality structural importance measure for component c_i within a system with structure function ϕ

$c_i >_\phi^L c_k$	Link importance ranking of components within a system with structure function ϕ where component c_i is more important than component c_k
$c_i =_\phi^L c_k$	Link importance ranking of components within a system with structure function ϕ where component c_i is of equal importance as component c_k
${}^{\phi}SMPS_i(1)$	The smallest minimal path set for which $x_i = 1$
${}^{\phi}SMCS_i(1)$	The smallest minimal cut set for which $x_i = 1$
${}^{\phi}SMPS_i(0)$	The smallest minimal path set for which $x_i = 0$
${}^{\phi}SMCS_i(0)$	The smallest minimal cut set for which $x_i = 0$
${}^{\phi}NSMPS_i(1)$	The number of components in ${}^{\phi}SMPS_i(1)$
${}^{\phi}NSMCS_i(1)$	The number of components in ${}^{\phi}SMCS_i(1)$
${}^{\phi}NSMPS_i(0)$	The number of components in ${}^{\phi}SMPS_i(0)$
${}^{\phi}NSMCS_i(0)$	The number of components in ${}^{\phi}SMCS_i(0)$
$\left\lvert {}^{\phi}SMPS_i(1) \right\rvert$	The number of minimal path sets having ${}^{\phi}NSMPS_i(1)$ components.
$\left\lvert {}^{\phi}SMCS_i(1) \right\rvert$	The number of minimal path sets having ${}^{\phi}NSMCS_i(1)$ components.
$\left\lvert {}^{\phi}SMPS_i(0) \right\rvert$	The number of minimal path sets having ${}^{\phi}NSMPS_i(0)$ components.
$\left\lvert {}^{\phi}SMCS_i(0) \right\rvert$	The number of minimal path sets having ${}^{\phi}NSMCS_i(0)$ components.
${}^{\phi}a_r^i(1)$	The number of path sets ${}^{\phi(1_i,\mathbf{x})}PS_j$ that contain *r* components
${}^{\phi}a_r^i(0)$	The number of path sets ${}^{\phi(0_i,\mathbf{x})}PS_j$ that contain *r* components
$I_\phi^{B-P}(i,\overline{\mathbf{F}}(t))$	The Barlow – Proschan reliability importance of component c_i within a system with structure function ϕ under vector of component availabilities $\overline{\mathbf{F}}(t)$ at time *t*

$I_{\psi}^{B-P}(k,\overline{\mathbf{F}}(t))$	The Barlow-Proschan reliability importance for module m_k under structure function ψ under vector of component availabilities $\overline{\mathbf{F}}(t)$ at time t
$I_{\phi}^{B-P}(i)$	Barlow – Proschan structural importance for component c_i under structure function ϕ and vector of component availabilities $\mathbf{p}=(p,p,\ldots,p,p)$
${}^{\phi}n_r^P(i)$	The number of critical path vectors for component c_i of size r
${}^{\phi}n_r^C(i)$	The number of critical cut vectors for component c_i of size r
$I_{\phi}^{GB-P}(i,F(p))$	The Generalised Barlow-Proschan structural importance for component c_i within a system with structure function ϕ and vector of component availabilities $\mathbf{p}=(p,p,\ldots,p,p)$ with cumulative distribution function $F(p)$ of $\mathbf{p}$
$I_{\phi}^{B-P}(i,\mathbf{A})$	The Barlow-Proschan reliability importance for component c_i under component repairs
$I_{\phi}^{MCS}(j,\overline{\mathbf{F}}(t))$	The minimal cut set reliability importance of the jth minimal cut set ${}^{\phi}CS_j^m$
$I_{\phi}^{MCS}(j)$	The minimal cut Set structural importance of the jth minimal cut set ${}^{\phi}CS_j^m$
$I_{\phi}^{MPS}(j,\overline{\mathbf{F}}(t))$	The minimal path set reliability importance of the jth minimal cut set ${}^{\phi}PS_j^m$
$I_{\phi}^{MPS}(j)$	The minimal path set structural importance of the jth minimal cut set ${}^{\phi}PS_j^m$
$I_{\phi}^{UP}(i,\overline{\mathbf{F}}(t))$	The Upgrade Function importance of component c_i under a system with structure function ϕ and vector of component availabilities $\overline{\mathbf{F}}(t)$
$I_{\phi}^{UP}(i,\mathbf{h}(t))$	The Upgrade Function importance of component c_i with hazard rate function $h_i(t)$ under a system with structure

	function ϕ
$I_{\phi}^{N_1}(i)$	The Natvig N_1 importance measure for component c_i under a system with structure function ϕ
$I_{\psi}^{N_1}(k)$	The Natvig N_1 importance measure for module m_k under a system with structure function ψ
$I_{\phi}^{N_1}(j)$	The Natvig 1 N_1 importance measure for minimal cut set ${}^{\phi}CS_j^m$ under a system with structure function ϕ
$I_{\phi}^{N_1*}(i,\overline{\mathbf{F}}(t))$	The modified Natvig N_1* importance measure for component c_i under a system with structure function ϕ
${}^{\phi}w_i^{N_1*}(t)$	Weigh function under which the modified Natvig N_1* importance measure for component c_i is defined
$I_{\phi}^{N_3}(i,\overline{\mathbf{F}}(t))$	Natvig's N_2 importance of component c_i under a system with structure function ϕ under the proportional hazard rate function assumption
$I_{\phi}^{N_3}(i,\overline{\mathbf{F}}(t))$	Natvig's N_3 importance for component c_i under a system with structure function ϕ wherein a single total repair of c_i is allowed
$I_{\phi}^{N_4}(i,\overline{\mathbf{F}}(t))$	Natvig's N_4 importance for component c_i under a system with structure function ϕ wherein a single replacement of c_i with a perfect component is allowed
$I_{\phi}^{BGLDR}(i,\overline{\mathrm{G}}_i(t),\overline{\mathbf{F}}(t))$	The Bergman general lifetime distribution replacement importance of component c_i under a system with structure function ϕ
$I_{\phi}^{BISC}(i,\overline{\mathbf{F}}(t))$	The Bergman infinitesimal scale change importance of component c_i under a system with structure function ϕ
$I_{\phi}^{XGEY}(i,\overline{G}_i(t),\overline{\mathbf{F}}(t))$	The Xie general expected yield importance of component c_i under a system with structure function ϕ under yield function $Y(t)$

$I_{\phi}^{Y}\left(i,\overline{\mathbf{F}}(t)\right)$	Xie's expected yield importance for component c_i within a system with structure function ϕ under yield function $Y(t)$
$I_{\psi}^{Y}\left(k,\overline{\mathbf{F}}(t)\right)$	Xie's expected yield importance for module m_k within a system with structure function ψ under yield function $Y(t)$

1 INTRODUCTION

1.1 General Introduction

In many engineering disciplines, there is an overall aspiration to design, operate and maintain multicomponent systems capable of performing a desired function under various cost, time and environmental constraints. Within each system, the same aspiration relates to the design, operation and maintenance of the constituent components of the system.

As each constituent component forms part of a system, it becomes a well-established fact that within all systems, the contribution of each component to the successful operation of the whole system varies according to the role each component plays within the system as well as the diverse properties that each component exhibits within its operating environment.

Having detailed knowledge about the role of a component and its various operating conditions will ensure that a system designer designs and a technician operates and maintains the system in an optimal state in terms of cost and efficiency in the performance of the system's required task.

Furthermore, the designer may wish to examine the weaknesses and strengths of the system as well as its reliance on crucial components. Importance measures attempt to identify these components so that the designer may conduct further research and development on these components to improve the quality of performance of the system overall.

Importance measures are used to determine solutions to the following questions of interest:

- The contribution of each component to the availability of a system as well as how this contribution varies according to how the availability of a component varies.
- The maximum increase in system availability that can be achieved by increasing the availability of a component.
- The component that will most likely cause system failure.
- The component that contributes the most to system failure.

In maintenance, importance measures may suggest the most efficient way of diagnosing system failure by generating a checklist of components, in the order in which components are most likely to cause the failure.

Importance measures may also indicate which maintenance policies to pursue in order to maximise the system's availability.

There are two defined types of importance measures, namely structural and reliability importance measures. Structural importance measures depend exclusively on the topology of a system, whilst reliability importance measures include the probabilistic information about the state of each component within the system. Furthermore, this information may be related to the duration of time that the relevant component of the system had been in a functioning or failed state (when repairs of failed components are permissible).

Computations of various reliability importance measures, and to a lesser extent structural importance, become prohibitively extensive for complex systems. This, coupled with the numerous ways in which a component can influence a system, has lead to several fundamentally different importance measures being defined and used extensively.

1.2 Objectives

This dissertation aims to cover the following:

1 Define the various importance measures, and their respective properties, already found within the available literature.
2 Conduct a comparative study of these measures using a classical example already found in the literature.

Aim 1 will be covered in chapters 3 and 4 in this dissertation whilst chapter 5 will deal with aim 2. In order for this to be done, we are required to define and explain all notation and background theoretical concepts. Chapter 2 will suffice for this purpose.

Importance measures, both structural and reliability measures, can be seen to fall into one of two categories, namely time independent and time dependent importance measures.

Time independent importance measures were the first importance measures to be historically defined. These measures are constructed on the suppositions that firstly, the availability of each component remains constant and, secondly, the topology of the entire system remains unchanged throughout the analysis of a component's importance. The development of time independent importance measures is covered in chapter 3.

Time dependent measures are those importance measures that look at relaxing the assumption that the availability of a component remains constant over time. As a component's availability decreases with use, which can be quantified in terms of time, these importance measures are constructed by taking the role that time plays on a system into account. A discussion of these measures is made in chapter 4.

1.3 Illustrative Example

Finally, for illustrative purposes, we will include a continuing example throughout the dissertation and is shown in Figure 1.3.1:

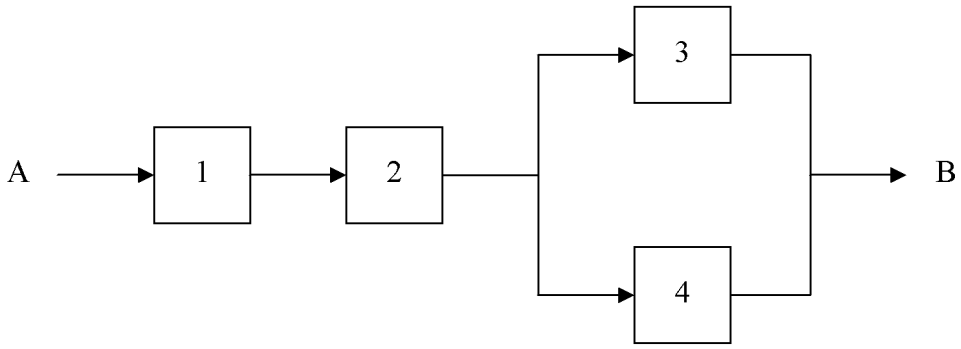

Figure 1.3.1: *Representation of an audio playback system*

Figure 1.1 is a simplified representation of an audio playback system. An audio signal is inputted at A, by means of a compact disc (CD) or analogue tape, into the system consisting of 5 components. Component 1 represents the audio player, either a CD player or tape deck, component 2 symbolises the amplifier, whilst components 3 and 4 correspond to the audio speakers through which the audio is played back to the listener at B.

In general, we would be interested in measuring the likelihood that an individual would be able to listen to the audio. The requirement for this to happen is that the audio signal must pass through the audio player, the amplifier and least one of the speakers. Clearly, in this example we are ignoring the fact that the compact disc or analogue tape could be defective and no audio signal from point A reaches the CD player or tape deck. To incorporate this possibility in our system, we could insert a new component that signifies the CD or analogue tape between A and component 1.

Moreover, in this dissertation, we are interested in quantifying the importance of each component within the hi-fi system and not whether the listener actually hears the audio or not.

2 Preliminary Theory

Extensive tracts of this chapter can be found in most published textbooks in the field of Reliability Theory. For the purpose of this dissertation, we refer to Aven and Jensen [1], Barlow and Proschan [2], Beichelt [3][4], Kovalenko, Kuznetsov and Pegg [5] and Modarres, Kaminskiy and Krivtsov [6].

2.1 Monotone Systems of Components

Consider a system consisting of n components where we denote each component by c_i for $i = 1,2,\ldots,n$. We can ascribe to each component c_i the binary indicator (Boolean) variable:

$$x_i = \begin{cases} 1 & \text{when component } c_i \text{ is functioning} \\ 0 & \text{when component } c_i \text{ is failed} \end{cases}$$

We shall call the probability that component c_i functions, i.e. $\Pr[x_i = 1]$, the availability of component c_i and will be denoted as p_i. Consequently, the probability that component c_i is in a failed state i.e. $\Pr[x_i = 0]$, is known as the unavailability of component c_i and will be denoted by $q_i = 1 - p_i = \bar{p}_i$.

The n – tuple $\mathbf{x} = (x_1, x_2, \ldots, x_n)$ is called the state vector of the system and expresses, for a given realisation of the system, the state that each component c_i of the system is in. Furthermore, we define the vector $\mathbf{p} = (p_1, p_2, \ldots, p_{n-1}, p_n)$ of known values of the availabilities of each component c_i.

When required, we shall use the following notation for state vectors **x** and **z**:

$$\mathbf{x} \le \mathbf{z} \quad \text{when} \quad x_i \le z_i \quad \text{for} \quad i = 1,2,\ldots,n$$
$$\mathbf{x} = \mathbf{z} \quad \text{when} \quad x_i = z_i \quad \text{for} \quad i = 1,2,\ldots,n$$
$$\mathbf{x} < \mathbf{z} \quad \text{when} \quad \mathbf{x} \le \mathbf{z} \quad \text{and} \quad \mathbf{x} \ne \mathbf{z}$$
$$\mathbf{0} = (0,0,\ldots,0,0)$$
$$\mathbf{1} = (1,1,\ldots,1,1)$$
$$(0_i, \mathbf{x}) = (x_1, x_2, \ldots, x_{i-1}, 0, x_{i+1}, x_{i+2}, \ldots, x_n)$$
$$(1_i, \mathbf{x}) = (x_1, x_2, \ldots, x_{i-1}, 1, x_{i+1}, x_{i+2}, \ldots, x_n)$$

Let $I = \{1,2,\ldots,n-1,n\}$ be the index set of all components of a known system, For $M \subseteq I$, we will use the notation $(\mathbf{1}^M, \mathbf{x})$ to indicate those state vectors **x** that have components c_j, $j \in M$, functioning whilst $(\mathbf{0}^M, \mathbf{x})$ indicates that components c_j, $j \in M$, are failed.

Definition 2.1.1: *Independent Components*

We say that two components c_i and c_j are independent of each other when the state that component c_i (or c_j) is in is not changed by the state that component c_j (or c_i) is in. Probabilistically this means that

$$\Pr[x_i = 1 | x_j = 1] = \Pr[x_i = 1 | x_j = 0] = \Pr[x_i = 1].$$

An equivalent expression for the independence of components c_i and c_j is that

$$\Pr[\{x_i = 1\} \cap \{x_j = 1\}] = p_i p_j.$$

For a system of n components, there are 2^n possible state vector and so for Figure 1.3.1, we can list all the possible state vectors, ${}_i\mathbf{x}$, and their associated probabilities, ${}_i\mathbf{p}$, as:

$$
\begin{aligned}
{}_1\mathbf{x} &= (0,0,0,0) & {}_1\mathbf{p} &= q_1q_2q_3q_4 & {}_2\mathbf{x} &= (0,0,0,1) & {}_2\mathbf{p} &= q_1q_2q_3p_4 \\
{}_3\mathbf{x} &= (0,0,1,0) & {}_3\mathbf{p} &= q_1q_2p_3q_4 & {}_4\mathbf{x} &= (0,1,0,0) & {}_4\mathbf{p} &= q_1p_2q_3q_4 \\
{}_5\mathbf{x} &= (1,0,0,0) & {}_5\mathbf{p} &= p_1q_2q_3q_4 & {}_6\mathbf{x} &= (0,0,1,1) & {}_6\mathbf{p} &= q_1q_2p_3p_4 \\
{}_7\mathbf{x} &= (0,1,0,1) & {}_7\mathbf{p} &= q_1p_2q_3p_4 & {}_8\mathbf{x} &= (1,0,0,1) & {}_8\mathbf{p} &= p_1q_2q_3p_4 \\
{}_9\mathbf{x} &= (0,1,1,0) & {}_9\mathbf{p} &= q_1p_2p_3q_4 & {}_{10}\mathbf{x} &= (1,0,1,0) & {}_{10}\mathbf{p} &= p_1q_2p_3q_4 \\
{}_{11}\mathbf{x} &= (1,1,0,0) & {}_{11}\mathbf{p} &= p_1p_2q_3q_4 & {}_{12}\mathbf{x} &= (0,1,1,1) & {}_{12}\mathbf{p} &= q_1p_2p_3p_4 \\
{}_{13}\mathbf{x} &= (1,0,1,1) & {}_{13}\mathbf{p} &= p_1q_2p_3p_4 & {}_{14}\mathbf{x} &= (1,1,0,1) & {}_{14}\mathbf{p} &= p_1p_2q_3p_4 \\
{}_{15}\mathbf{x} &= (1,1,1,0) & {}_{15}\mathbf{p} &= p_1p_2p_3q_4 & {}_{16}\mathbf{x} &= (1,1,1,1) & {}_{16}\mathbf{p} &= p_1p_2p_3p_4
\end{aligned}
$$

Lemma 2.1.2: *Boolean Operators*

i. The conjunctive Boolean operator, $\wedge$, is defined as

$$x_i \wedge x_j = x_i x_j = \begin{cases} 1 & \text{for} \quad x_i = x_j = 1 \\ 0 & \text{otherwise} \end{cases} \qquad \text{where } i \neq j$$

ii. The disjunctive Boolean operator, $\vee$, is defined as

$$x_i \vee x_j = x_i + x_j - x_i x_j = \begin{cases} 0 & \text{for} \quad x_i = x_j = 0 \\ 1 & \text{otherwise} \end{cases} \qquad \text{where } i \neq j$$

iii. The negating Boolean operator is defined as $\bar{x}_i = 1 - x_i = \begin{cases} 1 & \text{for} \quad x_i = 0 \\ 0 & \text{for} \quad x_i = 1 \end{cases}$

We note that $x_i \vee x_j = 1 - \left(1 - x_i - x_j + x_i x_j\right) = 1 - \bar{x}_i \bar{x}_j$ as well as that the conjunctive and disjunctive operators for n components can be generalised respectively to:

i. $\bigwedge_{i=1}^{n} x_i = x_1 \wedge x_2 \wedge \ldots \wedge x_n = \begin{cases} 1 & \text{for} \quad x_1 = x_2 = \ldots = x_n = 1 \\ 0 & \text{otherwise} \end{cases}$

ii. $\bigvee_{i=1}^{n} x_i = x_1 \vee x_2 \vee \ldots \vee x_n = \begin{cases} 0 & \text{for} \quad x_1 = x_2 = \ldots = x_n = 0 \\ 1 & \text{otherwise} \end{cases}$

Definition 2.1.3: *Structure Function of a System*

We assign the binary indicator variable ϕ to the system where:

$$\phi = \begin{cases} 1 & \text{when the system is functioning} \\ 0 & \text{when the system is failed} \end{cases}$$

When ϕ is explicitly expressed in terms of $\mathbf{x}$ i.e. $\phi(\mathbf{x})$ we say that ϕ is the structure function of the system.

Due to the way that the conjunction and disjunction operators in Lemma 2.2 are defined, we can find the structure functions for two types of systems.

Definition 2.1.4: *Series System*

A series system is a system that is functioning if and only if every constituent component is functioning. For a series system of n components, the structure function is:

$$\phi(\mathbf{x}) = \bigwedge_{i=1}^{n} x_i = \prod_{i=1}^{n} x_i$$

Diagrammatically, we can represent the series system as:

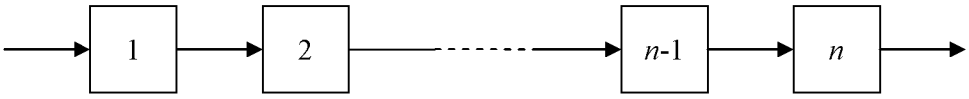

Figure 2.1.1: *Representation of a series system*

Definition 2.1.5: *Parallel System*

A parallel system is a system that is failed if and only if every constituent component is failed. For a parallel system of n components, the structure function is

$$\phi(\mathbf{x}) = \bigvee_{i=1}^{n} x_i = \coprod_{i=1}^{n} x_i \text{ where } \coprod_{i=1}^{n} x_i = 1 - \prod_{i=1}^{n} \bar{x}_i = 1 - \prod_{i=1}^{n} (1 - x_i).$$

Diagrammatically, we can represent the parallel system as:

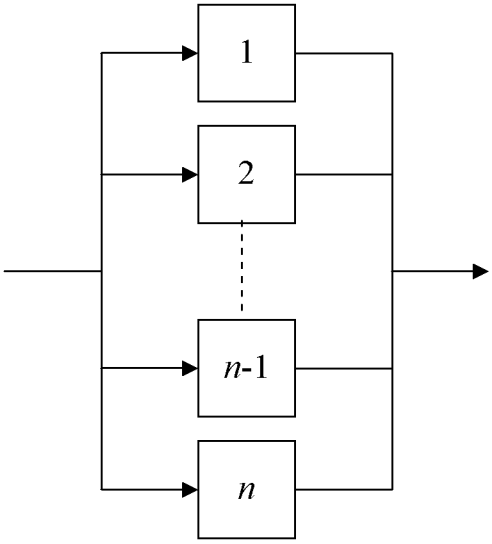

Figure 2.1.2: *Representation of a parallel system*

Recalling that, within our audio playback system, we are interested in at least one speaker, the amplifier and the audio player being operational simultaneously then the structure function of the system is:

$$\phi(\mathbf{x}) = x_1 \wedge x_2 \wedge (x_3 \vee x_4) = x_1 x_2 (1 - \bar{x}_3 \bar{x}_4) \qquad (2.1.1)$$

since components c_3 and c_4 are in parallel with each other and, combined, are in series with components c_1 and c_2.

It can also be noted that the roles that components c_1 and c_2 as well as components c_3 and c_4 respectively play within the system are topographically interchangeable between each other. Thus, throughout the remainder of this dissertation, we will concentrate solely our results on components c_2 and c_3 whilst knowing that the results for components c_1 and c_4 follow directly from the symmetry of their functional roles within the system.

Definition 2.1.6: *Irrelevant Components within a System*

Within a system with structure function ϕ, component c_i is said to be irrelevant if $\phi(0_i, \mathbf{x}) = \phi(1_i, \mathbf{x})$ for all possible state vectors **x**. If this does not occur then we say that component c_i is relevant.

Relevant components are also called critical components.

By enumeration we can verify that, for our audio playback system, we have a system consisting wholly of relevant components.

An example of an irrelevant component is component 2 of the system portrayed by figure 2.1.3 below.

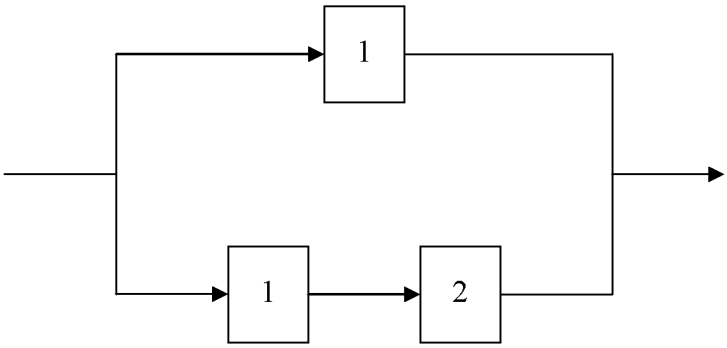

Figure 2.1.3: *Representation of an irrelevant component*

Clearly, the state in which the system either functions or is failed depends entirely on the state of component c_1.

Definition 2.1.7: *Monotone (Coherent) Systems*

A system with structure function ϕ is said to be monotone (coherent) if:

i. each component c_i in the system is relevant

ii. ϕ is non-decreasing i.e. $\phi(0_i, \mathbf{x}) \leq \phi(1_i, \mathbf{x})$ for all component c_i, $i \in I$, and possible state vectors **x**.

Once again, by enumerating we see that the system given in Figure 1.3.1 is monotone.

Throughout the remainder of the dissertation, we will assume that all systems are monotone.

Corollary 2.1.8:

From Definition 2.1.7, it can be shown that a) $\phi(\mathbf{0}) = 0$ b) $\phi(\mathbf{1}) = 1$

Proof:

a) Suppose that $\phi(\mathbf{0}) = 1$. Since ϕ is non-decreasing, we have that $\phi(0_i, \mathbf{x}) = \phi(1_i, \mathbf{x}) = 1$ for all $\mathbf{x}$ and $i \in I$. This contradicts the fact that component c_i is relevant, hence $\phi(\mathbf{0}) = 0$

b) Suppose that $\phi(\mathbf{1}) = 0$. Since ϕ is non-decreasing, we have that $\phi(0_i, \mathbf{x}) = \phi(1_i, \mathbf{x}) = 0$ for all $\mathbf{x}$ and $i \in I$. This contradicts the fact that component c_i is relevant and hence $\phi(\mathbf{1}) = 1$.

Direct evaluation of (2.1.1) at **0** and **1** shows these results.

We have that the structure function of most systems can be represented as a combination of series and parallel structure functions. However when this is not the case and we require the structure function of system, we can use the following lemma:

Lemma 2.1.9: *Pivot Decomposition of the Structure Function*

For any component c_i within a system with structure function ϕ we have:

$$\phi(\mathbf{x}) = x_i \phi(1_i, \mathbf{x}) + \bar{x}_i \phi(0_i, \mathbf{x}) \qquad (2.1.2)$$

Proof:

We have that $\phi(\mathbf{x}) = \begin{cases} \phi(1_i, \mathbf{x}) & \text{for} \quad x_i = 1 \\ \phi(0_i, \mathbf{x}) & \text{for} \quad x_i = 0 \end{cases}$.

Hence $\phi(\mathbf{x}) = x_i\phi(1_i, \mathbf{x}) + (1 - x_i)\phi(0_i, \mathbf{x}) = x_i\phi(1_i, \mathbf{x}) + \bar{x}_i\phi(0_i, \mathbf{x})$.

For our hi-fi system, we can clearly see that $\phi(1_3, \mathbf{x}) = x_1x_2$, $\phi(0_3, \mathbf{x}) = x_1x_2x_4$, $\phi(1_2, \mathbf{x}) = x_1(1 - \bar{x}_3\bar{x}_4)$ and $\phi(0_2, \mathbf{x}) = 0$,. By applying the pivotal decomposition we obtain that

$x_3\phi(1_3, \mathbf{x}) + \bar{x}_3\phi(1_3, \mathbf{x}) = x_1x_2x_3 + x_1x_2\bar{x}_3x_4 = x_1x_2(x_3 + x_4 - x_3x_4) = x_1x_2(1 - \bar{x}_3\bar{x}_4) = \phi(\mathbf{x})$
and $x_2\phi(1_2, \mathbf{x}) + \bar{x}_2\phi(0_2, \mathbf{x}) = x_1x_2(1 - \bar{x}_3\bar{x}_4) = \phi(\mathbf{x})$.

Lemma 2.1.10:

$$\phi(\mathbf{x}) = x_i\delta_i(\phi, \mathbf{x}) + \phi(0_i, \mathbf{x}) \tag{2.1.3}$$

$$\text{where } \delta_i(\phi, \mathbf{x}) = \phi(1_i, \mathbf{x}) - \phi(0_i, \mathbf{x}) = \frac{\partial\phi(\mathbf{x})}{\partial x_i} \tag{2.1.4}$$

Proof:

From Lemma 2.1.9, we have that

$$\begin{aligned} \phi(\mathbf{x}) &= x_i\phi(1_i, \mathbf{x}) + \bar{x}_i\phi(0_i, \mathbf{x}) = x_i\phi(1_i, \mathbf{x}) + (1 - x_i)\phi(0_i, \mathbf{x}) \\ &= x_i\{\phi(1_i, \mathbf{x}) - \phi(0_i, \mathbf{x})\} + \phi(0_i, \mathbf{x}) = x_i\delta_i(\phi, \mathbf{x}) + \phi(0_i, \mathbf{x}) \end{aligned}$$

Furthermore $\frac{\partial\phi(\mathbf{x})}{\partial x_i} = \frac{\partial}{\partial x_i}\{x_i\phi(1_i, \mathbf{x}) + (1 - x_i)\phi(0_i, \mathbf{x})\} = \phi(1_i, \mathbf{x}) - \phi(0_i, \mathbf{x})$.

It should be noted in Lemma 2.1.9 and Lemma 2.1.10 that $\phi(1_i, \mathbf{x})$, $\phi(0_i, \mathbf{x})$ and therefore $\delta_i(\phi, \mathbf{x})$ do not depend on the state that component c_i is in.

For our audio playback system we have $\delta_3(\phi, \mathbf{x}) = x_1x_2 - x_1x_2x_4 = x_1x_2\bar{x}_4$ and $\delta_2(\phi, \mathbf{x}) = x_1(1 - \bar{x}_3\bar{x}_4)$.

Moreover, $\delta_i(\phi, \mathbf{x})$ allows for an alternative definition of the relevance of components.

Definition 2.1.11: *Relevant Components and Critical State Vectors*
We say that component c_i is a relevant component in a system with structure function $\phi(\mathbf{x})$ if $\delta_i(\phi, \mathbf{x}) = 1$ for some state vector $\mathbf{x}$ i.e. for a given state of a system, a change in the state of component c_i will lead to a change in the state of the system. The state vector $\mathbf{x}$ for which $\delta_i(\phi, \mathbf{x}) = 1$ is called a relevant, or critical, state vector.

For state vector ${}_{15}\mathbf{x} = (1,1,1,0)$ we have that both $\delta_2(\phi, {}_{15}\mathbf{x})$ and $\delta_3(\phi, {}_{15}\mathbf{x})$ are equal to one and hence, by the symmetry between components 1 and 2 as well as components 3 and 4 respectively, we have that both $\delta_1(\phi, {}_{14}\mathbf{x})$ and $\delta_4(\phi, {}_{14}\mathbf{x})$ are equal to one where ${}_{14}\mathbf{x} = (1,1,0,1)$. Therefore, all components of the hi-fi system are relevant.

Definition 2.1.12: *System Availability*
The availability of a system with structure function $\phi(\mathbf{x})$ is defined as:

$$h_\phi(\mathbf{p}) = \Pr[\phi(\mathbf{x}) = 1 \mid \mathbf{p}] = E[\phi(\mathbf{x}) \mid \mathbf{p}] \qquad (2.1.5)$$

$h_\phi(\mathbf{p})$ is sometimes referred to as the reliability function of the system and we will use $h_\phi(1_i, \mathbf{p})$ to signify the system availability when component c_i is functioning whilst $h_\phi(0_i, \mathbf{p})$ signifies the system availability when component c_i is failed, both of which occur under a system with structure function ϕ and vector of component availabilities $\mathbf{p}$.

So for our hi-fi system, we will have that $h_\phi(\mathbf{p}) = E[\phi(\mathbf{x}) \mid \mathbf{p}] = E[x_1 x_2 (1 - \bar{x}_3 \bar{x}_4)]$ and by the independence of each component, we obtain

$$h_\phi(\mathbf{p}) = E[x_1 \mid \mathbf{p}]E[x_2 \mid \mathbf{p}](1 - E[\bar{x}_3 \mid \mathbf{p}]E[\bar{x}_4 \mid \mathbf{p}])$$

Since $E[x_i \mid \mathbf{p}] = p_i$ and $E[\bar{x}_i \mid \mathbf{p}] = q_i$, we have $h_\phi(\mathbf{p}) = p_1 p_2 (1 - q_3 q_4)$.

Proceeding with a similar argument, we find that

$h_\phi(1_2, \mathbf{p}) = E[\phi(1_2, \mathbf{x}) \mid \mathbf{p}] = p_1(1 - q_3 q_4)$, $h_\phi(0_2, \mathbf{p}) = E[\phi(0_2, \mathbf{x}) \mid \mathbf{p}] = 0$,

$h_\phi(1_3, \mathbf{p}) = E[\phi(1_3, \mathbf{x}) \mid \mathbf{p}] = p_1 p_2 p_4$ and $h_\phi(1_3, \mathbf{p}) = E[\phi(1_3, \mathbf{x}) \mid \mathbf{p}] = p_1 p_2$.

An alternative method of obtaining $h_\phi(1_i, \mathbf{p})$ and $h_\phi(0_i, \mathbf{p})$ would be to assume that the availability of component c_i becomes one or zero respectively in the system availability function i.e. $h_\phi(\mathbf{p})\big|_{p_i=1} = h_\phi(1_i, \mathbf{p})$ and $h_\phi(\mathbf{p})\big|_{p_i=0} = h_\phi(0_i, \mathbf{p})$

Lemma 2.1.13: *Pivot Decomposition of System Availability*

For any component c_i within a system with structure function ϕ and vector of component availabilities **p**, we have that:

$$h_\phi(\mathbf{p}) = p_i h_\phi(1_i, \mathbf{p}) + q_i h_\phi(0_i, \mathbf{p}) \qquad (2.1.6)$$

Proof:

By Definition 2.1.12 and Lemma 2.1.9 we have

$$h_\phi(\mathbf{p}) = E[\phi(\mathbf{x}) \mid \mathbf{p}] = E[x_i \phi(1_i, \mathbf{x}) + \bar{x}_i \phi(0_i, \mathbf{x}) \mid \mathbf{p}]$$

As $\phi(1_i, \mathbf{x})$ and $\phi(0_i, \mathbf{x})$ do not depend on x_i and since all components are independent of each other $h_\phi(\mathbf{p}) = E[x_i]E[\phi(1_i, \mathbf{x})] + E[\bar{x}_i]E[\phi(0_i, \mathbf{x})]$ where the expectations are taken conditionally on **p**. Since x_i is a binary random variable, its expectation is equal to p_i. Subsequently, by the definitions of $h_\phi(1_i, \mathbf{p})$ and $h_\phi(0_i, \mathbf{p})$ we have the required result.

The pivot decomposition of system availability is used in the same manner as the pivot decomposition of the structure function.

Lemma 2.1.14:

$$h_\phi(\mathbf{p}) = p_i E\left[\delta_i(\phi,\mathbf{x})\right] + h_\phi(0_i,\mathbf{p}) \qquad (2.1.7)$$

and hence $\partial h_\phi(\mathbf{p})/\partial p_i = E\left[\delta_i(\phi,\mathbf{x})\right]$ (2.1.8)

Proof:

From (2.1.5) and (2.1.3) we obtain that $h_\phi(\mathbf{p}) = E\left[x_i\delta_i(\phi,\mathbf{x}) + \phi(0_i,\mathbf{x})\right]$. Since x_i and $\delta_i(\phi,\mathbf{x})$ are independent and by the definition of $h_\phi(0_i,\mathbf{p})$ we obtain (2.1.7). Differentiating (2.1.7) with respect to p_i yields (2.1.8).

Lemma 2.1.15:

$h_\phi(\mathbf{p})$ is non-decreasing and bounded between 0 and 1 i.e. $h_\phi(0_i,\mathbf{p}) \le h_\phi(1_i,\mathbf{p})$ for all components c_i and possible state vectors $\mathbf{p}$ with $0 \le h_\phi(\mathbf{p}) \le 1$.

Proof:

By the pivot decomposition of system availability and the definition of system availability, we have $\dfrac{\partial h_\phi(\mathbf{p})}{\partial p_i} = h_\phi(1_i,\mathbf{p}) - h_\phi(0_i,\mathbf{p}) = E\left[\phi((1_i,\mathbf{x})) - \phi((0_i,\mathbf{x}))\right]$.

As ϕ is a non-decreasing function of $\mathbf{x}$ bounded between 0 and 1, we have that $\dfrac{\partial h_\phi(\mathbf{p})}{\partial p_i} \ge 0$ and hence our required results follow.

Lemma 2.1.16:

$h_\phi(\mathbf{p})$ is increasing in each p_i for $i = 1,2,\ldots,n-1,n$

Proof:

Let $\mathbf{p} = (p_1, p_2, \ldots, p_{n-1}, p_n)$ and $\mathbf{p}^* = (p_1, p_2, \ldots p_{i-1}, p_i^*, p_{i+1}, \ldots, p_{n-1}, p_n)$ where $p_i^* > p_i$ for some $i \in I$. By (2.1.7) and the fact that $E\left[\delta_i(\phi,\mathbf{x})\right]$ and $h_\phi(0_i,\mathbf{p})$ does

not depend on p_i , we have that $h_\phi(\mathbf{p})$ is increasing in p_i since

$h_\phi(\mathbf{p}^*) = p_i^* E[\delta_i(\phi, \mathbf{x})] + h_\phi(0_i, \mathbf{p}) > p_i E[\delta_i(\phi, \mathbf{x})] + h_\phi(0_i, \mathbf{p}) = h_\phi(\mathbf{p})$.

Definition 2.1.17: *Path Vectors and Path Sets*

A state vector **x** is called a path vector of a system with structure function ϕ if the system is functioning when **x** occurs i.e. $\phi(\mathbf{x}) = 1$. We shall denote the lth path vector by ${}^{\phi}P_l$ and in the case where component c_i is functioning whilst forming part of ${}^{\phi}P_l$, we shall use the notation ${}^{\phi}P_l(i)$. The index set of functioning components within a path vector ${}^{\phi}P_l$ is called the corresponding path set and is denoted by ${}^{\phi}PS_l$ (${}^{\phi}PS_l(i)$ if it contains c_i).

Definition 2.1.18: *Cut Vectors and Cut Sets*

A state vector **x** is called a cut vector of a system with structure function ϕ if the system is failed when **x** occurs i.e. $\phi(\mathbf{x}) = 0$. We shall denote the lth cut vector by ${}^{\phi}C_l$ and in the case where component c_i is failed whilst forming part of ${}^{\phi}C_l$, we shall use the notation ${}^{\phi}C_l(i)$. The index set of functioning components within a cut vector ${}^{\phi}C_l$ is called the corresponding cut set and is denoted by ${}^{\phi}CS_l$ (${}^{\phi}CS_l(i)$ if it contains c_i).

Clearly, as $\phi(\mathbf{x})$ is a binary random variable, we see that the collection of all path and cut vectors make up the collection of all the possible state vectors of the system.

Definition 2.1.19: *Minimal Path Vectors and Minimal Path Sets*

A path vector **x** is said to be minimal if we have that $\phi(\mathbf{z}) = 0$ for all state vectors $\mathbf{z} < \mathbf{x}$ i.e. if any one of the functioning components were to fail, the whole system would then fail. We shall denote the jth minimal path vector by ${}^{\phi}P_j^m$ and in the case where component c_i is functioning whilst forming part of ${}^{\phi}P_j^m$, we shall use

the notation ${}^{\phi}P_j^m(i)$. The index set of functioning components within a minimal path vector ${}^{\phi}P_j^m$ is called the corresponding path set and is denoted by ${}^{\phi}PS_j^m$ (${}^{\phi}PS_j^m(i)$ if it contains c_i).

Definition 2.1.20: *Minimal Cut Vectors and Minimal Cut Sets*

A cut vector **x** is said to be minimal if we have that $\phi(\mathbf{z}) = 1$ for all state vectors $\mathbf{z} > \mathbf{x}$ i.e. if any one of the failed components within state vector **x** were to be restored to a functioning state, the whole system would be restored to a functioning state. We shall denote the jth minimal cut vector by ${}^{\phi}C_j^m$ and in the case where component c_i is failed whilst forming part of ${}^{\phi}C_j^m$, we shall use the notation ${}^{\phi}C_j^m(i)$. The index set of functioning components within a minimal cut vector ${}^{\phi}C_j^m$ is called the corresponding cut set and is denoted by ${}^{\phi}CS_j^m$ (${}^{\phi}CS_j^m(i)$ if it contains c_i).

For our hi-fi system in Figure 1.1, we have that ${}_{14}\mathbf{x} = (1,1,0,1)$, ${}_{15}\mathbf{x} = (1,1,1,0)$ and ${}_{16}\mathbf{x} = (1,1,1,1)$ are path vectors with ${}_{14}\mathbf{x}$ and ${}_{15}\mathbf{x}$ being minimal path vectors ${}^{\phi}P_1^m$ and ${}^{\phi}P_2^m$. The corresponding minimal path sets of ${}_{14}\mathbf{x}$ and ${}_{15}\mathbf{x}$ are ${}^{\phi}PS_1^m = \{1,2,4\}$ and ${}^{\phi}PS_2^m = \{1,2,3\}$ respectively. The minimal cut vectors are ${}^{\phi}C_1^m = {}_{11}\mathbf{x} = (1,1,0,0)$, ${}^{\phi}C_2^m = {}_{12}\mathbf{x} = (0,1,1,1)$ and ${}^{\phi}C_3^m = {}_{13}\mathbf{x} = (1,0,1,1)$ with matching cut sets ${}^{\phi}CS_1^m = \{3,4\}$, ${}^{\phi}CS_2^m = \{1\}$ and ${}^{\phi}CS_3^m = \{2\}$.

Definition 2.1.21: *Critical Path Vectors and Critical Path Sets*

Let **x** be a critical state vector for a system with structure function ϕ. It follows that $\phi(1_i, \mathbf{x}) = 1$. Hence, we call $(1_i, \mathbf{x})$ a critical path vector of the system for component c_i. The index set of components which are functioning in $(1_i, \mathbf{x})$ is called the corresponding critical path set.

For our audio playback system, we have that ${}_{14}\mathbf{x}$, ${}_{15}\mathbf{x}$ and ${}_{16}\mathbf{x}$ represent critical path vectors for component c_2 with corresponding critical path sets $\{1,2,4\}$, $\{1,2,3\}$ and $\{1,2,3,4\}$ whilst ${}_{15}\mathbf{x}$ and ${}_{16}\mathbf{x}$ also represent critical path vectors for component c_3 with corresponding critical path sets $\{1,2,3\}$ and $\{1,2,3,4\}$.

Definition 2.1.22: *Critical Cut Vectors and Critical Cut Sets*

Let $\mathbf{x}$ be a critical state vector for a system with structure function ϕ. It follows that $\phi(0_i,\mathbf{x})=0$. Hence, we call $(0_i,\mathbf{x})$ a critical cut vector of the system for component c_i. The index set of failed components in $(0_i,\mathbf{x})$ is called the corresponding critical cut set.

Thus, for the audio playback system, it follows that the critical cut vectors for component c_2 are ${}_1\mathbf{x}$, ${}_2\mathbf{x}$, ${}_3\mathbf{x}$, ${}_5\mathbf{x}$, ${}_6\mathbf{x}$, ${}_8\mathbf{x}$, ${}_{10}\mathbf{x}$, and ${}_{13}\mathbf{x}$ whilst for component c_3 are ${}_1\mathbf{x}$, ${}_2\mathbf{x}$, ${}_4\mathbf{x}$, ${}_5\mathbf{x}$, ${}_7\mathbf{x}$, ${}_8\mathbf{x}$, and ${}_{11}\mathbf{x}$.

Theorem 2.1.23:

Every component within a monotone system ϕ must form part of at least one minimal path set (vector) and minimal cut set (vector).

Proof:

Suppose that component c_i does not form part of any minimal path set. Then, by Definition 2.1.19, there does not exist a state vector $\mathbf{x}$ with $x_i=1$ such that $\phi(\mathbf{x})=1$ and $\phi(\mathbf{z})=0$ for $\mathbf{z}<\mathbf{x}$. In particular, there does not exist state vector $\mathbf{x}$ such that $\phi(1_i,\mathbf{x})=1$ and $\phi(0_i,\mathbf{x})=0$. Hence $\phi(1_i,\mathbf{x})\le\phi(0_i,\mathbf{x})$ for all state vectors x. This contradicts the fact that ϕ is monotone. Therefore our supposition is false. Similarly, we can assume that component c_i does not form part of any minimal cut set. Then, by Definition 2.1.20, there does not exist a state vector $\mathbf{x}$ with $x_i=0$ such that $\phi(\mathbf{x})=0$ and $\phi(\mathbf{z})=1$ for $\mathbf{x}<\mathbf{z}$. In particular, there does not exist state vector $\mathbf{x}$ such that $\phi(1_i,\mathbf{x})=1$ and $\phi(0_i,\mathbf{x})=0$. Hence $\phi(1_i,\mathbf{x})\le\phi(0_i,\mathbf{x})$ for

all state vectors **x**. Again, contradicts the fact that ϕ is monotone and therefore our supposition is false.

Definition 2.1.24: *Minimal Path Series Structures*

Suppose a system with structure function ϕ has ${}^{\phi}u$ minimal path sets ${}^{\phi}PS_j^m$ for $j = 1,2,\ldots,{}^{\phi}u - 1, {}^{\phi}u$. For state vector **x**, we call

$$ {}^{\phi}\rho_j(\mathbf{x}) = \bigwedge_{i \in {}^{\phi}PS_j^m} x_i = \coprod_{i \in {}^{\phi}PS_j^m} x_i \qquad (2.1.9) $$

the minimal path series structure of the system.

We note that ${}^{\phi}\rho_j(\mathbf{x}) = 1$ if and only if each component c_i, $i \in {}^{\phi}PS_j^m$, is in a functioning state.

Subsequently, as ${}^{\phi}PS_1^m = \{1,2,4\}$ and ${}^{\phi}PS_2^m = \{1,2,3\}$ for our audio playback system, it follows that ${}^{\phi}\rho_1(\mathbf{x}) = x_1x_2x_4$ and ${}^{\phi}\rho_2(\mathbf{x}) = x_1x_2x_3$.

Definition 2.1.25: *Minimal Cut Parallel Structures*

Let a system with structure function ϕ have ${}^{\phi}v$ minimal cut sets ${}^{\phi}CS_j^m$ for $j = 1,2,\ldots,{}^{\phi}v - 1, {}^{\phi}v$. For state vector **x**, we call

$$ {}^{\phi}\kappa_j(\mathbf{x}) = \bigvee_{i \in {}^{\phi}CS_j^m} x_i = \coprod_{i \in {}^{\phi}CS_j^m} x_i = 1 - \prod_{i \in {}^{\phi}CS_j^m} \bar{x}_i \qquad (2.1.10) $$

the minimal cut parallel structures of the system.

As ${}^{\phi}CS_1^m = \{3,4\}$, ${}^{\phi}CS_2^m = \{1\}$ and ${}^{\phi}CS_3^m = \{2\}$, we have that ${}^{\phi}\kappa_1(\mathbf{x}) = 1 - \bar{x}_3\bar{x}_4$, ${}^{\phi}\kappa_2(\mathbf{x}) = x_1$ and ${}^{\phi}\kappa_3(\mathbf{x}) = x_2$.

Lemma 2.1.26: *Minimal Path Set Representation of the Structure Function*

Suppose a system with structure function ϕ has ${}^{\phi}u$ minimal path sets ${}^{\phi}PS_j^m$ for $j = 1,2,\ldots,{}^{\phi}u-1,{}^{\phi}u$, then

$$\phi(\mathbf{x}) = \bigvee_{j=1}^{{}^{\phi}u} {}^{\phi}\rho_j(\mathbf{x}) = \coprod_{j=1}^{{}^{\phi}u} \prod_{i \in {}^{\phi}PS_j^m} x_i = 1 - \prod_{j=1}^{{}^{\phi}u} \left(1 - \prod_{i \in {}^{\phi}PS_j^m} x_i\right) \qquad (2.1.11)$$

Proof:

For our system to be in a functioning state, we require at least one minimal path set to be functioning i.e. if ${}^{\phi}\rho_j(\mathbf{x}) = 1$ for some j then $\phi(\mathbf{x}) = 1$. The disjunctive Boolean operator on ${}^{\phi}\rho_j(\mathbf{x})$ satisfies this condition and hence our result follows.

We note that (2.1.11) is also known as the Disjunctive Normal Form of ϕ.

So from (2.1.11), it follows for our audio playback system we have that $\phi(\mathbf{x}) = \bigvee_{j=1}^{{}^{\phi}u} {}^{\phi}\rho_j(\mathbf{x}) = 1 - (1 - x_1x_2x_4)(1 - x_1x_2x_3)$ which will reduce down to the already familiar form $\phi(\mathbf{x}) = x_1x_2(1 - \bar{x}_3\bar{x}_4)$ by noting that each x_i is an indicator variable i.e. $x_i^2 = x_i$.

Lemma 2.1.27: *Minimal Cut Set Representation of the Structure Function*

Suppose a system with structure function ϕ has ${}^{\phi}v$ minimal cut sets ${}^{\phi}CS_j^m$ for $j = 1,2,\ldots,{}^{\phi}v-1,{}^{\phi}v$, then

$$\phi(\mathbf{x}) = \bigwedge_{j=1}^{{}^{\phi}v} {}^{\phi}\kappa_j(\mathbf{x}) = \prod_{j=1}^{{}^{\phi}v} \coprod_{i \in {}^{\phi}CS_j^m} x_i = \prod_{j=1}^{{}^{\phi}v} \left(1 - \prod_{i \in {}^{\phi}CS_j^m} \bar{x}_i\right) \qquad (2.1.12)$$

Proof:

For our system to be in a failed state, we require that at least one minimal cut set is in a failed state i.e. if ${}^{\phi}\kappa_j(\mathbf{x}) = 0$ for some j then $\phi(\mathbf{x}) = 0$. The conjunctive Boolean operator on ${}^{\phi}\kappa_j(\mathbf{x})$ satisfies this restriction and so (2.1.12) follows.

Equation (2.1.12) is also called the Conjunctive Normal Form of ϕ.

Again, for our audio system, it follows that $\phi(\mathbf{x}) = \bigwedge_{j=1}^{{}^{\phi}v} {}^{\phi}\kappa_j(\mathbf{x}) = x_1 x_2 (1 - \bar{x}_3 \bar{x}_4)$.

2.2 Modular Decomposition of Monotone Systems

We already noted that our hi-fi system consisted of two speakers working in parallel to each other and in series with the rest of the system. For the design and functionality of the system, we could treat the speakers purely as a subsystem, or module, of our hi-fi system. Furthermore, it is of interest to determine how this module will interact with the rest of the system in terms of availability and importance to the hi-fi system.

Definition 2.2.1: *Module of a System*
A module is a set of components that constitute a subsystem (in terms of design and functionality) of an entire system.

We can define similar quantities for modules within a system as we did under monotone systems of components. This is done by treating each module as if it were a single component in Section 2.1 and hence, most proofs of the lemmas below follow directly from the equivalent lemmas found for components in Section 2.1.

Suppose we have a system of n components that form m modules. Denote each module by m_k for $k = 1,2,\ldots,m$ and let there be n_k components in module m_k. Define the binary indicator (Boolean) random variable:

$$y_k = \begin{cases} 1 & \text{when module } m_k \text{ is functioning} \\ 0 & \text{when module } m_k \text{ is failed} \end{cases}$$

Let $\mathbf{y} = (y_1, y_2, \ldots, y_m)$ be the state vector of the system and, for a given realisation of the system, $\mathbf{y}$ represents the state that each module m_k is in. As each module m_k is made up of several components, we can define the state vector $\mathbf{x}_k = y_k(\mathbf{x})$ which expresses the state of each component c_i found in module m_k and thus we have $\mathbf{y} = (\mathbf{x}_1, \mathbf{x}_2, \ldots, \mathbf{x}_m)$. $(\mathbf{1}_k, \mathbf{y})$ will denote the state vector where module m_k is functioning whilst $(\mathbf{0}_k, \mathbf{y})$ the state vector where module m_k is failed.

For our example, we could treat the audio player, amplifier and the speakers as modules m_1, m_2 and m_3 respectively as in the diagram below:

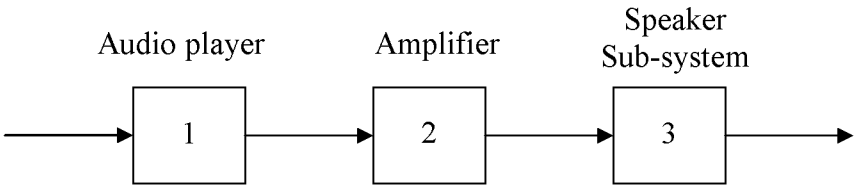

Figure 2.2.1: *Representation of audio playback system with speaker module*

We therefore now have the following possible state vectors:

$$
\begin{array}{llll}
{}_1\mathbf{y} = (0,0,0) & {}_2\mathbf{y} = (0,0,1) & {}_3\mathbf{y} = (0,1,0) & {}_4\mathbf{y} = (1,0,0) \\
{}_5\mathbf{y} = (0,1,1) & {}_6\mathbf{y} = (1,0,1) & {}_7\mathbf{y} = (1,1,0) & {}_8\mathbf{y} = (1,1,1)
\end{array}
$$

Also we have $y_1(\mathbf{x}) = \mathbf{x}_1 = x_1$, $y_2(\mathbf{x}) = \mathbf{x}_2 = x_2$ and $y_3(\mathbf{x}) = \mathbf{x}_3 = (x_3, x_4)$

Within each module m_k, we can define the structure function $\phi_k(\mathbf{x}_k)$ of the module's constituent components and hence we have that $y_k = \phi_k(\mathbf{x}_k)$.

Thus, we have $\phi_1(\mathbf{x}_1) = x_1$, $\phi_2(\mathbf{x}_2) = x_2$ and $\phi_3(\mathbf{x}_3) = (1 - \bar{x}_3\bar{x}_4)$ for the hi-fi system.

Definition 2.2.2: *Structure Function of a System with Modules*

For a known state vector **y**, the structure function ψ of a system containing modules is m_k for $k = 1,2,\ldots,m$ is:

$$\psi(\mathbf{y}) = \psi\left(\phi_1(\mathbf{x}_1), \phi_2(\mathbf{x}_2), \ldots, \phi_m(\mathbf{x}_m)\right) \qquad (2.2.1)$$

where ψ is either zero (when the system is failed) or one (when the system is functioning).

We observe that for any given system, $\psi(\mathbf{y}) = \phi(\mathbf{x})$ i.e. the availability of a system can be expressed in terms of the availabilities of each component constituting the system or in terms of the system's modules, which in turn are formed by the components.

From Figure 2.2.1, we can determine that

$$\psi(\mathbf{y}) = y_1 y_2 y_3 = \phi_1(\mathbf{x}_1)\phi_2(\mathbf{x}_2)\phi_3(\mathbf{x}_3) = x_1 x_2 (1 - \bar{x}_3 \bar{x}_4) = \phi(\mathbf{x}).$$

Definition 2.2.3: *Irrelevant Modules*

A module m_k is said to be irrelevant if $\psi(\mathbf{1}_k, \mathbf{y}) = \psi(\mathbf{0}_k, \mathbf{y})$ for all possible state vectors **y**. If this does not occur then module m_k is said to be relevant.

It can be easily verified that all modules in Figure 2.1.1 are indeed relevant.

Lemma 2.2.4: *Monotone Systems with Modules*

A system with *m* modules and structure function ψ is said to be monotone if:

i. each ϕ_k is monotone.
ii. each module m_k is relevant.
iii. ψ is non-decreasing for all possible state vectors $\mathbf{x}_k$ and module m_k.

Proof:

For ψ to be monotone, we need to satisfy the conditions stipulated in Definition 2.1.7. Now, as each ϕ_k is monotone and each module m_k is relevant, we have that

all components c_i in the system are relevant and hence condition i. of Definition 2.1.7 is satisfied. Also, as ψ is non-decreasing in terms of ϕ_k and state vector $\mathbf{y}$, coupled with the fact that each ϕ_k is monotone, condition ii. of Definition 2.1.7 is satisfied as we have that ψ is non-decreasing in terms of all components c_i and state vectors $\mathbf{y}$.

As a consequence of Lemma 2.2.4 and Corollary 2.1.8, we have that $\psi(\mathbf{0}) = 0$ and $\psi(\mathbf{1}) = 1$.

With the proof of Lemma 2.2.4 complete and by the use of Definition 2.2.2 and 2.2.3, the proofs of Lemma 2.2.5, Lemma 2.2.6 and Lemma 2.2.9 follow in the same vein as the proofs of Lemma 2.1.9, Lemma 2.1.10 and Lemma 2.1.13 respectively.

Lemma 2.2.5: *Pivot Decomposition of a Structure Function with Modules*
For any module m_k within a system of modules with structure function ψ under state vector $\mathbf{y}$, we have:

$$\psi(\mathbf{y}) = \phi_k(\mathbf{x}_k)\psi(\mathbf{1}_k, \mathbf{y}) + (1 - \phi_k(\mathbf{x}_k))\psi(\mathbf{0}_k, \mathbf{y}) \qquad (2.2.2)$$

Conducting a pivot decomposition with respect to module m_3 of our hi-fi system we have $\psi(\mathbf{y}) = y_3\psi(\mathbf{1}_k, \mathbf{y}) + \bar{y}_3\psi(\mathbf{0}_k, \mathbf{y}) = y_3(y_1 y_2) + \bar{y}_3(0) = y_3 x_1 x_2$.

Lemma 2.2.6:

$$\psi(\mathbf{y}) = \phi_k(\mathbf{x}_k)\delta_k(\psi, \mathbf{y}) + \psi(\mathbf{0}_k, \mathbf{y}) \qquad (2.2.3)$$

$$\text{where } \delta_k(\psi, \mathbf{y}) = \psi(\mathbf{1}_k, \mathbf{y}) - \psi(\mathbf{0}_k, \mathbf{y}) = \frac{\partial\psi(\mathbf{y})}{\partial y_k} = \frac{\partial\psi(\mathbf{y})}{\partial\phi_k(\mathbf{x}_k)} \qquad (2.2.4)$$

The equivalent definition of Definition 2.1.11 for a system with modules is:

Definition 2.2.7: *Relevant Modules*

Module m_k is relevant for a system of modules with structure function ψ if $\delta_k(\psi, \mathbf{y}) = 1$ for some state vector $\mathbf{y}$.

Given that we have probability vector $\mathbf{p}$ of known values of the availabilities of each component c_i of the system, we have that the probability of module m_k being in a functional state is $\Pr[y_k = 1 \mid \mathbf{p}] = \Pr[\phi_k(\mathbf{x}_k) = 1 \mid \mathbf{p}] = h_{\phi_k}(\mathbf{p})$ since $y_k = \phi_k(\mathbf{x}_k)$. We will use the shorthand $\mathbf{p}_k$ to denote $h_{\phi_k}(\mathbf{p})$.

For Figure 2.2.1, we have that $\mathbf{p}_1 = p_1$, $\mathbf{p}_2 = p_2$ and $\mathbf{p}_3 = 1 - q_3 q_4$.

We are now in a position to define system availability as:

Definition 2.2.8: *System Availability with Modules*

The availability of a system with structure function $\psi(\mathbf{y})$ is:

$$h_\psi(\mathbf{p}) = \Pr[\psi(\mathbf{y}) = 1 \mid \mathbf{p}] = E[\psi(\mathbf{y}) \mid \mathbf{p}] \qquad (2.2.5)$$

and is a function of $h_{\phi_k}(\mathbf{p})$, the availability of module m_k.

We can note that, due to the equivalence between ψ and ϕ, $h_\psi(\mathbf{p}) = h_\phi(\mathbf{p})$.

Analogous to before, we will identify $h_\psi(\mathbf{1}_k, \mathbf{p})$ with the system availability when module m_k is functioning and $h_\psi(\mathbf{0}_k, \mathbf{p})$ with the system availability when module m_k is failed.

For our modularised audio playback system, $h_\psi(\mathbf{p}) = \mathbf{p}_1\mathbf{p}_2\mathbf{p}_3 = p_1 p_2 (1 - q_3 q_4)$, $h_\psi(\mathbf{1}_3, \mathbf{p}) = \mathbf{p}_1\mathbf{p}_2 = p_1 p_2$, $h_\psi(\mathbf{0}_3, \mathbf{p}) = 0$ and $h_{\phi_3}(\mathbf{p}) = \mathbf{p}_3 = 1 - q_3 q_4$.

Lemma 2.2.9: *Pivot Decomposition of System Availability with Modules*

For any module m_k within a system of modules with structure function ψ under state vector **y**, we have:

$$h_\psi(\mathbf{p}) = \mathbf{p}_k h_\psi(\mathbf{1}_k, \mathbf{p}) + \mathbf{q}_k h_\psi(\mathbf{0}_k, \mathbf{p}) \qquad (2.2.6)$$

where $\mathbf{q}_k = 1 - \mathbf{p}_k$.

Therefore, applying Lemma 2.2.9 to our hi-fi system we obtain

$\mathbf{p}_3 h_\psi(\mathbf{1}_3, \mathbf{p}) + \mathbf{q}_3 h_\psi(\mathbf{0}_3, \mathbf{p}) = \mathbf{p}_3(\mathbf{p}_1\mathbf{p}_2) + \mathbf{q}_3(0) = h_\psi(\mathbf{p})$.

Path, minimal path, cut and minimal cut vectors and sets for system with modules are defined analogously as for system with components.

The minimal path (cut) vector(s) for our modularised audio playback system are ${}_8\mathbf{y}$ (${}_5\mathbf{y}$, ${}_6\mathbf{y}$ and ${}_7\mathbf{y}$) with minimal path (cut) vector(s) ${}^{\psi}PS_1^m = \{1,2,3\}$ (${}^{\psi}CS_1^m = \{1\}$, ${}^{\psi}CS_2^m = \{2\}$ and ${}^{\psi}CS_3^m = \{3\}$)

2.3 The Dual of a System

Definition 2.3.1: *The Dual of a System*

For a system with structure function ϕ, the dual of the system, denoted ϕ^D, is defined as:

$$\phi^D(\bar{\mathbf{x}}) = 1 - \phi(\mathbf{x}) \qquad (2.3.1)$$

where $\bar{\mathbf{x}} = (\bar{x}_1, \bar{x}_2, \ldots, \bar{x}_{n-1}, \bar{x}_n)$.

A consequence of this definition is that functioning (failed) components under ϕ become failed (functioning) components under ϕ^D.

To illustrate this, consider a series system comprising *n* components. We have seen that the structure function of series system is $\phi(\mathbf{x}) = \prod_{i=1}^{n} x_i$. Now, the dual is

$\phi^D(\mathbf{x}) = 1 - \prod_{i=1}^{n}(1 - x_i) = \coprod_{i=1}^{n} x_i$ which is the structure function of a parallel system of n components. Also, when the series system is functioning, we know that, by definition, the parallel dual would be failed, with the functioning components of the series system being failed under the parallel system. Thus the component availabilities of the series system are, in fact, the component unavailabilities for the parallel system.

From (2.3.1) we have that dual structure function for our audio playback system is $\phi^D(\overline{\mathbf{x}}) = 1 - \overline{x}_1\overline{x}_2(1 - x_3x_4)$. Thus we can represent our dual system with Figure 2.3.1 below:

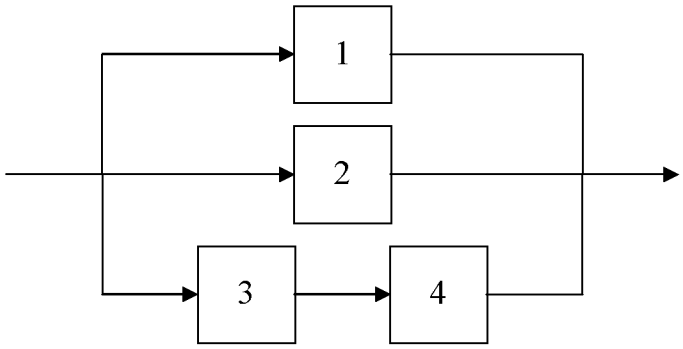

Figure 2.3.1: *Representation of the Dual System for the Audio Playback System*

Definition 2.3.1 allows us to define the dual of a system. However, this does not mean that the dual system actually represents some tangible physical system in the same way as the original system did. Thus, the dual of a system in many instances is constructed solely for computational purposes.

We now describe the various relationships that exist between a system and its dual.

Lemma 2.3.2:

$$\delta_i(\phi^D, \overline{\mathbf{x}}) = \delta_i(\phi, \mathbf{x}) \qquad (2.3.2)$$

Proof:

Using (2.1.4) and (2.3.1) we have that:

$$\begin{aligned}\delta_i\left(\phi^D, \overline{\mathbf{x}}\right) &= \phi^D\left(1_i, \overline{\mathbf{x}}\right) - \phi^D\left(0_i, \overline{\mathbf{x}}\right) \\ &= \left\{1 - \phi\left(0_i, \mathbf{x}\right)\right\} - \left\{1 - \phi\left(1_i, \mathbf{x}\right)\right\} \\ &= \phi\left(1_i, \mathbf{x}\right) - \phi\left(0_i, \mathbf{x}\right) \\ &= \delta_i\left(\phi, \mathbf{x}\right)\end{aligned}$$

Lemma 2.3.3:

If the structure function, ϕ, of a system with n components is monotone, then the dual structure function, ϕ^D, is also monotone.

Proof:

From Definition 2.1.7, we know that each component c_i is relevant under ϕ, and so using Definition 2.1.11 with (2.3.2), we have that each component c_i is also relevant under ϕ^D. Now for two state vectors **x** and **z** and, since ϕ is monotone, we have:

$$\begin{aligned}\overline{\mathbf{x}} \le \overline{\mathbf{z}} \quad &\Rightarrow \quad \overline{x}_i \le \overline{z}_i \quad \forall\, i \in I \\ &\Rightarrow \quad z_i \le x_i \quad \forall\, i \in I \\ &\Rightarrow \quad \mathbf{z} \le \mathbf{x} \\ &\Rightarrow \quad \phi\left(\mathbf{z}\right) \le \phi\left(\mathbf{x}\right) \\ &\Rightarrow \quad 1 - \phi\left(\mathbf{x}\right) \le 1 - \phi\left(\mathbf{z}\right) \\ &\Rightarrow \quad \phi^D\left(\overline{\mathbf{x}}\right) \le \phi^D\left(\overline{\mathbf{z}}\right)\end{aligned}$$

Thus, ϕ^D is non-decreasing, and therefore monotone.

Lemma 2.3.4:

$$h_{\phi^D}\left(\overline{\mathbf{p}}\right) = 1 - h_{\phi}\left(\mathbf{p}\right) \qquad (2.3.3)$$

where $\overline{\mathbf{p}} = \left(q_1, q_2, \ldots, q_{n-1}, q_n\right)$ is the vector of component availabilities under the dual system with structure function ϕ^D.

Proof:

As ϕ^D is a structure function and by the definition of an availability function, we have $h_{\phi^D}(\overline{\mathbf{p}}) = E\left[\phi^D(\overline{\mathbf{x}}) \mid \overline{\mathbf{p}}\right] = E\left[1-\phi(\mathbf{x}) \mid \overline{\mathbf{p}}\right] = 1-E\left[\phi(\mathbf{x}) \mid \mathbf{p}\right] = 1-h_\phi(\mathbf{p})$. Note that conditioning on $\mathbf{p}$ or $\overline{\mathbf{p}}$ is same since fixing the value of each component's availability under the dual structure function ϕ^D is the same as fixing the unavailability of the component under the structure function ϕ.

Therefore, the unavailability of a system is the availability of the dual system and, in the same vein, the availability of a system is the unavailability of the dual system.

For our audio playback system, it follows from (2.3.30 (or alternatively (2.1.5) and (2.3.1)) that $h_{\phi^D}(\overline{\mathbf{p}}) = 1-\overline{q}_1\overline{q}_2(1-\overline{p}_3\overline{p}_4)$.

Lemma 2.3.5: *Pivot Decomposition of System Availability*

For any component c_i within the dual system with structure function ϕ^D under vector of component availabilities $\overline{\mathbf{p}}$, we have:

$$h_{\phi^D}(\overline{\mathbf{p}}) = \overline{p}_i h_{\phi^D}(1_i, \overline{\mathbf{p}}) + (1-\overline{p}_i) h_{\phi^D}(0_i, \overline{\mathbf{p}}) = q_i h_{\phi^D}(1_i, \overline{\mathbf{p}}) + p_i h_{\phi^D}(0_i, \overline{\mathbf{p}}) \quad (2.3.4)$$

Proof:

$$\begin{aligned} h_{\phi^D}(\overline{\mathbf{p}}) &= 1-h_\phi(\mathbf{p}) \\ &= 1-\left\{p_i h_\phi(1_i, \mathbf{p}) + q_i h_\phi(0_i, \mathbf{p})\right\} \\ &= 1-\left\{p_i\left(1-h_{\phi^D}(0_i, \overline{\mathbf{p}})\right) + q_i\left(1-h_{\phi^D}(1_i, \overline{\mathbf{p}})\right)\right\} \\ &= q_i h_{\phi^D}(1_i, \overline{\mathbf{p}}) + p_i h_{\phi^D}(0_i, \overline{\mathbf{p}}) \end{aligned}$$

Lemma 2.3.6:

The minimal path vectors (sets) of a system with structure function ϕ are the minimal cut vectors (sets) of the dual system with structure function ϕ^D. Also, the

minimal cut vectors (sets) of a system with structure function ϕ are the minimal path vectors (sets) of the dual system with structure function ϕ^D i.e. .

Proof:

Let the state vector **x** be a minimal path vector of ϕ. By Definition 2.1.9 we have $\phi(\mathbf{z}) = 0$ for $\mathbf{z} < \mathbf{x}$ and so by Definition 2.3.1 and Lemma 2.3.2 we have $\phi^D(\bar{\mathbf{z}}) = 1$ for $\bar{\mathbf{x}} < \bar{\mathbf{z}}$. Thus, $\bar{\mathbf{x}}$ is a minimal cut vector of ϕ^D.Similarly, let the state vector **y** be a minimal cut vector of ϕ.By Definition 2.1.20 we have $\phi(\mathbf{z}) = 1$ for $\mathbf{y} < \mathbf{z}$ and so by (2.3.1) and (2.3.2) we have $\phi^D(\bar{\mathbf{z}}) = 0$ for $\bar{\mathbf{z}} < \bar{\mathbf{y}}$. Thus, $\bar{\mathbf{y}}$ is a minimal path vector of ϕ^D.

Thus we have ${}^{\phi^D}CS_1^m = \{1,2,4\}$, ${}^{\phi^D}CS_2^m = \{1,2,3\}$, ${}^{\phi^D}PS_1^m = \{3,4\}$, ${}^{\phi^D}PS_2^m = \{1\}$ and ${}^{\phi^D}PS_3^m = \{2\}$ for our audio system.

Lemma 2.3.7:

The dual of a module m_k with structure function $\phi_k(\mathbf{x}_k)$ of a coherent system with structure function ψ is a module of the dual system ψ^D with structure function $\phi_k^D(\mathbf{x}_k)$.

Proof:

By (2.2.2) $\psi(\mathbf{y}) = \phi_k(\mathbf{x}_k)\psi(\mathbf{1}_k, \mathbf{y}) + (1 - \phi_k(\mathbf{x}_k))\psi(\mathbf{0}_k, \mathbf{y})$ and using (2.3.1) we have

$$\begin{aligned}\psi(\mathbf{y}) &= (1 - \phi_k^D(\bar{\mathbf{x}}_k))(1 - \psi^D(\mathbf{0}_k, \bar{\mathbf{y}})) + (1 - (1 - \phi_k^D(\bar{\mathbf{x}}_k)))(1 - \psi^D(\mathbf{1}_k, \bar{\mathbf{y}})) \\ &= 1 - (1 - \phi_k^D(\bar{\mathbf{x}}_k))\psi^D(\mathbf{0}_k, \bar{\mathbf{y}}) - \phi_k^D(\bar{\mathbf{x}}_k)\psi^D(\mathbf{1}_k, \bar{\mathbf{y}})\end{aligned}$$

But (2.3.1) implies that $\psi^D(\bar{\mathbf{y}}) = \phi_k^D(\bar{\mathbf{x}}_k)\psi^D(\mathbf{1}_k, \bar{\mathbf{y}}) + (1 - \phi_k^D(\bar{\mathbf{x}}_k))\psi^D(\mathbf{0}_k, \bar{\mathbf{y}})$ and hence our result follows.

As module m_3 was a parallel system of speakers within our audio playback system, we now have that the series system of components c_3 and c_4 form a module within the dual system.

2.4 Effects of Time Dependence on Availability

Up until this point, we have only considered the state and availability of a component or system at a single instance in time. Moreover, we have assumed that component and system availability has remained constant over time. We now relax this constraint. Initially, we shall do this by considering only non-repairable systems i.e. systems in which failed components cannot subsequently be restored into a functioning state.

For $i \in I$, let the continuous random variable T_i denote the lifetime of component c_i (i.e. T_i indicates the time at which component c_i fails) and define $F_i(t) = \Pr[T_i \leq t]$ and $f_i(t) = \partial F_i(t)/\partial t$ to be the cumulative distribution and probability density function of T_i. Let $\overline{F}_i(t) = 1 - F_i(t)$ denote the survival distribution of T_i. In terms of our applications, $F_i(t)$ and $\overline{F}_i(t)$ will be defined only for $t \geq 0$ since the lifetime, T_i, of component c_i can only be non-negative.

As a consequence, the binary indicator variable for component c_i is dependent on time *t* and becomes:

$$x_i(t) = \begin{cases} 1 & \text{when component } c_i \text{ is functioning at time } t \\ 0 & \text{when component } c_i \text{ is failed at time } t \end{cases}$$

As we have non-repairable components, it follows that component c_i functions at time *t* if and only if the component's lifetime T_i exceeds *t*, hence we have that $\Pr[x_i(t) = 1] = \Pr[T_i > t] = \overline{F}_i(t)$ and $\Pr[x_i(t) = 0] = 1 - \Pr[x_i(t) = 1] = F_i(t)$

represents the availability and unavailability of component c_i at time t respectively.

In particular, we will be interested in the case where the availabilities of every component in the system assume the following characteristic:

Definition 2.4.1: *Component availabilities under proportional hazards*
If $\overline{F}_i(t) = \exp\{-\lambda_i R(t)\} = \{r(t)\}^{\lambda_i}$ for $i \in I$ where $R(t)$ represents the common hazard and $r(t) = \exp\{-R(t)\}$, then we say that the component availabilities fall under the proportional hazard rate case.

Now we know that the hazard function, $h_i(t)$, for a cumulative distribution $F_i(t)$ is defined as $h_i(t) = f_i(t)/\overline{F}_i(t)$. In the proportional hazard rate case, we have that $h_i(t) = \lambda_i R'(t)$ for $i \in I$ where $R'(t) = \partial R(t)/\partial t$. Thus, in actual fact, $R'(t)$ represents the common hazard whilst λ_i represents the constant of proportionality.

We subsequently note that integrating $h_i(t) = f_i(t)/\overline{F}_i(t)$ with respect to t over the interval $[0,t]$ leads to $\overline{F}_i(t) = \exp\left\{-\int_0^t h_i(t)\,dt\right\}$.

Furthermore, from Definition 2.4.1 and that of the survival distribution, $\overline{F}_i(t)$, it follows that $\lambda_i R(0) = 0$ and $\lim_{t\to\infty} \lambda_i R(t) = \infty$.

The $n-$tuple $\mathbf{x}(t) = (x_1(t), x_2(t), \ldots, x_n(t))$ now represents the state vector of the system with $\overline{\mathbf{F}}(t) = (\overline{F}_1(t), \overline{F}_2(t), \ldots, \overline{F}_{n-1}(t), \overline{F}_n(t))$ defining the vector of known values of the availabilities of each component c_i. When all components are functioning or failed at time t, then $\overline{\mathbf{F}}(t)$ becomes $\mathbf{0}(t)$ or $\mathbf{1}(t)$ respectively.

$(1_i, \mathbf{x}(t))$ and $(0_i, \mathbf{x}(t))$ will now indicate those state vectors for which component c_i is either functioning or is failed respectively.

T, $\phi(\mathbf{x}(t))$ and $h_\phi(\overline{\mathbf{F}}(t))$ will represent the lifetime, structure function and availability function of the system respectively.

For module m_k, we will have $y_k(t)$ denoting the binary indicator variable for the state of module m_k with $\mathbf{x}_k(t) = y_k(\mathbf{x}(t))$ and $\phi_k(\mathbf{x}_k(t))$ correspondingly expressing the state vector of the constituent components and the structure function of module m_k. $\overline{\mathbf{F}}_k(t)$ will signify the vector of known availabilities of the components constituting module m_k.

The remaining notation will be adjusted accordingly to the above notation. Also, all the preceding theory for time independent systems will still remain valid.

The introduction of time dependence on system availability establishes a further level of complexity within our discussion of system availability, namely that repairs of components can now be performed.

Component repairs have both a qualitative and quantitative effect on component performance, both of which are captured as a change in a component's lifetime distribution or availability.

These changes depend on when the need of the repair is identified, when the repair actually takes place, the duration of time taken to complete the repair, the type of repair conducted, and the overall success of the implementation of the repair procedure as well as the frequency at which these repairs take place during the lifetime of the system.

In general, when component repair is permissible, we shall need to redefine component and system availability accordingly as:

Definition 2.4.2: *Component Availability under Component Repairs*

i. The availability of component c_i at time t is

$$A_i(t) = \Pr[x_i(t) = 1] = E[x_i(t)]$$

ii. The limiting availability of component c_i is

$$A_i = \lim_{t \to \infty} A_i(t)$$

Consequently, we will also use the notation $\mathbf{A}(t) = (A_1(t), A_2(t), \ldots, A_{n-1}(t), A_n(t))$ to represent the vector of component availabilities. Hence, when component repairs is permissible, the terms $A_i(t)$ and $h_\phi(\mathbf{A}(t))$ will replace $\overline{F}_i(t)$ and $h_\phi(\overline{\mathbf{F}}(t))$ respectively and therefore, in accordance with this new notation, we will adjust the remaining notation as necessary.

We can now consider some of the various types of component replacement policies possible. We shall assume that component c_i is failed and will need to be repaired or even replaced.

Definition 2.4.3: *"As Good as New" Replacement Policy*

We say that a component replacement is "as good as new" if the failed component is replaced by an identical but new component. Thus the replaced component would have lifetime T_i with cumulative distribution $F_i(t)$.

We note that the "as good as new" replacement policy can be referred to as a "total repair" policy.

The "as good as new" replacement policy follows closely to the concepts of alternating renewal processes. A more in-depth discussion on renewal theory is given in section 2.5.

Definition 2.4.4: *"Minimal Repair" Policy*

We say that a component repair is a "minimal repair" if the failed component is repaired to the same state of functionality as the component was just prior to the failure occurring i.e. the component is repaired such that the availability of the component after the repair is the same as the availability the component had just before the failure occurred.

Definition 2.4.5: *"Perfect Repair" Policy*

We say that a component repair is a "perfect repair" if the failed component is repaired to a perfect state of functionality i.e. the component is repaired such that it has availability one and will never fail subsequently.

For our continuing example, we will assume that the component availabilities follow the proportional hazard rate case with $R(t) = t$ i.e. the lifetime of component c_i is exponentially distributed with mean $1/\lambda_i$.

2.5 Key Results within Renewal Theory

Renewal Theory has a broad range of applications that are not related only to the field of reliability theory. Thus, the reader is also referred to most texts that deal extensively with random processes. We have made use of the text by Aven and Jensen [1], the text by Feller [7], one of the more comprehensive texts on renewal theory, and the text by Prabhu [8]. Smith [9] also published a detailed exposition on the main results regarding renewal theory.

All the subsequent results are quoted without proof as, in this dissertation, it is inappropriate to delve into such details since discussing them would, at times, require mathematical concepts beyond those already examined.

For $0 \le t < \infty$, let $\{T_i : i = 1,2,3,\ldots\}$ be a sequence of mutually independent non-negative continuous random variables where T_1 has cumulative distribution

function $F_1(t)$ and T_i have common cumulative distribution function $F(t)$ such that $F_1(0) = \Pr[T_1 = 0] < 1$ and $F(0) = \Pr[T_i = 0] < 1$ for $i = 2,3,4,\ldots$.

For $i = 2,3,\ldots$ and when the integral is convergent, let $\mu = E[T_i] = \int_0^\infty t\, dF(t)$ denote the Lebesgue-Stieltjes integral definition of the mean of T_i, otherwise, as T_i is non-negative, let $\mu = \infty$.

Let $S_n = T_1 + T_2 + \ldots + T_{n-1} + T_n$ for $n = 1,2,3,\ldots$ denote the partial sums of the sequence of $\{T_i : i = 1,2,3,\ldots\}$ By convention, define $S_0 = 0$.

We shall let $F^{(n)}(t) = \Pr[S_n \le t]$ denote the cumulative distribution function of S_n where $n = 0,1,2,\ldots$ and $0 \le t < \infty$. Since $S_0 = 0$, it follows that:

$$F^{(0)}(t) = \begin{cases} 1 & \text{for} \quad t \ge 0 \\ 0 & \text{for} \quad t < 0 \end{cases}$$

Furthermore, we can develop a recursive relationship between successive $F^{(n)}(x)$.

Lemma 2.5.1: *Convolution form of* $F^{(n)}(x)$

i. $F^{(1)}(t) = \int_0^t dF(u) = F_1(t)$

ii. $F^{(n+1)}(t) = \int_0^t F^{(n)}(t-u)\, dF(u) = \int_0^t F(t-u)\, dF^{(n)}(u)$ for $n = 1,2,3,\ldots$

We say that $F^{(n+1)}(t)$ is the convolution, denoted $F^{(n+1)} = F^{(n)} * F = F * F^{(n)}$, of both $F^{(n)}(t)$ and $F(t)$.

With all our notation established, we define the meaning of a renewal process:

Definition 2.5.3: *Renewal Processes, Ordinary Renewal Processes and Modified (Delayed) Renewal Processes*

The sequence of random variables $\{S_n : n = 0,1,2,\ldots\}$, defined as above, constitutes a renewal process. A renewal process is said to be ordinary if $F_1(t) = F(t)$ and is said to be modified (delayed) otherwise.

Let us now explore the meaning of a renewal process in the context of reliability theory.

Here, we will model the lifetime of a single component which is replaced, by an identical but new component, immediately upon failure.

The random variables T_i, $i = 2,3,4,\ldots$, represents the lifetime of the replaced component between the $(i-1)^{th}$ and i^{th} failures of the component, and these lifetimes are identically and independently distributed under $F(t)$, since "as good as new" components were installed at each failure time.

At time $t = 0$, we may not begin observing the component's behaviour precisely at the moment it has just been replaced. Thus T_1 corresponds to the initial residual lifetime of the component distributed under $F_1(t)$. It therefore follows that if a new component is installed at $t = 0$, then an ordinary renewal process occurs.

If we were to assume that, at time $t = 0$, the operating component had age t_0 i.e. it has already been operating for t_0 time units, then we can express $F_1(t)$ as:

$$F_1(t) = \Pr\left[X_1 \le t + t_0 \mid X_1 > t_0\right] = \frac{F(t+t_0) - F(t_0)}{1 - F(t_0)} \quad \text{for } t \ge 0$$

The random variables S_n, $n = 1,2,3,\ldots$, measure the accumulated lifetime of the component until the nth component failure.

Not only do we wish to know the accumulated lifetime until the nth component failure, but we may wish to know how many replacement have occurred within a given time period. This leads to the next definition.

Definition 2.5.4: *Renewal Counting Process*

The sequence of random variables $\{N(t): t \geq 0\}$ where

$$N(t) = \begin{cases} \max\{n: S_n \leq t\} & \text{for} \quad T_1 \leq t \\ 0 & \text{otherwise} \end{cases}$$

defines the renewal counting process of the renewal process $\{S_n: n = 0,1,2,\ldots\}$.

It follows that $N(t)$ represents the random number of renewals that occur over the time interval $(0,t]$ and is thus a discrete random variable in nature. $N(t)+1$ is the first passage time of the sequence $\{S_n\}$ beyond the barrier at *t*.

It can be shown that $\{N(t) \geq n\}$ occurs if and only if $\{S_n \leq t\}$ and hence we have $\Pr[N(t) \geq n] = \Pr[S_n \leq t] = F^{(n)}(t)$.

The following properties have also been established for $N(t)$.

Theorem 2.5.5: *Properties of* $N(t)$ *and the Renewal Function* $M(t)$

i. $N(t)$ is a well defined random variable i.e.

$$\Pr[N(t) < \infty] = 1 \qquad (2.5.4)$$

ii. The probability mass function of $N(t)$ is given by

$$\Pr[N(t) = n] = F^{(n)}(t) - F^{(n+1)}(t) \qquad (2.5.5)$$

iii. $N(t)$ has finite moments of all orders i.e.

$$E\left[\{N(t)\}^k\right] < \infty \text{ for } k = 1,2,3,\ldots \qquad (2.5.5)$$

iv. In particular, $N(t)$ has finite mean defined by

$$M(t) = E[N(t)] = \sum_{n=1}^{\infty} F^{(n)}(t) \qquad (2.5.6)$$

We now state several useful properties concerning the renewal function $M(t)$.

Theorem 2.5.6: *The Integral Renewal Equation*

The renewal function $M(t)$ satisfies the integral equation

$$M(t) = F_1(t) + \int_0^t M(t-u)\,dF(u) \qquad (2.5.8)$$

Moreover, $M(t) = \sum_{n=1}^{\infty} F^{(n)}(t)$ is a unique solution to (2.5.8) and is bounded for all finite *t*.

Theorem 2.5.7: *Elementary Renewal Theorem*

For $\mu < \infty$ we have $M(t)/t \to 1/\mu$ as $t \to \infty$. If $\mu = \infty$ then $M(t)/t \to 0$ as $t \to \infty$.

Lemma 2.5.8:

For $h > 0$, $M(t+h) - M(t)$ is a bounded function for finite t. Additionally,

$$M(t+h) - M(t) \le 1 + M(h)$$

Theorem 2.5.9: *Blackwell's Renewal Theorem*

Let $h > 0$. For $\mu < \infty$ we have that $M(t+h) - M(t) \to h/\mu$ as $t \to \infty$. If $\mu = \infty$ then $M(t+h) - M(t) \to 0$ as $t \to \infty$.

Theorem 2.5.10: *Key Renewal Theorem*

Let $Q(t)$ be a non-negative and non-increasing function of *t*, $t \ge 0$, such that $\int_0^{\infty} Q(t)\,dt < \infty$ then either $\int_0^t Q(t-u)\,dM(u) \to \frac{1}{\mu}\int_0^{\infty} Q(t)\,dt$ as $t \to \infty$ for $\mu < \infty$ or $\int_0^t Q(t-u)\,dM(u) \to 0$ as $t \to \infty$ for $\mu = \infty$.

Theorem 2.5.11: *The Renewal Density Function*

The renewal density function $m(t)$ is can be expressed as:

$$m(t) = dM(t)/dt = \sum_{n=1}^{\infty} f^{(n)}(t) = f_1(t) + \int_0^t m(t-u) f(u)\, du \qquad (2.5.9)$$

where $f^{(n)}(t) = dF^{(n)}(t)/dt$ and $f(u) = dF(u)/du$ denotes the probability density function of S_n and T_i for $n = 1,2,3,\ldots$ and $i = 2,3,4,\ldots$ respectively.

Theorem 2.5.12: *Renewal Density Theorem*

Let $f(x) \to 0$ as $x \to \infty$ and, for some constant $p > 1$, let $|f(x)|^p$ be integrable. If $\mu < \infty$ then $m(t) \to 1/\mu$ as $t \to \infty$. If $\mu = \infty$ then $m(t) \to 0$ as $t \to \infty$.

The following proposition will become useful:

Proposition 2.5.13:

Let $g(t)$ be a real valued function which is bounded on finite intervals and assume that $\lim_{t\to\infty} g(t) = g$, then $\lim_{t\to\infty} \frac{1}{t}\int_0^t g(u)\, dM(u) = \frac{g}{\mu}$.

In the context of reliability theory, the downfall of the currently defined renewal processes is that we have assumed that component repairs occur immediately upon component failure with a negligible repair time. We can now consider defining an alternating renewal process in which the repair times are no longer assumed to be negligible.

For $0 \le t < \infty$, let $\{D_i : i = 1,2,3,\ldots\}$ be a sequence of mutually independent non-negative continuous random variables where the D_i have common cumulative distribution function $G(t)$ such that $G(0) = \Pr[D_i = 0] < 1$.

The random variables D_i, $i = 1,2,3,\ldots$, represent the repair times of the replaced component at the ith failure of the component, and these repair times will be

deemed to be identically and independently distributed under $G(t)$, since the repair process is always the same (we are replacing a failed component with an identically new functioning component) at each failure time.

As in the case of μ, we will define $\nu = E[D_i] = \int_0^\infty t\, dG(t)$ as the Lebesgue-Stieltjes integral definition of the mean of D_i for $i = 1,2,3,\ldots$, otherwise let $\nu = \infty$ as each D_i is a non-negative random variable.

For $n = 1,2,3,\ldots$, let $S_n^F = \sum_{j=1}^{n-1}\left(T_j + D_j\right) + T_n$ and $S_n^R = \sum_{j=1}^{n}\left(T_j + D_j\right)$ denote the partial sums of the sequences of $\{T_i : i = 1,2,3,\ldots\}$ and $\{D_i : i = 1,2,3,\ldots\}$. Again, by convention, define $S_0^F = 0$ and $S_0^R = 0$. Note that $S_n^R = S_n^F + D_n$ and $S_n^F = S_{n-1}^R + T_n$.

Thus the random variable S_n^F represents the time at which the nth failure of the component occurs whereas S_n^R corresponds to the time when the nth repair transpires.

We shall let $\left(H^F\right)^{(n)}(t) = \Pr\left[S_n^F \le t\right]$ and $\left(H^R\right)^{(n)}(t) = \Pr\left[S_n^F \le t\right]$ denote the cumulative distribution functions of S_n^F and S_n^R respectively where $n = 0,1,2,\ldots$ and $0 \le t < \infty$. Clearly, as $S_0^F = 0$ and $S_0^R = 0$,

$$\left(H^F\right)^{(n)}(t) = \left(H^R\right)^{(n)}(t) = \begin{cases} 1 & \text{for} \quad t \ge 0 \\ 0 & \text{for} \quad t < 0 \end{cases}$$

Developing a recursive relationship between each successive $\left(H^F\right)^{(n)}(t)$ and $\left(H^R\right)^{(n)}(t)$, we have that:

Lemma 2.5.14: *Convolution forms of* $\left(H^F\right)^{(n)}(t)$ *and* $\left(H^R\right)^{(n)}(t)$

Let $H_1 = F_1 * G = G * F_1$ and $H = F * G = G * F$ be the cumulative distribution function of the random variables $T_1 + D_1$ and $T_i + D_i$ for $i = 2,3,4,\ldots$ respectively, then:

i. $\left(H^F\right)^{(1)}(t) = F_1(t)$

ii. $\left(H^R\right)^{(1)}(t) = H_1(t)$

iii. For $n = 2,3,4,\ldots$, we have that either $\left(H^F\right)^{(n+1)} = \left(H^F\right)^{(n)} * H = H * \left(H^F\right)^{(n)}$ or $\left(H^F\right)^{(n+1)} = \left(H^R\right)^{(n)} * F = F * \left(H^R\right)^{(n)}$

iv. For $n = 2,3,4,\ldots$, we have that either $\left(H^R\right)^{(n+1)} = \left(H^R\right)^{(n)} * H = H * \left(H^R\right)^{(n)}$ or $\left(H^R\right)^{(n+1)} = \left(H^F\right)^{(n+1)} * G = G * \left(H^F\right)^{(n+1)}$

We can now define an alternating renewal process:

Definition 2.5.15: *Alternating Renewal Processes*

The sequence of random variables $\left\{S_n^F : n = 0,1,2,\ldots\right\}$ and $\left\{S_n^R : n = 0,1,2,\ldots\right\}$, defined as above, constitutes an alternating renewal process.

Two renewal counting processes now become of interest, namely $N^F(t)$, the number of failures, and $N^R(t)$, the number of repairs, of the component during the time interval $(0,t]$. $N^F(t)$ and $N^R(t)$ are generated by the sequences $\left\{S_n^F : n = 0,1,2,\ldots\right\}$ and $\left\{S_n^R : n = 0,1,2,\ldots\right\}$ respectively in the same manner as $N(t)$ is generated by $\left\{S_n : n = 0,1,2,\ldots\right\}$.

As a consequence, we will define the renewal functions $M^F(t) = E\left[N^F(t)\right] = \sum_{n=1}^{\infty}\left(H^F\right)^{(n)}(t)$ and $M^R(t) = E\left[N^R(t)\right] = \sum_{n=1}^{\infty}\left(H^R\right)^{(n)}(t)$, each

satisfying the renewal equations $M^F(t) = F_1(t) + \int_0^t M^F(t-u)dH(u)$ and $M^R(t) = H_1(t) + \int_0^t M^R(t-u)dH(u)$ respectively. We also have that the renewal density functions $m^F(t)$ and $m^R(t)$ are defined analogously to Theorem 2.5.10.

From these renewal equations (in fact, we could equally observe the following from the convolution forms of $\left(H^F\right)^{(n)}(t)$ and $\left(H^R\right)^{(n)}(t)$) the alternating renewal process is governed by the cumulative distribution function $H(t)$. It follows that all the asymptotic results concerning both $M^F(t)$ and $M^R(t)$ depend on the mean of $H(t)$. Thus, by replacing μ with $\mu+\nu$ in Theorems 2.5.7, 2.5.9, 2.5.10 and 2.5.12, we obtain the elementary renewal, Blackwell's renewal, the key renewal and renewal density theorems for alternating renewal processes.

With the underlying theory now developed, we can now explore the variously defined importance measures found in the literature.

3 TIME INDEPENDENT IMPORTANCE MEASURES

3.1 Birnbaum Importance

Z. W. Birnbaum [10] was the first to attempt to quantify the importance of a component within a system.

He initially considered defining component importance with reference to the state in which the system is in and the relevance a component may have to the system. He noted that, for some known state vector **x**, the term $\delta_i(\phi, \mathbf{x})$ could be decomposed into the terms $x_i\delta_i(\phi, \mathbf{x}) + \bar{x}_i\delta_i(\phi, \mathbf{x})$. If a component is deemed to be relevant to the system then $\delta_i(\phi, \mathbf{x}) = 1$ (from Definition 2.1.11) and consequently either $x_i\delta_i(\phi, \mathbf{x}) = 1$ or $\bar{x}_i\delta_i(\phi, \mathbf{x}) = 1$. This fact leads to the following definition:

Definition 3.1.1: *Relevance of Components with reference to System State*

i. Component c_i is said to be relevant for the functioning of a system with structure function ϕ under state vector **x** when $\bar{x}_i\delta_i(\phi, \mathbf{x}) = 1$.

ii. Component c_i is said to be relevant for the failure of a system with structure function ϕ under state vector **x** when $x_i\delta_i(\phi, \mathbf{x}) = 1$.

As a component cannot be in both a functioning and a failed state at the same time, we note that a relevance of a component must relate either to the functioning or failure of a system.

If we now assume that each state vector **x** is equally likely to occur then:

Definition 3.1.2: *Birnbaum's Structural Importance*

i. The structural importance of component c_i for the functioning of a system with structure function ϕ under state vector **x** is $I_\phi^B(i,1) = 2^{-n}\sum_{all\ \mathbf{x}} \bar{x}_i \delta_i(\phi, \mathbf{x})$

ii. The structural importance of component c_i for the failure of a system with structure function ϕ under state vector **x** is $I_\phi^B(i,0) = 2^{-n}\sum_{all\ \mathbf{x}} x_i \delta_i(\phi, \mathbf{x})$

iii. The structural importance of component c_i for a system with structure function ϕ under state vector **x** is:

$$I_\phi^B(i) = I_\phi^B(i,1) + I_\phi^B(i,0) = 2^{-n}\sum_{all\ \mathbf{x}} \delta_i(\phi, \mathbf{x}) \qquad (3.1.1)$$

In all cases the summations are taken over the 2^n possible state vectors **x** of the system.

Therefore, Birnbaum's definition of importance is relative frequency of state vectors in which component c_i is relevant. The higher the frequency is, the more important the component is deemed to be for the system.

By direct evaluation, we see that for our hi-fi system we have that $I_\phi^B(2,0) = I_\phi^B(2,1) = \frac{3}{16}$, $I_\phi^B(2) = \frac{6}{16}$, $I_\phi^B(3,0) = I_\phi^B(3,1) = \frac{1}{16}$ and $I_\phi^B(3) = \frac{2}{16}$.

Due to the equality of structural importance of a single component between the functioning and failed states we have the following theorem:

Theorem 3.1.3:

$$I_\phi^B(i,1) = I_\phi^B(i,0) = \tfrac{1}{2} I_\phi^B(i)$$

Proof:

Suppose that component c_i is relevant for some state vector **x**. We know that component c_i is relevant either for the functioning or failure of the system. If c_i is relevant for the functioning of the system, then c_i is relevant for the failure of the

system for the state vector $(1_i, \mathbf{x})$. Similarly, if c_i is relevant for the failure of the system, then c_i is relevant for the functioning of the system for the state vector $(0_i, \mathbf{x})$. Thus, there is a one to one correspondence between those state vectors that have component c_i relevant for the functioning and the failure of the system. The result then follows as a consequence of (3.1.1).

Definition 3.1.4: *Relevance of Components under the Dual Structure Function*

i. Component c_i is said to be relevant for the functioning of the dual system with structure function ϕ^D under state vector $\bar{\mathbf{x}}$ when $x_i \delta_i(\phi^D, \bar{\mathbf{x}}) = 1$.

ii. Component c_i is said to be relevant for the failure of a system with structure function ϕ^D under state vector $\bar{\mathbf{x}}$ when $\bar{x}_i \delta_i(\phi^D, \bar{\mathbf{x}}) = 1$.

Now, by (2.3.2), we deduce that if component c_i is relevant for the functioning (failure) of a system then it is relevant for the failure (functioning) of the dual of the original system.

This leads to following relationship between Birnbaum's Structural Importance for a system and its dual:

Theorem 3.1.5: *Birnbaum's Structural Importance for Dual Systems*

i. $I^B_{\phi^D}(i,1) = I^B_{\phi}(i,0)$

ii. $I^B_{\phi^D}(i,0) = I^B_{\phi}(i,1)$

iii. $I^B_{\phi^D}(i) = I^B_{\phi}(i)$

Proof:

Using Definition 3.1.2, Definition 3.1.4 and (2.3.2) we obtain that

$$I^B_{\phi^D}(i,1) = 2^{-n} \sum_{all\ \mathbf{x}} x_i \delta_i(\phi^D, \bar{\mathbf{x}}) = 2^{-n} \sum_{all\ \mathbf{x}} x_i \delta_i(\phi, \mathbf{x}) = I^B_{\phi}(i,0).$$

In a similar manner we obtain that $I^{BS}_{\phi^D}(i,0) = I^{BS}_{\phi}(i,1)$ and, finally, we have that

$I^{B}_{\phi^D}(i) = I^{B}_{\phi^D}(i,1) + I^{B}_{\phi^D}(i,0) = I^{B}_{\phi}(i,0) + I^{B}_{\phi}(i,1) = I^{B}_{\phi}(i)$.

From Theorem 3.1.5, we have that $I^{B}_{\phi^D}(2,1) = I^{B}_{\phi^D}(2,0) = \frac{3}{16}$, $I^{B}_{\phi^D}(2) = \frac{6}{16}$,

$I^{B}_{\phi^D}(3,1) = I^{B}_{\phi^D}(3,0) = \frac{1}{16}$ and $I^{B}_{\phi^D}(3) = \frac{2}{16}$.

Birnbaum realised that another importance measure needed to be defined to take the actual availabilities of each component into account when they are known.

Definition 3.1.6: *Birnbaum's Reliability Importance*

i. The reliability importance of component c_i for the functioning of a system with structure function ϕ under vector of component availabilities **p** is

$$I^{B}_{\phi}(i,1,\mathbf{p}) = \Pr\left[\phi(\mathbf{x}) = 1 \,\middle|\, (1_i,\mathbf{p})\right] - \Pr\left[\phi(\mathbf{x}) = 1 \,\middle|\, \mathbf{p}\right]$$

ii. The reliability importance of component c_i for the failure of a system with structure function ϕ under vector of component availabilities **p** is

$$I^{B}_{\phi}(i,0,\mathbf{p}) = \Pr\left[\phi(\mathbf{x}) = 0 \,\middle|\, (0_i,\mathbf{p})\right] - \Pr\left[\phi(\mathbf{x}) = 0 \,\middle|\, \mathbf{p}\right]$$

iii. The reliability importance of component c_i for a system with structure function ϕ under vector of component availabilities **p** is:

$$I^{B}_{\phi}(i,\mathbf{p}) = I^{B}_{\phi}(i,1,\mathbf{p}) + I^{B}_{\phi}(i,0,\mathbf{p}) \qquad (3.1.2)$$

Once again, the higher the value of the reliability importance of a component, the more important to the system the component is thought to be.

Corollary 3.1.7:

$$I^{B}_{\phi}(i,1,\mathbf{p}) = h_{\phi}(1_i,\mathbf{p}) - h_{\phi}(\mathbf{p}) \qquad (3.1.3)$$

$$I^{B}_{\phi}(i,0,\mathbf{p}) = h_{\phi}(\mathbf{p}) - h_{\phi}(0_i,\mathbf{p}) \qquad (3.1.4)$$

Proof:

By the definition of system availability we have that

$\Pr\left[\phi(\mathbf{x}) = 1 \,\middle|\, (1_i, \mathbf{p})\right] = h_\phi(1_i, \mathbf{p})$, $\Pr\left[\phi(\mathbf{x}) = 0 \,\middle|\, (0_i, \mathbf{p})\right] = 1 - h_\phi(0_i, \mathbf{p})$ and

$\Pr\left[\phi(\mathbf{x}) = 1 \,|\, \mathbf{p}\right] = h_\phi(\mathbf{p}) = 1 - \Pr\left[\phi(\mathbf{x}) = 0 \,|\, \mathbf{p}\right]$. By some direct manipulation our required results are obtained.

As $h_\phi(\mathbf{p}) = p_1 p_2 (1 - q_3 q_4)$ for our audio playback system, we also have that

$h_\phi(1_2, \mathbf{p}) = p_1(1 - q_3 q_4)$, $h_\phi(1_3, \mathbf{p}) = p_1 p_2$, $h_\phi(0_2, \mathbf{p}) = 0$ and $h_\phi(0_3, \mathbf{p}) = p_1 p_2 p_4$.

It subsequently follows from (3.1.3), (3.1.4) and (3.1.2) that

$I_\phi^B(2,1,\mathbf{p}) = p_1 q_2 (1 - q_3 q_4)$, $I_\phi^B(2,0,\mathbf{p}) = p_1 p_2 (1 - q_3 q_4)$, $I_\phi^B(2,\mathbf{p}) = p_1(1 - q_3 q_4)$,

$I_\phi^B(3,1,\mathbf{p}) = p_1 p_2 q_3 q_4$, $I_\phi^B(3,0,\mathbf{p}) = p_1 p_2 p_3 q_4$ and $I_\phi^B(3,\mathbf{p}) = p_1 p_2 q_4$.

A more computationally practical definition of reliability importance, since in most situations the availability function of the system is already known or determined, is given in Theorem 3.1.8.

Theorem 3.1.8:

$$I_\phi^B(i,\mathbf{p}) = \partial h_\phi(\mathbf{p}) / \partial p_i = E\left[\delta_i(\phi,\mathbf{x})\right] = h_\phi(1_i,\mathbf{p}) - h_\phi(0_i,\mathbf{p}) \qquad (3.1.5)$$

Proof:

From Corollary 3.1.7 and (3.1.2) we obtain that $I_\phi^B(i,\mathbf{p}) = h_\phi(1_i,\mathbf{p}) - h_\phi(0_i,\mathbf{p})$.

Also, as $E\left[\delta_i(\phi,\mathbf{x})\right] = E\left[\phi(1_i,\mathbf{x}) - \phi(0_i,\mathbf{x})\right] = h_\phi(1_i,\mathbf{p}) - h_\phi(0_i,\mathbf{p})$ and

$\partial h_\phi(\mathbf{p}) / \partial p_i = E\left[\delta_i(\phi,\mathbf{x})\right]$ we acquire (3.1.5)

We note that in the subsequent literature, (3.1.5) is usually taken to be the definition of Birnbaum's reliability importance of component c_i.

Using (3.1.5), we see that $I_{\phi}^{B}(2,\mathbf{p}) = p_1(1-q_3q_4)$ and $I_{\phi}^{B}(3,\mathbf{p}) = p_1p_2q_4$ for our audio playback system.

Theorem 3.1.9:

We have that for component c_i within a system with structure function ϕ under vector of component availabilities **p** is:

$$0 \le I_{\phi}^{B}(i,\mathbf{p}) \le 1 \qquad (3.1.6)$$

Proof:

Since $0 \le h_{\phi}(\mathbf{p}) \le 1$ is non-decreasing and $I_{\phi}^{B}(i,\mathbf{p}) = h_{\phi}(1_i,\mathbf{p}) - h_{\phi}(0_i,\mathbf{p})$ we can clearly see that (3.1.6) holds

It can also be established Birnbaum's importance for component c_i under the dual system.

Theorem 3.1.10: *Birnbaum's Importance under the Dual System*

i. $I_{\phi^D}^{B}(i,1,\overline{\mathbf{p}}) = I_{\phi}^{B}(i,0,\mathbf{p})$ (3.1.7)

ii. $I_{\phi^D}^{B}(i,0,\overline{\mathbf{p}}) = I_{\phi}^{B}(i,1,\mathbf{p})$ (3.1.8)

iii. $I_{\phi^D}^{B}(i,\overline{\mathbf{p}}) = I_{\phi}^{B}(i,\mathbf{p})$ (3.1.9)

Proof:

Using (2.3.3) on (3.1.3), (3.1.4) and (3.1.5) yields the required results.

Birnbaum discerned that, by assuming an equi-probable likelihood of a component being in a failed or functioning state for all components, each possible state vector **x** is equally likely to occur and therefore this fact gave rise to Definition 3.1.11:

Definition 3.1.11: *Equivalence of Birnbaum's Reliability and Structural Importance*

Birnbaum's reliability and structural importance are equivalent in all senses when $p_1 = p_2 = \ldots = p_{n-1} = p_n = \frac{1}{2}$ i.e.

$$I_\phi^B(i) = I_\phi^B(i,\mathbf{p})\Big|_{\mathbf{p}=\frac{1}{2}} \qquad (3.1.10)$$

where $\mathbf{p} = \frac{1}{2} \Leftrightarrow \mathbf{p} = \left(\frac{1}{2}, \frac{1}{2}, \ldots, \frac{1}{2}, \frac{1}{2}\right)$.

Applying (3.1.10) we have $I_\phi^B\left(2, \frac{1}{2}\right) = \frac{1}{2}\left(1 - \frac{1}{2} \times \frac{1}{2}\right) = \frac{3}{8}$ and $I_\phi^B\left(3, \frac{1}{2}\right) = \frac{1}{2} \times \frac{1}{2} \times \frac{1}{2} = \frac{1}{8}$ which is an identical result to Birnbaum's structural importance for these hi-fi components.

Subsequently, (3.1.10) can be extended to include the case where $\mathbf{p} = (p, p, \ldots, p)$ for $0 \le p \le 1$, yielding, for Figure 1.3.1, $I_\phi^B(2,\mathbf{p}) = p(1-q^2)$ and $I_\phi^B(3,\mathbf{p}) = p^2 q$. Figure 3.1.1 gives a graphical comparison of these two importance measures.

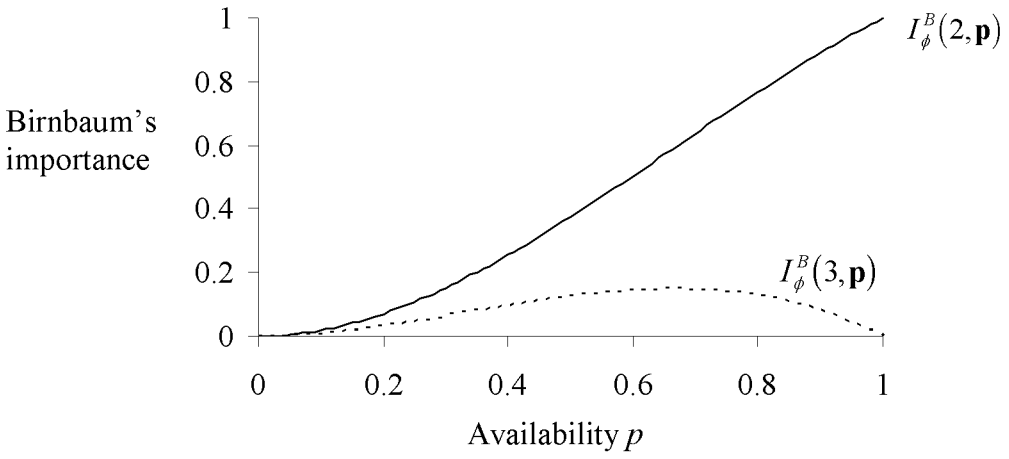

Figure 3.1.1: *Comparison of Birnbaum's reliability importance for components 2 and 3 under equal component probabilities p.*

We can see that, under all conditions of p, component c_2 is more importance than component c_3. This is intuitively obvious since the loss of the amplifier will

immediately cease the ability of the hi-fi system to produce sound, whilst this may not be the case at the loss of a single speaker.

In practice, most components are designed to be as reliable as possible and we are accordingly interested to the case when p is close to one.

One can also define Birnbaum's reliability importance in terms of the unavailabilities of components and the system.

Theorem 3.1.12: *Alternative Definition of Birnbaum's Reliability Importance*

$$I_{\phi}^{B}(i,\mathbf{p}) = \frac{\partial\{1-h_{\phi}(\mathbf{p})\}}{\partial q_i} = I_{\phi^D}^{B}(i,\overline{\mathbf{p}}) = I_{\phi}^{B}(i,\mathbf{p}) \qquad (3.1.11)$$

where $\partial\{1-h_{\phi}(\mathbf{p})\}/\partial q_i$ is called Birnbaum's Failure Importance.

Proof:

Using the pivot decomposition of system availability and (3.1.6) we obtain

$$\partial\{1-h_{\phi}(\mathbf{p})\}/\partial q_i = \partial\{1-p_i h_{\phi}(1_i,\mathbf{p}) - q_i h_{\phi}(0_i,\mathbf{p})\}/\partial q_i = h_{\phi}(1_i,\mathbf{p}) - h_{\phi}(0_i,\mathbf{p}) = I_{\phi}^{B}(i,\mathbf{p})$$

Also we have by definition $q_i = \overline{p}_i$ and, by (2.3.1), $h_{\phi^D}(\overline{\mathbf{p}}) = 1 - h_{\phi}(\mathbf{p})$. The required result then follows.

Birnbaum also extended Definitions 3.1.2 and 3.1.4 for system structures that include modules.

Theorem 3.1.13: *Birnbaum's Reliability Importance for a System with Modules*

The reliability importance of component c_i, situated in module m_k, in a system of n components divided into m modules with structure function ψ is:

$$I_{\phi}^{B}(i,\mathbf{p}) = E\left[\delta_k(\psi,\mathbf{y})\delta_i(\phi_k,\mathbf{x})\right] = \frac{\partial h_{\psi}(\mathbf{p})}{\partial h_{\phi_k}(\mathbf{p}_k)} \frac{\partial h_{\phi_k}(\mathbf{p}_k)}{\partial p_i} = I_{\psi}^{B}(k,\mathbf{p}) I_{\phi_k}^{B}(i,\mathbf{p}_k) \qquad (3.1.12)$$

where $I_{\psi}^{B}(k,\mathbf{p}) = \dfrac{\partial h_{\psi}(\mathbf{p})}{\partial h_{\phi_k}(\mathbf{p}_k)} = h_{\psi}(\mathbf{1}_k,\mathbf{p}) - h_{\psi}(\mathbf{0}_k,\mathbf{p})$ represents the Birnbaum's reliability importance of module m_k within the system and $I_{\phi_k}^{B}(i,\mathbf{p}_k)$ represents Birnbaum's importance for component c_i within module m_k.

Proof:

From Theorem 3.1.5 and the equivalence of ψ and ϕ, we have $I_{\phi}^{B}(i,\mathbf{p}) = \partial h_{\psi}(\mathbf{p})/\partial p_i = E\left[\delta_i(\psi,\mathbf{y}(\mathbf{x}))\right]$. From (2.2.4), we have that $\delta_i(\psi,\mathbf{y}(\mathbf{x})) = \psi(1_i,\mathbf{x}) - \psi(0_i,\mathbf{x})$ i.e. it is the difference of the structure function ψ when component c_i changes from an operating state to a failed state. We have changed the state vectors of ψ from $\mathbf{y}$ to $\mathbf{x}$ because we are now defining the ψ in terms of component and not modules.

Also, by the pivot decomposition of ψ in terms of module m_k we have that

$$\begin{aligned}\psi(1_i,\mathbf{x}) &= y_k\psi(\mathbf{1}_k,1_i,\mathbf{x}) + \bar{y}_k\psi(\mathbf{0}_k,1_i,\mathbf{x}) \\ &= \phi_k(1_i,\mathbf{x})\psi(\mathbf{1}_k,1_i,\mathbf{x}) + \left(1-\phi_k(1_i,\mathbf{x})\right)\psi(\mathbf{0}_k,1_i,\mathbf{x})\end{aligned}$$

since we know that c_i is functioning, $y_k = \phi_k(\mathbf{x}_k)$, $\mathbf{x}_k$ is a subset of $\mathbf{x}$ and all components are independent of each other.

Now $\psi(1_k,\mathbf{x}) = \phi_k(1_i,\mathbf{x})\{\psi(\mathbf{1}_k,\mathbf{y}) - \psi(\mathbf{0}_k,\mathbf{y})\} + \psi(\mathbf{0}_k,\mathbf{y})$ given that ,once the state of module m_k is known, the state of component c_i is inconsequential to the functioning of the system. Repeating the above process with $\psi(0_i,\mathbf{x})$, we get that $\delta_i(\psi,\mathbf{y}(\mathbf{x})) = \delta_k(\psi,\mathbf{y})\delta_i(\phi_k,\mathbf{x})$, where $\delta_k(\psi,\mathbf{y})$ and $\delta_i(\phi_k,\mathbf{x})$ are independent of each other. By (3.1.5) we have

$$\begin{aligned}I_{\phi}^{B}(i,\mathbf{p}) &= E\left[\delta_k(\psi,\mathbf{y})\delta_i(\phi_k,\mathbf{x})\right] = E\left[\delta_k(\psi,\mathbf{y})\right]E\left[\delta_i(\phi_k,\mathbf{x})\right] \\ &= \frac{\partial h_{\psi}(\mathbf{p})}{\partial h_{\phi_k}(\mathbf{p}_k)}\frac{\partial h_{\phi_k}(\mathbf{p}_k)}{\partial p_i} = I_{\psi}^{B}(k,\mathbf{p})I_{\phi_k}^{B}(i,\mathbf{p}_k)\end{aligned}$$

An alternative proof of Theorem 3.1.13 exists and relies on the pivot decomposition of the system availability function. By (2.1.6),

$$\begin{aligned} h_\psi(\mathbf{p}) &= h_{\phi_k}(\mathbf{p})h_\psi(1_k,\mathbf{p}) + \left(1 - h_{\phi_k}(\mathbf{p})\right)h_\psi(0_k,\mathbf{p}) \\ &= h_{\phi_k}(\mathbf{p})\left\{h_\psi(1_k,\mathbf{p}) - h_\psi(0_k,\mathbf{p})\right\} + h_\psi(0_k,\mathbf{p}) \\ &= h_{\phi_k}(\mathbf{p})I_\psi^B(k,\mathbf{p}) + h_\psi(0_k,\mathbf{p}) \end{aligned} \tag{3.1.13}$$

As component c_i is contained in module m_k, $I_\psi^B(k,\mathbf{p})$ and $h_\psi(0_k,\mathbf{p})$ do not depend on p_i. Hence, differentiating $h_\psi(\mathbf{p})$ yields (3.1.12).

We also have the following corollary.

Corollary 3.1.14: *Birnbaum's Structural Importance for a System with Modules*

$$I_\phi^B(i) = I_\psi^B(k)I_{\phi_k}^B(i) \tag{3.1.14}$$

Proof:

The result follows from applying (3.1.10) to (3.1.12)

So, for our audio playback system with a speaker subsystem as in Figure 2.2.1, we have that, as $h_\psi(\mathbf{p}) = \mathbf{p}_1\mathbf{p}_2\mathbf{p}_3 = p_1p_2\mathbf{p_3}$ and $h_{\phi_3}(\mathbf{p}_3) = 1 - q_3q_4$, the importance of the speaker subsystem is $I_\psi^B(3,\mathbf{p}) = p_1p_2$ and the importance of component 3 within the subsystem is $I_{\phi_3}^B(3,\mathbf{p}) = q_4$. Therefore, the importance of component 3 is $p_1p_2q_4$ as seen before. Similar results occur for Birnbaum's structural importance.

3.2 Vesely – Fussell Importance

Birnbaum saw the importance of a component in terms of how much an infinitesimal change in the availability of a component led to a change in the overall availability of the entire system. Vesely [11] and Fussell [12], however, sought to define component importance with respect to the way a single component's failure relates to the failure of the system.

Definition 3.2.1: *Vesely-Fussell's Reliability Importance*

Let ${}^{\phi}v(i)$ denote the number of minimal cut sets containing the failed component c_i and let ${}^{\phi}A_j$ be the event that all components in minimal cut set ${}^{\phi}CS_j^m(i)$ are failed, then the Vesely – Fussell reliability importance of component c_i for a system with structure function ϕ under vector of component availabilities **p** is defined as:

$$I_{\phi}^{V-F}(i,\mathbf{p}) = \Pr\left[\bigcup_{j=1}^{{}^{\phi}v(i)} {}^{\phi}A_j(i)\right] \Big/ \left(1-h_{\phi}(\mathbf{p})\right) \tag{3.2.1}$$

In other words, the Vesely – Fussell reliability importance is the conditional probability that the failure of component c_i, whilst forming part of the failure of at least one minimal cut set containing c_i, contributes to the failure of the system. It is conditioned on the fact that the system is known to be already failed.

For our audio playback system, we have that ${}^{\phi}CS_3^m = \{2\}$ and ${}^{\phi}CS_1^m = \{1,3,4\}$ are the minimal cut sets for component c_2 and c_3 respectively. Consequently, $I_{\phi}^{V-F}(2,\mathbf{p}) = q_2 \big/ \left(1-p_1p_2(1-q_3q_4)\right)$ and $I_{\phi}^{V-F}(3,\mathbf{p}) = q_3q_4 \big/ \left(1-p_1p_2(1-q_3q_4)\right)$.

For systems with numerous minimal cut sets, an approximate method of computing Vesely – Fussell importance would be appreciated.

Theorem 3.2.2:

$$I_{\phi}^{V-F}(i,\mathbf{p}) \le \sum_{j=1}^{{}^{\phi}v(i)} \Pr\left[{}^{\phi}A_j(i)\right] \Big/ \left(1-h_{\phi}(\mathbf{p})\right)$$

Proof:

The result is obtained by applying Boole's inequality to the numerator of (3.2.1).

The inequality in Theorem 3.2.2 can, under suitable conditions, can be replaced by equality and so an approximate method exists to calculate Vesely-Fussell's reliability importance. The required conditions as laid out by Fussell include:

1 All system component failures are independent.
2 All minimal cut sets are known and are determined for a monotone (coherent) system.
3 None of the components are failed at the time of the analysis.

Fussell also remarked that the approximation fared better when the component availabilities as well as the system availability exceeded 0.9.

In a similar way to the definition of Birnbaum's structural importance measure, Vesely and Fussell defined their structural importance measure as follows:

Definition 3.2.3: *Vesely – Fussell's Structural Importance*
The Vesely – Fussell's structural importance of component c_i for a system with structure function ϕ is defined as:

$$I_{\phi}^{V-F}(i) = I_{\phi}^{V-F}(i,\mathbf{p})\Big|_{\mathbf{p}=\frac{1}{2}} \qquad (3.2.2)$$

From (3.2.2), we have that $I_{\phi}^{V-F}(2) = \frac{1}{2}\Big/\left(1-\frac{1}{2}\times\frac{1}{2}\left(1-\frac{1}{2}\times\frac{1}{2}\right)\right) = \frac{8}{13}$ and $I_{\phi}^{V-F}(3) = \frac{1}{2}\times\frac{1}{2}\Big/\left(1-\frac{1}{2}\times\frac{1}{2}\left(1-\frac{1}{2}\times\frac{1}{2}\right)\right) = \frac{4}{13}$.

Similar to Birnbaum's importance, results dealing with systems with modules can be found.

Theorem 3.2.4:
For component c_i in module m_k from a system with structure function ψ under vector of component availabilities $\mathbf{p}$:

$$I_{\phi}^{V-F}(i,\mathbf{p}) = I_{\psi}^{V-F}(k,\mathbf{p})I_{\phi_k}^{V-F}(i,\mathbf{p}_k) \qquad (3.2.3)$$

Proof:

From (3.2.1), we have that $I_{\phi}^{V-F}(i,\mathbf{p}) = \Pr\left[\bigcup_{j=1}^{{}^{\phi}v(i)} {}^{\phi}A_j(i)\right] \Big/ \left(1-h_{\phi}(\mathbf{p})\right)$.

As the number of minimal cut sets under ψ and ϕ are the same, let ${}^{\psi}A_j(k)$ denote the event that all modules contained in minimal cut set ${}^{\psi}CS_j^m(k)$ are failed. Similarly, let ${}^{\phi_k}A_l(i)$ denote the event that all components in minimal cut set ${}^{\phi_k}CS_l^m(i)$ are failed where $l = 1,2,\ldots,{}^{\phi_k}v(i)-1,{}^{\phi_k}v(i)$. For each ${}^{\phi}A_j(i)$ to occur, we require a ${}^{\psi}A_j(k)$ to occur as well as component c_i to fail, given that module m_k is failed i.e.

$$\Pr\left[\bigcup_{j=1}^{{}^{\phi}v(i)} {}^{\phi}A_j(i)\right] = \Pr\left[\bigcup_{j=1}^{{}^{\phi}v(i)} \left\{{}^{\psi}A_j(k) \cap \left(x_i = 0 \mid y_k = 0\right)\right\}\right].$$

As each component (module) is independent of each other and by the definition of ${}^{\phi_k}A_l(i)$ we have:

$$\begin{aligned}
\Pr\left[\bigcup_{j=1}^{{}^{\phi}v(i)} {}^{\phi}A_j(i)\right] &= \Pr\left[\bigcup_{j=1}^{{}^{\phi}v(i)} {}^{\psi}A_j(k)\right] \Pr\left[x_i = 0 \mid y_k = 0\right] \\
&= \Pr\left[\bigcup_{j=1}^{{}^{\phi}v(i)} {}^{\psi}A_j(k)\right] \Pr\left[\{x_i = 0\} \cap \{y_k = 0\}\right] \Big/ \Pr\left[y_k = 0\right] \\
&= \Pr\left[\bigcup_{j=1}^{{}^{\phi}v(i)} {}^{\psi}A_j(k)\right] \Pr\left[\bigcup_{l=1}^{{}^{\phi_k}v(i)} {}^{\phi_k}A_l(i)\right] \Big/ \left(1-h_{\phi_k}(\mathbf{p})\right)
\end{aligned}$$

Hence, by (3.2.1) and the equivalence of ψ and ϕ

$$I_{\phi}^{V-F}(i,\mathbf{p}) = \frac{\Pr\left[\bigcup_{j=1}^{{}^{\phi}v(i)} {}^{\psi}A_j(k)\right]}{1-h_{\psi}(\mathbf{p})} \frac{\Pr\left[\bigcup_{j=1}^{{}^{\phi}v(i)} {}^{\phi_k}A_j(i)\right]}{1-h_{\phi_k}(\mathbf{p})} = I_{\psi}^{V-F}(k,\mathbf{p}) I_{\phi_k}^{V-F}(i,\mathbf{p}_k).$$

Therefore, Vesely – Fussell importance measures for modules follow from the definitions above by treating all modules as if they are components of the system.

Consequently, as we have $h_{\psi}(\mathbf{p}) = p_1 p_2 \mathbf{p}_3$ with $h_{\phi_3}(\mathbf{p}) = \mathbf{p}_3 = 1 - q_3 q_4$ and minimal cut sets ${}^{\psi}CS_3^m = \{3\}$ and ${}^{\phi_3}CS_3^m = \{3,4\}$, it follows from (3.2.1) that $I_{\phi_3}^{V-F}(3,\mathbf{p}) = 1$ and $I_{\psi}^{V-F}(3,\mathbf{p}) = \mathbf{q_3}/(1 - p_1 p_2 \mathbf{p}_3) = q_3 q_4 / (1 - p_1 p_2 (1 - q_3 q_4))$ and so validating (3.2.3).

We can now consider the definition of Vesely – Fussell reliability importance in terms of the dual structure.

Theorem 3.2.5: *Vesely-Fussell's Reliability Importance for the Dual System*

$$I_{\phi^D}^{V-F}(i,\overline{\mathbf{p}}) = \Pr\left[\bigcup_{j=1}^{{}^{\phi}u(i)} {}^{\phi}B_j(i)\right] \Big/ h_{\phi}(\mathbf{p}) \qquad (3.2.4)$$

where ${}^{\phi}B_j(i)$ denotes the event that all components in minimal path set ${}^{\phi}PS_j^m(i)$ under structure function ϕ are functioning.

Proof:

By (3.2.1) we have $I_{\phi^D}^{V-F}(i,\mathbf{p}) = \Pr\left[\bigcup_{j=1}^{{}^{\phi^D}v(i)} {}^{\phi^D}A_j(i)\right] \Big/ \left(1 - h_{\phi^D}(\mathbf{p})\right)$

By applying Lemma 2.3.6, we have that ${}^{\phi^D}A_j(i) = {}^{\phi}B_j(i)$ and ${}^{\phi^D}v(i) = {}^{\phi}u(i)$. By (2.3.3) we have that $1 - h_{\phi^D}(\mathbf{p}) = h_{\phi}(\mathbf{p})$ and our result follows.

Thus, Theorem 3.2.5 leads to the possibility of defining a new importance measure in terms of the functioning components of system. A discussion of this new measure is delayed until Section 3.12 (Meng's criticality importance)

3.3 Criticality Importance

Lambert [13] noted that Birnbaum's reliability importance, given in (3.1.5), did not depend on the state that component c_i is in or if the system is functioning or is failed. Also, Lambert surmised that an importance measure should describe the

failure of the system in terms of the failure of the component causing system failure. This is only possible if the failing component is critical to the functioning of the system at the time of failure.

Definition 3.3.1: *Criticality Importance*

The criticality importance of component c_i in a system with structure function ϕ under vector of component availabilities **p** is defined as:

$$I_{\phi}^{CR}(i,\mathbf{p}) = I_{\phi}^{B}(i,\mathbf{p})\frac{q_i}{1-h_{\phi}(\mathbf{p})} = \frac{\{h_{\phi}(1_i,\mathbf{p}) - h_{\phi}(0_i,\mathbf{p})\}q_i}{1-h_{\phi}(\mathbf{p})} \qquad (3.3.1)$$

as long as $h_{\phi}(\mathbf{p}) \neq 1$.

In other words, the criticality importance measure is the conditional probability that component c_i is critical and has failed given that the system has failed.

The fact that component needs to be critical to the system and that Birnbaum's reliability importance requires a component to be relevant, illustrates that a relationship exists between the two measure and is quantified in (3.3.1)

For our continuing audio playback system, we have that

$$I_{\phi}^{CR}(2,\mathbf{p}) = \frac{p_1 q_2(1-q_3q_4)}{1-p_1p_2(1-q_3q_4)} \text{ and } I_{\phi}^{CR}(3,\mathbf{p}) = \frac{p_1p_2q_3q_4}{1-p_1p_2(1-q_3q_4)}.$$

Lambert also showed that, instead of defining the criticality of component c_i in terms of the system structure function ϕ but with respect to the structure function describing the union of all cut vectors containing c_i, the Criticality importance measure is equivalent to the Vesely-Fussell reliability importance.

Theorem 3.3.2: *Equivalence of Criticality and Vesely-Fussell Reliability Importance*

Let there be w cut vectors $C_l(i)$ and define the indicator variable

$$x_l^* = \begin{cases} 1 & \text{when cut vector } C_l(i) \text{ is functioning} \\ 0 & \text{when cut vector } C_l(i) \text{ is failed} \end{cases}$$

Define the system as a series system of cut vectors with the structure function $\chi(\mathbf{x}^*) = \bigwedge_{l=1}^{w} x_l^*$ with state vector $\mathbf{x}^*$. Let $h_\chi(\mathbf{p})$ be the associated availability function of χ. Under the above-mentioned conditions, the criticality and Vesely – Fussell reliability importance measures are equivalent.

Proof:

As each cut vector $C_l(i)$ forms a subset of a minimal cut vector $C_j^m(i)$, we have that the structure function χ is an indicator variable of $\bigcup_{j=1}^{w} {}^{\chi}A_j(i)$, hence

$$1-h_\chi(\mathbf{p}) = \Pr\left[\bigcup_{j=1}^{w} {}^{\chi}A_j(i)\right] \text{ and so } I_\phi^{V-F}(i,\mathbf{p}) = \frac{1-h_\chi(\mathbf{p})}{1-h_\phi(\mathbf{p})}.$$

We have that the criticality of component c_i with respect to the union of all cut vectors containing c_i is $\{h_\chi(1_i,\mathbf{p}) - h_\chi(0_i,\mathbf{p})\}$.

Additionally, by the pivot decomposition of availability functions $h_\chi(\mathbf{p}) = p_i h_\chi(1_i,\mathbf{p}) + q_i h_\chi(0_i,\mathbf{p}) = p_i h_\chi(1_i,\mathbf{p})$ since $h_\chi(0_i,\mathbf{p}) = 0$. Therefore,

$$I_\phi^{CR}(i,\mathbf{p}) = \frac{\{h_\chi(1_i,\mathbf{p}) - h_\chi(0_i,\mathbf{p})\}q_i}{1-h_\phi(\mathbf{p})} = \frac{1-h_\chi(\mathbf{p})}{1-h_\phi(\mathbf{p})} = I_\phi^{V-F}(i,\mathbf{p}).$$

We observe the following about criticality importance.

Theorem 3.3.3:

If component c_i is in parallel with the rest of a system with structure function ϕ, then $I_\phi^{CR}(i,\mathbf{p}) = 1$.

Proof:

From (2.1.6) we have $h_\phi(\mathbf{p}) = 1 - q_i h_\phi(0_i, \mathbf{p})$ since $h_\phi(1_i, \mathbf{p}) = 1$. From (3.1.5) it follows that $I_\phi^B(i, \mathbf{p}) = h_\phi(0_i, \mathbf{p})$. Substituting into (3.3.1) yields the required result.

In particular, criticality importance does not successfully rank the importance of components within parallel systems.

We can express criticality importance for system with modules as well.

Theorem 3.3.4: *Criticality Importance under Systems with Modules*

For component c_i in module m_k from a system with structure function ψ under vector of component availabilities $\mathbf{p}$:

$$I_\phi^{CR}(i, \mathbf{p}) = I_\psi^{CR}(k, \mathbf{p}) I_{\phi_k}^{CR}(i, \mathbf{p}_k) \qquad (3.3.2)$$

Proof:

From (3.1.12) we have $I_\phi^B(i, \mathbf{p}) = I_\psi^B(k, \mathbf{p}) I_{\phi_k}^B(i, \mathbf{p}_k)$ and hence (3.3.1) becomes

$$I_\phi^{CR}(i, \mathbf{p}) = I_\psi^B(k, \mathbf{p}) I_{\phi_k}^B(i, \mathbf{p}_k) \frac{q_i}{1 - h_\phi(\mathbf{p})} = I_\psi^B(k, \mathbf{p}) \frac{1 - h_{\phi_k}(\mathbf{p})}{1 - h_\psi(\mathbf{p})} I_{\phi_k}^B(i, \mathbf{p}_k) \frac{q_i}{1 - h_{\phi_k}(\mathbf{p})}$$

$$= I_\psi^{CR}(i, \mathbf{p}) I_{\phi_k}^{CR}(i, \mathbf{p}_k)$$

by the equivalence of structure functions ψ and ϕ.

For our audio playback system, recall that $I_\psi^B(3, \mathbf{p}) = p_1 p_2$ and therefore

$I_\psi^{CR}(3, \mathbf{p}) = \dfrac{p_1 p_2 q_3 q_4}{1 - p_1 p_2 (1 - q_3 q_4)}$. $I_{\phi_3}^{CR}(3, \mathbf{p}) = 1$ follows from Theorem 3.3.3.

We can also establish Lambert's criticality importance for the dual system.

Theorem 3.3.5: *Criticality Importance under the Dual System*

$$I_{\phi^D}^{CR}(i,\mathbf{p}) = I_{\phi}^{B}(i,\mathbf{p})\frac{p_i}{h_{\phi}(\mathbf{p})}$$

as long as $h_{\phi}(\mathbf{p}) \neq 0$.

Proof:

By (3.3.1) we have $I_{\phi^D}^{CR}(i,\overline{\mathbf{p}}) = I_{\phi^D}^{B}(i,\overline{\mathbf{p}})\dfrac{\overline{q}_i}{1-h_{\phi^D}(\overline{\mathbf{p}})}$ with $h_{\phi^D}(\mathbf{p}) \neq 1$.

From (2.3.3) and (3.1.9) our result follows.

As in the same way as Vesely – Fussell importance, we can define a new importance measure from Theorem 3.3.5.

Definition 3.3.6: *Lambert's Critical Functionality Importance*

The critical functionality importance of component c_i in a system with structure function ϕ under vector of component availabilities **p** is defined as:

$$I_{\phi}^{CRF}(i,\mathbf{p}) = I_{\phi}^{B}(i,\mathbf{p})\frac{p_i}{h_{\phi}(\mathbf{p})} = \frac{\{h_{\phi}(1_i,\mathbf{p}) - h_{\phi}(0_i,\mathbf{p})\}p_i}{h_{\phi}(\mathbf{p})} \qquad (3.3.2)$$

as long as $h_{\phi}(\mathbf{p}) \neq 0$.

In other words, the critical functionality importance measure is the conditional probability that component c_i is critical and is in a functional state given that the system is functioning.

As critical functionality importance is the dual importance of Lambert's criticality importance i.e. it is the criticality importance of a component under the dual structure function ϕ^D, all previously established properties of criticality importance are also valid. For example, we saw that $I_{\phi}^{CR}(i,\mathbf{p}) = 1$ for component c_i, if component c_i is in parallel with the rest of the system. It follows that

component c_i would then be in series with the rest of the dual system and hence $I_\phi^{CRF}(i,\mathbf{p}) = 1$ for c_i.

For our audio playback system, we recall that $I_\phi^B(2,\mathbf{p}) = p_1(1-q_3q_4)$ and $I_\phi^B(3,\mathbf{p}) = p_1p_2q_4$. Thus, we have $I_\phi^{CRF}(2,\mathbf{p}) = 1$ and $I_\phi^B(3,\mathbf{p}) = p_3q_4/(1-q_3q_4)$.

3.4 Ryabinin – Cherkesov Importance

According to Kovalenko, Kuznetsov and Pegg , Ryabinin and Cherkesov [14] observed, like Lambert, that Birnbaum's measure, as given in (3.1.5), did not depend on the state that component c_i is in. To remedy this they define the measure:

Definition 3.4.1: *Ryabinin – Cherkesov Importance*
The Ryabinin – Cherkesov importance for component c_i in a system with structure function ϕ under vector of component availabilities **p** is

$$I_\phi^{R-Ch}(i,\mathbf{p}) = p_i I_\phi^B(i,\mathbf{p}) = p_i\left\{h_\phi(1_i,\mathbf{p}) - h_\phi(0_i,\mathbf{p})\right\} \qquad (3.4.1)$$

This measure is thus just a rescaled version of the criticality functionality importance measure.

A downfall of the Ryabinin – Cherkesov measure is that, for a highly reliable component, the measure it virtually equal to Birnbaum's measure. This fact leads to the definition of a more "natural" measure.

Definition 3.4.2: *Ryabinin – Cherkesov * Importance*
The Ryabinin – Cherkesov * importance for component c_i in a system with structure function ϕ under vector of component availabilities **p** is

$$I_\phi^{R-Ch*}(i,\mathbf{p}) = q_i I_\phi^B(i,\mathbf{p}) = q_i\left\{h_\phi(1_i,\mathbf{p}) - h_\phi(0_i,\mathbf{p})\right\} \qquad (3.4.2)$$

This measure is just a rescaled version of the Lambert's criticality importance measure.

For our audio playback system we have that $I_{\phi}^{R-Ch}(2,\mathbf{p}) = p_1 p_2 (1 - q_3 q_4)$ which is the same as the system availability function, $I_{\phi}^{R-Ch}(3,\mathbf{p}) = p_1 p_2 p_3 q_4$, $I_{\phi}^{R-Ch*}(2,\mathbf{p}) = p_1 q_2 (1 - q_3 q_4)$ and $I_{\phi}^{R-Ch*}(3,\mathbf{p}) = p_1 p_2 q_3 q_4$

Considering the Ryabinin – Cherkesov measures under the dual system, we find that they are in fact dual measures of each other.

Theorem 3.4.3: *Ryabinin – Cherkesov Importance under the Dual System.*

$$I_{\phi^D}^{R-Ch}(i,\overline{\mathbf{p}}) = I_{\phi}^{R-Ch*}(i,\mathbf{p}) \qquad (3.4.3)$$

Proof:

Applying (3.1.9) and (3.4.2) to (3.4.1) yields the result.

Also, as these measures depend on Birnbaum's reliability importance, we can determine the Ryabinin – Cherkesov importance for modules:

Theorem 3.4.4: *Ryabinin – Cherkesov Importance and Ryabinin-Cherkesov * Importance under Systems with Modules*

i. $$I_{\phi}^{R-Ch}(i,\mathbf{p}) = I_{\psi}^{R-Ch}(i,\mathbf{p}) I_{\phi_k}^{R-Ch}(i,\mathbf{p}) / h_{\phi_k}(\mathbf{p}) \qquad (3.4.4)$$

ii. $$I_{\phi}^{R-Ch*}(i,\mathbf{p}) = I_{\psi}^{R-Ch*}(i,\mathbf{p}) I_{\phi_k}^{R-Ch*}(i,\mathbf{p}) \Big/ \left(1 - h_{\phi_k}(\mathbf{p})\right) \qquad (3.4.5)$$

Proof:

Applying (3.1.12) to (3.4.1), we have that $I_{\phi}^{R-Ch}(i,\mathbf{p}) = I_{\psi}^{B}(i,\mathbf{p}) I_{\phi_k}^{R-Ch}(i,\mathbf{p})$. Multiplying by a factor of $\left(1 - h_{\phi_k}(\mathbf{p})\right) \Big/ \left(1 - h_{\phi_k}(\mathbf{p})\right)$ yields (3.4.4). (3.4.5) follows analogously.

Interestingly, the Ryabinin – Cherkesov importance of a component under the system with modules is the weighted Ryabinin – Cherkesov importance of the component within the module, with the weight being the Birnbaum reliability importance of the module. This is contrary to similar results on modules that we have experience up to this point.

3.5 Risk Reduction/Achievement Worth Importance Measures

Modarres, Kaminskiy and Krivtsov refer to the definition of the following importance measures:

Definition 3.5.1: *Risk Reduction Worth Importance Measure*
The risk reduction worth importance of component c_i within a system with structure function ϕ under vector of component availabilities **p** is defined as:

$$I_{\phi}^{RRW}(i,\mathbf{p}) = h_{\phi}(1_i,\mathbf{p}) - h_{\phi}(\mathbf{p}) \qquad (3.5.1)$$

In other words, the risk reduction worth importance measures the increase in the availability of the system that occurs when the unavailability of component c_i is reduced to zero.

Definition 3.5.2: *Risk Achievement Worth Importance Measure*
The risk achievement worth importance of component c_i within a system with structure function ϕ under vector of component availabilities **p** is defined as:

$$I_{\phi}^{RAW}(i,\mathbf{p}) = h_{\phi}(\mathbf{p}) - h_{\phi}(0_i,\mathbf{p}) \qquad (3.5.2)$$

In other words, the risk achievement worth importance measures the decrease in the availability of the system that occurs when the availability of component c_i is reduced to zero.

It can be shown that Definition 3.5.1 and Definition 3.5.2 are equivalent to Definition 3.4.1 and Definition 3.4.2 respectively.

Theorem 3.5.3: *Equivalence of Ryabinin-Cherkesov and Risk Worth Measures*

i) $I_\phi^{RRW}(i,\mathbf{p}) = I_\phi^{R-Ch*}(i,\mathbf{p})$ ii) $I_\phi^{RAW}(i,\mathbf{p}) = I_\phi^{R-Ch}(i,\mathbf{p})$

Proof:

By (3.5.2) and (2.1.6) we have that

$$\begin{aligned} I_\phi^{RRW}(i,\mathbf{p}) &= h_\phi(1_i,\mathbf{p}) - p_i h_\phi(1_i,\mathbf{p}) - q_i h_\phi(0_i,\mathbf{p}) \\ &= q_i\left\{h_\phi(1_i,\mathbf{p}) - h_\phi(0_i,\mathbf{p})\right\} \\ &= I_\phi^{R-Ch*}(i,\mathbf{p}) \end{aligned}$$

Similarly we have

$$\begin{aligned} I_\phi^{RAW}(i,\mathbf{p}) &= p_i h_\phi(1_i,\mathbf{p}) + q_i h_\phi(0_i,\mathbf{p}) - h_\phi(0_i,\mathbf{p}) \\ &= p_i\left\{h_\phi(1_i,\mathbf{p}) - h_\phi(0_i,\mathbf{p})\right\} \\ &= I_\phi^{R-Ch}(i,\mathbf{p}) \end{aligned}$$

Due to Theorem 3.5.3, we will treat the risk worth measures as just the Ryabinin – Cherkesov measures

3.6 Butler's Cut and Path Importance

Butler [15] found that, in practice, most components have availabilities exceeding $\frac{1}{2}$. This fact questions the practicality of defining structural importance in terms of evaluating the reliability importance of components at $\mathbf{p} = \frac{1}{2}$. Butler, therefore, developed an importance measure, dependant solely on the structure function of a system, which ranks the order of importance of components.

Definition 3.6.1: *Butler's Cut Importance*

Suppose a system with structure function ϕ comprises of n components contains ${}^{\phi}v$ minimal cut sets. Let ${}^{\phi}d_{jr}^{i}$ denote the number of collections of j distinct minimal cut sets such that the union of sets within each collection contains exactly

r components including component c_i, where $j = 1,2,\ldots,{}^{\phi}v-1,{}^{\phi}v$ and $r = 1,2,\ldots,n-1,n$. Define ${}^{\phi}\mathbf{b}^i = \left({}^{\phi}b_1^i,{}^{\phi}b_2^i,\ldots,{}^{\phi}b_{n-1}^i,{}^{\phi}b_n^i\right)$ where ${}^{\phi}b_r^i = \sum_{j=1}^{{}^{\phi}v}(-1)^{j-1}\,{}^{\phi}d_{jr}^i$.

Component c_i is said to be more cut important than component c_k, denoted by $c_i >_{\phi}^{BC} c_k$, if and only if ${}^{\phi}\mathbf{b}^k \prec {}^{\phi}\mathbf{b}^i$ where the operator $\prec$ denotes the lexicographical ordering of vectors. Component c_i is said of equal cut importance to component c_k, denoted by $c_i =_{\phi}^{BC} c_k$, if and only if ${}^{\phi}\mathbf{b}^k = {}^{\phi}\mathbf{b}^i$.

Although the definition of Butler' cut importance may seem daunting, most components can be ranked using only the first few entries of the vector ${}^{\phi}\mathbf{b}$. Furthermore, the first non-zero entry of ${}^{\phi}\mathbf{b}$ is usually unproblematic to compute as illustrated by Proposition 3.6.2 and Corollary 3.6.3. Corollary 3.6.3 also demonstrates how the lexicographical ordering of vectors is defined.

Proposition 3.6.2:

For each component c_i within a system with structure function ϕ, let ${}^{\phi}e_i$ denote the cardinality of the smallest minimal cut set containing c_i and let ${}^{\phi}f_i$ denote the number of minimal cut sets with cardinality ${}^{\phi}e_i$, then

i. ${}^{\phi}e_i = \min\left\{r : {}^{\phi}b_r^i \neq 0\right\}$ ii. ${}^{\phi}f_i = {}^{\phi}b_{{}^{\phi}e_i}^i$

Proof:

By definition, we have that ${}^{\phi}d_{1\,{}^{\phi}e_i}^i = {}^{\phi}f_i$. Moreover, any union of two or more minimal cut sets, one of which containing c_i, must have cardinality of at least ${}^{\phi}e_i + 1$. Thus ${}^{\phi}d_{j\,{}^{\phi}e_i}^i = 0$ for all $j \geq 2$. Hence ${}^{\phi}b_{{}^{\phi}e_i}^i = \sum_{j=1}^{{}^{\phi}v}(-1)^{j-1}\,{}^{\phi}d_{j\,{}^{\phi}e_i}^i = {}^{\phi}f_i$. Finally, as c_i cannot be contained in any minimal cut sets with cardinality smaller than ${}^{\phi}e_i$, we have ${}^{\phi}d_{jr}^i = 0$ and consequently ${}^{\phi}b_r^i = 0$ for $r < {}^{\phi}e_i$.

Corollary 3.6.3:

For components c_i and c_k

i. If ${}^{\phi}e_i < {}^{\phi}e_k$ then $c_i >_{\phi}^{BC} c_k$. ii. If ${}^{\phi}e_i = {}^{\phi}e_k$ and ${}^{\phi}f_i > {}^{\phi}f_k$ then $c_i >_{\phi}^{BC} c_k$.

Proof:

If ${}^{\phi}e_i < {}^{\phi}e_k$ then ${}^{\phi}b_r^i = 0$ for $r < {}^{\phi}e_i$, ${}^{\phi}b_{{}^{\phi}e_i}^i = {}^{\phi}f_i$ and ${}^{\phi}b_r^k = 0$ for $r \le {}^{\phi}e_i$. Thus ${}^{\phi}\mathbf{b}^k \prec {}^{\phi}\mathbf{b}^i$ and so $c_i >_{\phi}^{BC} c_k$. If ${}^{\phi}e_i = {}^{\phi}e_k$ and ${}^{\phi}f_i > {}^{\phi}f_k$ then ${}^{\phi}b_r^i = 0$, ${}^{\phi}b_r^k = 0$, ${}^{\phi}b_{{}^{\phi}e_i}^i = {}^{\phi}f_i > {}^{\phi}f_k = {}^{\phi}b_{{}^{\phi}e_i}^k$ for $r < {}^{\phi}e_i$. Hence ${}^{\phi}\mathbf{b}^k \prec {}^{\phi}\mathbf{b}^i$ and $c_i >_{\phi}^{BC} c_k$.

We already know that our minimal cut sets are ${}^{\phi}CS_1^m = \{3,4\}$, ${}^{\phi}CS_2^m = \{1\}$ and ${}^{\phi}CS_3^m = \{2\}$ for our audio playback system.

Using Definition 3.6.1 we find that ${}^{\phi}d_{1,1}^2 = 1$, ${}^{\phi}d_{2,2}^2 = 1$, ${}^{\phi}d_{2,3}^2 = 1$, ${}^{\phi}d_{3,4}^2 = 1$, ${}^{\phi}d_{1,2}^3 = 1$, ${}^{\phi}d_{2,3}^3 = 2$ and ${}^{\phi}d_{2,4}^3 = 1$. Furthermore, we obtain that ${}^{\phi}\mathbf{b}^2 = (1,-1,-1,1)$ and ${}^{\phi}\mathbf{b}^3 = (0,1,-2,1)$ and, as ${}^{\phi}b_1^2 = 1 > 0 = {}^{\phi}b_1^3$, we have that ${}^{\phi}\mathbf{b}^2 \succ {}^{\phi}\mathbf{b}^3$. Therefore $c_2 >_{\phi}^{BC} c_3$.

Alternatively, using Corollary 3.6.3, we note that ${}^{\phi}e_2 = 1 < 2 = {}^{\phi}e_3$ and hence $c_2 >_{\phi}^{BC} c_3$.

Lemma 3.6.4 and Theorem 3.6.5 shows the relationship between Butler's cut importance and Birnbaum's reliability importance.

Lemma 3.6.4:

$$I_{\phi}^{B}(i,\mathbf{p}) = \sum_{r=1}^{n} {}^{\phi}b_r^i (1-p)^{r-1} \text{ for } \mathbf{p} = (p,p,\ldots,p,p) \qquad (3.6.1)$$

Proof:

From Definition 3.6.1, we recall that we have ${}^{\phi}v$ minimal cut sets in our system and let ${}^{\phi}A_j$ denote the event that all component in the minimal cut set ${}^{\phi}CS_j^m$ fails, then

$$h_{\phi}(\mathbf{p}) = 1 - \Pr\left[\bigcup_{j=1}^{{}^{\phi}v} {}^{\phi}A_j\right].$$

By the inclusion and exclusion principle, $h_{\phi}(\mathbf{p}) = 1 - \sum_{j=1}^{{}^{\phi}v} (-1)^{j-1} {}^{\phi}D_j$ where

$${}^{\phi}D_j = \sum_{1 \le l_1 < l_2 < \ldots < l_{j-1} < l_j \le {}^{\phi}v} \Pr\left[\bigcap_{k=1}^{j} {}^{\phi}A_{l_k}\right].$$

Now the event $\bigcap_{k=1}^{j} {}^{\phi}A_{l_k}$ is the event where all the constituent components of $\bigcup_{k=1}^{j} {}^{\phi}CS_{l_k}^m$ fail and, as every component is independent of each other,

$${}^{\phi}D_j = \sum_{1 \le l_1 < l_2 < \ldots < l_{j-1} < l_j \le {}^{\phi}v} \prod_{t \in \bigcup_{k=1}^{j} {}^{\phi}CS_{l_k}^m} (1 - p_t) \ .$$

Thus $I_{\phi}^{B}(i,\mathbf{p}) = \dfrac{\partial h_{\phi}(\mathbf{p})}{\partial p_i} = \sum_{j=1}^{{}^{\phi}v} (-1)^{j} \dfrac{\partial {}^{\phi}D_j}{\partial p_i} = \sum_{j=1}^{{}^{\phi}v} (-1)^{j-1} \sum_{\substack{1 \le l_1 < l_2 < \ldots < l_{j-1} < l_j \le {}^{\phi}v \\ i \in \bigcup_{k=1}^{j} {}^{\phi}CS_{l_k}^m}} \prod_{\substack{t \in \bigcup_{k=1}^{j} {}^{\phi}CS_{l_k}^m \\ t \ne i}} (1 - p_t)$

Recalling the definition of ${}^{\phi}d_{jr}^{i}$ and $p_1 = p_2 = \ldots = p_{n-1} = p_n = p$

$$I_{\phi}^{B}(i,\mathbf{p}) = \sum_{r=1}^{n} \sum_{j=1}^{{}^{\phi}v} (-1)^{j-1} {}^{\phi}d_{jr}^{i} (1-p)^{r-1} = \sum_{r=1}^{n} {}^{\phi}b_r^{i} (1-p)^{r-1}$$

Theorem 3.6.5:

For $\mathbf{p} = (p, p, \ldots, p, p)$ and $\mathbf{p}$ sufficiently close to unity, the ranking of component importance imposed by Birnbaum's reliability importance and that of Butler's cut importance is identical.

Proof:

Suppose we wish to compare the importance of components c_i and c_k. From Definition 3.6.1 and Lemma 3.6.4, we can see that $c_i =_{\phi}^{BC} c_k$ occurs if and only if ${}^{\phi}b_r^i = {}^{\phi}b_r^k$ occurs for all $r = 1,2,\ldots,n-1,n$ if and only if $I_{\phi}^{B}(i,\mathbf{p}) = I_{\phi}^{B}(k,\mathbf{p})$. Also, $c_i >_{\phi}^{BC} c_k$ occurs if and only if ${}^{\phi}\mathbf{b}^k \prec {}^{\phi}\mathbf{b}^i$ occurs (i.e. ${}^{\phi}e_i < {}^{\phi}e_k$ or, for ${}^{\phi}e_i = {}^{\phi}e_k$, ${}^{\phi}b_{{}^{\phi}e_i}^i > {}^{\phi}b_{{}^{\phi}e_k}^k$), and for p sufficiently large, if and only if $I_{\phi}^{B}(i,\mathbf{p}) > I_{\phi}^{B}(k,\mathbf{p})$.

Because of this close relationship between Birnbaum's reliability and Butler's cut importance, many literary sources refer to a Birnbaum, not Butler, cut importance measure.

Further results generalising Theorem 3.6.5 to the case where component availabilities are not constrained to be equal have been developed but are of limited practical use.

By means of (3.6.1), we have for our audio playback system,

$$\sum_{r=1}^{n} {}^{\phi}b_r^2 (1-p)^{r-1} = 1-(1-p)-(1-p)^2+(1-p)^3$$
$$= 1-q^2-(q-q^3) = p(1-q^2) = I_{\phi}^{B}(2,\mathbf{p})$$

and

$$\sum_{r=1}^{n} {}^{\phi}b_r^2 (1-p)^{r-1} = (1-p)-2(1-p)^2+(1-p)^3$$
$$= q(1-2q+q^2) = p^2 q = I_{\phi}^{B}(3,\mathbf{p})$$

Butler also extended Cut importance to the setting of systems with modules.

Theorem 3.6.6: *Butler's Cut Importance for Systems with Modules*

Suppose we have a system comprising of n components in m modules with structure function ψ and module structure functions ϕ_k. Define vectors ${}^{\psi}\mathbf{b}^k$ and

${}^{\phi_k}\mathbf{b}^i$, analogous to ${}^{\phi}\mathbf{b}^i$ in Definition 3.6.1, corresponding to module m_k under ψ and to component c_i under ϕ_k respectively. Then, for component c_i, we have that

$$ {}^{\phi}b_r^i = \sum_{j=1}^{r} {}^{\psi}b_j^k \, {}^{\phi_k}b_{r-j+1}^i \qquad (3.6.2) $$

Cut importance is then determined as in Definition 3.6.1.

Proof:

Recall from (3.1.12) that $I_{\phi}^B(i,\mathbf{p}) = I_{\psi}^B(k,\mathbf{p}) I_{\phi_k}^B(i,\mathbf{p}_k)$. Letting $\mathbf{p} = (p,p,\ldots,p,p)$ and applying (3.6.1) with the usual convolution of summations formula

$$ \sum_{r=1}^{n} {}^{\phi}b_r^i (1-p)^{r-1} = \left(\sum_{j=1}^{n-n_k+1} {}^{\psi}b_j^k (1-p)^{j-1} \right) \left(\sum_{l=1}^{n_k} {}^{\phi_k}b_l^i (1-p)^{l-1} \right) $$

$$ = \sum_{r=1}^{n} \left(\sum_{j=1}^{r} {}^{\psi}b_j^k \, {}^{\phi_k}b_{r-j+1}^i \right) (1-p)^{r-1} $$

and the required result follows from reapplying (3.6.1).

We need to take note that, in the above proof, each vector ${}^{\psi}\mathbf{b}^k$ and ${}^{\phi_k}\mathbf{b}^i$ is concatenated on the right by a vector of zeroes. The appropriate length of each vector of zeroes is chosen to make the application of the convolution formula for summations valid. Also, all modules except for m_k are dismantled into the original components.

Thus, for our audio playback system, we observe that component c_3 forms part of the speaker subsystem, the only module of the system. To calculate Butler's cut importance ranking, we require the minimal cut sets under structure function ψ (namely ${}^{\psi}CS_1^m = \{1\}$, ${}^{\psi}CS_2^m = \{2\}$ and ${}^{\psi}CS_3^m = \{3\}$) and under ϕ_3 (${}^{\phi_3}CS_1^m = \{3,4\}$). We find that ${}^{\psi}\mathbf{b}^3 = (1,-2,1)$ and ${}^{\phi_3}\mathbf{b}^3 = (0,1)$. Now, as the cardinality of $\bigcup_{j=1}^{3} {}^{\phi}CS_j^m$ is four, we are required to determine ${}^{\phi}b_4^3$ using (3.6.2) and accordingly concatenate one zero onto the right of ${}^{\psi}\mathbf{b}^3$ and two zeroes onto the right of ${}^{\phi_3}\mathbf{b}^3$.

Hence we have that ${}^{\phi}b_1^3 = {}^{\psi}b_1^{3\,\phi_3}b_1^3 = 0$, ${}^{\phi}b_2^3 = {}^{\psi}b_2^{3\,\phi_3}b_1^3 + {}^{\psi}b_1^{3\,\phi_3}b_2^3 = 1$,

${}^{\phi}b_3^3 = {}^{\psi}b_3^{3\,\phi_3}b_1^3 + {}^{\psi}b_2^{3\,\phi_3}b_2^3 + {}^{\psi}b_1^{3\,\phi_3}b_3^3 = -2$ and

${}^{\phi}b_4^3 = {}^{\psi}b_4^{3\,\phi_3}b_1^3 + {}^{\psi}b_3^{3\,\phi_3}b_2^3 + {}^{\psi}b_2^{3\,\phi_3}b_3^3 + {}^{\psi}b_1^{3\,\phi_3}b_4^3 = 1$, giving ${}^{\phi}\mathbf{b}^3 = (0,1,-2,1)$ as before.

Finally, replacing the use of minimal cut vectors and sets with minimal path vectors and sets in Definition 3.6.1, Butler alludes to the definition of an importance ranking related to the minimal path sets of a system.

Definition 3.6.7: *Butler's Path Importance*

Suppose a system with structure function ϕ comprises of n components contains ${}^{\phi}u$ minimal cut sets. Let ${}^{\phi}d_{jr}^i$ denote the number of collections of j distinct minimal cut sets such that the union of sets within each collection contains exactly r components including component c_i, where $j = 1,2,\ldots,{}^{\phi}u-1,{}^{\phi}u$ and $r = 1,2,\ldots,n-1,n$. Define ${}^{\phi}\mathbf{b}^i = \left({}^{\phi}b_1^i, {}^{\phi}b_2^i, \ldots, {}^{\phi}b_{n-1}^i, {}^{\phi}b_n^i\right)$ where ${}^{\phi}b_r^i = \sum_{j=1}^{{}^{\phi}v} (-1)^{j-1}\,{}^{\phi}d_{jr}^i$.

Component c_i is said to be more path important than component c_k, denoted by $c_i >_{\phi}^{BP} c_k$, if and only if ${}^{\phi}\mathbf{b}^k \prec {}^{\phi}\mathbf{b}^i$ where the operator $\prec$ denotes the lexicographical ordering of vectors. Component c_i is said of equal path importance to component c_k, denoted by $c_i =_{\phi}^{BP} c_k$, if and only if ${}^{\phi}\mathbf{b}^k = {}^{\phi}\mathbf{b}^i$.

For our audio playback system, we have ${}^{\phi}PS_1^M = \{1,2,4\}$ and ${}^{\phi}PS_1^M = \{1,2,3\}$. It follows that ${}^{\phi}d_{1,3}^2 = 1$, ${}^{\phi}d_{2,4}^2 = 1$, obtaining ${}^{\phi}\mathbf{b}^2 = (0,0,2,-1)$ whilst ${}^{\phi}d_{1,3}^3 = 1$ and ${}^{\phi}d_{2,4}^3 = 1$ yielding ${}^{\phi}\mathbf{b}^3 = (0,0,1,-1)$. Therefore ${}^{\phi}\mathbf{b}^2 \succ {}^{\phi}\mathbf{b}^3$ and so $c_2 >_{\phi}^{BP} c_3$.

We can now establish a relationship between Butler's cut and path importance by using the dual system.

Theorem 3.6.8: *Butler's Path Importance under the Dual System*

i. $c_i >_{\phi^D}^{BP} c_k$ if and only if $c_i >_{\phi}^{BC} c_k$.

ii. $c_i =_{\phi^D}^{BP} c_k$ if and only if $c_i =_{\phi}^{BC} c_k$.

Proof:

The result follows directly from applying Lemma 2.3.6 to Definition 3.6.1 to obtain Definition 3.6.7.

Thus for our audio playback system, $c_2 >_{\phi}^{BP} c_3$ follows immediately from $c_2 >_{\phi}^{BC} c_3$.

3.7 Vesely-Fussell Cut Importance

Due to Theorem 3.6.5, Arndt and Kirstein [16] believed a similar relationship exists between the Vesely-Fussell importance measure and some unknown lexicographical ordering.

Definition 3.7.1: *Vesely-Fussell Cut Importance*

Suppose a system with structure function ϕ consists of ${}^{\phi}v$ minimal cut sets such that ${}^{\phi}v(i)$ minimal cut sets contain component c_i. Let ${}^{\phi}g_{jr}^{i}$ denote the number of collections of j distinct minimal cut sets containing component c_i such that the union of sets within each collection contains exactly r components, where $j = 1,2,\ldots,{}^{\phi}v(i) - 1, {}^{\phi}v(i)$ and $r = 1,2,\ldots,n-1,n$. Define ${}^{\phi}\mathbf{f}^{i} = \left({}^{\phi}f_1^{i}, {}^{\phi}f_2^{i}, \ldots, {}^{\phi}f_{n-1}^{i}, {}^{\phi}f_n^{i}\right)$ where ${}^{\phi}f_r^{i} = \sum_{j=1}^{{}^{\phi}v} (-1)^{j-1} {}^{\phi}g_{jr}^{i}$. Component c_i is defined to be more Vesely-Fussell cut important than component c_k, denoted by $c_i >_{\phi}^{V-FC} c_k$, if and only if ${}^{\phi}\mathbf{f}^{k} \prec {}^{\phi}\mathbf{f}^{i}$ where the operator $\prec$ denotes the lexicographical ordering of vectors. Component c_i is said of equal cut importance to component c_k, denoted by $c_i =_{\phi}^{V-FC} c_k$, if and only if ${}^{\phi}\mathbf{f}^{k} = {}^{\phi}\mathbf{f}^{i}$.

The lexicographical ordering of vectors ${}^{\phi}\mathbf{f}^{i}$ follows in the same manner as in the case of Butler's cut importance ranking.

Note that ${}^{\phi}g^{i}_{jr}=0$ and ${}^{\phi}f^{i}_{r}=0$ for $r>r_i$ where r_i denotes the cardinality of $\bigcup_{j=1}^{{}^{\phi}v(i)}{}^{\phi}CS^{m}_{j}(i)$.

Moreover, as in the case of Butler's cut importance, an alternative method of determining Vesely-Fussell cut importance exists.

Theorem 3.7.2:

For each component c_i, let ${}^{\phi}a_i$ denote the cardinality of the smallest minimal cut set containing c_i and let ${}^{\phi}t_i$ denote the number of minimal cut sets with cardinality ${}^{\phi}a_i$, then, for components c_i and c_k, $c_i >_{\phi}^{V-FC} c_k$ if either

i. ${}^{\phi}a_i<{}^{\phi}a_k$ ii. ${}^{\phi}a_i={}^{\phi}a_k$ and ${}^{\phi}t_i>{}^{\phi}t_k$

Proof:

By definition, we have that ${}^{\phi}g^{i}_{1^{\phi}a_i}={}^{\phi}t_i$. Furthermore, any union of two or more minimal cut sets, all containing c_i, must have cardinality of at least ${}^{\phi}a_i+1$. Thus ${}^{\phi}g^{i}_{j^{\phi}a_i}=0$ for all $j\geq 2$. Hence ${}^{\phi}f^{i}_{{}^{\phi}a_i}=\sum_{j=1}^{{}^{\phi}v}(-1)^{j-1}{}^{\phi}g^{i}_{j^{\phi}a_i}={}^{\phi}t_i$. Since c_i cannot be contained in any minimal cut sets with cardinality smaller than ${}^{\phi}a_i$, we have ${}^{\phi}g^{i}_{jr}=0$ and consequently ${}^{\phi}f^{i}_{r}=0$ for $r<{}^{\phi}a_i$ i.e. ${}^{\phi}a_i=\min\{r:{}^{\phi}f^{i}_{r}\neq 0\}$ and ${}^{\phi}t_i={}^{\phi}f^{i}_{{}^{\phi}a_i}$. If ${}^{\phi}a_i<{}^{\phi}a_k$ then ${}^{\phi}f^{i}_{r}=0$ for $r<{}^{\phi}a_i$, ${}^{\phi}f^{i}_{{}^{\phi}a_i}={}^{\phi}t_i$ and ${}^{\phi}f^{k}_{r}=0$ for $r\leq{}^{\phi}a_i$. Thus ${}^{\phi}\mathbf{f}^{k}\prec{}^{\phi}\mathbf{f}^{i}$ and so $c_i >_{\phi}^{V-FC} c_k$. If ${}^{\phi}a_i={}^{\phi}a_k$ and ${}^{\phi}t_i>{}^{\phi}t_k$ then ${}^{\phi}f^{i}_{r}=0$, ${}^{\phi}f^{k}_{r}=0$, ${}^{\phi}f^{i}_{{}^{\phi}a_i}={}^{\phi}t_i>{}^{\phi}t_k={}^{\phi}f^{k}_{{}^{\phi}a_i}$ for $r<{}^{\phi}a_i$. Hence ${}^{\phi}\mathbf{f}^{k}\prec{}^{\phi}\mathbf{f}^{i}$ and so $c_i >_{\phi}^{V-FC} c_k$.

For our audio playback system, we have minimal cut sets ${}^{\phi}CS_1^m = \{3,4\}$, ${}^{\phi}CS_2^m = \{1\}$ and ${}^{\phi}CS_3^m = \{2\}$ yielding, from Definition 3.7.1, ${}^{\phi}g_{1,1}^2 = {}^{\phi}g_{1,2}^2 = 1$ with $(1,0,0,0) = {}^{\phi}\mathbf{f}^2 \succ {}^{\phi}\mathbf{f}^3 = (0,1,0,0)$. Thus, $c_2 >_{\phi}^{V-FC} c_3$.

Alternatively, we have that $1 = {}^{\phi}a_2 < {}^{\phi}a_3 = 2$ yielding $c_2 >_{\phi}^{V-FC} c_3$ from Theorem 3.7.2.

The following theorem relates Vesely-Fussell reliability importance to Vesely-Fussell cut importance.

Theorem 3.7.3:

For $\mathbf{p} = (p, p, \ldots, p, p)$, where p is sufficiently close to unity, $I_{\phi}^{V-F}(i,\mathbf{p}) > I_{\phi}^{V-F}(k,\mathbf{p})$ if and only if $c_i >_{\phi}^{V-FC} c_k$.

Proof:

Recall, from Definition 3.2.1, we have that $I_{\phi}^{V-F}(i,\mathbf{p}) = \Pr\left[\bigcup_{j=1}^{{}^{\phi}v(i)} {}^{\phi}A_j\right] \Big/ \left(1 - h_{\phi}(\mathbf{p})\right)$

where ${}^{\phi}A_j$ is the event that all components in minimal cut set ${}^{\phi}CS_j^m(i)$ are failed.

As in Lemma 3.6.4, by the inclusion and exclusion principle,

$$\Pr\left[\bigcup_{j=1}^{{}^{\phi}v(i)} {}^{\phi}A_j\right] = \sum_{j=1}^{{}^{\phi}v(i)} (-1)^{j-1} \sum_{1 \le l_1 < l_2 < \ldots < l_{j-1} < l_j \le {}^{\phi}v(i)} \prod_{t \in \bigcup_{k=1}^{j} {}^{\phi}CS_{l_k}^m(i)} (1 - p_t)$$

As $p_1 = p_2 = \ldots = p_{n-1} = p_n = p$ and, by the definition of ${}^{\phi}g_{jr}^i$ and ${}^{\phi}f_r^i$,

$$\Pr\left[\bigcup_{j=1}^{{}^{\phi}v(i)} {}^{\phi}A_j\right] = \sum_{r=1}^{n} \sum_{j=1}^{{}^{\phi}v} (-1)^{j-1} (1-p)^r \, {}^{\phi}g_{jr}^i = \sum_{r=1}^{n} {}^{\phi}f_r^i (1-p)^r .$$

Hence
$$I_{\phi}^{V-F}(i,\mathbf{p}) = \left(1 - h_{\phi}(\mathbf{p})\right)^{-1} \sum_{r=1}^{n} {}^{\phi}f_r^i (1-p)^r \qquad (3.7.1)$$

The assertion is now proved in a similar manner to Theorem 3.6.5.

(3.7.1) can be easily verified for our audio playback system.

Again, as in the Butler cut importance case, further results generalising Theorem 3.7.3 to unequal component availabilities have been developed but are of limited practical use.

Arndt and Kirstein also extended Vesely-Fussell cut importance to systems with modules.

Theorem 3.7.4: *Vesely-Fussell Cut Importance for Systems with Modules*
Suppose we have a system of n components in m modules having structure function ψ and module structure function ϕ_k for module m_k. Define vectors ${}^{\psi}\mathbf{f}^k$ and ${}^{\phi_k}\mathbf{f}^i$, analogous to ${}^{\phi}\mathbf{f}^i$ in Definition 3.7.1, corresponding to module m_k under ψ and to component c_i under ϕ_k respectively. Then, for component c_i, we have that

$$ {}^{\phi}f_r^i = \sum_{j=1}^{r} {}^{\psi}f_j^k \, {}^{\phi_k}f_{r-j+1}^i \qquad (3.7.2) $$

Vectors ${}^{\psi}\mathbf{f}^k$ and ${}^{\phi_k}\mathbf{f}^i$ are appropriately extended as in Theorem 3.6.6, all modules except for m_k are separated into their constituent components. Vesely-Fussell cut importance is then determined as in Definition 3.7.1.

Proof:
Recall from (3.2.3) we have that $I_{\phi}^{V-F}(i,\mathbf{p}) = I_{\psi}^{V-F}(k,\mathbf{p}) I_{\phi_k}^{V-F}(i,\mathbf{p}_k)$.
By applying (3.7.1) we have

$$ I_{\psi}^{V-F}(k,\mathbf{p}) = \left(1-h_{\psi}(\mathbf{p})\right)^{-1} \sum_{j=1}^{n-n_k+1} {}^{\psi}f_j^k (1-p)^{j-1} \left(1-h_{\phi_k}(\mathbf{p})\right) \quad \text{and} $$

$$ I_{\psi}^{V-F}(k,\mathbf{p}) = \left(1-h_{\phi_k}(\mathbf{p})\right)^{-1} \sum_{r=1}^{n_k} {}^{\phi_k}f_r^i (1-p)^r $$

where $1-h_{\phi_k}(\mathbf{p}_k)$ is the probability that module m_k is failed. Thus

$$I_{\phi}^{V-F}(i,\mathbf{p}) = \left(1-h_{\phi}(\mathbf{p})\right)^{-1}\sum_{r=1}^{n} {}^{\phi}f_r^i\,(1-p)^r$$
$$= \left(1-h_{\psi}(\mathbf{p})\right)^{-1}\sum_{j=1}^{n-n_k+1} {}^{\psi}f_r^i\,(1-p)^{r-1}\sum_{l=1}^{n_k} {}^{\phi_k}f_l^i\,(1-p)^l$$
$$= \left(1-h_{\psi}(\mathbf{p})\right)^{-1}\sum_{r=1}^{n}\left(\sum_{j=1}^{r} {}^{\psi}f_j^k\,{}^{\phi_k}f_{r-j+1}^i\right)(1-p)^r$$

and the result follows.

For our audio playback system, we know that ${}^{\psi}CS_1^m = \{1\}$, ${}^{\psi}CS_2^m = \{2\}$, ${}^{\psi}CS_3^m = \{3\}$ and ${}^{\phi_3}CS_1^m = \{3,4\}$ yielding ${}^{\phi_3}g_{1,2}^3 = {}^{\psi}g_{1,1}^3 = 1$ with ${}^{\phi_3}\mathbf{f}^3 = (0,1)$ and ${}^{\psi}\mathbf{f}^3 = (1,0,0)$. Concatenating one zero onto the right of ${}^{\psi}\mathbf{f}^3$ and two zeroes onto the right of ${}^{\phi_3}\mathbf{f}^3$ and applying (3.7.2), yields ${}^{\phi}\mathbf{f}^3 = (0,1,0,0)$ as before.

As with Butler's cut importance, we can substitute the use of minimal cut sets in Definition 3.7.1 with the use of minimal path sets. This gives rise to Vesely – Fussell path importance and its relationship with Vesely – Fussell cut importance under the dual structure function ϕ^D.

Definition 3.7.5: *Vesely-Fussell Path Importance*

Suppose a system with structure function ϕ consists of ${}^{\phi}u$ minimal cut sets such that ${}^{\phi}u(i)$ minimal cut sets contain component c_i. Let ${}^{\phi}g_{jr}^i$ denote the number of collections of j distinct minimal cut sets containing component c_i such that the union of sets within each collection contains exactly r components, where $j = 1,2,\ldots,{}^{\phi}u(i)-1,{}^{\phi}u(i)$ and $r = 1,2,\ldots,n-1,n$. Define ${}^{\phi}\mathbf{f}^i = \left({}^{\phi}f_1^i,{}^{\phi}f_2^i,\ldots,{}^{\phi}f_{n-1}^i,{}^{\phi}f_n^i\right)$ where ${}^{\phi}f_r^i = \sum_{j=1}^{{}^{\phi}v}(-1)^{j-1}\,{}^{\phi}g_{jr}^i$. Component c_i is defined to be more Vesely-Fussell cut important than component c_k, denoted by $c_i >_{\phi}^{V-F\,P} c_k$, if and only if ${}^{\phi}\mathbf{f}^k \prec {}^{\phi}\mathbf{f}^i$ where the operator $\prec$ denotes the lexicographical ordering of vectors. Component

c_i is said of equal cut importance to component c_k, denoted by $c_i =_{\phi}^{V-FP} c_k$, if and only if ${}^{\phi}\mathbf{f}^k = {}^{\phi}\mathbf{f}^i$.

Theorem 3.7.6: *Vesely – Fussell Path Importance under the Dual System*

iii. $c_i >_{\phi^D}^{V-FP} c_k$ if and only if $c_i >_{\phi}^{BC} c_k$.

iv. $c_i =_{\phi^D}^{V-FP} c_k$ if and only if $c_i =_{\phi}^{BC} c_k$.

Proof:

The result follows directly from applying Lemma 2.3.6 to Definition 3.6.1 to obtain Definition 3.6.7.

3.8 Joint Reliability Importance

Hong and Lie [17] realised that even though system components are statistically independent with respect to each other, their importance to the system may not be so. This is because a change in the availability of a component will lead to a change in the availability of the system as well as a change in the occurrence of some cut sets. This directly influences the calculations of most importance measures and in particular the Birnbaum and Vesely-Fussell reliability importance measures. Hong and Lie captured this change with the following measure.

Definition 3.8.1: *Joint Reliability Importance*

Consider a system of n components with structure function ϕ under vector of component availabilities $\mathbf{p}$, then the joint importance of components c_i and c_k is:

$$I_{\phi}^{JR}(i,k,\mathbf{p}) = \frac{\partial h_{\phi}(\mathbf{p})}{\partial p_i \partial p_k} \qquad (3.8.1)$$

For the audio playback system, we have $h_{\phi}(\mathbf{p}) = p_1 q_2 (1 - q_3 q_4)$ and form (3.8.1) we can tabulate the joint reliability importance between the system's components:

		Component c_k			
		1	2	3	4
Component c_i	1	–	$1-q_3q_4$	p_2q_4	p_2q_3
	2	$1-q_3q_4$	–	p_1q_4	p_1q_3
	3	p_2q_4	p_1q_4	–	$-p_1p_2$
	4	p_2q_3	p_1q_3	$-p_1p_2$	–

Table 3.8.1: *The joint reliability importance,* $I_\phi^{JR}(i,k,\mathbf{p})$, *of components* c_i *and* c_k *for the audio playback system.*

The following theorem establishes more computationally efficient methods of calculating the joint reliability importance of components c_i and c_k, as well as establishing the link between joint reliability and Birnbaum's reliability importance.

Theorem 3.8.2:

i. $$I_\phi^{JR}(i,k,\mathbf{p}) = h_\phi(1_i,1_k,\mathbf{p}) - h_\phi(1_i,0_k,\mathbf{p}) - h_\phi(0_i,1_k,\mathbf{p}) + h_\phi(0_i,0_k,\mathbf{p}) \quad (3.8.2)$$

ii. $$I_\phi^{JR}(i,k,\mathbf{p}) = I_\phi^B\left(i,(1_k,\mathbf{p})\right) - I_\phi^B\left(i,(0_k,\mathbf{p})\right) \quad (3.8.3)$$

iii. $$I_\phi^{JR}(i,k,\mathbf{p}) = \left\{I_\phi^B(i,\mathbf{p}) - I_\phi^B\left(i,(0_k,\mathbf{p})\right)\right\}\Big/ p_k \quad (3.8.4)$$

Proof:

By applying (2.1.6) on $h_\phi(\mathbf{p})$ and then successively conducting a pivot decomposition on $h_\phi(1_i,\mathbf{p})$ and $h_\phi(0_i,\mathbf{p})$ with respect to component c_k we have that $h_\phi(\mathbf{p}) = p_ip_kh_\phi(1_i,1_k,\mathbf{p}) + p_iq_kh_\phi(1_i,0_k,\mathbf{p}) + q_ip_kh_\phi(0_i,1_k,\mathbf{p}) + q_iq_kh_\phi(0_i,0_k,\mathbf{p})$.

Differentiating partially with respect to p_i and p_k yields (3.8.2).

Using the definition of Birnbaum reliability importance we observe that

$$I_\phi^B\left(i,(1_k,\mathbf{p})\right) = h_\phi(1_i,1_k,\mathbf{p}) - h_\phi(0_i,1_k,\mathbf{p}) \text{ and}$$

$$I_\phi^B\left(i,(0_k,\mathbf{p})\right) = h_\phi(1_i,0_k,\mathbf{p}) - h_\phi(0_i,0_k,\mathbf{p}).$$

For this reason we obtain (3.8.3). Finally, as $I_\phi^B(i,\mathbf{p}) = \partial h_\phi(\mathbf{p})/\partial p_i$ and by the pivot decomposition of the system availability function with respect to component c_k we obtain that

$$\begin{aligned} I_\phi^B(i,\mathbf{p}) &= p_k I_\phi^B\left(i,(1_k,\mathbf{p})\right) + q_k I_\phi^B\left(i,(0_k,\mathbf{p})\right) \\ &= p_k\left\{I_\phi^B\left(i,(1_k,\mathbf{p})\right) - I_\phi^B\left(i,(0_k,\mathbf{p})\right)\right\} + I_\phi^B\left(i,(0_k,\mathbf{p})\right) \end{aligned}$$

and by the subsequent use of (3.8.3), yields (3.8.4).

As a consequence of Theorem 3.8.2, we have that all joint reliability measures are bounded.

Corollary 3.8.3:

We have that $\left| I_\phi^{JR}(i,k,\mathbf{p}) \right| \le 1$ for all components c_i and c_k.

Proof:

From (3.1.6) and (3.8.3) the result can be easily deduced.

Furthermore, we can define the joint reliability importance under the dual system.

Theorem 3.8.4: *The Joint Reliability Importance under the Dual System*

$$I_\phi^{JR}(i,k,\mathbf{p}) = -I_{\phi^D}^{JR}(i,k,\overline{\mathbf{p}}) \qquad (3.8.5)$$

Proof:

By (3.8.2) and (2.3.3) we have

$$\begin{aligned} I_\phi^{JR}(i,k,\mathbf{p}) &= h_\phi(1_i,1_k,\mathbf{p}) - h_\phi(1_i,0_k,\mathbf{p}) - h_\phi(0_i,1_k,\mathbf{p}) + h_\phi(0_i,0_k,\mathbf{p}) \\ &= -h_{\phi^D}(0_i,0_k,\mathbf{p}) + h_{\phi^D}(0_i,1_k,\mathbf{p}) + h_{\phi^D}(1_i,0_k,\mathbf{p}) - h_{\phi^D}(1_i,1_k,\mathbf{p}) \\ &= -I_{\phi^D}^{JR}(i,k,\overline{\mathbf{p}}) \end{aligned}$$

As with Birnbaum's reliability importance, Definition 3.8.5 and Corollary 3.8.6 define the joint reliability importance in terms of component and system unavailability.

Definition 3.8.5: *Joint Failure Importance*

Consider a system of n components with structure function ϕ. Then the joint failure importance of components c_i and c_k is:

$$I_{\phi}^{JF}(i,k,\mathbf{p}) = \frac{\partial\left(1-h_{\phi}(\mathbf{p})\right)}{\partial q_i \partial q_k} \tag{3.8.6}$$

Corollary 3.8.6: *Relationship between Joint Reliability and Joint Failure Importance*

$$I_{\phi}^{JF}(i,k,\mathbf{p}) = I_{\phi^D}^{JR}(i,k,\overline{\mathbf{p}}) = -I_{\phi}^{JR}(i,k,\mathbf{p}) \tag{3.8.7}$$

Proof:

By (2.8.3), (3.8.6) can be written as

$$I_{\phi}^{JF}(i,k,\mathbf{p}) = \partial\left\{1-h_{\phi}(\mathbf{p})\right\}/\partial q_i \partial q_k = \partial h_{\phi^D}(\overline{\mathbf{p}})/\partial \overline{p}_i \partial \overline{p}_k = I_{\phi^D}^{JR}(i,k,\overline{\mathbf{p}})$$

Our result then follows by (3.8.5).

As with Definition 3.8.1, there exist computationally more efficient methods of calculating the joint failure importance of components c_i and c_k.

Theorem 3.8.7:

$$I_{\phi}^{JF}(i,k,\mathbf{p}) = \left\{I_{\phi}^{B}(i,\mathbf{p}) - I_{\phi}^{B}\left(i,(1_k,\mathbf{p})\right)\right\}/q_k \tag{3.8.8}$$

Proof:

(3.8.7), (3.8.5) and (3.8.4) yields $I_{\phi}^{JF}(i,k,\mathbf{p}) = \left\{I_{\phi^D}^{B}(i,\overline{\mathbf{p}}) - I_{\phi^D}^{B}\left(i,(0_k,\overline{\mathbf{p}})\right)\right\}/\overline{p}_k$.

The result follows from the fact that $q_k = \overline{p}_k = 1-p_k$ and (3.1.11).

Theorem 3.8.8 below reveals that the sign that the joint reliability importance between two components is determined by the topological structure of the system. The magnitude of the joint reliability importance is then determined by the composition of component availabilities under the vector **p**.

Theorem 3.8.8:

i. If components c_i and c_k are in parallel within a system, then

$$I_\phi^{JR}(i,k,\mathbf{p}) \le 0.$$

ii. If components c_i and c_k are in series within a system, then

$$I_\phi^{JR}(i,k,\mathbf{p}) \ge 0.$$

Proof:

If components c_i and c_k are in parallel within a system then $I_\phi^B\left(i,\left(1_k,\mathbf{p}\right)\right) = 0$.

Thus, by (3.8.3) and (3.1.6), we have that $I_\phi^{JR}(i,k,\mathbf{p}) \le 0$.

If components c_i and c_k are in series then $I_\phi^B\left(i,\left(0_k,\mathbf{p}\right)\right) = 0$ and again, by (3.8.3) and (3.1.6), we obtain that $I_\phi^{JR}(i,k,\mathbf{p}) \ge 0$.

Recalling our audio playback system, we know that components c_3 and c_4 are in parallel with each other and have $I_\phi^{JR}(3,4,\mathbf{p}) = -p_1 p_2$, which is negative as confirmed by Theorem 3.8.8.

Along the lines of Theorem 3.8.8, a more general result can be established. We observe that if two components, c_i and c_k, are in parallel, then any minimal cut set (vector) containing component c_i must contain c_k at the same time. Similarly if the two components are in series, then any minimal path set (vector) comprising of component c_i must also contain c_k. Therefore, there are three scenarios within a system in which components c_i and c_k relate to each other, namely:

1 There exists at least one minimal cut set and no minimal path sets comprising of c_i and c_k simultaneously.
2 There exists at least one minimal path set and no minimal cut sets that contain components c_i and c_k simultaneously.

3 There exists at least one minimal path set and one minimal cut set consisting of c_i and c_k.

A special case of the first scenario is when components c_i and c_k occur in series whilst a special case of the second scenario is when c_i and c_k are in parallel.

The scenario where components c_i and c_k are not contained simultaneously in either a minimal path or minimal cut set is not possible since such components would be irrelevant components.

Theorem 3.8.9:

i. There exists at least one minimal cut set and no minimal path sets comprising of c_i and c_k simultaneously then $I_\phi^{JR}(i,k,\mathbf{p}) \le 0$.

ii. If there exists at least one minimal path set and no minimal cut sets that contain components c_i and c_k simultaneously, then $I_\phi^{JR}(i,k,\mathbf{p}) \ge 0$.

Proof:

For part i., it is sufficient to show that $I_\phi^B(i,\mathbf{p}) - I_\phi^B\left(i,(0_k,\mathbf{p})\right) \le 0$ as, by (3.8.4), we have $I_\phi^{JR}(i,k,\mathbf{p}) \propto I_\phi^B(i,\mathbf{p}) - I_\phi^B\left(i,(0_k,\mathbf{p})\right)$. Suppose that there are ${}^{\phi}u(i \setminus k)$ minimal path sets ${}^{\phi}PS_{l_1}^m(i \setminus k)$ containing component c_i but not component c_k, ${}^{\phi}u(k \setminus i)$ minimal path sets ${}^{\phi}PS_{l_2}^m(k \setminus i)$ containing component c_k but not component c_i and ${}^{\phi}u\left(\overline{\{i,k\}}\right)$ minimal path sets ${}^{\phi}PS_{l_3}^m\left(\overline{\{i.k\}}\right)$ containing neither components c_i nor c_k respectively. Let ${}^{\phi}A_{l_1}$, ${}^{\phi}A_{l_2}$ and ${}^{\phi}A_{l_3}$ denote the event that all the components in the respective minimal path set ${}^{\phi}PS_{l_1}^m(i \setminus k)$, ${}^{\phi}PS_{l_2}^m(k \setminus i)$ and ${}^{\phi}PS_{l_3}^m\left(\overline{\{i.k\}}\right)$ are functioning. As there are no minimal path sets that contain components c_i and c_k simultaneously, we have that:

$$h_\phi(\mathbf{p}) = \Pr\left[\left(\bigcup_{l_1=1}^{{}^{\phi}u(i\setminus k)} {}^{\phi}A_{l_1}\right) \cup \left(\bigcup_{l_2=1}^{{}^{\phi}u(k\setminus i)} {}^{\phi}A_{l_2}\right) \cup \left(\bigcup_{l_3=1}^{{}^{\phi}u\left(\overline{\{i,k\}}\right)} {}^{\phi}A_{l_3}\right)\right]$$

and hence by the inclusion and exclusion principle,

$$h_\phi(\mathbf{p}) = \Pr\left[\bigcup_{l_1=1}^{\phi u(i\backslash k)} \phi A_{l_1}\right] + \Pr\left[\bigcup_{l_2=1}^{\phi u(k\backslash i)} \phi A_{l_2}\right] + \Pr\left[\bigcup_{l_3=1}^{\phi u(\overline{\{i,k\}})} \phi A_{l_3}\right] - \Pr\left[\left(\bigcup_{l_1=1}^{\phi u(i\backslash k)} \phi A_{l_1}\right) \cap \left(\bigcup_{l_2=1}^{\phi u(k\backslash i)} \phi A_{l_2}\right)\right]$$
$$- \Pr\left[\left(\bigcup_{l_1=1}^{\phi u(i\backslash k)} \phi A_{l_1}\right) \cap \left(\bigcup_{l_3=1}^{\phi u(\overline{\{i,k\}})} \phi A_{l_3}\right)\right] - \Pr\left[\left(\bigcup_{l_2=1}^{\phi u(k\backslash i)} \phi A_{l_2}\right) \cap \left(\bigcup_{l_3=1}^{\phi u(\overline{\{i,k\}})} \phi A_{l_3}\right)\right]$$
$$+ \Pr\left[\left(\bigcup_{l_1=1}^{\phi u(i\backslash k)} \phi A_{l_1}\right) \cap \left(\bigcup_{l_2=1}^{\phi u(k\backslash i)} \phi A_{l_2}\right) \cap \left(\bigcup_{l_3=1}^{\phi u(\overline{\{i,k\}})} \phi A_{l_3}\right)\right]$$

Similarly $h_\phi(0_k,\mathbf{p}) = \Pr\left[\bigcup_{l_1=1}^{\phi u(i\backslash k)} \phi A_{l_1}\right] + \Pr\left[\bigcup_{l_3=1}^{\phi u(\overline{\{i,k\}})} \phi A_{l_3}\right] - \Pr\left[\left(\bigcup_{l_1=1}^{\phi u(i\backslash k)} \phi A_{l_1}\right) \cap \left(\bigcup_{l_3=1}^{\phi u(\overline{\{i,k\}})} \phi A_{l_3}\right)\right]$.

Thus we have

$$h_\phi(\mathbf{p}) - h_\phi(0_k,\mathbf{p}) = \Pr\left[\bigcup_{l_2=1}^{\phi u(k\backslash i)} \phi A_{l_2}\right] - \Pr\left[\left(\bigcup_{l_1=1}^{\phi u(i\backslash k)} \phi A_{l_1}\right) \cap \left(\bigcup_{l_2=1}^{\phi u(k\backslash i)} \phi A_{l_2}\right)\right]$$
$$- \Pr\left[\left(\bigcup_{l_2=1}^{\phi u(k\backslash i)} \phi A_{l_2}\right) \cap \left(\bigcup_{l_3=1}^{\phi u(\overline{\{i,k\}})} \phi A_{l_3}\right)\right] + \Pr\left[\left(\bigcup_{l_1=1}^{\phi u(i\backslash k)} \phi A_{l_1}\right) \cap \left(\bigcup_{l_2=1}^{\phi u(k\backslash i)} \phi A_{l_2}\right) \cap \left(\bigcup_{l_3=1}^{\phi u(\overline{\{i,k\}})} \phi A_{l_3}\right)\right]$$

Differentiating $h_\phi(\mathbf{p}) - h_\phi(0_k,\mathbf{p})$ with respect to p_i yields $I_\phi^B(i,\mathbf{p}) - I_\phi^B(i,(0_k,\mathbf{p}))$.

Therefore

$$I_\phi^B(i,\mathbf{p}) - I_\phi^B(i,(0_k,\mathbf{p})) = \partial \Pr\left[\left(\bigcup_{l_1=1}^{\phi u(i\backslash k)} \phi A_{l_1}\right) \cap \left(\bigcup_{l_2=1}^{\phi u(k\backslash i)} \phi A_{l_2}\right) \cap \left(\bigcup_{l_3=1}^{\phi u(\overline{\{i,k\}})} \phi A_{l_3}\right)\right] \Big/ \partial p_i$$
$$- \partial \Pr\left[\left(\bigcup_{l_1=1}^{\phi u(i\backslash k)} \phi A_{l_1}\right) \cap \left(\bigcup_{l_2=1}^{\phi u(k\backslash i)} \phi A_{l_2}\right)\right] \Big/ \partial p_i$$

Now ,using a conditional probability argument

$$\Pr\left[\left(\bigcup_{l_1=1}^{\phi u(i\backslash k)} \phi A_{l_1}\right) \cap \left(\bigcup_{l_2=1}^{\phi u(k\backslash i)} \phi A_{l_2}\right) \cap \left(\bigcup_{l_3=1}^{\phi u(\overline{\{i,k\}})} \phi A_{l_3}\right)\right] = \Pr\left[\left(\bigcup_{l_1=1}^{\phi u(i\backslash k)} \phi A_{l_1}\right) \cap \left(\bigcup_{l_2=1}^{\phi u(k\backslash i)} \phi A_{l_2}\right)\right]$$
$$\times \Pr\left[\left(\bigcup_{l_3=1}^{\phi u(\overline{\{i,k\}})} \phi A_{l_3}\right) \middle| \left(\bigcup_{l_1=1}^{\phi u(i\backslash k)} \phi A_{l_1}\right) \cap \left(\bigcup_{l_2=1}^{\phi u(k\backslash i)} \phi A_{l_2}\right)\right]$$

and since every probability lies in the interval $[0,1]$ we have that

$$\Pr\left[\left(\bigcup_{l_1=1}^{{}^{\phi}u(i\backslash k)} {}^{\phi}A_{l_1}\right)\cap\left(\bigcup_{l_2=1}^{{}^{\phi}u(k\backslash i)} {}^{\phi}A_{l_2}\right)\cap\left(\bigcup_{l_3=1}^{{}^{\phi}u\left(\overline{\{i,k\}}\right)} {}^{\phi}A_{l_3}\right)\right] \le \Pr\left[\left(\bigcup_{l_1=1}^{{}^{\phi}u(i\backslash k)} {}^{\phi}A_{l_1}\right)\cap\left(\bigcup_{l_2=1}^{{}^{\phi}u(k\backslash i)} {}^{\phi}A_{l_2}\right)\right]$$

for all values of p_i.

Thus, as system availability is an increasing function for all values of p_i

$$\partial\Pr\left[\left(\bigcup_{l_1=1}^{{}^{\phi}u(i\backslash k)} {}^{\phi}A_{l_1}\right)\cap\left(\bigcup_{l_2=1}^{{}^{\phi}u(k\backslash i)} {}^{\phi}A_{l_2}\right)\cap\left(\bigcup_{l_3=1}^{{}^{\phi}u\left(\overline{\{i,k\}}\right)} {}^{\phi}A_{l_3}\right)\right]\Big/\partial p_i \le \partial\Pr\left[\left(\bigcup_{l_1=1}^{{}^{\phi}u(i\backslash k)} {}^{\phi}A_{l_1}\right)\cap\left(\bigcup_{l_2=1}^{{}^{\phi}u(k\backslash i)} {}^{\phi}A_{l_2}\right)\right]\Big/\partial p_i$$

Our required result then follows immediately.

For the proof of part ii, it is sufficient to show that $I_{\phi}^{B}(i,\mathbf{p}) - I_{\phi}^{B}\left(i,(1_k,\mathbf{p})\right) \le 0$ coupled with (3.8.8) and (3.8.7). Let there be ${}^{\phi}v(i\backslash k)$ minimal cut sets ${}^{\phi}CS_{l_1}^{m}(i\backslash k)$ containing component c_i but not component c_k, ${}^{\phi}v(k\backslash i)$ minimal cut sets ${}^{\phi}CS_{l_2}^{m}(k\backslash i)$ containing component c_k but not component c_i and ${}^{\phi}v\left(\overline{\{i,k\}}\right)$ minimal path sets ${}^{\phi}CS_{l_3}^{m}\left(\overline{\{i,k\}}\right)$ containing neither components c_i nor c_k respectively. Let ${}^{\phi}B_{l_1}$, ${}^{\phi}B_{l_2}$ and ${}^{\phi}B_{l_3}$ denote the event that all the components in the respective minimal cut set ${}^{\phi}CS_{l_1}^{m}(i\backslash k)$, ${}^{\phi}CS_{l_2}^{m}(k\backslash i)$ and ${}^{\phi}CS_{l_3}^{m}\left(\overline{\{i,k\}}\right)$ are failed. As there are no minimal cut sets containing components c_i and c_k simultaneously, we have that, by the inclusion and exclusion principle:

$$\begin{aligned}
1-h_{\phi}(\mathbf{p}) &= \Pr\left[\left(\bigcup_{l_1=1}^{{}^{\phi}v(i\backslash k)} {}^{\phi}B_{l_1}\right)\cup\left(\bigcup_{l_2=1}^{{}^{\phi}v(k\backslash i)} {}^{\phi}B_{l_2}\right)\cup\left(\bigcup_{l_3=1}^{{}^{\phi}v\left(\overline{\{i,k\}}\right)} {}^{\phi}B_{l_3}\right)\right] \\
&= \Pr\left[\bigcup_{l_1=1}^{{}^{\phi}v(i\backslash k)} {}^{\phi}B_{l_1}\right] + \Pr\left[\bigcup_{l_2=1}^{{}^{\phi}v(k\backslash i)} {}^{\phi}B_{l_2}\right] + \Pr\left[\bigcup_{l_3=1}^{{}^{\phi}v\left(\overline{\{i,k\}}\right)} {}^{\phi}B_{l_3}\right] - \Pr\left[\left(\bigcup_{l_1=1}^{{}^{\phi}v(i\backslash k)} {}^{\phi}B_{l_1}\right)\cap\left(\bigcup_{l_2=1}^{{}^{\phi}v(k\backslash i)} {}^{\phi}B_{l_2}\right)\right] \\
&\quad - \Pr\left[\left(\bigcup_{l_1=1}^{{}^{\phi}v(i\backslash k)} {}^{\phi}B_{l_1}\right)\cap\left(\bigcup_{l_3=1}^{{}^{\phi}v\left(\overline{\{i,k\}}\right)} {}^{\phi}B_{l_3}\right)\right] - \Pr\left[\left(\bigcup_{l_2=1}^{{}^{\phi}v(k\backslash i)} {}^{\phi}B_{l_2}\right)\cap\left(\bigcup_{l_3=1}^{{}^{\phi}v\left(\overline{\{i,k\}}\right)} {}^{\phi}B_{l_3}\right)\right] \\
&\quad + \Pr\left[\left(\bigcup_{l_1=1}^{{}^{\phi}v(i\backslash k)} {}^{\phi}B_{l_1}\right)\cap\left(\bigcup_{l_2=1}^{{}^{\phi}v(k\backslash i)} {}^{\phi}B_{l_2}\right)\cap\left(\bigcup_{l_3=1}^{{}^{\phi}v\left(\overline{\{i,k\}}\right)} {}^{\phi}B_{l_3}\right)\right]
\end{aligned}$$

The remainder of the proof follows analogously to part i. The keys results are:

$$1-h_{\phi}(1_k,\mathbf{p})=\Pr\left[\bigcup_{l_1=1}^{{}^{\phi}v(i\backslash k)}{}^{\phi}B_{l_1}\right]+\Pr\left[\bigcup_{l_3=1}^{{}^{\phi}v(k\backslash i)}{}^{\phi}B_{l_3}\right]-\Pr\left[\left(\bigcup_{l_1=1}^{{}^{\phi}v(i\backslash k)}{}^{\phi}B_{l_1}\right)\cap\left(\bigcup_{l_3=1}^{{}^{\phi}v(k\backslash i)}{}^{\phi}B_{l_3}\right)\right]$$

and

$$I_{\phi}^{B}(i,\mathbf{p})-I_{\phi}^{B}(i,(1_k,\mathbf{p}))=\partial\Pr\left[\left(\bigcup_{l_1=1}^{{}^{\phi}v(i\backslash k)}{}^{\phi}B_{l_1}\right)\cap\left(\bigcup_{l_2=1}^{{}^{\phi}v(k\backslash i)}{}^{\phi}B_{l_2}\right)\cap\left(\bigcup_{l_3=1}^{{}^{\phi}v(\overline{\{i,k\}})}{}^{\phi}B_{l_3}\right)\right]\Big/\partial p_i$$
$$-\partial\Pr\left[\left(\bigcup_{l_1=1}^{{}^{\phi}v(i\backslash k)}{}^{\phi}B_{l_1}\right)\cap\left(\bigcup_{l_2=1}^{{}^{\phi}v(k\backslash i)}{}^{\phi}B_{l_2}\right)\right]\Big/\partial p_i$$

Finally, we can express the joint reliability importance of components for system with modules.

Theorem 3.8.10: *Joint Reliability Importance for a System with Modules*

i. For components c_i and c_k contained in module m_j with structure function ϕ_j within a system with structure function ψ and vector of component probabilities **p**, we have

$$I_{\phi}^{JR}(i,k,\mathbf{p})=I_{\psi}^{B}(j,\mathbf{p})I_{\phi_j}^{JR}(i,k,\mathbf{p}) \qquad (3.8.9)$$

ii. For components c_i contained in module m_j with structure function ϕ_j and c_k contained in module m_l with structure function ϕ_l within a system with structure function ψ and vector of component probabilities **p**, we have

$$I_{\phi}^{JR}(i,k,\mathbf{p})=I_{\psi}^{JR}(j,l,\mathbf{p})I_{\phi_j}^{B}(i,\mathbf{p})I_{\phi_l}^{B}(k,\mathbf{p}) \qquad (3.8.10)$$

Proof:

Let components c_i and c_k be contained in module m_j. By (3.1.13) we have $h_{\psi}(\mathbf{p})=h_{\phi_j}(\mathbf{p})I_{\psi}^{B}(j,\mathbf{p})+h_{\psi}(0_j,\mathbf{p})$. Differentiating with respect to p_i and p_k yields (3.8.9) since $I_{\psi}^{B}(j,\mathbf{p})$ and $h_{\psi}(0_j,\mathbf{p})$ do not depend on both p_i and p_k.

Now let c_i be contained in module m_j and c_k be contained in module m_l.

Applying (2.1.6) to (3.1.13) we have

$$h_\psi(\mathbf{p}) = h_{\phi_j}(\mathbf{p}_j)h_{\phi_l}(\mathbf{p}_l)h_\psi(1_j,1_l,\mathbf{p}) + h_{\phi_j}(\mathbf{p}_j)\left(1-h_{\phi_l}(\mathbf{p}_l)\right)h_\psi(1_j,0_l,\mathbf{p})$$
$$+\left(1-h_{\phi_j}(\mathbf{p}_j)\right)h_{\phi_l}(\mathbf{p}_l)h_\psi(0_j,1_l,\mathbf{p}) + \left(1-h_{\phi_j}(\mathbf{p}_j)\right)\left(1-h_{\phi_l}(\mathbf{p}_l)\right)h_\psi(0_j,0_l,\mathbf{p})$$

Differentiating $h_\psi(\mathbf{p}) = h_\phi(\mathbf{p})$ with respect to p_i and p_k yields

$$I_\phi^{JR}(i,k,\mathbf{p}) = I_{\phi_j}^B(i,\mathbf{p}_j)I_{\phi_l}^B(i,\mathbf{p}_l)\left\{h_\psi(1_j,1_l,\mathbf{p}) - h_\psi(1_j,0_l,\mathbf{p})\right.$$
$$\left. - h_\psi(0_j,1_l,\mathbf{p}) + h_\psi(0_j,0_l,\mathbf{p})\right\}$$

Applying (3.8.2) yields (3.8.10).

For our audio playback system, recall that $I_\psi^B(3,\mathbf{p}) = p_1p_2$ and $h_{\phi_3}(\mathbf{p}) = 1-q_3q_4$.

From (3.8.1) we have $I_{\phi_3}^{JR}(3,4,\mathbf{p}) = -1$. Thus applying (3.8.9) we obtain

$I_{\phi_3}^{JR}(3,4,\mathbf{p}) = -1$ and hence from (3.8.9) we have $I_\phi^{JR}(3,4,\mathbf{p}) = -p_1p_2$.

3.9 Maintenance Prioritisation Measures

Vesely, Belhadj and Rezos [18] propose two possible measures of component importance to use for probability risk assessment under maintenance prioritisation applications. The first measure determines the importance of a maintenance procedure by considering the underlying importance of the component being maintained. The second measure considers the risk of system failure involved by not undertaking the maintenance procedure.

Definition 3.9.1: *Core Damage Frequency (CDF)*

The core damage frequency contribution of the jth minimal cut set ${}^\phi CS_j^m$, denoted by Q_j, is defined as $f_j \prod_{i\in {}^\phi CS_j^m} q_i$ where f_j is the frequency of system failure caused by minimal cut set ${}^\phi CS_j^m$ and the product of component unavailabilities is taken over all components contained in ${}^\phi CS_j^m$. The general minimal cut set formula for

the core damage frequency, denoted by *CDF*, is $CDF = \sum_{j=1}^{{}^{\phi}v} Q_j$ where ${}^{\phi}v$ is the number of minimal cut sets ${}^{\phi}CS_j^m$.

Definition 3.9.2: *Core Damage Frequency Importance of Minimal Cut Sets*
Minimal cut set ${}^{\phi}CS_j^m$ is defined to be more core damage frequency important than minimal cut set ${}^{\phi}CS_l^m$, denoted by ${}^{\phi}CS_j^m >^{CDF} {}^{\phi}CS_l^m$, if and only if $Q_j > Q_l$. ${}^{\phi}CS_j^m$ and ${}^{\phi}CS_l^m$ are said to be equally core damage frequency important if $Q_j = Q_l$.

This core damage frequency importance can be used to prioritise maintenance procedures for systems. Procedures relating to improving the availabilities of components within important minimal cut sets are deem to be essential maintenance procedures.

Theorem 3.9.3:
Suppose that ineffective system maintenance procedures have caused the unavailability of component c_i to increase by a factor g_i, then the change in *CDF*, denoted by ΔCDF, is

$$\Delta CDF = \sum_{i=1}^{n} r_i g_i + \sum_{i_1<i_2} r_{i_1 i_2} g_{i_1} g_{i_2} + \ldots \\ \ldots + \sum_{i_1<i_2<\ldots<i_{k-1}<i_k} r_{i_1 i_2 \ldots i_{k-1} i_k} g_{i_1} g_{i_2} \cdots g_{i_{k-1}} g_{i_k} \qquad (3.9.1)$$

where r_i is the sum of core damage frequency contribution from all minimal cut sets containing component c_i, $r_{i_1 i_2}$ is the sum of core damage frequency contribution from all minimal cut sets containing both components c_{i_1} and c_{i_2}. $r_{i_1 i_2 \ldots i_{k-1} i_k}$ is the sum of core damage frequency contribution from all minimal cut sets containing components c_{i_1} through to c_{i_k} with *k* denoting the size of the largest minimal cut set of the system.

Proof:

We know that $CDF = \sum_{j=1}^{\phi_v} Q_j$ and $Q_j = f_j \prod_{i \in {}^{\phi}CS_j^m} q_i$ where q_i is the unavailability of the component c_i.

We now increase the unavailability of component c_i to $q_i^* = q_i(1+g_i)$ yielding

$$Q_i^* = f_i \prod_{i \in {}^{\phi}CS_j^m} q_i^* = Q_i \prod_{i \in {}^{\phi}CS_j^m} (1+g_i) \text{ and } CDF^* = \sum_{j=1}^{\phi_v} Q_i^* = \sum_{j=1}^{\phi_v} Q_j \prod_{i \in {}^{\phi}CS_j^m} (1+g_i).$$

As $\prod_{i \in {}^{\phi}CS_j^m} (1+g_i) = 1 + \sum_{i \in {}^{\phi}CS_j^m} g_i + \sum_{i_1 < i_2 \in {}^{\phi}CS_j^m} g_{i_1} g_{i_2} + \ldots + \prod_{i \in {}^{\phi}CS_j^m} g_i$ we have that

$$CDF^* = CDF + \sum_{j=1}^{\phi_v} Q_j \sum_{i \in {}^{\phi}CS_j^m} g_i + \ldots + \sum_{j=1}^{\phi_v} Q_j \prod_{i \in {}^{\phi}CS_j^m} g_i .$$

Defining $\Delta CDF = CDF^* - CDF$ and by rewriting the above summations in terms of each component c_i, we obtain (3.9.1).

Having determined the effect that a change in a component's availability can have on the core damage frequency contribution of a component, we can define two importance measures related to this effect.

Definition 3.9.4: *Risk Reduction Importance Measure*

The risk reduction importance of component c_i within a system with structure function ϕ under vector of component availabilities **p** is defined as the decrease in the core damage frequency (*CDF*) of a system that occurs when the unavailability of component c_i is decreased to zero and is denoted by $I_{\phi}^{RR}(i, \mathbf{p})$

Theorem 3.9.5:

$$I_{\phi}^{RR}(i, \mathbf{p}) = r_i \qquad (3.9.5)$$

where r_i is the sum of core damage frequency contribution from all minimal cut sets containing component c_i as before.

Proof:

By Definition 3.9.4 and by defining $g_i = -1$ and $g_j = 0$ for $j \in I$ where $j \neq i$ in (3.9.1) we have $\Delta CDF = -r_i$. Thus the decrease in CDF is r_i and hence our result.

Definition 3.9.6: *Risk Increase Importance Measure*

The risk reduction importance of component c_i within a system with structure function ϕ under vector of component availabilities **p** is defined as the increase in the core damage frequency (*CDF*) of a system that occurs when the unavailability of component c_i is increased to one and is denoted by $I_{\phi}^{RI}(i,\mathbf{p})$

Theorem 3.9.7:

$$I_{\phi}^{RI}(i,\mathbf{p}) = \frac{r_i p_i}{q_i} \qquad (3.9.3)$$

where r_i is the sum of core damage frequency contribution from all minimal cut sets containing component c_i as before.

Proof:

By Definition 3.9.6 and by defining $g_i = p_i/q_i$ and $g_j = 0$ for $j \in I$ where $j \neq i$ in (3.9.1) we have $\Delta CDF = r_i p_i / q_i$.

3.10 Criticality of Nodes

Boland, Proschan and Tong [19] were interested in finding the optimal arrangement of components with varying availabilities within a given system, where optimality is defined as finding the arrangement of components which maximises the availability of the system. Therefore, they desired to define an importance measure to determine the position, or node, where a component should be placed. As each component can be placed in different positions, the definition of this measure needs to be independent of the availability of the actual component being placed in the node and thus we will define a structural measure of importance.

For the purpose of this dissertation, we will allocate a specific component in each node and the measure of importance assigned to the node will be the same as the measure of importance of the allotted component.

Definition 3.10.1: *Criticality of Nodes Importance*

Component c_i is defined to be more critical than component c_k within a system with structure function ϕ, denoted by $c_i >_{\phi}^{cn} c_k$, if $\phi(1_i,0_k,\mathbf{x}) \geq \phi(0_i,1_k,\mathbf{x})$ holds for all state vectors **x** with a strict inequality holding for at least one state vector **x**. We say component c_i is of equal criticality of nodes important to component c_k, denoted by $c_i =_{\phi}^{cn} c_k$, if $\phi(1_i,0_k,\mathbf{x}) = \phi(0_i,1_k,\mathbf{x})$ holds for all state vectors **x**.

Theorem 3.10.2 and 3.10.3 express alternative forms in defining criticality of nodes importance in terms of minimal path and minimal cut sets of the system as it can become tedious to check if $\phi(1_i,0_k,\mathbf{x}) \geq \phi(0_i,1_k,\mathbf{x})$ holds for all state vectors **x** for large systems.

Theorem 3.10.2: *Criticality of Nodes in terms of Minimal Path Sets*

Suppose we define the sets ${}^{\phi}A_{c_i}^m = \left\{ {}^{\phi}PS_j^m(i) : j = 1,2,\ldots,{}^{\phi}u(i)-1,{}^{\phi}u(i) \right\}$ and ${}^{\phi}A_{c_k}^m = \left\{ {}^{\phi}PS_j^m(k) : j = 1,2,\ldots,{}^{\phi}u(k)-1,{}^{\phi}u(k) \right\}$. If ${}^{\phi}A_{c_k}^m$ is a proper subset of ${}^{\phi}A_{c_i}^m$ i.e. ${}^{\phi}A_{c_k}^m \subset {}^{\phi}A_{c_i}^m$, then $c_i >_{\phi}^{cn} c_k$.

Proof:

As ${}^{\phi}A_{c_k}^m \subset {}^{\phi}A_{c_i}^m$ and that there are ${}^{\phi}u$ minimal path sets ${}^{\phi}PS_j^m$ for $j = 1,2,\ldots,{}^{\phi}u-1,{}^{\phi}u$, we can, without loss of generality, list the minimal path sets that belong to ${}^{\phi}A_{c_k}^m$ and ${}^{\phi}A_{c_i}^m$ respectively as ${}^{\phi}A_{c_k}^m = \left\{ {}^{\phi}PS_1^m, {}^{\phi}PS_2^m, \ldots, {}^{\phi}PS_{j_1-1}^m, {}^{\phi}PS_{j_1}^m \right\}$ and ${}^{\phi}A_{c_i}^m = \left\{ {}^{\phi}PS_1^m, {}^{\phi}PS_2^m, \ldots, {}^{\phi}PS_{j_2-1}^m, {}^{\phi}PS_{j_2}^m \right\}$ where $j_1 < j_2$.

In this notation we note that ${}^{\phi}A_{c_i}^m \cap {}^{\phi}\overline{A}_{c_k}^m = \left\{ {}^{\phi}PS_{j_1}^m, {}^{\phi}PS_{j_1+1}^m, \ldots, {}^{\phi}PS_{j_2-1}^m, {}^{\phi}PS_{j_2}^m \right\}$ and ${}^{\phi}\overline{A}_{c_i}^m \cap {}^{\phi}\overline{A}_{c_k}^m = \left\{ {}^{\phi}PS_{j_2}^m, {}^{\phi}PS_{j_2+1}^m, \ldots, {}^{\phi}PS_{u-1}^m, {}^{\phi}PS_u^m \right\}$.

From (2.1.9), we have that ${}^{\phi}\rho_j(1_i,0_k,\mathbf{x}) = {}^{\phi}\rho_j(0_i,1_k,\mathbf{x}) = 0$ for $j \le j_1$, ${}^{\phi}\rho_j(1_i,0_k,\mathbf{x}) \ge {}^{\phi}\rho_j(0_i,1_k,\mathbf{x}) = 0$ for $j_1 < j \le j_2$ and ${}^{\phi}\rho_j(1_i,0_k,\mathbf{x}) = {}^{\phi}\rho_j(0_i,1_k,\mathbf{x})$ for $j_2 < j \le {}^{\phi}u$. By (2.1.11) $\phi(1_i,0_k,\mathbf{x}) = \bigvee_{j=1}^{{}^{\phi}u} {}^{\phi}\rho_j(1_i,0_k,\mathbf{x}) \ge \bigvee_{j=1}^{{}^{\phi}u} {}^{\phi}\rho_j(0_i,1_k,\mathbf{x}) = \phi(0_i,1_k,\mathbf{x})$ holds for all state vectors **x** with a strict inequality holding for at least one state vector **x**, since in such a case we have that ${}^{\phi}\rho_j(1_i,0_k,\mathbf{x}) > {}^{\phi}\rho_j(0_i,1_k,\mathbf{x})$ holds for some $j \in \{j_1+1, j_1+2, \ldots, j_2-1, j_2\}$. Therefore $c_i >_{\phi}^{cn} c_k$

For our audio playback system, we recall that ${}^{\phi}PS_1^m = \{1,2,4\}$ and ${}^{\phi}PS_2^m = \{1,2,3\}$. Subsequently we have $\{{}^{\phi}PS_1^m\} = {}^{\phi}A_{c_3}^m \subset {}^{\phi}A_{c_2}^m = \{{}^{\phi}PS_1^m, {}^{\phi}PS_2^m\}$ and so by Theorem 3.10.2 we have $c_2 >_{\phi}^{cn} c_3$.

Theorem 3.10.3: *Criticality of Nodes in terms of Minimal Cut Sets*
Suppose we define the sets ${}^{\phi}B_{c_i}^m = \{{}^{\phi}CS_j^m(i): j = 1,2,\ldots,{}^{\phi}v(i)-1, {}^{\phi}v(i)\}$ and ${}^{\phi}B_{c_k}^m = \{{}^{\phi}CS_j^m(k): j = 1,2,\ldots,{}^{\phi}v(k)-1, {}^{\phi}v(k)\}$. If ${}^{\phi}B_{c_k}^m$ is a proper subset of ${}^{\phi}B_{c_i}^m$ i.e. ${}^{\phi}B_{c_k}^m \subset {}^{\phi}B_{c_i}^m$, then $c_i >_{\phi}^{cn} c_k$.

Proof:
Again, as ${}^{\phi}B_{c_k}^m \subset {}^{\phi}B_{c_i}^m$ and that there are ${}^{\phi}v$ minimal cut sets ${}^{\phi}CS_j^m$ for $j = 1,2,\ldots,{}^{\phi}v-1, {}^{\phi}v$, we can, without loss of generality, list the minimal cut sets that belong to ${}^{\phi}B_{c_k}^m$ and ${}^{\phi}B_{c_i}^m$ respectively as ${}^{\phi}B_{c_k}^m = \{{}^{\phi}CS_1^m, {}^{\phi}CS_2^m, \ldots, {}^{\phi}CS_{j_1-1}^m, {}^{\phi}CS_{j_1}^m\}$ and ${}^{\phi}B_{c_i}^m = \{{}^{\phi}CS_1^m, {}^{\phi}CS_2^m, \ldots, {}^{\phi}CS_{j_2-1}^m, {}^{\phi}CS_{j_2}^m\}$ where $j_1 < j_2$. From (2.1.10), we have that ${}^{\phi}\kappa_j(1_i,0_k,\mathbf{x}) = {}^{\phi}\kappa_j(0_i,1_k,\mathbf{x}) = 1$ for $j \le j_1$, ${}^{\phi}\kappa_j(0_i,1_k,\mathbf{x}) \le {}^{\phi}\kappa_j(1_i,0_k,\mathbf{x}) = 1$ for $j_1 < j \le j_2$ and ${}^{\phi}\kappa_j(1_i,0_k,\mathbf{x}) = {}^{\phi}\kappa_j(0_i,1_k,\mathbf{x})$ for $j_2 < j \le {}^{\phi}v$. By (2.1.12), $\phi(1_i,0_k,\mathbf{x}) = \bigwedge_{j=1}^{{}^{\phi}v} {}^{\phi}\kappa_j(1_i,0_k,\mathbf{x}) \ge \bigwedge_{j=1}^{{}^{\phi}v} {}^{\phi}\kappa_j(0_i,1_k,\mathbf{x}) = \phi(0_i,1_k,\mathbf{x})$ holds for all state vectors **x** with a strict inequality holding for at least one state vector **x**, since in such a

case we have that ${}^{\phi}\kappa_j(1_i,0_k,\mathbf{x}) > {}^{\phi}\kappa_j(0_i,1_k,\mathbf{x})$ holds for some $j \in \{j_1+1, j_1+2, \ldots, j_2-1, j_2\}$. Therefore $c_i >_{\phi}^{cn} c_k$

Boland et al also established the relationship between their importance ranking and Birnbaum's structural importance.

Theorem 3.10.4:

If $c_i >_{\phi}^{cn} c_k$ then $I_{\phi}^{B}(i) > I_{\phi}^{B}(k)$.

Proof:

It is sufficient to show that $I_{\phi}^{B}(i) - I_{\phi}^{B}(k) > 0$.

By (3.1.1)

$$\begin{aligned} I_{\phi}^{B}(i) - I_{\phi}^{B}(k) &= 2^{-n}\sum_{all\ \mathbf{x}}\{\delta_i(\phi,\mathbf{x}) - \delta_k(\phi,\mathbf{x})\} \\ &= 2^{-n}\sum_{all\ \mathbf{x}}\{\phi(1_i,\mathbf{x}) - \phi(0_i,\mathbf{x}) - \phi(1_k,\mathbf{x}) + \phi(0_k,\mathbf{x})\} \end{aligned}$$

By (2.1.2) and some manipulation, we obtain:

$$\begin{aligned} I_{\phi}^{B}(i) - I_{\phi}^{B}(k) = 2^{-n}\sum_{all\ \mathbf{x}}\{&(x_k - x_i)\phi(1_i,1_k,\mathbf{x}) + (\bar{x}_k + x_i)\phi(1_i,0_k,\mathbf{x}) \\ &-(x_k + \bar{x}_i)\phi(0_i,1_k,\mathbf{x}) + (x_k - x_i)\phi(0_i,0_k,\mathbf{x})\} \end{aligned}$$

By partitioning the summation into the various states in which components c_i and c_k can be in, we evaluate the above expression as:

$$\begin{aligned} I_{\phi}^{B}(i) - I_{\phi}^{B}(k) = 2^{-n}\Bigg[&\sum_{\{\mathbf{x}:x_i=x_k=1\}}\{\phi(1_i,0_k,\mathbf{x}) - \phi(0_i,1_k,\mathbf{x})\} + \sum_{\{\mathbf{x}:x_i=x_k=0\}}\{\phi(1_i,0_k,\mathbf{x}) - \phi(0_i,1_k,\mathbf{x})\} \\ &+ \sum_{\{\mathbf{x}:x_i=\bar{x}_k=1\}}\{-\phi(1_i,1_k,\mathbf{x}) + 2\phi(1_i,0_k,\mathbf{x}) - \phi(0_i,0_k,\mathbf{x})\} \\ &+ \sum_{\{\mathbf{x}:\bar{x}_i=x_k=1\}}\{\phi(1_i,1_k,\mathbf{x}) - 2\phi(0_i,1_k,\mathbf{x}) + \phi(0_i,0_k,\mathbf{x})\}\Bigg] \end{aligned}$$

The state vectors under which each summation is defined is in terms of the states of all components other than components c_i and c_k, and thus the states vectors under each summation is the same. Hence,

$$I_\phi^B(i) - I_\phi^B(k) = 2^{-(n-2)} \sum_{\mathbf{x}^{(i,k)}} \left\{ \phi(1_i, 0_k, \mathbf{x}) - \phi(0_i, 1_k, \mathbf{x}) \right\}$$

where the notation $\mathbf{x}^{(i,k)}$ represents those state vectors obtained from **x** by deleting the state of components c_i and c_k in **x**.

The proof can now be completed by the use of $c_i >_\phi^{cn} c_k$ and Definition 3.10.1.

The converse of Theorem 3.10.4, where the importance ordering implied by Birnbaum's structural importance is the same as that of criticality of nodes, is not true and this follows from the following counter-example:

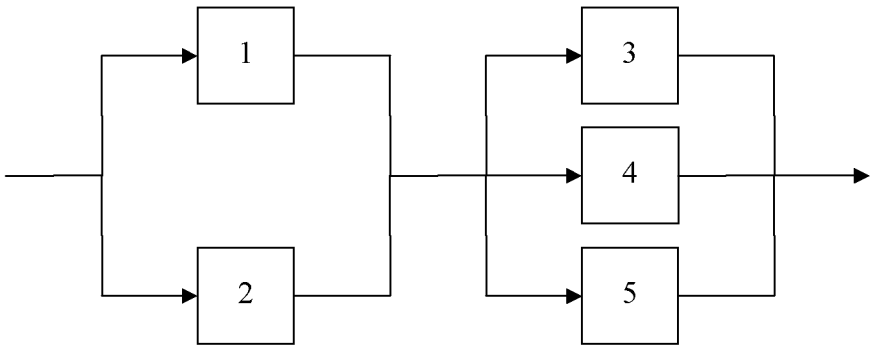

Figure 3.10.1: *Representation of a system as a counter-example for the Converse of Theorem 3.10.4*

We can show that $h_\phi(\mathbf{p}) = (1 - q_1 q_2)(1 - q_3 q_4 q_5)$ with $I_\phi^B(1, \mathbf{p}) = q_2(1 - q_3 q_4 q_5)$ and $I_\phi^B(3, \mathbf{p}) = q_4 q_5 (1 - q_1 q_2)$ so that $I_\phi^B(1) = \frac{7}{16} > \frac{3}{16} = I_\phi^B(3)$. However, we have that $\phi(1,1,0,0,0) = 0 < 1 = \phi(0,1,1,0,0)$ and $\phi(1,0,0,1,0) = 1 > 0 = \phi(0,0,1,1,0)$. Therefore, we cannot claim that either $c_1 >_\phi^{cn} c_3$ or $c_3 >_\phi^{cn} c_1$ holds.

Boland, Proschan and Tong also showed that the converse of Theorem 3.10.2 and Theorem 3.10.3, namely that if component c_i is more criticality of nodes important than component c_k then set of all minimal path (cut) sets containing c_k is a proper subset of the set of all minimal path (cut) sets containing c_i, is not true by means of a counter-example, which is illustrated by Figure 3.10.2.

We can easily verify that $\phi(1_3,0_2,\mathbf{x}) = x_1(1-\bar{x}_4\bar{x}_5\bar{x}_6) \geq x_1(1-\bar{x}_4\bar{x}_5) = \phi(0_3,1_2,\mathbf{x})$ with strict inequality occurring at $x_1 = 1$, $x_4 = 0$, $x_5 = 0$ and $x_6 = 1$, and hence $c_3 >_\phi^{cn} c_2$. However, we have that the minimal path sets $\{1,2,4\}$ and $\{1,2,5\}$ do not contain c_3.

Similarly we have that $c_1 >_\phi^{cn} c_2$ since $\phi(1_1,0_2,\mathbf{x}) = x_3(1-\bar{x}_4\bar{x}_5\bar{x}_6) \geq 0 = \phi(0_1,1_2,\mathbf{x})$ with strict inequality occurring at $x_3 = 1$ and $x_4 = 1$. Minimal cut sets $\{2,3\}$ and $\{2,4,5\}$ do not contain c_1.

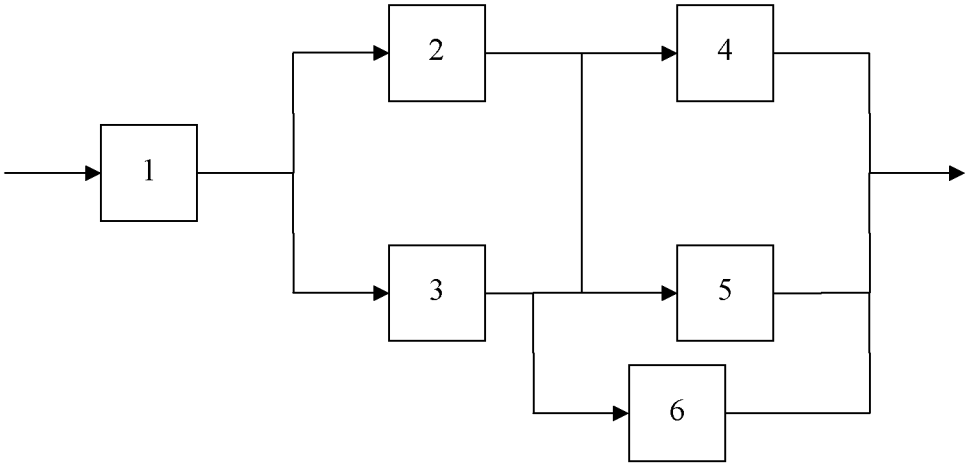

Figure 3.10.2: *Representation of a system as a counter-example for the Converse of Theorem 3.51 and 3.52*

In order to find a necessary and sufficient condition between criticality of nodes importance and the minimal path (cut) sets of components, Koutras, Papadopoulos and Papastavridis [20] devised Theorem 3.10.5:

Theorem 3.10.5:

The following are equivalent:

i. $c_i >_\phi^{cn} c_k$.

ii. For every set ${}^\phi S \subseteq I \setminus \{i,k\}$ such that the set ${}^\phi S \cup \{k\}$ is a cut set, the set ${}^\phi S \cup \{i\}$ is a cut set too. Moreover, there exists a set ${}^\phi S_0 \subseteq I \setminus \{i,k\}$ such that the set ${}^\phi S_0 \cup \{i\}$ is a cut set but the set ${}^\phi S_0 \cup \{k\}$ is not a cut set.

iii. For every set ${}^{\phi}S \subseteq I \setminus \{i,k\}$ such that the set ${}^{\phi}S \cup \{k\}$ is a path set, the set ${}^{\phi}S \cup \{i\}$ is a path set too. Moreover, there exists a set ${}^{\phi}S_0 \subseteq I \setminus \{i,k\}$ such that the set ${}^{\phi}S_0 \cup \{i\}$ is a path set but the set ${}^{\phi}S_0 \cup \{k\}$ is not a path set.

Proof:

We will first show that i. is a necessary and sufficient condition for ii.

Suppose that $c_i >_{\phi}^{cn} c_k$ and that there exists a set ${}^{\phi}S \subseteq I \setminus \{i,k\}$ such that ${}^{\phi}S \cup \{k\}$ is a cut set. Let **x** be a state vector such that $x_j = 0$ for all $j \in {}^{\phi}S$, then $\phi(1_i, 0_k, \mathbf{x}) = 0$ and, by Definition 3.10.1, $\phi(0_i, 1_k, \mathbf{x}) = 0$. Thus ${}^{\phi}S \cup \{i\}$ is a cut set. Also, since $c_i >_{\phi}^{cn} c_k$, there exists state vector z such that $\phi(1_i, 0_k, \mathbf{z}) = 1 > 0 = \phi(0_i, 1_k, \mathbf{z})$. We see that the failure of component c_i leads to the failure of the system whilst the change of state of component c_k from a failed to a functioning state bears no influence on the system. Hence, there exists a set ${}^{\phi}S_0 \subseteq I \setminus \{i,k\}$ such that ${}^{\phi}S_0 \cup \{i\}$ is a cut set and, at the same time, ${}^{\phi}S_0 \cup \{k\}$ is not a cut set. ${}^{\phi}S_0$ corresponds to the set of all failed components in **z**, excluding c_i and c_k.

Next, we assume that ii. is true and let **x** be any state vector.

If we have $\phi(1_i, 0_k, \mathbf{x}) = 1$, then $\phi(1_i, 0_k, \mathbf{x}) \geq \phi(0_i, 1_k, \mathbf{x})$ is true. If we have $\phi(1_i, 0_k, \mathbf{x}) = 0$, define ${}^{\phi}S$ to be the set of all the failed components in **x**, except for c_k, such that ${}^{\phi}S \cup \{k\}$ is a cut set. By assumption, we will also have that ${}^{\phi}S \cup \{i\}$ is a cut set, implying that $\phi(0_i, 1_k, \mathbf{x}) = 0$. Thus $\phi(1_i, 0_k, \mathbf{x}) \geq \phi(0_i, 1_k, \mathbf{x})$ is true. Furthermore, if all the components forming ${}^{\phi}S_0$ are in a failed state, there exists a corresponding state vector **z** such that $\phi(1_i, 0_k, \mathbf{z}) = 1$ and $\phi(0_i, 1_k, \mathbf{z}) = 0$. Hence $c_i >_{\phi}^{cn} c_k$ is true.

We now show that i. is a necessary and sufficient condition for iii.

Suppose that $c_i >_{\phi}^{cn} c_k$ and that there exists a set ${}^{\phi}S \subseteq I \setminus \{i,k\}$ such that ${}^{\phi}S \cup \{k\}$ is a path set. Let **x** be a state vector such that $x_j = 1$ for all $j \in {}^{\phi}S$, then $\phi(0_i,1_k,\mathbf{x}) = 1$ and, by Definition 3.10.1, $\phi(1_i,0_k,\mathbf{x}) = 1$. Thus ${}^{\phi}S \cup \{i\}$ is a path set. Also, since $c_i >_{\phi}^{cn} c_k$, there exists state vector **z** such that $\phi(1_i,0_k,\mathbf{z}) = 1 > 0 = \phi(0_i,1_k,\mathbf{z})$. We see that the failure of component c_i leads to the failure of the system whilst the change of state of component c_k from a failed to a functioning state bears no influence on the system. Hence, there exists a set ${}^{\phi}S_0 \subseteq I \setminus \{i,k\}$ such that ${}^{\phi}S_0 \cup \{i\}$ is a path set and, at the same time, ${}^{\phi}S_0 \cup \{k\}$ is not a path set. ${}^{\phi}S_0$ corresponds to the set of all functioning components in **z**, excluding c_i and c_k.

Next, we assume that iii. is true and let **x** be any state vector.
If we have $\phi(0_i,1_k,\mathbf{x}) = 0$, then $\phi(1_i,0_k,\mathbf{x}) \geq \phi(0_i,1_k,\mathbf{x})$ is true. If we have $\phi(0_i,1_k,\mathbf{x}) = 1$, define ${}^{\phi}S$ to be the set of all functioning components in **x**, except for c_k, such that ${}^{\phi}S \cup \{k\}$ is a path set. By assumption, we will also have that ${}^{\phi}S \cup \{i\}$ is a path set, implying that $\phi(1_i,0_k,\mathbf{x}) = 1$. Thus $\phi(1_i,0_k,\mathbf{x}) \geq \phi(0_i,1_k,\mathbf{x})$ is true.
Furthermore, if all the components forming ${}^{\phi}S_0$ are in a functioning state, there exists a corresponding state vector z such that $\phi(1_i,0_k,\mathbf{z}) = 1$ and $\phi(0_i,1_k,\mathbf{z}) = 0$.
Hence $c_i >_{\phi}^{cn} c_k$ is true.

Corollary 3.10.6:

For components c_i, c_j and c_k, if $c_i >_{\phi}^{cn} c_j$ and $c_j >_{\phi}^{cn} c_k$, then $c_i >_{\phi}^{cn} c_k$.

Proof:

Let ${}^{\phi}S \subseteq I \setminus \{i,k\}$ such that the set ${}^{\phi}S \cup \{k\}$ is a cut set.For $j \notin {}^{\phi}S$, we have that, by applying Theorem 3.10.5 twice, ${}^{\phi}S \cup \{j\}$ is a cut set and hence ${}^{\phi}S \cup \{i\}$ is a cut set too. For $j \in {}^{\phi}S$, we can define the set ${}^{\phi}S_1 \subseteq I \setminus \{i,j\}$ such that ${}^{\phi}S \cup \{k\} = \{{}^{\phi}S_1 \cup \{k\}\} \cup \{j\}$ and since $c_i >_{\phi}^{cn} c_j$ we have that $\{{}^{\phi}S_1 \cup \{k\}\} \cup \{i\}$ is a cut set. Furthermore, as $\{{}^{\phi}S_1 \cup \{k\}\} \cup \{i\} = \{{}^{\phi}S_1 \cup \{i\}\} \cup \{k\}$ we have that ${}^{\phi}S_1 \cup \{i\} \subseteq I \setminus \{j,k\}$ and given that $c_j >_{\phi}^{cn} c_k$ we conclude that $\{{}^{\phi}S_1 \cup \{i\}\} \cup \{j\} = {}^{\phi}S \cup \{i\}$ is a cut set.

Furthermore, define ${}^{\phi}S_0 \subseteq I \setminus \{i,k\}$ such that ${}^{\phi}S_0 \cup \{k\}$ is not a cut set whilst ${}^{\phi}S_0 \cup \{j\}$ is a cut set of ϕ. If $j \notin {}^{\phi}S_0$, then ${}^{\phi}S_0 \subseteq I \setminus \{j,k\}$ exists since $c_j >_{\phi}^{cn} c_k$. Moreover, ${}^{\phi}S_0 \subseteq I \setminus \{i,j\}$ and as $c_i >_{\phi}^{cn} c_j$ we have that ${}^{\phi}S_0 \cup \{i\}$ is a cut set. If $j \in {}^{\phi}S_0$, then define ${}^{\phi}S_0 = {}^{\phi}S_0^* \cup \{j\}$ with ${}^{\phi}S_0^* \subseteq I \setminus \{i,j,k\}$. ${}^{\phi}S_0^*$ exists because $c_j >_{\phi}^{cn} c_k$. Now ${}^{\phi}S_0^* \cup \{k\}$ is not a cut set given that ϕ is a monotone function and $\{{}^{\phi}S_0^* \cup \{j\}\} \cup \{k\}$ is not a cut set. Moreover, ${}^{\phi}S_0^* \cup \{i\}$ is a cut set since ${}^{\phi}S_0 \cup \{j\} = {}^{\phi}S_0^* \cup \{j\}$ is a cut set and $c_i >_{\phi}^{cn} c_j$.

An alternative proof of Corollary 3.10.6, relying solely on Definition 3.10.1, is as follows:

It is sufficient to show that $\phi(1_i,0_k,\mathbf{x}) - \phi(0_i,1_k,\mathbf{x}) \geq 0$ for all state vectors $\mathbf{x}$ with strict inequality occurring at one or more given $\mathbf{x}$. By (2.1.2) we have

$$\phi(1_i,0_k,\mathbf{x}) - \phi(0_i,1_k,\mathbf{x}) = x_j\phi(1_i,1_j,0_k,\mathbf{x}) + \bar{x}_j\phi(1_i,0_j,0_k,\mathbf{x}) - x_j\phi(0_i,1_j,1_k,\mathbf{x}) - \bar{x}_j\phi(0_i,0_j,1_k,\mathbf{x})$$

As $c_i >_{\phi}^{cn} c_j$ and $c_j >_{\phi}^{cn} c_k$ we have that $\phi(1_i,0_j,\mathbf{x}) \geq \phi(0_i,1_j,\mathbf{x})$ and $\phi(1_j,0_k,\mathbf{x}) \geq \phi(0_j,1_k,\mathbf{x})$ and hence

$$\phi(1_i,0_k,\mathbf{x})-\phi(0_i,1_k,\mathbf{x}) \geq x_j\phi(1_i,0_j,1_k,\mathbf{x})+\bar{x}_j\phi(0_i,1_j,0_k,\mathbf{x}) - x_j\phi(1_i,0_j,1_k,\mathbf{x})-\bar{x}_j\phi(0_i,1_j,0_k,\mathbf{x})$$

yielding $\phi(1_i,0_k,\mathbf{x})-\phi(0_i,1_k,\mathbf{x}) \geq 0$ for all state vectors **x**. Strict inequality will obtained at state vector **x** where we have either $\phi(1_i,0_j,\mathbf{x}) > \phi(0_i,1_j,\mathbf{x})$ or $\phi(1_j,0_k,\mathbf{x}) > \phi(0_j,1_k,\mathbf{x})$ occurring.

A downfall of Theorem 3.10.5 is that the results are defined in terms of cut sets. As these sets are contained in a smaller number of minimal cut sets, a computationally more efficient result should follow in Theorem 3.10.7.

Theorem 3.10.7:

The following are equivalent:

i. $c_i >_\phi^{cn} c_k$.

ii. For every set ${}^\phi S^m \subseteq I \setminus \{i,k\}$ such that the set ${}^\phi S^m \cup \{k\}$ is a minimal cut set, the set ${}^\phi S^m \cup \{i\}$ is a cut set too. Moreover, there exists a set ${}^\phi S_0^m \subseteq I \setminus \{i,k\}$ such that the set ${}^\phi S_0^m \cup \{i\}$ is a cut set but the set ${}^\phi S_0^m \cup \{k\}$ is not a cut set.

iii. For every set ${}^\phi S^m \subseteq I \setminus \{i,k\}$ such that the set ${}^\phi S^m \cup \{k\}$ is a minimal path set, the set ${}^\phi S^m \cup \{i\}$ is a path set too. Moreover, there exists a set ${}^\phi S_0^m \subseteq I \setminus \{i,k\}$ such that the set ${}^\phi S_0^m \cup \{i\}$ is a path set but the set ${}^\phi S_0^m \cup \{k\}$ is not a path set.

Proof:

Essentially, in view of Theorem 3.10.5, we need to show that for every set ${}^\phi S^m \subseteq I \setminus \{i,k\}$ such that the set ${}^\phi S^m \cup \{k\}$ is a minimal cut (path) set then there exists a set ${}^\phi S \subseteq I \setminus \{i,k\}$ such that the set ${}^\phi S \cup \{k\}$ is a cut (path) set.

Let ${}^{\phi}S \subseteq I \setminus \{i,k\}$ such that ${}^{\phi}S \cup \{k\}$ is a cut (path) set that is not minimal. Now there exists a set $S \subset {}^{\phi}S \cup \{k\}$ such that S is a minimal cut (path) set. If S does not contain component c_k, then define $S={}^{\phi}S^m$ with ${}^{\phi}S^m \subseteq {}^{\phi}S^m \cup \{i\} \subseteq {}^{\phi}S \cup \{i\}$ and hence ${}^{\phi}S \cup \{i\}$ is a cut (path) set too. If S does contain component c_k, define $S={}^{\phi}S^m \cup \{k\}$ with ${}^{\phi}S^m \subseteq {}^{\phi}S \subseteq I \setminus \{i,k\}$. As S is a cut (path) set we know that under Theorem 3.10.5 part ii (part iii) ${}^{\phi}S^m \cup \{i\}$ is also a cut (path) set. As ${}^{\phi}S^m \cup \{i\} \subseteq {}^{\phi}S \cup \{i\}$, we have that ${}^{\phi}S \cup \{i\}$ is a cut (path) set too.

Meng [21] established also how Criticality of Nodes importance relates to the dual of a system.

Theorem 3.10.8: *Criticality of Nodes Importance under the Dual*
Component c_i is more critical than component c_k under the structure function ϕ, i.e. $c_i >_{\phi}^{cn} c_k$, if and only if component c_i is more critical than component c_k under the dual structure function ϕ^D, i.e. $c_i >_{\phi^D}^{cn} c_k$. Moreover, $c_i =_{\phi}^{cn} c_k$ if and only if $c_i =_{\phi^D}^{cn} c_k$.

Proof:
For $c_i >_{\phi}^{cn} c_k$ we have that $\phi(1_i,0_k,\mathbf{x}) \geq \phi(0_i,1_k,\mathbf{x})$ for all state vectors $\mathbf{x}$ and so $1-\phi(1_i,0_k,\mathbf{x}) \leq 1-\phi(0_i,1_k,\mathbf{x})$. By (2.3.1) we have $\phi^D(0_i,1_k,\bar{\mathbf{x}}) \leq \phi^D(1_i,0_k,\bar{\mathbf{x}})$ for all state vectors $\bar{\mathbf{x}}$. Furthermore, as $\phi(1_i,0_k,\mathbf{z}) > \phi(0_i,1_k,\mathbf{z})$ occurs for some state vector $\mathbf{z}$, we have $\phi^D(0_i,1_k,\bar{\mathbf{z}}) < \phi^D(1_i,0_k,\bar{\mathbf{z}})$ for state vector $\bar{\mathbf{z}}$. Therefore, by Definition 3.10.1, we have $c_i >_{\phi^D}^{cn} c_k$. Assuming that $c_i =_{\phi}^{cn} c_k$ yields $\phi(1_i,0_k,\mathbf{x}) = \phi(0_i,1_k,\mathbf{x})$ for all state vectors $\mathbf{x}$, giving $\phi^D(0_i,1_k,\bar{\mathbf{x}}) = \phi^D(1_i,0_k,\bar{\mathbf{x}})$ for all state vectors $\bar{\mathbf{x}}$ and hence $c_i =_{\phi^D}^{cn} c_k$.

Meng also researched the link between the minimal cut (path) sets of a system and Criticality of Nodes importance. In order to do so, we introduce the following notation:

Let

$$
\begin{aligned}
{}^{\phi}B^{m}_{c_i \setminus c_k} &= \left\{ {}^{\phi}CS^{m}_{j} : i \in {}^{\phi}CS^{m}_{j}, k \notin {}^{\phi}CS^{m}_{j}, j = 1,2,\ldots,s-1,s \right\} \\
&= \left\{ {}^{\phi}CS^{m}_{j}(i \setminus k) : j = 1,2,\ldots,s_{i \setminus k} - 1, s_{i \setminus k} \right\}
\end{aligned}
$$

be the set of all minimal cut sets, denoted by ${}^{\phi}CS^{m}_{j}(i \setminus k)$, containing component c_i but not component c_k. ${}^{\phi}v(i \setminus k)$ denotes the number of minimal cut sets containing component c_i but not component c_k.

Theorem 3.10.9:

Component c_i is more critical than component c_k, i.e. $c_i >^{cn}_{\phi} c_k$, if and only if one of the following conditions hold:

i. ${}^{\phi}B^{m}_{c_k}$ is a proper subset of ${}^{\phi}B^{m}_{c_i}$ i.e. ${}^{\phi}B^{m}_{c_k} \subset {}^{\phi}B^{m}_{c_i}$.

ii. For each ${}^{\phi}CS^{m}_{j}(k \setminus i) \in {}^{\phi}B^{m}_{c_k \setminus c_i}$, there exists ${}^{\phi}CS^{m}_{j}(i \setminus k) \in {}^{\phi}B^{m}_{c_i \setminus c_k}$ such that ${}^{\phi}CS^{m}_{j}(i \setminus k) \setminus \{i\} \subseteq {}^{\phi}CS^{m}_{j}(k \setminus i) \setminus \{k\}$ and ${}^{\phi}CS^{m}_{j}(i \setminus k) \setminus \{i\} \subset {}^{\phi}CS^{m}_{j}(k \setminus i) \setminus \{k\}$ occurs for at least one pair $\left({}^{\phi}CS^{m}_{j}(k \setminus i), {}^{\phi}CS^{m}_{j}(i \setminus k) \right)$

iii. If, under (ii), we have ${}^{\phi}CS^{m}_{j}(i \setminus k) \setminus \{i\} = {}^{\phi}CS^{m}_{j}(k \setminus i) \setminus \{k\}$ holding for all such pairs, then ${}^{\phi}v(k \setminus i) < {}^{\phi}v(i \setminus k)$

Proof:

By Theorem 2.1.23, we note that both ${}^{\phi}B^{m}_{c_k}$ and ${}^{\phi}B^{m}_{c_i}$ are non-empty.

We will first show that $c_i >^{cn}_{\phi} c_k$ implies the above three conditions.

Suppose that $c_i >^{cn}_{\phi} c_k$. If all the minimal cut sets of c_i and c_k are the same i.e. ${}^{\phi}B^{m}_{c_k} = {}^{\phi}B^{m}_{c_i}$ then $\phi(1_i, 0_k, \mathbf{x}) = \phi(0_i, 1_k, \mathbf{x})$ for all state vectors **x** and thus we

contradict our supposition. As $\phi(1_i,0_k,\mathbf{x}) > \phi(0_i,1_k,\mathbf{x})$ for some $\mathbf{x}$, there exists at least one minimal cut set that contains component c_i but not c_k. Hence ${}^{\phi}B^m_{c_k} \subset {}^{\phi}B^m_{c_i}$. Now let ${}^{\phi}CS^m_j(k \setminus i) \in {}^{\phi}B^m_{c_k \setminus c_i}$. We have that $\phi\left(\mathbf{0}^{{}^{\phi}CS^m_j(k\setminus i)},\mathbf{1}\right) = 0$ and $\phi(\mathbf{x}) = 1$ for $\mathbf{x} > \left(\mathbf{0}^{{}^{\phi}CS^m_j(k\setminus i)},\mathbf{1}\right)$. By Definition 2.1.20, we have $\phi\left(\mathbf{0}^{{}^{\phi}CS^m_j(k\setminus i)\setminus\{k\}},\mathbf{1}\right) = 1$ and, as $c_i >^{cn}_{\phi} c_k$, $\phi\left(0_i,\mathbf{0}^{{}^{\phi}CS^m_j(k\setminus i)\setminus\{k\}},\mathbf{1}\right) \le \phi\left(\mathbf{0}^{{}^{\phi}CS^m_j(k\setminus i)},\mathbf{1}\right) = 0$. This implies that there exists ${}^{\phi}CS^m_j(i \setminus k) \in {}^{\phi}B^m_{c_i \setminus c_k}$ such that ${}^{\phi}CS^m_j(i \setminus k)\setminus\{i\} \subseteq {}^{\phi}CS^m_j(k \setminus i)\setminus\{k\}$. So either condition (ii) holds or we have that ${}^{\phi}CS^m_j(i \setminus k)\setminus\{i\} = {}^{\phi}CS^m_j(k \setminus i)\setminus\{k\}$ for all pairs $\left({}^{\phi}CS^m_j(k \setminus i),{}^{\phi}CS^m_j(i \setminus k)\right)$.

For the latter case, there exists a one-to-one mapping between ${}^{\phi}CS^m_j(k \setminus i)$ and ${}^{\phi}CS^m_j(i \setminus k)$ and hence ${}^{\phi}v(k \setminus i) = \left|\ {}^{\phi}B^m_{c_k \setminus c_i}\ \right| \le \left|\ {}^{\phi}B^m_{c_i \setminus c_k}\ \right| = {}^{\phi}v(i \setminus k)$. Assuming that ${}^{\phi}v(k \setminus i) = {}^{\phi}v(i \setminus k)$, there exists some ${}^{\phi}CS^m_j(i \setminus k) \in {}^{\phi}B^m_{c_i \setminus c_k}$ corresponding to ${}^{\phi}CS^m_j(k \setminus i) \in {}^{\phi}B^m_{c_k \setminus c_i}$ such that ${}^{\phi}CS^m_j(k \setminus i)\setminus\{k\} = {}^{\phi}CS^m_j(i \setminus k)\setminus\{i\}$ which, in turn, would imply that $\phi(0_i,1_k,\mathbf{x}) = \phi(1_i,0_k,\mathbf{x}) = 0$ for all state vectors $\mathbf{x}$ resulting from ${}^{\phi}CS^m_j(k \setminus i)$ and ${}^{\phi}CS^m_j(i \setminus k)$ as well as $\phi(0_i,1_k,\mathbf{x}) = \phi(1_i,0_k,\mathbf{x})$ for all the remaining state vectors $\mathbf{x}$. We thus contradict the fact that $c_i >^{cn}_{\phi} c_k$ and hence conclude that ${}^{\phi}v(k \setminus i) < {}^{\phi}v(i \setminus k)$.

We will now demonstrate that each of the above conditions result in $c_i >^{cn}_{\phi} c_k$.

Firstly, the implication that ${}^{\phi}B^m_{c_k} \subset {}^{\phi}B^m_{c_i}$ yields $c_i >^{cn}_{\phi} c_k$ follows directly from Theorem 3.10.3.

Now assume that condition (ii) holds.

We need to show that $\phi(1_i,0_k,\mathbf{x}) \ge \phi(0_i,1_k,\mathbf{x})$ holds for all state vectors $\mathbf{x}$ with strict inequality occurring at some $\mathbf{x}$. We need to consider only those state vectors

$\mathbf{z}$ where $\phi(1_i,0_k,\mathbf{z})=0$. Now either $\phi(1_i,0_k,\mathbf{z})=\phi(1_i,1_k,\mathbf{z})=0$ or $\phi(1_i,0_k,\mathbf{z})<\phi(1_i,1_k,\mathbf{z})=1$ occurs. In the former case, as ϕ is monotone, $\phi(0_i,1_k,\mathbf{z})=0$ and hence $\phi(1_i,0_k,\mathbf{x})\geq\phi(0_i,1_k,\mathbf{x})$ holds for all state vectors $\mathbf{x}$. In the latter case, we can find a minimal cut set ${}^{\phi}CS_j^m(k\setminus i)\in{}^{\phi}B^m_{c_k\setminus c_i}$ such that $x_l=0$ for all $l\in{}^{\phi}CS_j^m(k\setminus i)$ occurs in $\mathbf{z}$. By assumption, there exists ${}^{\phi}CS_j^m(i\setminus k)\in{}^{\phi}B^m_{c_i\setminus c_k}$ such that ${}^{\phi}CS_j^m(i\setminus k)\setminus\{i\}\subseteq{}^{\phi}CS_j^m(k\setminus i)\setminus\{k\}$. This implies that $x_l=0$ for all $l\in{}^{\phi}CS_j^m(i\setminus k)$ occurs in $\mathbf{z}$ as well. Again, as ϕ is monotone, we have $\phi(0_i,1_k,\mathbf{z})\leq\phi\left(\mathbf{0}^{{}^{\phi}CS_j^m(i\setminus k)},\mathbf{z}\right)=0$ and hence $\phi(1_i,0_k,\mathbf{x})\geq\phi(0_i,1_k,\mathbf{x})$ holds for all state vectors $\mathbf{x}$. Furthermore, let ${}^{\phi}CS_{j^*}^m(i\setminus k)\in{}^{\phi}B^m_{c_i\setminus c_k}$ such that ${}^{\phi}CS_{j^*}^m(i\setminus k)\setminus\{i\}\subset{}^{\phi}CS_{j^*}^m(k\setminus i)\setminus\{k\}$ for some ${}^{\phi}CS_{j^*}^m(k\setminus i)\in{}^{\phi}B^m_{c_k\setminus c_i}$. We have that $\phi\left(0_i,1_k,\mathbf{0}^{{}^{\phi}CS_{j^*}^m(i\setminus k)\setminus\{i\}},\mathbf{1}\right)=0$ and $\phi\left(1_i,1_k,\mathbf{0}^{{}^{\phi}CS_{j^*}^m(i\setminus k)\setminus\{i\}},\mathbf{1}\right)=1$. If $\phi\left(1_i,0_k,\mathbf{0}^{{}^{\phi}CS_{j^*}^m(i\setminus k)\setminus\{i\}},\mathbf{1}\right)=0$ then there exists ${}^{\phi}CS_j^m(k\setminus i)\in{}^{\phi}B^m_{c_k\setminus c_i}$ such that ${}^{\phi}CS_j^m(k\setminus i)\setminus\{k\}\subset{}^{\phi}CS_{j^*}^m(i\setminus k)\setminus\{i\}$ which contradicts our assumption. Hence, $\phi\left(1_i,0_k,\mathbf{0}^{{}^{\phi}CS_{j^*}^m(i\setminus k)\setminus\{i\}},\mathbf{1}\right)>\phi\left(0_i,1_k,\mathbf{0}^{{}^{\phi}CS_{j^*}^m(i\setminus k)\setminus\{i\}},\mathbf{1}\right)$ and $c_i>^{cn}_{\phi}c_k$.

Now suppose that condition (iii) holds.

From before, we know that $\phi(1_i,0_k,\mathbf{x})\geq\phi(0_i,1_k,\mathbf{x})$ holds for all state vectors $\mathbf{x}$. From our supposition, we know that for each ${}^{\phi}CS_j^m(k\setminus i)\in{}^{\phi}B^m_{c_k\setminus c_i}$ there exists ${}^{\phi}CS_j^m(i\setminus k)\in{}^{\phi}B^m_{c_i\setminus c_k}$ such that ${}^{\phi}CS_j^m(i\setminus k)\setminus\{i\}={}^{\phi}CS_j^m(k\setminus i)\setminus\{k\}$. As ${}^{\phi}v(k\setminus i)<{}^{\phi}v(i\setminus k)$, it follows that there exists ${}^{\phi}CS_{j^*}^m(i\setminus k)\in{}^{\phi}B^m_{c_i\setminus c_k}$ such that $\phi\left(0_i,1_k,\mathbf{0}^{{}^{\phi}CS_{j^*}^m(i\setminus k)\setminus\{i\}},\mathbf{1}\right)=0$ and $\phi\left(1_i,0_k,\mathbf{0}^{{}^{\phi}CS_{j^*}^m(i\setminus k)\setminus\{i\}},\mathbf{1}\right)=1$. Therefore $c_i>^{cn}_{\phi}c_k$.

Theorem 3.10.9 can also be expressed in terms of minimal path sets.

We define the notation

$$
\begin{aligned}
{}^{\phi}A^{m}_{c_i \setminus c_k} &= \left\{ {}^{\phi}PS^{m}_{j} : i \in {}^{\phi}PS^{m}_{j}, k \notin {}^{\phi}PS^{m}_{j}, j = 1,2,\ldots,u-1,u \right\} \\
&= \left\{ {}^{\phi}PS^{m}_{j}(i \setminus k) : j = 1,2,\ldots,u_{i \setminus k} - 1, u_{i \setminus k} \right\}
\end{aligned}
$$

to be the set of all minimal path sets, denoted by ${}^{\phi}PS^{m}_{j}(i \setminus k)$, containing component c_i but not component c_k. ${}^{\phi}u(i \setminus k)$ denotes the number of minimal path sets containing component c_i but not component c_k.

Corollary 3.10.10:

Component c_i is more critical than component c_k, i.e. $c_i >^{cn}_{\phi} c_k$, if and only if one of the following conditions hold:

i. ${}^{\phi}A^{m}_{c_k}$ is a proper subset of ${}^{\phi}A^{m}_{c_i}$ i.e. ${}^{\phi}A^{m}_{c_k} \subset {}^{\phi}A^{m}_{c_i}$.

ii. For each ${}^{\phi}PS^{m}_{j}(k \setminus i) \in {}^{\phi}A^{m}_{c_k \setminus c_i}$, there exists ${}^{\phi}PS^{m}_{j}(i \setminus k) \in {}^{\phi}A^{m}_{c_i \setminus c_k}$ such that ${}^{\phi}PS^{m}_{j}(i \setminus k) \setminus \{i\} \subseteq {}^{\phi}PS^{m}_{j}(k \setminus i) \setminus \{k\}$ and ${}^{\phi}PS^{m}_{j}(i \setminus k) \setminus \{i\} \subset {}^{\phi}PS^{m}_{j}(k \setminus i) \setminus \{k\}$ occurs for at least one pair $\left({}^{\phi}PS^{m}_{j}(k \setminus i), {}^{\phi}PS^{m}_{j}(i \setminus k) \right)$

iii. If, under (ii), we have ${}^{\phi}PS^{m}_{j}(i \setminus k) \setminus \{i\} = {}^{\phi}PS^{m}_{j}(k \setminus i) \setminus \{k\}$ holding for all such pairs, then ${}^{\phi}u(k \setminus i) < {}^{\phi}u(i \setminus k)$

Proof:

Suppose $c_i >^{cn}_{\phi} c_k$. By Theorem 3.10.8, $c_i >^{cn}_{\phi^D} c_k$. By Theorem 3.10.9, ${}^{\phi^D}B^{m}_{c_k} \subset {}^{\phi^D}B^{m}_{c_i}$ and there exists minimal cut sets ${}^{\phi^D}CS^{m}_{j}(k \setminus i) \in {}^{\phi^D}B^{m}_{c_k \setminus c_i}$ and ${}^{\phi^D}CS^{m}_{j}(i \setminus k) \in {}^{\phi^D}B^{m}_{c_i \setminus c_k}$ that behave according to Theorem 3.10.9. By Lemma 2.3.6, ${}^{\phi}A^{m}_{c_k} \subset {}^{\phi}A^{m}_{c_i}$ and there exists ${}^{\phi}PS^{m}_{j}(k \setminus i) \in {}^{\phi}A^{m}_{c_k \setminus c_i}$ and ${}^{\phi}PS^{m}_{j}(i \setminus k) \in {}^{\phi}A^{m}_{c_i \setminus c_k}$ behaving as required.

Now assume that one of conditions (i), (ii) and (iii) hold. By Lemma 2.3.6 ${}^{\phi^D}B^{m}_{c_k} \subset {}^{\phi^D}B^{m}_{c_i}$ and there exists minimal cut sets ${}^{\phi^D}CS^{m}_{j}(k \setminus i) \in {}^{\phi^D}B^{m}_{c_k \setminus c_i}$ and

${}^{\phi^D}CS_j^m(i \setminus k) \in {}^{\phi^D}B^m_{c_i \setminus c_k}$ that behave according to Theorem 3.10.9, hence $c_i >^{cn}_{\phi^D} c_k$. By Theorem 3.10.8 our result follows.

Corollary 3.10.11:

Components c_i and c_k are of equal criticality of nodes important i.e. $c_i =^{cn}_{\phi} c_k$ if and only if one of the following conditions hold:

i. ${}^{\phi}B^m_{c_k} = {}^{\phi}B^m_{c_i}$

ii. ${}^{\phi}CS_j^m(i \setminus k)$ can be obtained from ${}^{\phi}CS_j^m(k \setminus i)$ by replacing component c_k with c_i in each minimal cut set ${}^{\phi}CS_j^m(k \setminus i)$ i.e. for each ${}^{\phi}CS_j^m(k \setminus i) \in {}^{\phi}B^m_{c_k \setminus c_i}$, there exists ${}^{\phi}CS_j^m(i \setminus k) \in {}^{\phi}B^m_{c_i \setminus c_k}$ such that ${}^{\phi}CS_j^m(i \setminus k) \setminus \{i\} = {}^{\phi}CS_j^m(k \setminus i) \setminus \{k\}$.

Proof:

Let $c_i =^{cn}_{\phi} c_k$. From Definition 3.10.1, we know that $\phi(1_i, 0_k, \mathbf{x}) = \phi(0_i, 1_k, \mathbf{x})$ holds for all state vectors **x**. Moreover, for each minimal cut set containing c_k, there exists a corresponding minimal cut set containing c_i. Thus, for each ${}^{\phi}CS_j^m(k \setminus i)$, we have $\phi\left(1_i, 1_k, \mathbf{0}^{{}^{\phi}CS_j^m(k \setminus i) \setminus \{k\}}, \mathbf{1}\right) = 1$ and $\phi\left(1_i, 0_k, \mathbf{0}^{{}^{\phi}CS_j^m(k \setminus i) \setminus \{k\}}, \mathbf{1}\right) = 0$ yielding $\phi\left(0_i, 1_k, \mathbf{0}^{{}^{\phi}CS_j^m(k \setminus i) \setminus \{k\}}, \mathbf{1}\right) = 0$. Hence, ${}^{\phi}CS_j^m(i \setminus k) \setminus \{i\} = {}^{\phi}CS_j^m(k \setminus i) \setminus \{k\}$ as required.

However, if there does not exist a single minimal cut set containing c_k but not c_i, then all minimal cut sets containing c_k must contain c_i and thus ${}^{\phi}B^m_{c_k} = {}^{\phi}B^m_{c_i}$.

The reverse implication is of a direct consequence to the statements above i.e. if condition (i) or (ii) hold, then $\phi(1_i, 0_k, \mathbf{x}) = \phi(0_i, 1_k, \mathbf{x})$ holds for all state vectors **x** and the result follows.

The proof of Corollary 3.10.12 follows directly from Corollary 3.10.11 and analogously from the proof of Corollary 3.10.10.

Corollary 3.10.12:

Components c_i and c_k are of equal criticality of nodes important i.e. $c_i =^{cn}_{\phi} c_k$ if and only if:

i. ${}^{\phi}A^m_{c_k} = {}^{\phi}A^m_{c_i}$

ii. ${}^{\phi}PS^m_j(i \setminus k)$ can be obtained from ${}^{\phi}PS^m_j(k \setminus i)$ by replacing component c_k with c_i in each minimal path set ${}^{\phi}PS^m_j(k \setminus i)$ i.e. for each ${}^{\phi}PS^m_j(k \setminus i) \in {}^{\phi}A^m_{c_k \setminus c_i}$, there exists ${}^{\phi}PS^m_j(i \setminus k) \in {}^{\phi}A^m_{c_i \setminus c_k}$ such that ${}^{\phi}PS^m_j(i \setminus k) \setminus \{i\} = {}^{\phi}PS^m_j(k \setminus i) \setminus \{k\}$.

Proof:

Suppose $c_i =^{cn}_{\phi} c_k$ then, by Theorem 3.10.8, we have $c_i =^{cn}_{\phi^D} c_k$. By Corollary 3.10.11 and Lemma 2.3.6, we obtained conditions (i) and (ii).

Now assume either conditions (i) or (ii) hold. By Lemma 2.3.6 and Corollary 3.10.11, it follows immediately that $\phi^D(1_i, 0_k, \bar{\mathbf{x}}) = \phi^D(0_i, 1_k, \bar{\mathbf{x}})$ holds for all state vectors $\bar{\mathbf{x}}$ and therefore $c_i =^{cn}_{\phi^D} c_k$ yielding, by Theorem 3.10.5, $c_i =^{cn}_{\phi} c_k$.

Meng went on to establish a relationship between Criticality of Nodes and Butler's Cut importance.

Lemma 3.10.13:

For components c_i and c_k under structure function ϕ, we have that if $c_i >^{cn}_{\phi} c_k$ then $\left({}^{\phi}d^k_{11}, {}^{\phi}d^k_{12}, \ldots, {}^{\phi}d^k_{1n-1}, {}^{\phi}d^k_{1n}\right) \prec \left({}^{\phi}d^i_{11}, {}^{\phi}d^i_{12}, \ldots, {}^{\phi}d^i_{1n-1}, {}^{\phi}d^i_{1n}\right)$ where the term ${}^{\phi}d^i_{jr}$ is defined under Definition 3.6.1 and operator $\prec$ denotes the lexicographical ordering of vectors.

Proof:

As $c_i >_{\phi}^{cn} c_k$, we have that either condition (i), (ii) or (iii) of Theorem 3.10.9 holds. If condition (i) of Theorem 3.10.8 holds i.e. ${}^{\phi}B_{c_k}^m \subset {}^{\phi}B_{c_i}^m$, then we have that ${}^{\phi}d_{1r}^i \geq {}^{\phi}d_{1r}^k$ for $r = 1,2,\ldots,n-1,n$ with strict inequality occurring at some r giving $\left({}^{\phi}d_{11}^k, {}^{\phi}d_{12}^k, \ldots, {}^{\phi}d_{1n-1}^k, {}^{\phi}d_{1n}^k\right) \prec \left({}^{\phi}d_{11}^i, {}^{\phi}d_{12}^i, \ldots, {}^{\phi}d_{1n-1}^i, {}^{\phi}d_{1n}^i\right)$.

Suppose condition (ii) or (iii) of Theorem 3.10.9 holds. By supposition, ${}^{\phi}B_{c_k \setminus c_i}^m$ is non-empty. As $c_i >_{\phi}^{cn} c_k$, we have ${}^{\phi}d_{11}^k = 0$. If ${}^{\phi}d_{11}^i = 1$, then our result follows. For ${}^{\phi}d_{11}^k = {}^{\phi}d_{11}^i = 0$, let r be the first index of the set $\{2,3,\ldots,n-1,n\}$ such that ${}^{\phi}d_{1r}^k > 0$. For ${}^{\phi}CS_j^m(k \setminus i) \in {}^{\phi}B_{c_k \setminus c_i}^m$ with cardinality $\left| {}^{\phi}CS_j^m(k \setminus i) \right| = r$, there exists ${}^{\phi}CS_j^m(i \setminus k) \in {}^{\phi}B_{c_i \setminus c_k}^m$ such that ${}^{\phi}CS_j^m(i \setminus k) \setminus \{i\} \subseteq {}^{\phi}CS_j^m(k \setminus i) \setminus \{k\}$.

For ${}^{\phi}CS_j^m(i \setminus k) \setminus \{i\} \subset {}^{\phi}CS_j^m(k \setminus i) \setminus \{k\}$ holding for at least one pair $\left({}^{\phi}CS_j^m(k \setminus i), {}^{\phi}CS_j^m(i \setminus k)\right)$ with $\left| {}^{\phi}CS_j^m(k \setminus i) \right| = r$ then ${}^{\phi}d_{1r_0}^i > 0$ for $r_0 < r$ and so $\left({}^{\phi}d_{11}^k, {}^{\phi}d_{12}^k, \ldots, {}^{\phi}d_{1n-1}^k, {}^{\phi}d_{1n}^k\right) \prec \left({}^{\phi}d_{11}^i, {}^{\phi}d_{12}^i, \ldots, {}^{\phi}d_{1n-1}^i, {}^{\phi}d_{1n}^i\right)$.

For ${}^{\phi}CS_j^m(i \setminus k) \setminus \{i\} = {}^{\phi}CS_j^m(k \setminus i) \setminus \{k\}$ holding for all pairs, $\left| {}^{\phi}CS_j^m(i \setminus k) \right| = r$ holds. Assume that for ${}^{\phi}CS_j^m(i) \in {}^{\phi}B_{c_i}^m$ we have $\left| {}^{\phi}CS_j^m(i) \right| \geq r$ otherwise, if $\left| {}^{\phi}CS_j^m(i) \right| \leq r-1$, then our conclusion holds. Since each ${}^{\phi}CS_j^m(k \setminus i) \in {}^{\phi}B_{c_k \setminus c_i}^m$ corresponds to one ${}^{\phi}CS_j^m(i \setminus k) \in {}^{\phi}B_{c_i \setminus c_k}^m$ and as ${}^{\phi}v(k \setminus i) < {}^{\phi}v(i \setminus k)$, we must have either ${}^{\phi}d_{1r}^i > {}^{\phi}d_{1r}^k$ or ${}^{\phi}d_{1r}^i = {}^{\phi}d_{1r}^k$. For the former case our result follows directly. In the latter case, we then re-apply the above mentioned arguments to the next non-zero term ${}^{\phi}d_{1w}^k$ for $w > r$ in $\left({}^{\phi}d_{11}^k, {}^{\phi}d_{12}^k, \ldots, {}^{\phi}d_{1n-1}^k, {}^{\phi}d_{1n}^k\right)$. Clearly, as ${}^{\phi}v(k \setminus i) < {}^{\phi}v(i \setminus k)$, there must exist an index $w_0 \in \{r, r+1, \ldots, n-1, n\}$ such that ${}^{\phi}d_{1w_0}^i > {}^{\phi}d_{1w_0}^k$ and ${}^{\phi}d_{1r}^i = {}^{\phi}d_{1r}^k$ for all $r < w_0$. Hence our conclusion will follow.

Theorem 3.10.14: *Criticality of Nodes versus Butler's Cut Importance*

If $c_i >_{\phi}^{cn} c_k$ then $c_i >_{\phi}^{BC} c_k$.

Proof:

Suppose that $c_i >_{\phi}^{cn} c_k$. From Lemma 3.10.13, we have that there exists some index $w_0 \in \{1,2,\ldots,n-1,n\}$ such that ${}^{\phi}d_{1w_0}^{i} > {}^{\phi}d_{1w_0}^{k}$ and ${}^{\phi}d_{1r}^{i} = {}^{\phi}d_{1r}^{k}$ for all $r < w_0$. Furthermore, if ${}^{\phi}d_{jr}^{i} = {}^{\phi}d_{jr}^{k}$ for all $2 \le j \le s$ and $r < w_0$, then ${}^{\phi}b_{r}^{k} = {}^{\phi}b_{r}^{i}$ for $r < w_0$ and ${}^{\phi}b_{w_0}^{k} < {}^{\phi}b_{w_0}^{i}$ leading to ${}^{\phi}\mathbf{b}^{k} \prec^{\phi} \mathbf{b}^{i}$ and hence $c_i >_{\phi}^{BC} c_k$.

Clearly, for the union of *j* minimal cut sets to have size *r*, then each constituent minimal cut set must have a size less than *r*.

From the proof of Lemma 3.10.13, it follows that there is a one-to-one and onto mapping from $\left\{ {}^{\phi}CS_j^m \in {}^{\phi}B_{c_k}^m : \left| {}^{\phi}CS_j^m \right| < w_0 \right\}$ to $\left\{ {}^{\phi}CS_j^m \in {}^{\phi}B_{c_i}^m : \left| {}^{\phi}CS_j^m \right| < w_0 \right\}$.

Thus, by the definition of ${}^{\phi}d_{jr}^{i}$ we have that ${}^{\phi}d_{jr}^{i} = {}^{\phi}d_{jr}^{k}$ for all $2 \le j \le s$ and $r < w_0$.

Meng also developed further relationships between Criticality of Nodes and Birnbaum importance. As can be seen Theorem 3.10.15 generalises Theorem 3.10.4.

Theorem 3.10.15:

If $c_i >_{\phi}^{cn} c_k$, then $I_{\phi}^{B}(i,\mathbf{p}) > I_{\phi}^{B}(k,\mathbf{p})$ for $\mathbf{p} = (p,p,\ldots,p,p)$ and $0 \le p \le 1$.

Proof:

From (3.1.5), (2.1.5) and (2.1.6) we have

$$I_{\phi}^{B}(i,\mathbf{p}) = p_k E\left[\phi(1_i,1_k,\mathbf{x})\right] + q_k E\left[\phi(1_i,0_k,\mathbf{x})\right] - p_k E\left[\phi(0_i,1_k,\mathbf{x})\right] - q_k E\left[\phi(0_i,0_k,\mathbf{x})\right]$$

Hence

$$I_{\phi}^{B}(i,\mathbf{p}) - I_{\phi}^{B}(k,\mathbf{p}) = E\left[\phi(1_i,0_k,\mathbf{x})\right] - E\left[\phi(0_i,1_k,\mathbf{x})\right] + (p_k - p_i) \times \left\{ E\left[\phi(1_i,1_k,\mathbf{x})\right] - E\left[\phi(1_i,0_k,\mathbf{x})\right] - E\left[\phi(0_i,1_k,\mathbf{x})\right] + E\left[\phi(1_i,0_k,\mathbf{x})\right] \right\}$$

Letting $\mathbf{p} = (p,p,\ldots,p,p)$ and $0 \le p \le 1$ as well as the fact that $c_i >_{\phi}^{cn} c_k$, we obtain $I_{\phi}^{B}(i,\mathbf{p}) - I_{\phi}^{B}(k,\mathbf{p}) = E\left[\phi(1_i,0_k,\mathbf{x}) - \phi(0_i,1_k,\mathbf{x})\right] > 0$ and the result follows.

3.11 Meng's Criticality Ranking of Importance

Meng [22] continued researching further results linking Criticality of Nodes, Butler's cut and Birnbaum's structural importance. In order to best express these results, Meng devised an alternative criticality importance ranking.

Definition 3.11.1: *Meng's Criticality Ranking*

Component c_i is said to be more important than component c_k, denoted $c_i >_\phi^{MC} c_k$, under a system with structure function ϕ and vector of component availabilities **p** if and only if $I_\phi^B(i,(\alpha_k,\mathbf{p})) > I_\phi^B(k,(\alpha_i,\mathbf{p}))$ where $\alpha_i = \alpha_k = \alpha$ for all $\alpha \in [0,1]$ and recall that $(\alpha_i,\mathbf{p})$ is the vector of component availabilities with α being the availability of component c_i.

For our audio playback system, recall that $I_\phi^B(2,\mathbf{p}) = p_1(1-q_3q_4)$ and $I_\phi^B(3,\mathbf{p}) = p_1p_2q_4$. Thus we have that

$$p_1p_4 + \alpha p_1q_4 = I_\phi^B(2,(\alpha_3,\mathbf{p})) > I_\phi^B(3,(\alpha_2,\mathbf{p})) = \alpha p_1q_4$$

and hence $c_2 >_\phi^{MC} c_3$.

Meng also define his ranking in terms of the system availability.

Theorem 3.11.2:

If $c_i >_\phi^{MC} c_k$ then $h_\phi(\alpha_i,\beta_k,\mathbf{p}) > h_\phi(\beta_i,\alpha_k,\mathbf{p})$ for all $0 \le \beta < \alpha \le 1$.

Proof:

By (3.1.5), (2.1.5) and (2.1.6) we have

$$I_\phi^B(i,(\alpha_i,\mathbf{p})) = \alpha h_\phi(1_i,1_k,\mathbf{p}) + (1-\alpha)h_\phi(1_i,0_k,\mathbf{p}) - \alpha h_\phi(0_i,1_k,\mathbf{p}) - (1-\alpha)h_\phi(0_i,0_k,\mathbf{p})$$

Hence, as $c_i >_{\phi}^{MC} c_k$, we have that

$I_{\phi}^{B}(i,(\alpha_k,\mathbf{p}))-I_{\phi}^{B}(k,(\alpha_i,\mathbf{p}))=h_{\phi}(1_i,0_k,\mathbf{p})-h_{\phi}(0_i,1_k,\mathbf{p})>0$ for all $\alpha\in[0,1]$.

Again, by the pivot decomposition of the availability function h_{ϕ}, we obtain

$$h_{\phi}(\alpha_i,\beta_k,\mathbf{p})=\alpha\beta h_{\phi}(1_i,1_k,\mathbf{p})+\alpha(1-\beta)h_{\phi}(1_i,0_k,\mathbf{p})$$
$$+(1-\alpha)\beta h_{\phi}(0_i,1_k,\mathbf{p})+(1-\alpha)(1-\beta)h_{\phi}(0_i,0_k,\mathbf{p})$$

and so $h_{\phi}(\alpha_i,\beta_k,\mathbf{p})-h_{\phi}(\beta_i,\alpha_k,\mathbf{p})=(\alpha-\beta)\{h_{\phi}(1_i,0_k,\mathbf{p})-h_{\phi}(0_i,1_k,\mathbf{p})\}>0$.

We also have that Meng's criticality importance ranking is invariant under the dual system.

Theorem 3.11.3: *Meng's Criticality Importance Ranking under the Dual System*

$c_i >_{\phi^D}^{MC} c_k$ occurs if and only if $c_i >_{\phi}^{MC} c_k$.

Proof:

The result follows directly from Definition 3.11.1 and (3.1.9).

We can also express Meng's criticality importance ranking for system with modules.

Theorem 3.11.4: *Meng's Criticality Importance Ranking for System with Modules*

For components c_i and c_k contained in module m_j with structure function ϕ_j within a system with structure function ψ and vector of component probabilities $\mathbf{p}$, we have $c_i >_{\phi}^{MC} c_k$ if and only if $c_i >_{\phi_j}^{MC} c_k$

Proof:

From Definition 3.11.1 and (3.1.12) we have $c_i >_{\phi}^{MC} c_k$ occurs if and only if

$I_{\psi}^{B}(j,\mathbf{p})I_{\phi_j}^{B}(i,(\alpha_k,\mathbf{p}_j))>I_{\psi}^{B}(j,\mathbf{p})I_{\phi_j}^{B}(k,(\alpha_i,\mathbf{p}_j))$ i.e. if and only if

$I^B_{\phi_j}\left(i,\left(\alpha_k,\mathbf{p}_j\right)\right) > I^B_{\phi_j}\left(k,\left(\alpha_i,\mathbf{p}_j\right)\right)$. By Definition 3.11.1, this is the same as $c_i >^{MC}_{\phi_j} c_k$.

A more efficient result for determining Meng's criticality importance ranking for component contained in different modules is thus far elusive.

Meng, in Theorem 3.11.6, also found that his criticality importance ranking implied Butler's cut importance ranking under suitable conditions. To do so, new notation is needed.

For a system with structure function ϕ comprising of n components and containing ${}^{\phi}v$ minimal cut sets, let ${}^{\phi}d^{i\backslash k}_{jr}$ denote the number of collections of j distinct minimal cut sets such that the union of sets within each collection contains exactly r components including component c_i but not component c_k and let ${}^{\phi}d^{ik}_{jr}$ denote the number of collections of j distinct minimal cut sets such that the union of sets within each collection contains exactly r components including component c_i and component c_k, where $j = 1,2,\ldots,{}^{\phi}v-1,{}^{\phi}v$ and $r = 1,2,\ldots,n-1,n$. Also, let ${}^{\phi}b^{i\backslash k}_r = \sum_{j=1}^{s}(-1)^{j-1}\,{}^{\phi}d^{i\backslash k}_{jr}$ and define ${}^{\phi}\mathbf{b}^{i\backslash k} = \left({}^{\phi}b^{i\backslash k}_1, {}^{\phi}b^{i\backslash k}_2, \ldots, {}^{\phi}b^{i\backslash k}_{n-1}, {}^{\phi}b^{i\backslash k}_n\right)$.

Lemma 3.11.5:

For $i,k \in I$, $j = 1,2,\ldots,{}^{\phi}v-1,{}^{\phi}v$ and $r = 1,2,\ldots,n-1,n$, we have

i. ${}^{\phi}d^{i}_{jr} = {}^{\phi}d^{i\backslash k}_{jr} + {}^{\phi}d^{ik}_{jr}$

ii. ${}^{\phi}b^{i}_r - {}^{\phi}b^{k}_r = {}^{\phi}b^{i\backslash k}_r - {}^{\phi}b^{k\backslash i}_r = \sum_{j=1}^{s}(-1)^{j-1}\left\{{}^{\phi}d^{i\backslash k}_{jr} - {}^{\phi}d^{k\backslash i}_{jr}\right\}$

iii. ${}^{\phi}\mathbf{b}^{k} \prec^{\phi} \mathbf{b}^{i}$ if and only if ${}^{\phi}\mathbf{b}^{k\backslash i} \prec^{\phi} \mathbf{b}^{i\backslash k}$

Proof:

(i) follows from the definition of ${}^{\phi}d_{jr}^{i}$, ${}^{\phi}d_{jr}^{i\backslash k}$ and ${}^{\phi}d_{jr}^{ik}$ directly.

Also, (ii) holds since

$$
\begin{aligned}
{}^{\phi}b_r^i - {}^{\phi}b_r^k &= \sum_{j=1}^{s}(-1)^{j-1}\left\{{}^{\phi}d_{jr}^{i} - {}^{\phi}d_{jr}^{k}\right\} = \sum_{j=1}^{s}(-1)^{j-1}\left\{\left({}^{\phi}d_{jr}^{i\backslash k} + {}^{\phi}d_{jr}^{ik}\right) - \left({}^{\phi}d_{jr}^{k\backslash i} + {}^{\phi}d_{jr}^{ki}\right)\right\} \\
&= \sum_{j=1}^{s}(-1)^{j-1}\left\{{}^{\phi}d_{jr}^{i\backslash k} - {}^{\phi}d_{jr}^{k\backslash i}\right\} = {}^{\phi}b_r^{i\backslash k} - {}^{\phi}b_r^{k\backslash i}
\end{aligned}
$$

Now suppose that ${}^{\phi}\mathbf{b}^{k} \prec {}^{\phi}\mathbf{b}^{i}$. This can occur if and only if there exists an index $r_0 \in \{1,2,\ldots,n-1,n\}$ such that ${}^{\phi}b_{r_0}^{i} > {}^{\phi}b_{r_0}^{k}$ and ${}^{\phi}b_{r}^{i} = {}^{\phi}b_{r}^{k}$ for $r < r_0$ which, from (ii), occurs if and only if ${}^{\phi}b_{r_0}^{i\backslash k} > {}^{\phi}b_{r_0}^{k\backslash i}$ and ${}^{\phi}b_{r}^{i\backslash k} = {}^{\phi}b_{r}^{k\backslash i}$ for $r < r_0$ i.e. ${}^{\phi}\mathbf{b}^{k\backslash i} \prec {}^{\phi}\mathbf{b}^{k\backslash i}$.

Theorem 3.11.6: *Butler's Cut Importance versus Meng's Criticality Ranking*
For p sufficiently close to unity, $\mathbf{p} = (p,p,\ldots,p,p)$ and $\alpha \in [0,1]$ we have that $c_i >_{\phi}^{BC} c_k$ if and only if $c_i >_{\phi}^{MC} c_k$ if and only if $I_{\phi}^{B}(i,(\alpha_k,\mathbf{p})) > I_{\phi}^{B}(k,(\alpha_i,\mathbf{p}))$.

Proof:

Let $\alpha,\beta \in [0,1]$ and $\mathbf{p} = (p_1,p_2,\ldots,p_{n-1},p_n)$. From the proof of Lemma 3.27, we have that for

$$
I_{\phi}^{B}(i,\mathbf{p}) = \frac{\partial h_{\phi}(\mathbf{p})}{\partial p_i} = \sum_{j=1}^{{}^{\phi}v}(-1)^{j}\frac{\partial\,{}^{\phi}D_j}{\partial p_i} = \sum_{j=1}^{{}^{\phi}v}(-1)^{j-1}\sum_{1\le l_1<l_2<\ldots<l_{j-1}<l_j\le {}^{\phi}v}\ \prod_{\substack{t\in\bigcup_{k=1}^{j}{}^{\phi}CS_{l_k}^{m} \\ t\neq i}}(1-p_t)
$$
$$
i\in\bigcup_{k=1}^{j}{}^{\phi}CS_{l_k}^{m}
$$

Recalling the definition of ${}^{\phi}d_{jr}^{i}$ from Definition 3.6.1, that ${}^{\phi}d_{jr}^{i} = {}^{\phi}d_{jr}^{i\backslash k} + {}^{\phi}d_{jr}^{ik}$ from Lemma 3.11.5 and letting $p_k = \beta$ with $p_t = p$ for $t \in I\backslash\{i,k\}$, we have

$$
I_{\phi}^{B}(i,(\beta_k,\mathbf{p})) = \sum_{r=1}^{n}\sum_{j=1}^{{}^{\phi}v}(-1)^{j-1}\,{}^{\phi}d_{jr}^{ik}(1-\beta)(1-p)^{r-2} + \sum_{r=1}^{n}\sum_{j=1}^{{}^{\phi}v}(-1)^{j-1}\,{}^{\phi}d_{jr}^{i\backslash k}(1-p)^{r-1}
$$

Similarly we also obtain

$$
I_{\phi}^{B}(k,(\alpha_i,\mathbf{p})) = \sum_{r=1}^{n}\sum_{j=1}^{{}^{\phi}v}(-1)^{j-1}\,{}^{\phi}d_{jr}^{ik}(1-\alpha)(1-p)^{r-2} + \sum_{r=1}^{n}\sum_{j=1}^{{}^{\phi}v}(-1)^{j-1}\,{}^{\phi}d_{jr}^{k\backslash i}(1-p)^{r-1}
$$

Hence,

$$I_\phi^B\left(i,(\beta_k,\mathbf{p})\right)-I_\phi^B\left(k,(\alpha_i,\mathbf{p})\right)=\sum_{r=1}^{n}\sum_{j=1}^{{}^{\phi}v}(-1)^{j-1}\,{}^{\phi}d_{jr}^{ik}(\alpha-\beta)(1-p)^{r-2}$$
$$+\sum_{r=1}^{n}\sum_{j=1}^{{}^{\phi}v}(-1)^{j-1}\left({}^{\phi}d_{jr}^{i\backslash k}-{}^{\phi}d_{jr}^{k\backslash i}\right)(1-p)^{r-1}$$

By Definition 3.6.1 and Lemma 3.11.5, $c_i >_\phi^{BC} c_k$ occurs if and only if ${}^{\phi}\mathbf{b}^k \prec {}^{\phi}\mathbf{b}^i$ if and only if ${}^{\phi}\mathbf{b}^{k\backslash i} \prec {}^{\phi}\mathbf{b}^{i\backslash k}$. Also as ${}^{\phi}b_r^{i\backslash k}-{}^{\phi}b_r^{k\backslash i}=\sum_{j=1}^{{}^{\phi}v}(-1)^{j-1}\left\{{}^{\phi}d_{jr}^{i\backslash k}-{}^{\phi}d_{jr}^{k\backslash i}\right\}$ and letting $\alpha=\beta$, we have $I_\phi^B\left(i,(\alpha_k,\mathbf{p})\right)-I_\phi^B\left(k,(\alpha_i,\mathbf{p})\right)=\sum_{r=1}^{n}\left({}^{\phi}b_r^{i\backslash k}-{}^{\phi}b_r^{k\backslash i}\right)(1-p)^{r-1}>0$ i.e. $I_\phi^B\left(i,(\alpha_k,\mathbf{p})\right)>I_\phi^B\left(k,(\alpha_i,\mathbf{p})\right)$ and therefore, by Definition 3.11.1, $c_i >_\phi^{MC} c_k$.

The reverse implication follows from the fact that ${}^{\phi}\mathbf{b}^{k\backslash i} \prec {}^{\phi}\mathbf{b}^{i\backslash k}$ occurs when $I_\phi^B\left(i,(\alpha_k,\mathbf{p})\right)-I_\phi^B\left(k,(\alpha_i,\mathbf{p})\right)=\sum_{r=1}^{n}\left({}^{\phi}b_r^{i\backslash k}-{}^{\phi}b_r^{k\backslash i}\right)(1-p)^{r-1}>0$ and p is sufficiently close to unity.

Theorem 3.11.6 is a more general result than Theorem 3.6.5 as the availability of components c_i and c_k can take on any value between 0 and 1, instead of being sufficiently close to unity.

Meng also established that the criticality of nodes ranking and his criticality ranking are equivalent. This is a consequence of Theorem 3.11.8.

Lemma 3.11.7:

$c_i >_\phi^{cn} c_k$ if and only if $h_\phi(\alpha_i,\beta_k,\mathbf{p})\geq h_\phi(\beta_i,\alpha_k,\mathbf{p})$ holds for all $0<\beta<\alpha<1$ and all **p** with strict inequality occurring at some known **p**.

Proof:

From the proof of Theorem 3.11.2, we have

$$h_\phi(\alpha_i,\beta_k,\mathbf{p})-h_\phi(\beta_i,\alpha_k,\mathbf{p})=(\alpha-\beta)\left\{h_\phi(1_i,0_k,\mathbf{p})-h_\phi(0_i,1_k,\mathbf{p})\right\}$$
$$=(\alpha-\beta)\,E\left[\phi(1_i,0_k,\mathbf{x})-\phi(0_i,1_k,\mathbf{x})\right]$$

Since $c_i >_{\phi}^{cn} c_k$ and $0 < \beta < \alpha < 1$, our result follows.

Theorem 3.11.8: *Criticality of Nodes versus Meng's Criticality Ranking*

$c_i >_{\phi}^{cn} c_k$ if and only if $c_i >_{\phi}^{MC} c_k$ if and only if $I_{\phi}^{B}(i,(\alpha_k,\mathbf{p})) > I_{\phi}^{B}(k,(\alpha_i,\mathbf{p}))$.

Proof:

From the proof of Theorem 3.11.2 we have that

$$I_{\phi}^{B}(i,(\alpha_k,\mathbf{p})) - I_{\phi}^{B}(k,(\alpha_i,\mathbf{p})) = h_{\phi}(1_i,0_k,\mathbf{p}) - h_{\phi}(0_i,1_k,\mathbf{p}) = E[\phi(1_i,0_k,\mathbf{x}) - \phi(0_i,1_k,\mathbf{x})]$$

Now $c_i >_{\phi}^{cn} c_k$ occurs if and only if $\phi(1_i,0_k,\mathbf{x}) \geq \phi(0_i,1_k,\mathbf{x})$ holds for all state vectors **x,** with strict inequality occurring at a fixed **x**, which in turn occurs if and only if $I_{\phi}^{B}(i,(\alpha_k,\mathbf{p})) - I_{\phi}^{B}(k,(\alpha_i,\mathbf{p})) > 0$. Hence, by Definition 3.11.1, our conclusion follows.

3.12 Meng's Criticality Importance

In his next paper, Meng [23] also observed that Birnbaum's as well as Vesely-Fussell structural importance can be expressed in terms of the cardinality of certain definable sets of state vectors of a system. The definitions of these sets involve the minimal path and cut sets of the system. Before we do this, we note a preliminary result.

Theorem 3.12.1:

Let **x** be a critical state vector in terms of component c_i i.e. $\phi(1_i,\mathbf{x}) > \phi(0_i,\mathbf{x})$, then there exists a minimal path set ${}^{\phi}PS_j^m$ and minimal cut set ${}^{\phi}CS_j^m$ such that

i. ${}^{\phi}PS_j^m \cap {}^{\phi}CS_j^m = \{i\}$

ii. the state vector **x** has $x_l = 1$ for $l \in {}^{\phi}PS_j^m \setminus \{i\}$ and $x_l = 0$ for $l \in {}^{\phi}CS_j^m \setminus \{i\}$

Proof:

Define the state vector **x** with mutually exclusive sets $A, B \subseteq I$ such that $\phi(1_i, \mathbf{1}^A, \mathbf{0}^B) = 1$ and $\phi(0_i, \mathbf{1}^A, \mathbf{0}^B) = 0$. The set A and B can be decomposed into the sets A_1 and A_2 as well as B_1 and B_2 respectively such that $\phi(1_i, \mathbf{1}^{A_1}, \mathbf{0}^{A_2}, \mathbf{0}^B) = 1$ and $\phi(0_i, \mathbf{1}^A, \mathbf{1}^{B_1}, \mathbf{0}^{B_2}) = 0$. Hence, $A_1 \cup \{i\}$ and $B_2 \cup \{i\}$ form a minimal path and minimal cut set respectively. Our results follow immediately.

Meng now defined the following sets:

i. Let ${}^{\phi}W(i)$ denote the set of all state vectors **x** that exclude the state of component c_i i.e. ${}^{\phi}W(i) = \{(\cdot_i, \mathbf{x}) : x_j \in \{0,1\}, j \in I \setminus \{i\}\}$.

ii. Let ${}^{\phi}B(i)$ denote the set of state vectors **x**, excluding the state of component c_i, such that **x** is a critical state vector in terms of component c_i i.e. ${}^{\phi}B(i) = \{(\cdot_i, \mathbf{x}) : \phi(1_i, \mathbf{x}) > \phi(0_i, \mathbf{x})\}$. It follows that $B(i) \subseteq W(i)$.

iii. Let $I_0(\mathbf{x})$ denote the set of failed components within state vector **x** i.e. $I_0(\mathbf{x}) = \{j : x_j = 0 \text{ and } \mathbf{x} = (x_1, x_2, \ldots, x_{n-1}, x_n)\}$.

iv. Let $I_1(\mathbf{x})$ denote the set of functioning components within state vector **x** i.e. $I_1(\mathbf{x}) = \{j : x_j = 1 \text{ and } \mathbf{x} = (x_1, x_2, \ldots, x_{n-1}, x_n)\}$.

v. Let ${}^{\phi}E_1(i)$ denote the set of state vectors $(\cdot_i, \mathbf{x})$ such that the components, excluding c_i, of at least one minimal cut set ${}^{\phi}CS_j^m(i)$ (containing c_i) are failed i.e.
${}^{\phi}E_1(i) = \{(\cdot_i, \mathbf{x}) : \exists\, j \in \{1,2,\ldots,{}^{\phi}v(i)-1, {}^{\phi}v(i)\}$ such that ${}^{\phi}CS_j^m(i) \subseteq I_0((0_i, \mathbf{x}))\}$
.

vi. Let ${}^{\phi}V_1(i)$ denote the set of non-critical, in terms c_i, state vectors $(\cdot_i, \mathbf{x})$ such that the components, excluding c_i, of at least one minimal cut set ${}^{\phi}CS_j^m(i)$ (containing c_i) are failed i.e. ${}^{\phi}V_1(i) = {}^{\phi}E_1(i) \setminus {}^{\phi}B(i)$ and
${}^{\phi}V_1(i) = \{(\cdot_i, \mathbf{x}) : \phi(1_i, \mathbf{x}) = 0\,;\, \exists\, j \in \{1,2,\ldots,{}^{\phi}v(i)-1, {}^{\phi}v(i)\}$ with ${}^{\phi}CS_j^m(i) \subseteq I_0((0_i, \mathbf{x}))\}$

vii. Let ${}^{\phi}E_2(i)$ denote the set of state vectors $(\cdot_i, \mathbf{x})$ such that the components, excluding c_i, of at least one minimal path set ${}^{\phi}PS_j^m(i)$ (containing c_i) are functioning i.e.

${}^{\phi}E_2(i) = \left\{(\cdot_i, \mathbf{x}) : \exists\, j \in \left\{1,2,\ldots,{}^{\phi}u(i)-1,{}^{\phi}u(i)\right\} \text{ such that } {}^{\phi}PS_j^m(i) \subseteq I_1\left((1_i, \mathbf{x})\right)\right\}$.

viii. Let ${}^{\phi}V_2(i)$ denote the set of non-critical, in terms c_i, state vectors $(\cdot_i, \mathbf{x})$ such that the components, excluding c_i, of at least one minimal path set ${}^{\phi}PS_j^m(i)$ (containing c_i) are functioning i.e. ${}^{\phi}V_2(i) = {}^{\phi}E_2(i) \setminus {}^{\phi}B(i)$ and

${}^{\phi}V_2(i) = \left\{(\cdot_i, \mathbf{x}) : \phi(0_i, \mathbf{x}) = 1\,;\, \exists\, j \in \left\{1,2,\ldots,{}^{\phi}u(i)-1,{}^{\phi}u(i)\right\} \text{ with } {}^{\phi}PS_j^m(i) \subseteq I_1\left((1_i, \mathbf{x})\right)\right\}$

ix. Let ${}^{\phi}N_1(i)$ denote the set of non-critical state vectors $(\cdot_i, \mathbf{x})$ such that the failed components of $(\cdot_i, \mathbf{x})$ do not form any minimal cut set ${}^{\phi}CS_j^m(i)$ (containing c_i) and the system is failed when c_i is functioning i.e.

${}^{\phi}N_1(i) = \left\{(\cdot_i, \mathbf{x}) :\ \phi(1_i, \mathbf{x}) = 0\,;\ {}^{\phi}CS_j^m(i) \not\subseteq I_0\left((0_i, \mathbf{x})\right)\ \forall\ j \in \left\{1,2,\ldots,{}^{\phi}v(i)-1,{}^{\phi}v(i)\right\}\right\}$

x. Let ${}^{\phi}N_2(i)$ denote the set of non-critical state vectors $(\cdot_i, \mathbf{x})$ such that the functioning components of $(\cdot_i, \mathbf{x})$ do not form any minimal path set ${}^{\phi}PS_j^m(i)$ (containing c_i) and the system is functioning when c_i is failed i.e.

${}^{\phi}N_2(i) = \left\{(\cdot_i, \mathbf{x}) :\ \phi(0_i, \mathbf{x}) = 1\,;\ {}^{\phi}PS_j^m(i) \not\subseteq I_1\left((1_i, \mathbf{x})\right)\ \forall\ j \in \left\{1,2,\ldots,{}^{\phi}u(i)-1,{}^{\phi}u(i)\right\}\right\}$

With these new found sets, Meng observed:

i. If $(\cdot_i, \mathbf{x}) \in {}^{\phi}E_1(i)$ then $\phi(0_i, \mathbf{x}) = 0$.

ii. If $(\cdot_i, \mathbf{x}) \in {}^{\phi}E_2(i)$ then $\phi(1_i, \mathbf{x}) = 1$.

iii. As ${}^{\phi}B(i)$ contains only critical state vectors, then, by Theorem 3.12.1, ${}^{\phi}B(i) = {}^{\phi}E_1(i) \cap {}^{\phi}E_2(i)$.

iv. By definition, the sets ${}^{\phi}B(i)$, ${}^{\phi}V_1(i)$, ${}^{\phi}V_2(i)$, ${}^{\phi}N_1(i)$ and ${}^{\phi}N_2(i)$ are mutually exclusive with ${}^{\phi}W(i) = {}^{\phi}B(i) \cup {}^{\phi}V_1(i) \cup {}^{\phi}V_2(i) \cup {}^{\phi}N_1(i) \cup {}^{\phi}N_2(i)$.

v. ${}^{\phi}V_1(i)$ (${}^{\phi}V_2(i)$) contain non-critical vectors of c_i but with failed (functioning) components, excluding c_i, that form at least one minimal cut (path) set ${}^{\phi}CS_j^m(i)$ (${}^{\phi}PS_j^m(i)$). Thus, the repair (failure) of certain failed (functioning) components may lead to $(\cdot_i, \mathbf{x}) \in {}^{\phi}V_1(i)$ ($(\cdot_i, \mathbf{x}) \in {}^{\phi}V_2(i)$) becoming a critical vector of c_i.

vi. ${}^{\phi}N_1(i)$ and ${}^{\phi}N_2(i)$ represent completely non-essential vectors of component c_i. For $(\cdot_i, \mathbf{x}) \in {}^{\phi}N_1(i)$, we have that $\phi(1_i, \mathbf{x}) = \phi(0_i, \mathbf{x}) = 0$ and, with respect to $(0_i, \mathbf{x})$, there exists no minimal cut set containing c_i such that all the minimal cut set components are failed. Thus the repair of component c_i is irrelevant in terms of returning the system to an operational state. For $(\cdot_i, \mathbf{x}) \in {}^{\phi}N_2(i)$, we have that $\phi(1_i, \mathbf{x}) = \phi(0_i, \mathbf{x}) = 1$ and, similarly under $(1_i, \mathbf{x})$, there exists no minimal path set containing c_i such that all the minimal path set components are functioning. Again, the failure of component c_i is irrelevant as it will not place the system in a failed state.

With these newly defined sets, we can revisit the definition of Birnbaum and Vesely-Fussell importance measures.

Theorem 3.12.2: *Alternative Definition of Birnbaum's Importance*
For component c_i under structure function ϕ and vector of component availabilities **p**, we have

$$I_{\phi}^{B}(i) = \left| {}^{\phi}B(i) \right| \Big/ \left| {}^{\phi}W(i) \right| \qquad (3.12.1)$$

$$I_{\phi}^{B}(i, \mathbf{p}) = \Pr\left[(\cdot_i, \mathbf{x}) \in {}^{\phi}B(i)\right] \qquad (3.12.2)$$

Proof:

From (3.1.1) and (2.1.4), we have $I_\phi^B(i) = 2^{-n}\sum_{all\ \mathbf{x}}\{\phi(1_i,\mathbf{x}) - \phi(0_i,\mathbf{x})\}$ which can be rewritten as $I_\phi^B(i) = 2^{-(n-1)}\sum_{all\{\mathbf{x}:x_i=1\}}\{\phi(1_i,\mathbf{x}) - \phi(0_i,\mathbf{x})\}$. Now, each term $\phi(1_i,\mathbf{x}) - \phi(0_i,\mathbf{x})$ gives a contribution of one each time that x is a critical state vector in terms of component c_i. Thus, $\sum_{all\{\mathbf{x}:x_i=1\}}\{\phi(1_i,\mathbf{x}) - \phi(0_i,\mathbf{x})\} = |{}^\phi B(i)|$ and since $|{}^\phi W(i)| = 2^{(n-1)}$ we have $I_\phi^B(i) = |{}^\phi B(i)| \,/\, |{}^\phi W(i)|$. From (3.1.5) and (2.1.5) we have $I_\phi^B(i,\mathbf{p}) = h_\phi(1_i,\mathbf{p}) - h_\phi(0_i,\mathbf{p}) = \Pr[\phi(1_i,\mathbf{x}) = 1|\mathbf{p}] - \Pr[\phi(0_i,\mathbf{x}) = 1|\mathbf{p}]$. As ϕ is a monotone function i.e. we have $\{(\cdot_i,\mathbf{x}):\phi(0_i,\mathbf{x}) = 1\} \subseteq \{(\cdot_i,\mathbf{x}):\phi(1_i,\mathbf{x}) = 1\}$.

Hence

$$I_\phi^B(i,\mathbf{p}) = \Pr[\phi(1_i,\mathbf{x}) = 1 \cap \phi(0_i,\mathbf{x}) = 0|\mathbf{p}] = \Pr[\phi(1_i,\mathbf{x}) > \phi(0_i,\mathbf{x})|\mathbf{p}] = \Pr[(\cdot_i,\mathbf{x}) \in {}^\phi B(i)]$$

Theorem 3.12.3: *Alternative Definition of Vesely-Fussell Importance*

For component c_i within a system with structure function ϕ under vector of component availabilities **p**, we have

$$I_\phi^{V-F}(i) = \frac{|{}^\phi B(i)| + |{}^\phi V_1(i)|}{|\{\mathbf{x}:\phi(\mathbf{x}) = 0\}|} \tag{3.12.3}$$

$$I_\phi^{V-F}(i,\mathbf{p}) = \frac{q_i\left(\Pr[{}^\phi B(i)|\mathbf{p}] + \Pr[{}^\phi V_1(i)|\mathbf{p}]\right)}{\Pr[\{\mathbf{x}:\phi(\mathbf{x}) = 0\}|\mathbf{p}]} \tag{3.12.4}$$

where $\Pr[\{\mathbf{x}:\phi(\mathbf{x}) = 0\}|\mathbf{p}] = \Pr[{}^\phi V_1(i)|\mathbf{p}] + \Pr[{}^\phi N_1(i)|\mathbf{p}] + q_i \Pr[{}^\phi B(i)|\mathbf{p}]$

Proof:

Converting (3.2.1) into our new defined set notation and by noting that all component are independent of each other, we have

$$I_\phi^{V-F}(i,\mathbf{p}) = \frac{\Pr[{}^\phi E_1(i) \cap \{x_i = 0\}|\mathbf{p}]}{\Pr[\{\mathbf{x}:\phi(\mathbf{x}) = 0\}|\mathbf{p}]} = \frac{q_i \Pr[{}^\phi E_1(i)|\mathbf{p}]}{\Pr[\{\mathbf{x}:\phi(\mathbf{x}) = 0\}|\mathbf{p}]}$$
$$= \frac{q_i\left(\Pr[{}^\phi B(i)|\mathbf{p}] + \Pr[{}^\phi V_1(i)|\mathbf{p}]\right)}{\Pr[\{\mathbf{x}:\phi(\mathbf{x}) = 0\}|\mathbf{p}]}$$

Now $\Pr\left[\{\mathbf{x}:\phi(\mathbf{x})=0\}\middle|\mathbf{p}\right]$ occurs only for those state vectors $(\cdot_i,\mathbf{x})$ belonging to ${}^{\phi}V_1(i)$ and ${}^{\phi}N_1(i)$ as well as the state vectors $(0_i,\mathbf{x})\in{}^{\phi}B(i)$. Hence, as these sets are disjoint, $\Pr\left[\{\mathbf{x}:\phi(\mathbf{x})=0\}\middle|\mathbf{p}\right]=\Pr\left[{}^{\phi}V_1(i)\middle|\mathbf{p}\right]+\Pr\left[{}^{\phi}N_1(i)\middle|\mathbf{p}\right]+q_i\Pr\left[{}^{\phi}B(i)\middle|\mathbf{p}\right]$. For Vesely-Fussell structural importance, each state vector becomes equally likely to occur and so we only need to replace the probability of each set in the above expression for $I_{\phi}^{V-F}(i,\mathbf{p})$ by the cardinality of the respective set.

For our audio playback system, we can tabulate each state vector contained in ${}^{\phi}W(i)$ for components c_2 and c_3 and decompose them into their various mutually exclusive subgroups. The term "yes" represents that the state vector belongs to the subgroup.

${}^{\phi}W(2)$	${}^{\phi}B(2)$	${}^{\phi}E_1(2)$	${}^{\phi}V_1(2)$	${}^{\phi}E_2(2)$	${}^{\phi}V_2(2)$	${}^{\phi}N_1(2)$	${}^{\phi}N_2(2)$
$(0,\cdot,0,0)$		Yes	Yes				
$(0,\cdot,0,1)$		Yes	Yes				
$(0,\cdot,1,0)$		Yes	Yes				
$(1,\cdot,0,0)$		Yes	Yes				
$(0,\cdot,1,1)$		Yes	Yes				
$(1,\cdot,0,1)$	Yes	Yes		Yes			
$(1,\cdot,1,0)$	Yes	Yes		Yes			
$(1,\cdot,1,1)$	Yes	Yes		Yes			

Table 3.12.1: *Decomposition of ${}^{\phi}W(2)$ into its subgroups for the audio playback system*

It follows that $I_{\phi}^{B}(2)=\frac{3}{8}$, $I_{\phi}^{B}(2,\mathbf{p})=p_1q_3p_4+p_1p_3q_4+p_1p_3p_4=p_1(1-q_3q_4)$, $I_{\phi}^{V-FC}(2)=\frac{8}{13}$ and $I_{\phi}^{V-FC}(2,\mathbf{p})=q_2/\left(1-p_1p_2(1-q_3q_4)\right)$ from (3.12.1), (3.12.2), (3.12.3) and (3.12.4).

For component c_3:

${}^{\phi}W(3)$	${}^{\phi}B(3)$	${}^{\phi}E_1(3)$	${}^{\phi}V_1(3)$	${}^{\phi}E_2(3)$	${}^{\phi}V_2(3)$	${}^{\phi}N_1(3)$	${}^{\phi}N_2(3)$
$(0,0,\cdot,0)$		Yes	Yes				
$(0,0,\cdot,1)$						Yes	
$(0,1,\cdot,0)$		Yes	Yes				
$(1,0,\cdot,0)$		Yes	Yes				
$(0,1,\cdot,1)$						Yes	
$(1,0,\cdot,1)$						Yes	
$(1,1,\cdot,0)$	Yes	Yes		Yes			
$(1,1,\cdot,1)$				Yes	Yes		

Table 3.12.2: *Decomposition of ${}^{\phi}W(3)$ into its subgroups for the audio playback system*

We have that $I_{\phi}^{B}(3)=\frac{1}{8}$, $I_{\phi}^{B}(2,\mathbf{p})=p_1p_3q_4$, $I_{\phi}^{V-FC}(3)=\frac{4}{13}$ and $I_{\phi}^{V-FC}(3,\mathbf{p})=q_3q_4/\left(1-p_1p_2(1-q_3q_4)\right)$.

Using this alternative definition for Vesely-Fussell component importance, Meng established Corollary 3.12.4 and Corollary 3.12.5.

Corollary 3.12.4:

$I_{\phi}^{V-F}(i,\mathbf{p})$ is decreasing in terms of p_i.

Proof:

By the quotient rule of differentiation

$$\partial I_{\phi}^{V-F}(i,\mathbf{p})/\partial p_i = A/\left(\Pr\left[\{\mathbf{x}:\phi(\mathbf{x})=0\}\,|\,\mathbf{p}\right]\right)^2$$

where

$$A = \Pr\left[\left\{\mathbf{x}:\phi(\mathbf{x})=0\right\}|\mathbf{p}\right] \times \partial\left[q_i\left(\Pr\left[{}^{\phi}B(i)|\mathbf{p}\right]+\Pr\left[{}^{\phi}V_1(i)|\mathbf{p}\right]\right)\right]/\partial p_i$$
$$-q_i\left(\Pr\left[{}^{\phi}B(i)|\mathbf{p}\right]+\Pr\left[{}^{\phi}V_1(i)|\mathbf{p}\right]\right) \times \partial \Pr\left[\left\{\mathbf{x}:\phi(\mathbf{x})=0\right\}|\mathbf{p}\right]/\partial p_i$$

By the independence of components and pivot decomposition of structure function ϕ,

$$\Pr\left[\left\{\mathbf{x}:\phi(\mathbf{x})=0\right\}|\mathbf{p}\right] = p_i \Pr\left[\left\{\mathbf{x}:\phi(1_i,\mathbf{x})=0\right\}|\mathbf{p}\right] + q_i \Pr\left[\left\{\mathbf{x}:\phi(0_i,\mathbf{x})=0\right\}|\mathbf{p}\right]$$

Since ${}^{\phi}B(i)$ and ${}^{\phi}V_1(i)$ does not depend on c_i, we have

$$A = -\left(p_i \Pr\left[\phi(1_i,\mathbf{x})=0|\mathbf{p}\right]+q_i \Pr\left[\phi(0_i,\mathbf{x})=0|\mathbf{p}\right]\right)\left(\Pr\left[{}^{\phi}B(i)|\mathbf{p}\right]+\Pr\left[{}^{\phi}V_1(i)|\mathbf{p}\right]\right)$$
$$-q_i\left(\Pr\left[\phi(1_i,\mathbf{x})=0|\mathbf{p}\right]-\Pr\left[\phi(0_i,\mathbf{x})=0|\mathbf{p}\right]\right)\left(\Pr\left[{}^{\phi}B(i)|\mathbf{p}\right]+\Pr\left[{}^{\phi}V_1(i)|\mathbf{p}\right]\right)$$
$$= -\Pr\left[\phi(1_i,\mathbf{x})=0|\mathbf{p}\right]\left(\Pr\left[{}^{\phi}B(i)|\mathbf{p}\right]+\Pr\left[{}^{\phi}V_1(i)|\mathbf{p}\right]\right) > 0$$

Hence $\partial I_{\phi}^{V-F}(i,\mathbf{p})/\partial p_i < 0$ and our result follows.

Corollary 3.12.5:

If component c_i is in parallel with the rest of the system, then $I_{\phi}^{V-F}(i,\mathbf{p}) = 1$ irrespective of $\mathbf{p}$.

Proof:

As c_i is in parallel with the rest of the system, it follows that ${}^{\phi}V_1(i)$ and ${}^{\phi}N_1(i)$ are empty sets and our conclusion follows from (3.12.4).

Meng noted that Vesely-Fussell importance only takes into account a component's contribution to the failure of a system. Meng thus motivates the establishment of an analogous importance measure.

Definition 3.12.6: *Meng's Criticality Importance*

Meng's criticality reliability importance for component c_i within a system with structure function ϕ under vector of component availabilities $\mathbf{p}$ is defined as:

$$I_{\phi}^{MC}(i,\mathbf{p}) = \frac{p_i\left(\Pr\left[{}^{\phi}B(i)|\mathbf{p}\right]+\Pr\left[{}^{\phi}V_2(i)|\mathbf{p}\right]\right)}{\Pr\left[\left\{\mathbf{x}:\phi(\mathbf{x})=1\right\}|\mathbf{p}\right]} \qquad (3.12.5)$$

where $\Pr\left[\{\mathbf{x}:\phi(\mathbf{x})=0\}\,|\,\mathbf{p}\right]=\Pr\left[{}^{\phi}V_2(i)\,|\,\mathbf{p}\right]+\Pr\left[{}^{\phi}N_2(i)\,|\,\mathbf{p}\right]+p_i\Pr\left[{}^{\phi}B(i)\,|\,\mathbf{p}\right]$

Meng's criticality structural importance then takes on the form:

$$I_{\phi}^{MC}(i)=\frac{\left|{}^{\phi}B(i)\right|+\left|{}^{\phi}V_2(i)\right|}{\left|\{\mathbf{x}:\phi(\mathbf{x})=1\}\right|} \qquad (3.12.6)$$

For our audio playback system, we have that $I_{\phi}^{MC}(2)=1$, $I_{\phi}^{MC}(3)=\frac{2}{3}$, $I_{\phi}^{MC}(2,\mathbf{p})=1$ and $I_{\phi}^{MC}(3,\mathbf{p})=p_3/(1-q_3q_4)$.

The result that both $I_{\phi}^{MC}(2)=1$ and $I_{\phi}^{MC}(2,\mathbf{p})=1$ leads us to speculate the existence of Corollary 3.12.7.

Corollary 3.12.7:

If component c_i is in series with the rest of the system under structure function ϕ, then $I_{\phi}^{MC}(i,\mathbf{p})=1$, irrespective of the vector of component availabilities $\mathbf{p}$.

Proof:

As c_i is in series with the rest of the system, we have that ${}^{\phi}V_2(i)$ and ${}^{\phi}N_2(i)$ are empty sets. Our result then follows from (3.12.5).

Furthermore, Meng went on to compare his new measure, as well as Vesely-Fussell importance, against Boland *el al* Criticality of Nodes.

Lemma 3.12.8:

For $c_i >_{\phi}^{cn} c_k$, we have

i. If $(0_i,\cdot_k,\mathbf{x})\in{}^{\phi}B(k)$ then $(\cdot_i,0_k,\mathbf{x})\in{}^{\phi}B(i)$

ii. If $(1_i,\cdot_k,\mathbf{x})\in{}^{\phi}B(k)$ then $(\cdot_i,1_k,\mathbf{x})\in{}^{\phi}B(i)$

iii. If $(1_i,\cdot_k,\mathbf{x})\in{}^{\phi}V_1(k)$ then $(\cdot_i,1_k,\mathbf{x})\in{}^{\phi}V_1(i)$

iv. If $(0_i,\cdot_k,\mathbf{x})\in{}^{\phi}V_1(k)$ then $(\cdot_i,0_k,\mathbf{x})\in{}^{\phi}B(i)\cup{}^{\phi}V_1(i)$

Proof:

For $(0_i,\cdot_k,\mathbf{x}) \in {}^{\phi}B(k)$, we have $\phi(0_i,1_k,\mathbf{x}) > \phi(0_i,0_k,\mathbf{x})$ and since $c_i >_{\phi}^{cn} c_k$, $\phi(1_i,0_k,\mathbf{x}) \geq \phi(0_i,1_k,\mathbf{x})$ holds. Hence $\phi(1_i,0_k,\mathbf{x}) > \phi(0_i,0_k,\mathbf{x})$ and $(\cdot_i,0_k,\mathbf{x}) \in {}^{\phi}B(i)$.

For $(1_i,\cdot_k,\mathbf{x}) \in {}^{\phi}B(k)$ and $c_i >_{\phi}^{cn} c_k$, we obtain $\phi(1_i,1_k,\mathbf{x}) > \phi(1_i,0_k,\mathbf{x}) \geq \phi(0_i,1_k,\mathbf{x})$ and thus $(\cdot_i,1_k,\mathbf{x}) \in {}^{\phi}B(i)$.

Let $(1_i,\cdot_k,\mathbf{x}) \in {}^{\phi}V_1(k)$ for fixed $\mathbf{x}$. Now $\phi(1_i,1_k,\mathbf{x}) = \phi(1_i,0_k,\mathbf{x}) = 0$ and therefore there exists ${}^{\phi}CS_j^m(k \setminus i) \subseteq I_0((1_i,0_k,\mathbf{x}))$. As $c_i >_{\phi}^{cn} c_k$, either condition (ii) or (iii) of Theorem 3.10.9 holds and there exists ${}^{\phi}CS_j^m(i \setminus k) \in {}^{\phi}B_{c_i \setminus c_k}^m$ such that ${}^{\phi}CS_j^m(i \setminus k) \setminus \{i\} \subseteq {}^{\phi}CS_j^m(k \setminus i) \setminus \{k\}$ with $\phi(0_i,1_k,\mathbf{0}^{{}^{\phi}CS_j^m(k \setminus i) \setminus \{k\}},\mathbf{p}) = 0$ and $\phi(1_i,1_k,\mathbf{0}^{{}^{\phi}CS_j^m(k \setminus i) \setminus \{k\}},\mathbf{p}) = 1$. This implies that there is another minimal cut set ${}^{\phi}CS_l^m(i) \in {}^{\phi}B_{c_i}^m$ such that ${}^{\phi}CS_l^m(i) \subseteq {}^{\phi}CS_l^m(k \setminus i) \cup \{i\} \setminus \{k\} \subseteq I_0(0_i,1_k,\mathbf{x})$. This coupled with $\phi(1_i,1_k,\mathbf{x}) = 0$ yields $(\cdot_i,1_k,\mathbf{x}) \in {}^{\phi}V_1(i)$.

Let $(0_i,\cdot_k,\mathbf{x}) \in {}^{\phi}V_1(k)$ for fixed $\mathbf{x}$ then $\phi(0_i,1_k,\mathbf{x}) = \phi(0_i,0_k,\mathbf{x}) = 0$ and hence there exists ${}^{\phi}CS_j^m(k) \subseteq I_0((0_i,0_k,\mathbf{x}))$. As $c_i >_{\phi}^{cn} c_k$ we have either $\phi(1_i,0_k,\mathbf{x}) = 1$ or $\phi(1_i,0_k,\mathbf{x}) = 0$. If $\phi(1_i,0_k,\mathbf{x}) = 1$ then $(\cdot_i,0_k,\mathbf{x})$ is a critical vector for c_i and $(\cdot_i,0_k,\mathbf{x}) \in {}^{\phi}B(i)$. If $\phi(1_i,0_k,\mathbf{x}) = 0$ then either condition (i), (ii) or (iii) of Theorem 3.10.9 holds. If (i) holds, then $i \in {}^{\phi}CS_j^m(k)$ and $(\cdot_i,0_k,\mathbf{x}) \in {}^{\phi}V_1(i)$. If (ii) or (iii) holds, then arguing as before there exists another minimal cut set ${}^{\phi}CS_l^m(i) \in {}^{\phi}B_{c_i}^m$ such that ${}^{\phi}CS_l^m(i) \subseteq {}^{\phi}CS_l^m(k \setminus i) \cup \{i\} \setminus \{k\} \subseteq I_0(0_i,0_k,\mathbf{x})$ and therefore, $(\cdot_i,0_k,\mathbf{x}) \in {}^{\phi}V_1(i)$.

Theorem 3.12.9: *Criticality of Nodes versus Vesely-Fussell Importance*

If $c_i >_{\phi}^{cn} c_k$ then $I_{\phi}^{V-F}(i,\mathbf{p}) > I_{\phi}^{V-F}(k,\mathbf{p})$ for all $\mathbf{0} < \mathbf{p} < \mathbf{1}$ satisfying $p_i \leq p_k$

Proof:

By the pivot decomposition of c_i in (3.12.4),

$$I_\phi^{V-F}(k,\mathbf{p}) = \frac{q_k\left(p_i \Pr\left[(1_i,\cdot_k,x) \in {}^\phi B(k) \cup {}^\phi V_1(k) \middle| \mathbf{p}\right] + q_i \Pr\left[(0_i,\cdot_k,x) \in {}^\phi B(k) \cup {}^\phi V_1(k) \middle| \mathbf{p}\right]\right)}{\Pr\left[\left\{\mathbf{x}:\phi(\mathbf{x})=0\right\} \middle| \mathbf{p}\right]}$$

and letting $\mathbf{0} < \mathbf{p} < \mathbf{1}$ with $p_i \le p_k$, we have

$$I_\phi^{V-F}(k,\mathbf{p}) \le \frac{q_i p_k \Pr\left[(1_i,\cdot_k,x) \in {}^\phi B(k) \cup {}^\phi V_1(k) \middle| \mathbf{p}\right] + q_i q_k \Pr\left[(0_i,\cdot_k,x) \in {}^\phi B(k) \cup {}^\phi V_1(k) \middle| \mathbf{p}\right]}{\Pr\left[\left\{\mathbf{x}:\phi(\mathbf{x})=0\right\} \middle| \mathbf{p}\right]}$$

From Lemma 3.12.8, we have that

$\left\{\mathbf{x}:(0_i,\cdot_k,\mathbf{x}) \in {}^\phi B(k) \cup {}^\phi V_1(k)\right\} \subseteq \left\{\mathbf{x}:(\cdot_i,0_k,\mathbf{x}) \in {}^\phi B(i) \cup {}^\phi V_1(i)\right\}$ and

$\left\{\mathbf{x}:(1_i,\cdot_k,\mathbf{x}) \in {}^\phi B(k) \cup {}^\phi V_1(k)\right\} \subseteq \left\{\mathbf{x}:(\cdot_i,1_k,\mathbf{x}) \in {}^\phi B(i) \cup {}^\phi V_1(i)\right\}$. Hence

$\Pr\left[\left\{\mathbf{x}:(0_i,\cdot_k,\mathbf{x}) \in {}^\phi B(k) \cup {}^\phi V_1(k)\right\}\right] \le \Pr\left[\left\{\mathbf{x}:(\cdot_i,0_k,\mathbf{x}) \in {}^\phi B(i) \cup {}^\phi V_1(i)\right\}\right]$ and

$\Pr\left[\left\{\mathbf{x}:(1_i,\cdot_k,\mathbf{x}) \in {}^\phi B(k) \cup {}^\phi V_1(k)\right\}\right] \le \Pr\left[\left\{\mathbf{x}:(\cdot_i,1_k,\mathbf{x}) \in {}^\phi B(i) \cup {}^\phi V_1(i)\right\}\right]$. Therefore

$$I_\phi^{V-F}(k,\mathbf{p}) \le \frac{q_i\left(p_k \Pr\left[(\cdot_i,1_k,x) \in {}^\phi B(i) \cup {}^\phi V_1(i) \middle| \mathbf{p}\right] + q_k \Pr\left[(\cdot_i,0_k,x) \in {}^\phi B(i) \cup {}^\phi V_1(i) \middle| \mathbf{p}\right]\right)}{\Pr\left[\left\{\mathbf{x}:\phi(\mathbf{x})=0\right\} \middle| \mathbf{p}\right]}$$

Thus $I_\phi^{V-F}(k,\mathbf{p}) \le I_\phi^{V-F}(i,\mathbf{p})$. As $c_i >_\phi^{cn} c_k$ we have, from Theorem 3.10.9, that there exists a minimal cut set ${}^\phi CS_j^m(i \setminus k) \in {}^\phi B^m_{c_i \setminus c_k}$ such that ${}^\phi CS_j^m(i \setminus k) \cup \{k\} \setminus \{i\}$ is not a cut set and so $\phi\left(1_i,0_k,\mathbf{0}^{{}^\phi CS_j^m(i\setminus k)\setminus\{i\}},\mathbf{1}\right) = \phi\left(1_i,1_k,\mathbf{0}^{{}^\phi CS_j^m(i\setminus k)\setminus\{i\}},\mathbf{1}\right) = 1$. Thus $\left(1_i,\cdot_k,\mathbf{0}^{{}^\phi CS_j^m(i\setminus k)\setminus\{i\}},\mathbf{1}\right) \notin {}^\phi B(k) \cup {}^\phi V_1(k)$. Clearly, as ${}^\phi CS_j^m(i \setminus k)$ is a minimal cut set, we have $\left(\cdot_i,1_k,\mathbf{0}^{{}^\phi CS_j^m(i\setminus k)\setminus\{i\}},\mathbf{1}\right) \in {}^\phi B(i) \cup {}^\phi V_1(i)$. It follows that

$\left\{\mathbf{x}:(\cdot_k,\mathbf{x}) \in {}^\phi B(k) \cup {}^\phi V_1(k)\right\} \subset \left\{\mathbf{x}:(\cdot_i,\mathbf{x}) \in {}^\phi B(i) \cup {}^\phi V_1(i)\right\}$ and subsequently $I_\phi^{V-F}(k,\mathbf{p}) < I_\phi^{V-F}(i,\mathbf{p})$.

Corollary 3.12.10:

If $c_i >_\phi^{cn} c_k$ then $I_\phi^{V-F}(i) > I_\phi^{V-F}(k)$

Proof:

From (3.2.3) and Theorem 3.12.9, the result follows directly.

Corollary 3.12.11:

If component c_i is in series with the rest of the system, then we have that $I_\phi^{V-F}(i,\mathbf{p}) \geq I_\phi^{V-F}(k,\mathbf{p})$ for all $0<\mathbf{p}<1$ satisfying $p_i \leq p_k$. Strict inequality holds for some fixed $\mathbf{p}$ satisfying $p_i \leq p_k$ unless component c_k is also in series with the rest of the system i.e. c_k forms a single component cut set.

Proof:

From the proof of Theorem 3.12.9 we already have $I_\phi^{V-F}(i,\mathbf{p}) \geq I_\phi^{V-F}(k,\mathbf{p})$ for all $0<\mathbf{p}<1$ satisfying $p_i \leq p_k$. As c_i is in series with the rest of the system, we have the minimal cut set ${}^{\phi}CS_j^m(i \setminus k) = \{i\}$ such that ${}^{\phi}CS_j^m(i \setminus k) \cup \{k\} \setminus \{i\} = \{k\}$ may or may not be a cut set. If $\{k\}$ is not a cut set, then, by the proof of Theorem 3.12.9, $I_\phi^{V-F}(i,\mathbf{p}) > I_\phi^{V-F}(k,\mathbf{p})$ holds. If $\{k\}$ is a cut set then c_k is also in series with the rest of the system.

Theorem 3.12.12:

Let $c_i =_\phi^{cn} c_k$ and $\mathbf{0}<\mathbf{p}<\mathbf{1}$. Then either,

i. $I_\phi^{V-F}(i,\mathbf{p}) = I_\phi^{V-F}(k,\mathbf{p})$ for all $\mathbf{p}$ or

ii. $I_\phi^{V-F}(i,\mathbf{p}) > I_\phi^{V-F}(k,\mathbf{p})$ if and only if $p_i < p_k$

Proof:

From the proof of Theorem 3.12.9 we have

$$I_\phi^{V-F}(k,\mathbf{p}) = \frac{q_k\left(p_i \Pr\left[(1_i,\cdot_k,x) \in {}^{\phi}B(k) \cup {}^{\phi}V_1(k) \middle| \mathbf{p}\right] + q_i \Pr\left[(0_i,\cdot_k,x) \in {}^{\phi}B(k) \cup {}^{\phi}V_1(k) \middle| \mathbf{p}\right]\right)}{\Pr\left[\{\mathbf{x}:\phi(\mathbf{x})=0\} \middle| \mathbf{p}\right]}$$

Let $c_i =_\phi^{cn} c_k$. Now either condition (i) or (ii) of Corollary 3.10.11 holds. If (i) holds then clearly $\{\mathbf{x}:(\cdot_k,\mathbf{x}) \in {}^{\phi}B(k) \cup {}^{\phi}V_1(k)\} = \{\mathbf{x}:(\cdot_i,\mathbf{x}) \in {}^{\phi}B(i) \cup {}^{\phi}V_1(i)\}$ and as

${}^{\phi}B^m_{c_k} = {}^{\phi}B^m_{c_i}$ we have $q_k \Pr\left[(\cdot_k,\mathbf{x}) \in {}^{\phi}B(k) \cup {}^{\phi}V_1(k) \middle| \mathbf{p}\right] = q_i \Pr\left[(\cdot_i,\mathbf{x}) \in {}^{\phi}B(i) \cup {}^{\phi}V_1(i) \middle| \mathbf{p}\right]$ giving $I_{\phi}^{V-F}(i,\mathbf{p}) = I_{\phi}^{V-F}(k,\mathbf{p})$.

If condition (ii) holds, analogously to Theorem 3.12.9, it follows that $\Pr\left[\left\{\mathbf{x}:(0_i,\cdot_k,\mathbf{x}) \in {}^{\phi}B(k) \cup {}^{\phi}V_1(k)\right\}\right] = \Pr\left[\left\{\mathbf{x}:(\cdot_i,0_k,\mathbf{x}) \in {}^{\phi}B(i) \cup {}^{\phi}V_1(i)\right\}\right]$ and $\Pr\left[\left\{\mathbf{x}:(1_i,\cdot_k,\mathbf{x}) \in {}^{\phi}B(k) \cup {}^{\phi}V_1(k)\right\}\right] = \Pr\left[\left\{\mathbf{x}:(\cdot_i,1_k,\mathbf{x}) \in {}^{\phi}B(i) \cup {}^{\phi}V_1(i)\right\}\right]$ yielding $I_{\phi}^{V-F}(i,\mathbf{p}) > I_{\phi}^{V-F}(k,\mathbf{p})$ if and only if $p_i < p_k$.

We can consider Meng's criticality importance under the dual structure function ϕ^D.

Lemma 3.12.13:

We have that

i. $(\cdot_i,\mathbf{x}) \in {}^{\phi}B(i)$ if and only if $(\cdot_i,\bar{\mathbf{x}}) \in {}^{\phi^D}B(i)$

ii. $(\cdot_i,\mathbf{x}) \in {}^{\phi}V_1(i)$ if and only if $(\cdot_i,\bar{\mathbf{x}}) \in {}^{\phi^D}V_2(i)$

iii. $(\cdot_i,\mathbf{x}) \in {}^{\phi}N_1(i)$ if and only if $(\cdot_i,\bar{\mathbf{x}}) \in {}^{\phi^D}N_1(i)$

Proof:

Now $(\cdot_i,\mathbf{x}) \in {}^{\phi}B(i)$ occurs if and only if $\phi(1_i,\mathbf{x}) > \phi(0_i,\mathbf{x})$ and, by (2.3.1), is the same as $\phi^D(1_i,\bar{\mathbf{x}}) > \phi^D(0_i,\bar{\mathbf{x}})$ i.e. $(\cdot_i,\bar{\mathbf{x}}) \in {}^{\phi^D}B(i)$.

For $(\cdot_i,\mathbf{x}) \in {}^{\phi}V_1(i)$ we have $\phi(1_i,\mathbf{x}) = 0$ i.e. $\phi^D(0_i,\bar{\mathbf{x}}) = 1$. Also, by Lemma 2.3.6, the minimal cut set ${}^{\phi}CS^m_j(i)$ is a minimal path set ${}^{\phi^D}PS^m_j(i)$ under the dual structure function and thus $(\cdot_i,\bar{\mathbf{x}}) \in {}^{\phi^D}V_2(i)$.

Let $(\cdot_i,\mathbf{x}) \in {}^{\phi}N_1(i)$. We have $\phi(1_i,\mathbf{x}) = 0$ with ${}^{\phi}CS^m_j(i) \not\subseteq I_0\left((0_i,\mathbf{x})\right)$ ${}^{\phi}CS^m_j(i)$ not being minimal cut set of ϕ. Again by Lemma 2.3.6, we have that $\phi^D(0_i,\bar{\mathbf{x}}) = 1$ with a minimal path set ${}^{\phi^D}PS^m_j(i) \not\subseteq I_1\left((1_i,\bar{\mathbf{x}})\right)$. Therefore $(\cdot_i,\bar{\mathbf{x}}) \in {}^{\phi^D}N_1(i)$.

Theorem 3.12.14: *Meng's Criticality Importance under the Dual System*

i. $$I_{\phi^D}^{MC}(i,\overline{\mathbf{p}}) = I_{\phi}^{V-FC}(i,\mathbf{p}) \tag{3.12.7}$$

ii. $$I_{\phi^D}^{MC}(i) = I_{\phi}^{V-FC}(i) \tag{3.12.8}$$

Proof:

From (3.12.5) we have $I_{\phi^D}^{MC}(i,\mathbf{p}) = \dfrac{\overline{p}_i\left(\Pr\left[{}^{\phi^D}B(i)|\mathbf{p}\right] + \Pr\left[{}^{\phi^D}V_2(i)|\mathbf{p}\right]\right)}{\Pr\left[\left\{\mathbf{x}:\phi^D(\mathbf{x})=1\right\}|\mathbf{p}\right]}$

From Lemma 3.12.13 and (2.3.3) we have that

$$I_{\phi^D}^{MC}(i,\mathbf{p}) = \frac{q_i\left(\Pr\left[{}^{\phi}B(i)|\mathbf{p}\right] + \Pr\left[{}^{\phi}V_1(i)|\mathbf{p}\right]\right)}{\Pr\left[\left\{\mathbf{x}:\phi(\mathbf{x})=0\right\}|\mathbf{p}\right]} = I_{\phi}^{V-FC}(i,\mathbf{p}).$$

(3.12.8) follows analogously.

Thus, all characteristics pertinent to the Vesely – Fussell reliability importance, is transferred onto Meng's criticality importance, in particular the definition of Meng's criticality importance in terms of systems with modules.

Theorem 3.12.15: *Meng's Criticality Importance under Systems with Modules*

For component c_i in module m_k from a system with structure function ψ under vector of component availabilities $\mathbf{p}$:

$$I_{\phi}^{MC}(i,\mathbf{p}) = I_{\psi}^{MC}(k,\mathbf{p})I_{\phi_k}^{MC}(i,\mathbf{p}_k) \tag{3.12.9}$$

For our audio playback system, we have from Corollary 3.12.7 that $I_{\psi}^{B}(3,\mathbf{p}) = I_{\psi}^{B}(3) = 1$ as module m_k is in series with the rest of the system. We also have

${}^{\phi_3}W(3)$	${}^{\phi_3}B(3)$	${}^{\phi_3}E_1(3)$	${}^{\phi_3}V_1(3)$	${}^{\phi_3}E_2(3)$	${}^{\phi_3}V_2(3)$	${}^{\phi_3}N_1(3)$	${}^{\phi_3}N_2(3)$
$(\cdot,0)$	Yes	Yes		Yes			
$(\cdot,1)$				Yes	Yes		

Table 3.12.3: *Decomposition of ${}^{\phi_3}W(3)$ into its subgroups for the audio playback system*

Hence, we have that $I_{\phi_3}^{MC}(3)=\frac{2}{3}$, $I_{\phi_3}^{MC}(3,\mathbf{p})=p_3/(1-q_3q_4)$ and that (3.12.9) yields the correct component importance.

Lemma 3.12.16:

For $c_i >_{\phi}^{cn} c_k$, we have

i. If $(1_i,\cdot_k,\mathbf{x})\in {}^{\phi}V_2(k)$ then $(\cdot_i,1_k,\mathbf{x})\in {}^{\phi}V_2(i)\cup {}^{\phi}B(i)$

ii. If $(0_i,\cdot_k,\mathbf{x})\in {}^{\phi}V_2(k)$ then $(\cdot_i,0_k,\mathbf{x})\in {}^{\phi}V_2(i)$

Proof:

Under Theorem 3.10.8 $c_i >_{\phi}^{cn} c_k$ and $c_i >_{\phi^D}^{cn} c_k$ are equivalent expressions. By Lemma 3.12.12, $(1_i,\cdot_k,\mathbf{x})\in {}^{\phi}V_2(k)$ implies that $(0_i,\cdot_k,\overline{\mathbf{x}})\in {}^{\phi^D}V_1(k)$ and, by Lemma 3.12.8, implies $(\cdot_i,0_k,\overline{\mathbf{x}})\in {}^{\phi^D}B(i)\cup {}^{\phi^D}V_1(i)$. Again by Lemma 3.12.12, we have $(\cdot_i,1_k,\mathbf{x})\in {}^{\phi}V_2(i)\cup {}^{\phi}B(i)$. Part (ii) follows analogously, $(0_i,\cdot_k,\mathbf{x})\in {}^{\phi}V_2(k)$ gives $(1_i,\cdot_k,\overline{\mathbf{x}})\in {}^{\phi^D}V_1(k)$ yielding $(\cdot_i,1_k,\overline{\mathbf{x}})\in {}^{\phi^D}V_1(i)$ and in turn $(\cdot_i,0_k,\mathbf{x})\in {}^{\phi}V_2(i)$.

Theorem 3.12.17:

If $c_i >_{\phi}^{cn} c_k$ then $I_{\phi}^{MC}(i,\mathbf{p})>I_{\phi}^{MC}(k,\mathbf{p})$ for all $\mathbf{0}<\mathbf{p}<\mathbf{1}$ satisfying $p_i\geq p_k$

Proof:

By the pivot decomposition of c_i in (3.12.5)

$$I_{\phi}^{MC}(k,\mathbf{p})=\frac{p_k\left(p_i\Pr\left[(1_i,\cdot_k,\mathbf{x})\in {}^{\phi}B(k)\cup {}^{\phi}V_2(k)\,|\,\mathbf{p}\right]+q_i\Pr\left[(0_i,\cdot_k,\mathbf{x})\in {}^{\phi}B(k)\cup {}^{\phi}V_2(k)\,|\,\mathbf{p}\right]\right)}{\Pr\left[\{\mathbf{x}:\phi(\mathbf{x})=1\}\,|\,\mathbf{p}\right]}$$

and letting $\mathbf{0}<\mathbf{p}<\mathbf{1}$ with $p_i\geq p_k$ we have

$$I_{\phi}^{MC}(k,\mathbf{p})\leq\frac{p_ip_k\Pr\left[(1_i,\cdot_k,x)\in {}^{\phi}B(k)\cup {}^{\phi}V_2(k)\,|\,\mathbf{p}\right]+p_iq_k\Pr\left[(0_i,\cdot_k,x)\in {}^{\phi}B(k)\cup {}^{\phi}V_2(k)\,|\,\mathbf{p}\right]}{\Pr\left[\{\mathbf{x}:\phi(\mathbf{x})=1\}\,|\,\mathbf{p}\right]}$$

From Lemma 3.12.15 and Lemma 3.12.8,

$\{\mathbf{x}:(0_i,\cdot_k,\mathbf{x})\in {}^{\phi}B(k)\cup {}^{\phi}V_2(k)\}\subseteq\{\mathbf{x}:(\cdot_i,0_k,\mathbf{x})\in {}^{\phi}B(i)\cup {}^{\phi}V_2(i)\}$ and

$\left\{\mathbf{x}:(1_i,\cdot_k,\mathbf{x})\in {}^{\phi}B(k)\cup {}^{\phi}V_2(k)\right\}\subseteq\left\{\mathbf{x}:(\cdot_i,1_k,\mathbf{x})\in {}^{\phi}B(i)\cup {}^{\phi}V_2(i)\right\}$. Hence

$\Pr\left[\left\{\mathbf{x}:(0_i,\cdot_k,\mathbf{x})\in {}^{\phi}B(k)\cup {}^{\phi}V_2(k)\right\}\right]\le\Pr\left[\left\{\mathbf{x}:(\cdot_i,0_k,\mathbf{x})\in {}^{\phi}B(i)\cup {}^{\phi}V_2(i)\right\}\right]$ and

$\Pr\left[\left\{\mathbf{x}:(1_i,\cdot_k,\mathbf{x})\in {}^{\phi}B(k)\cup {}^{\phi}V_2(k)\right\}\right]\le\Pr\left[\left\{\mathbf{x}:(\cdot_i,1_k,\mathbf{x})\in {}^{\phi}B(i)\cup {}^{\phi}V_2(i)\right\}\right]$ yielding

$$I_{\phi}^{MC}(k,\mathbf{p})\le\frac{p_i\left(p_k\Pr\left[(\cdot_i,1_k,x)\in {}^{\phi}B(i)\cup {}^{\phi}V_2(i)\middle|\mathbf{p}\right]+q_k\Pr\left[(\cdot_i,0_k,x)\in {}^{\phi}B(i)\cup {}^{\phi}V_2(i)\middle|\mathbf{p}\right]\right)}{\Pr\left[\left\{\mathbf{x}:\phi(\mathbf{x})=1\right\}\middle|\mathbf{p}\right]}.$$

Thus $I_{\phi}^{MC}(k,\mathbf{p})\le I_{\phi}^{MC}(i,\mathbf{p})$. As $c_i >_{\phi}^{cn} c_k$ we have, from Corollary 3.10.9, that there exists a minimal path set ${}^{\phi}PS_j^m(i\setminus k)\in {}^{\phi}A_{c_i\setminus c_k}^m$ such that ${}^{\phi}PS_j^m(i\setminus k)\cup\{k\}\setminus\{i\}$ is not a path set i.e. $\phi\left(0_i,0_k,\mathbf{1}^{{}^{\phi}PS_j^m(i\setminus k)\setminus\{i\}},\mathbf{0}\right)=\phi\left(0_i,1_k,\mathbf{1}^{{}^{\phi}PS_j^m(i\setminus k)\setminus\{i\}},\mathbf{0}\right)=0$. Thus $\phi\left(0_i,\cdot_k,\mathbf{1}^{{}^{\phi}PS_j^m(i\setminus k)\setminus\{i\}},\mathbf{0}\right)\notin {}^{\phi}B(k)\cup {}^{\phi}V_2(k)$ but, as ${}^{\phi}PS_j^m(i\setminus k)$ is a minimal path set, $\phi\left(\cdot_i,0_k,\mathbf{1}^{{}^{\phi}PS_j^m(i\setminus k)\setminus\{i\}},\mathbf{0}\right)\in {}^{\phi}B(i)\cup {}^{\phi}V_2(i)$. Hence $I_{\phi}^{MC}(k,\mathbf{p})<I_{\phi}^{MC}(i,\mathbf{p})$ since $\left\{\mathbf{x}:(\cdot_k,\mathbf{x})\in {}^{\phi}B(k)\cup {}^{\phi}V_2(k)\right\}\subset\left\{\mathbf{x}:(\cdot_i,\mathbf{x})\in {}^{\phi}B(i)\cup {}^{\phi}V_2(i)\right\}$.

Theorem 3.12.18:

If $c_i =_{\phi}^{cn} c_k$ and $\mathbf{0}<\mathbf{p}<\mathbf{1}$, then either

i. $I_{\phi}^{MC}(i,\mathbf{p})=I_{\phi}^{MC}(k,\mathbf{p})$ for all $\mathbf{p}$ or

ii. $I_{\phi}^{MC}(i,\mathbf{p})>I_{\phi}^{MC}(k,\mathbf{p})$ if and only if $p_i>p_k$.

Proof:

From (3.12.5) and Lemma 3.12.12 we have

$$I_{\phi}^{MC}(i,\mathbf{p})=\frac{p_i\left(\Pr\left[{}^{\phi}B(i)\middle|\mathbf{p}\right]+\Pr\left[{}^{\phi}V_2(i)\middle|\mathbf{p}\right]\right)}{\Pr\left[\left\{\mathbf{x}:\phi(\mathbf{x})=1\right\}\middle|\mathbf{p}\right]}=\frac{p_i\left(\Pr\left[{}^{\phi^D}B(i)\middle|\overline{\mathbf{p}}\right]+\Pr\left[{}^{\phi^D}V_2(i)\middle|\overline{\mathbf{p}}\right]\right)}{\Pr\left[\left\{\overline{\mathbf{x}}:\phi^D(\mathbf{x})=0\right\}\middle|\overline{\mathbf{p}}\right]}=I_{\phi^D}^{V-F}(i,\overline{\mathbf{p}})$$

Let $c_i =_{\phi}^{cn} c_k$. By Theorem 3.10.8, $c_i =_{\phi^D}^{cn} c_k$. By Theorem 3.12.12, either $I_{\phi^D}^{V-F}(i,\overline{\mathbf{p}})=I_{\phi^D}^{V-F}(k,\overline{\mathbf{p}})$ for all $\mathbf{0}<\overline{\mathbf{p}}<\mathbf{1}$ or $I_{\phi^D}^{V-F}(i,\overline{\mathbf{p}})>I_{\phi^D}^{V-F}(k,\overline{\mathbf{p}})$ if and only if $\overline{p}_i<\overline{p}_k$ i.e. $q_i<q_k$. The former case yields $I_{\phi}^{MC}(i,\mathbf{p})=I_{\phi}^{MC}(k,\mathbf{p})$ for all $\mathbf{0}<\mathbf{p}<\mathbf{1}$ and the latter case gives $I_{\phi}^{MC}(i,\mathbf{p})>I_{\phi}^{MC}(k,\mathbf{p})$ if and only if $p_i>p_k$.

Corollary 3.12.19:

If component c_i is in parallel with the rest of the system then, for all $\mathbf{0} < \mathbf{p} < \mathbf{1}$ satisfying $p_i \geq p_k$, $I_\phi^{MC}(i,\mathbf{p}) \geq I_\phi^{MC}(k,\mathbf{p})$. Strict inequality holds for some fixed $\mathbf{p}$ satisfying $p_i \geq p_k$ unless component c_k is also in parallel with the rest of the system i.e. a one component minimal path set.

Proof:

Corollary 3.12.19 follows from Theorem 3.12.17 in a similar way as Corollary 3.12.11 follows Theorem 3.12.9. Alternatively, we know that $I_\phi^M(i,\mathbf{p}) = I_{\phi^D}^{V-F}(i,\overline{\mathbf{p}})$. By Lemma 2.3.6, if c_i is in parallel with the rest of the system under ϕ, then c_i is in series with the rest of the system under ϕ^D. Therefore, Corollary 3.12.11 holds and the required result follows.

3.13 Link and Path Set Cut Set Importance

Just as in the case of Butler, Page and Perry [24] suggest that a ranking system best describes component importance. They believe that component importance should be based solely on the construction of a system and not on the availabilities of the components.

Page and Perry felt that components whose failure minimises overall system availability should be designated as the most important components. As this definition takes only system failure into account, Page and Perry proposed that important components are also those components that, when are in a functioning state, maximise overall system availability. These ideas gave rise to the definition of Link importance.

Definition 3.13.1: *Link Importance*

Let $p_j = p$ for $j \in I$ and $0 < p < 1$. We say that component c_i is more link important than component c_k, denoted $c_i >_\phi^L c_k$, if and only if $h_\phi(0_k, \mathbf{p}) \geq h_\phi(0_i, \mathbf{p})$ and $h_\phi(1_i, \mathbf{p}) \geq h_\phi(1_k, \mathbf{p})$. If $c_i >_\phi^L c_k$ and $c_k >_\phi^L c_i$ occur simultaneously then we say that component c_i is equally link important as component c_k and we shall denote it by $c_i =_\phi^L c_k$.

From Definition 3.13.1, it follows immediately that $c_i =_\phi^L c_k$ occurs if and only if $h_\phi(0_k, \mathbf{p}) = h_\phi(0_i, \mathbf{p})$ and $h_\phi(1_i, \mathbf{p}) = h_\phi(1_k, \mathbf{p})$.

As the link importance of a component can be found only if two conditions are satisfied, Link importance can, at most, provide a partial ordering of importance of all components of a system.

For our audio playback system, we recall that $h_\phi(\mathbf{p}) = p_1 p_2 (1 - q_3 q_4)$ and so $h_\phi(1_2, \mathbf{p}) > h_\phi(1_3, \mathbf{p})$ occurs if and only of $p_2 < (1 - q_3 q_4)$ whereas $h_\phi(0_2, \mathbf{p}) \leq h_\phi(0_3, \mathbf{p})$ holds for all $\mathbf{p}$. Thus, $c_2 >_\phi^L c_3$ occurs only if $p_2 < (1 - q_3 q_4)$.

Furthermore, we can find the link importance of components with the dual system with structure function ϕ^D.

Theorem 3.13.2: *Link Importance under the Dual System*

We have $c_i >_\phi^L c_k$ if and only if $c_i >_{\phi^D}^L c_k$.

Proof:

Now $c_i >_\phi^L c_k$ occurs if and only if $h_\phi(0_k, \mathbf{p}) \geq h_\phi(0_i, \mathbf{p})$ and $h_\phi(1_i, \mathbf{p}) \geq h_\phi(1_k, \mathbf{p})$.

By (2.3.3) we have $h_{\phi^D}(1_k, \overline{\mathbf{p}}) \leq h_{\phi^D}(1_i, \overline{\mathbf{p}})$ and $h_{\phi^D}(0_i, \overline{\mathbf{p}}) \leq h_{\phi^D}(0_k, \overline{\mathbf{p}})$. Hence $c_i >_{\phi^D}^L c_k$.

Theorem 3.13.3:

If $c_i >_\phi^L c_j$ and $c_j >_\phi^L c_k$ then $c_i >_\phi^L c_k$.

Proof:

Let $c_i >_\phi^L c_j$ and $c_j >_\phi^L c_k$. From Definition 3.13.1 we have

$h_\phi(1_i,\mathbf{p}) \geq h_\phi(1_j,\mathbf{p}) \geq h_\phi(1_k,\mathbf{p})$ and $h_\phi(0_i,\mathbf{p}) \leq h_\phi(0_j,\mathbf{p}) \leq h_\phi(0_k,\mathbf{p})$. Hence $c_i >_\phi^L c_k$.

Armstrong [25] relaxed the restraints on $\mathbf{p}$ in Definition 3.13.1 to include the case where $\mathbf{p} = (p_1, p_2, \ldots, p_{n-1}, p_n)$ and $p_i = p_k$. Armstrong also provided the following two results.

Theorem 3.13.4: *Link Importance versus Birnbaum's Importance*

For $\mathbf{p} = (p, p, \ldots, p, p)$ and $0 < p < 1$:

i. If $c_i >_\phi^L c_k$ then $I_\phi^B(i) \geq I_\phi^B(k)$

ii. If $c_i =_\phi^L c_k$ then $I_\phi^B(i) = I_\phi^B(k)$

iii. If $c_i >_\phi^L c_k$ then $I_\phi^B(i,\mathbf{p}) \geq I_\phi^B(k,\mathbf{p})$

iv. If $c_i =_\phi^L c_k$ then $I_\phi^B(i,\mathbf{p}) = I_\phi^B(k,\mathbf{p})$

Proof:

Let $c_i >_\phi^L c_k$. It follows that, for $\mathbf{p} = (p, p, \ldots, p, p)$, $h_\phi(0_k,\mathbf{p}) \geq h_\phi(0_i,\mathbf{p})$ and $h_\phi(1_i,\mathbf{p}) \geq h_\phi(1_k,\mathbf{p})$ yielding $h_\phi(1_i,\mathbf{p}) - h_\phi(0_i,\mathbf{p}) \geq h_\phi(1_k,\mathbf{p}) - h_\phi(0_k,\mathbf{p})$ and in particular $h_\phi(1_i,\tfrac{1}{2}) - h_\phi(0_i,\tfrac{1}{2}) \geq h_\phi(1_k,\tfrac{1}{2}) - h_\phi(0_k,\tfrac{1}{2})$. Hence, by (3.1.5) and (3.1.10) $I_\phi^B(i) \geq I_\phi^B(k)$ and $I_\phi^B(i,\mathbf{p}) \geq I_\phi^B(k,\mathbf{p})$ holds. For $c_i =_\phi^L c_k$, the proof follows analogously.

Page and Perry also realised that the system availability function $h_\phi(\mathbf{p})$ is related to the minimal cut and minimal path sets of a system and as $h_\phi(\mathbf{p})$ is associated

with the link importance of components, Page and Perry defined a new importance ranking based on minimal cut and minimal path sets.

For $j = \{0,1\}$, let ${}^{\phi}SMPS_i(j)$ (${}^{\phi}SMCS_i(j)$) denote the smallest minimal path (cut) set for which $x_i = j$, ${}^{\phi}NSMPS_i(j)$ (${}^{\phi}NSMCS_i(j)$) the number of components in ${}^{\phi}SMPS_i(j)$ (${}^{\phi}SMCS_i(j)$) and let $\left|{}^{\phi}SMPS_i(j)\right|$ ($\left|{}^{\phi}SMCS_i(j)\right|$) denote the number of minimal path (cut) sets having ${}^{\phi}NSMPS_i(j)$ (${}^{\phi}NSMCS_i(j)$) components.

Definition 3.13.5: *Path Set Cut Set Importance*

We say component c_i is more path set cut set important than component c_k, denoted $c_i >_{\phi}^{PC} c_k$, if the following conditions are all true.

i. ${}^{\phi}NSMPS_i(1) \le {}^{\phi}NSMPS_k(1)$ holds. For equality, we additionally require that $\left|{}^{\phi}SMPS_i(1)\right| \ge \left|{}^{\phi}SMPS_k(1)\right|$.

ii. ${}^{\phi}NSMCS_i(1) \ge {}^{\phi}NSMCS_k(1)$ holds. For equality, we additionally require that $\left|{}^{\phi}SMCS_i(1)\right| \le \left|{}^{\phi}SMCS_k(1)\right|$.

iii. ${}^{\phi}NSMPS_i(0) \ge {}^{\phi}NSMPS_k(0)$ holds. For equality, we additionally require that $\left|{}^{\phi}SMPS_i(0)\right| \le \left|{}^{\phi}SMPS_k(0)\right|$.

iv. ${}^{\phi}NSMCS_i(0) \le {}^{\phi}NSMCS_k(0)$ holds. For equality, we additionally require that $\left|{}^{\phi}SMCS_i(0)\right| \ge \left|{}^{\phi}SMCS_k(0)\right|$.

If $c_i >_{\phi}^{PC} c_k$ and $c_k >_{\phi}^{PC} c_i$ occur simultaneously then we say that component c_i is equally path set cut set important as component c_k and we shall denote it by $c_i =_{\phi}^{PC} c_k$.

For our audio system, we have ${}^{\phi}CS_1^m = \{3,4\}$, ${}^{\phi}CS_2^m = \{1\}$, ${}^{\phi}CS_3^m = \{2\}$, ${}^{\phi}PS_1^m = \{1,2,4\}$ and ${}^{\phi}PS_2^m = \{1,2,3\}$ yielding

${}^{\phi}NSMPS_2(1) = {}^{\phi}NSMPS_3(1) = {}^{\phi}NSMPS_3(1) = 3$

$$\left|{}^{\phi}SMPS_2(1)\right| = \left|{}^{\phi}SMCS_3(1)\right| = \left|{}^{\phi}SMCS_2(0)\right| = \left|{}^{\phi}SMCS_3(0)\right| = 2$$

$${}^{\phi}NSMCS_2(1) = {}^{\phi}NSMCS_3(1) = {}^{\phi}NSMCS_2(0) = \left|{}^{\phi}SMPS_3(1)\right|$$
$$= \left|{}^{\phi}SMPS_3(0)\right| = \left|{}^{\phi}SMPS_2(1)\right| = 1$$

and the terms ${}^{\phi}NSMPS_2(0)$ and $\left|{}^{\phi}SMPS_2(0)\right|$ is undefined. Therefore, all required conditions for Definition 3.13.5 are met and we have $c_2 >_{\phi}^{PC} c_3$.

We can now define Path Set Cut Set importance under the dual system.

Theorem 3.13.6: *Path Set Cut Set Importance under the Dual System*

$c_i >_{\phi^D}^{PC} c_k$ occurs if and only if $c_i >_{\phi}^{PC} c_k$ occurs.

Proof:

The result follows directly from applying Lemma 2.3.6 to Definition 3.13.5.

As for Link importance, Path Set Cut Set importance is forms only a partial ordering for component importance. Moreover, $c_i =_{\phi}^{PC} c_k$ implies that all the inequalities under conditions (i), (ii), (iii), and (iv) of Definition 3.13.5 are replaced by equality signs.

Page and Perry then found the following result relating Link importance to Path Set Cut Set importance.

Theorem 3.13.7: *Link Importance versus Path Set Cut Set Importance*

If $c_i >_{\phi}^{L} c_k$ then $c_i >_{\phi}^{PC} c_k$ or $c_i =_{\phi}^{PC} c_k$.

Proof:

Let $\mathbf{p} = (p, p, \ldots, p, p)$ for $0 < p < 1$ and $c_i >_{\phi}^{L} c_k$.

From (2.1.5) and (2.1.6) we have

$$h_\phi(\mathbf{p}) = p h_\phi(1_i,\mathbf{p}) + q h_\phi(0_i,\mathbf{p}) = p \sum_{\{\mathbf{x}:x_i=1\}} \phi(\mathbf{x}) \prod_{l=1}^{n} p^{x_l} q^{1-x_l} + q \sum_{\{\mathbf{x}:x_i=0\}} \phi(\mathbf{x}) \prod_{l=1}^{n} p^{x_l} q^{1-x_l}$$

Let ${}^{\phi}a_r^i(1)$ (${}^{\phi}a_r^i(0)$) denote the number of path sets ${}^{\phi(1_i,\mathbf{x})}PS_j$ (${}^{\phi(0_i,\mathbf{x})}PS_j$) that contain *r* components, then $h_\phi(\mathbf{p}) = p\sum_{r=1}^{n} {}^{\phi}a_r^i(1) p^{r-1} q^{n-r} + q\sum_{r=1}^{n} {}^{\phi}a_r^i(0) p^r q^{n-r-1}$. Thus $h_\phi(1_i,\mathbf{p}) = \sum_{r=1}^{n} {}^{\phi}a_r^i(1) p^{r-1} q^{n-r}$ and $h_\phi(0_i,\mathbf{p}) = \sum_{r=1}^{n} {}^{\phi}a_r^i(0) p^r q^{n-r-1}$. Therefore, as $c_i >_\phi^L c_k$, we have that $h_\phi(1_i,\mathbf{p}) - h_\phi(1_k,\mathbf{p}) = \sum_{r=1}^{n} \left\{ {}^{\phi}a_r^i(1) - {}^{\phi}a_r^k(1) \right\} p^{r-1} q^{n-r} \geq 0$ and $h_\phi(0_k,\mathbf{p}) - h_\phi(0_i,\mathbf{p}) = \sum_{r=1}^{n} \left\{ {}^{\phi}a_r^k(0) - {}^{\phi}a_r^i(0) \right\} p^r q^{n-r-1} \geq 0$ holds for all $0 < p < 1$. In particular, for p sufficiently large, we can conclude condition (i) of Definition 3.13.5 occurs in the former case and, when **p** is sufficiently small, condition (iii) can be construed in the latter case. Similarly, conditions (ii) and (iv) can be deduced by applying Theorem 3.12.2, Lemma 2.3.6, (2.3.3) and (2.3.4) to $h_\phi(\mathbf{p})$.

4 TIME DEPENDENT IMPORTANCE MEASURES

4.1 Barlow – Proschan Importance

Barlow and Proschan [26] wanted to define an importance measure that determined which component of the system is the most probable cause of the system failure at a given moment of the system's lifetime.

We will initially assume that all systems operate without component repair. Thus, we will refer to system failure at time t as the first failure of the system i.e. the system is functioning in the time interval $[0,t]$.

Proposition 4.1.1:

If component c_i within a system with structure function ϕ has a lifetime distribution function $F_i(t)$ with probability density function $f_i(t)$ then the probability that c_i causes a system failure at time u, given that the system fails at time u, is:

$$\frac{\left\{h_\phi\left(1_i,\overline{\mathbf{F}}(u)\right)-h_\phi\left(0_i,\overline{\mathbf{F}}(u)\right)\right\}f_i(u)}{\sum_{j=1}^{n}\left\{h_\phi\left(1_j,\overline{\mathbf{F}}(u)\right)-h_\phi\left(0_j,\overline{\mathbf{F}}(u)\right)\right\}f_j(u)} \tag{4.1.1}$$

Also, the probability that c_i causes system failure in the time interval $[0,t]$, given that system fails in $[0,t]$, is:

$$\frac{\int_0^t\left\{h_\phi\left(1_i,\overline{\mathbf{F}}(u)\right)-h_\phi\left(0_i,\overline{\mathbf{F}}(u)\right)\right\}dF_i(u)}{\sum_{j=1}^{n}\int_0^t\left\{h_\phi\left(1_j,\overline{\mathbf{F}}(u)\right)-h_\phi\left(0_j,\overline{\mathbf{F}}(u)\right)\right\}dF_j(u)} \tag{4.1.2}$$

where $dF_i(u)=f_i(u)du$.

Proof:

Consider the time interval $[u,u+du]$ and define du such that, at most, only one component can fail in $[u,u+du]$. By (2.1.5) and the fact that ϕ is a binary valued

function, the probability that the system is functioning if c_i is functioning at time u and is failed otherwise is $\Pr\left[\delta_i\left(\phi,\mathbf{x}(u)\right)=1\right]=h_\phi\left(1_i,\overline{\mathbf{F}}(u)\right)-h_\phi\left(0_i,\overline{\mathbf{F}}(u)\right)$. Also, the probability that the failure of c_i occurs in $[u,u+du]$ is approximately $f_i(u)du$. Therefore, $\left\{h_\phi\left(1_i,\overline{\mathbf{F}}(u)\right)-h_\phi\left(0_i,\overline{\mathbf{F}}(u)\right)\right\}f_i(u)du$ expresses the probability that c_i causes system failure in $[u,u+du]$.

Hence, $\sum_{j=1}^{n}\left\{h_\phi\left(1_j,\overline{\mathbf{F}}(u)\right)-h_\phi\left(0_j,\overline{\mathbf{F}}(u)\right)\right\}f_j(u)du$ is the probability that system failure occurs in $[u,u+du]$. As du is chosen arbitrarily, (4.1.1) now follows. Moreover, integrating $\left\{h_\phi\left(1_i,\overline{\mathbf{F}}(u)\right)-h_\phi\left(0_i,\overline{\mathbf{F}}(u)\right)\right\}f_i(u)du$ and $\sum_{j=1}^{n}\left\{h_\phi\left(1_j,\overline{\mathbf{F}}(u)\right)-h_\phi\left(0_j,\overline{\mathbf{F}}(u)\right)\right\}f_j(u)du$ over the interval $[0.t]$ yield (4.1.2).

As a component can cause system failure throughout the lifetime of system, Barlow and Proschan defined their importance measure by letting $t\to\infty$ in (4.1.2).We note that the denominator of (4.1.2) will become one since it represents the probability that the system will eventually fail.

Definition 4.1.2: *Barlow – Proschan Reliability Importance*

The Barlow – Proschan reliability importance, denoted $I_\phi^{B-P}\left(i,\overline{\mathbf{F}}(t)\right)$, of component c_i within a system with structure function ϕ under vector of component availabilities $\overline{\mathbf{F}}(t)$ at time *t* is:

$$I_\phi^{B-P}\left(i,\overline{\mathbf{F}}(t)\right)=\int_0^\infty\left\{h_\phi\left(1_i,\overline{\mathbf{F}}(t)\right)-h_\phi\left(0_i,\overline{\mathbf{F}}(t)\right)\right\}dF_i(t) \qquad (4.1.3)$$

For our audio playback system, we recall that $dF_i(t)=\lambda_i R'(t)\exp\left\{-\lambda_i R(t)\right\}dt$ where $\lim_{t\to0}\lambda_i R(t)=0$ and $\lim_{t\to\infty}\lambda_i R(t)=\infty$, $h_\phi\left(1_3,\overline{\mathbf{F}}(t)\right)=\overline{F}_1(t)\overline{F}_2(t)=e^{-(\lambda_1+\lambda_2)R(t)}$,

$h_\phi\left(1_2,\overline{\mathbf{F}}(t)\right)=\overline{F}_1(t)\left[1-F_3(t)F_4(t)\right]=e^{-\lambda_1R(t)}\left(1-\left(1-e^{-\lambda_3R(t)}\right)\left(1-e^{-\lambda_4R(t)}\right)\right)$,

$h_\phi\left(1_3,\overline{\mathbf{F}}(t)\right)=\overline{F}_1(t)\overline{F}_2(t)=e^{-(\lambda_1+\lambda_2)R(t)}$, $h_\phi\left(0_2,\overline{\mathbf{F}}(t)\right)=0$ and

$h_\phi\left(0_3,\overline{\mathbf{F}}(t)\right)=\overline{F}_1(t)\overline{F}_2(t)F_4(t)=e^{-(\lambda_1+\lambda_2)R(t)}\left(1-e^{-\lambda_4 R(t)}\right)$ yielding

$I_\phi^{B-P}\left(2,\overline{\mathbf{F}}(t)\right)=\lambda_2\left[\left(\lambda_1+\lambda_2+\lambda_3\right)^{-1}+\left(\lambda_1+\lambda_2+\lambda_4\right)^{-1}-\left(\lambda_1+\lambda_2+\lambda_3+\lambda_4\right)^{-1}\right]$ and

$I_\phi^{B-P}\left(3,\overline{\mathbf{F}}(t)\right)=\lambda_3\left[\left(\lambda_1+\lambda_2+\lambda_3\right)^{-1}-\left(\lambda_1+\lambda_2+\lambda_3+\lambda_4\right)^{-1}\right]$.

We now have the following properties relating to the Barlow – Proschan reliability importance.

Theorem 4.1.3: *Properties of Barlow-Proschan Reliability Importance*

i. $0\le I_\phi^{B-P}\left(i,\overline{\mathbf{F}}(t)\right)\le 1$

ii. $\sum_{j=1}^{n} I_\phi^{B-P}\left(j,\overline{\mathbf{F}}(t)\right)=1$

iii. If $n\ge 2$ and the intersection of the supports of $F_j(t)$, $j=1,2,\ldots,n-1,n$, has positive probability with respect to the product distribution $\prod_{j=1}^{n}F_j(t)$ i.e. the lifetimes of all components overlap each other, then $0<I_\phi^{B-P}\left(i,\overline{\mathbf{F}}(t)\right)<1$.

Proof:

As $\left\{h_\phi\left(1_i,\overline{\mathbf{F}}(t)\right)-h_\phi\left(0_i,\overline{\mathbf{F}}(t)\right)\right\}dF_i(t)$ expresses the probability that c_i causes system failure in $[t,t+dt]$, (4.3) represents the probability that c_i causes system failure in $[0,\infty)$ and we have $0\le I_\phi^{B-P}\left(i,\overline{\mathbf{F}}(t)\right)\le 1$.

Since only one component can fail at any given instance in time, $\sum_{j=1}^{n} I_\phi^{B-P}\left(j,\overline{\mathbf{F}}(t)\right)$ signifies the probability that the system will eventually fail. Thus (ii) follows. Assume that the lifetimes of all components overlap each other. Now, if $I_\phi^{B-P}\left(i,\overline{\mathbf{F}}(t)\right)=0$ then $h_\phi\left(1_i,\overline{\mathbf{F}}(t)\right)-h_\phi\left(0_i,\overline{\mathbf{F}}(t)\right)=0$. Thus c_i is irrelevant at time t

and hence contradicts the fact that ϕ is monotone. Similarly, if $I_{\phi}^{B-P}\left(i,\overline{\mathbf{F}}(t)\right)=1$ then $h_{\phi}\left(1_i,\overline{\mathbf{F}}(t)\right)-h_{\phi}\left(0_i,\overline{\mathbf{F}}(t)\right)=1$ and again we contradict the fact that ϕ is monotone. We note that a component can be irrelevant without contradicting ϕ being monotone. This occurs when the lifetimes of all components do not overlap each other. For example, consider two components in parallel with c_1 having a lifetime distribution support $t\in[0,1]$ and c_2 having a lifetime distribution support $t\in[2,3]$. It follows that $I_{\phi}^{B-P}\left(1,\overline{\mathbf{F}}(t)\right)=0$ and $I_{\phi}^{B-P}\left(2,\overline{\mathbf{F}}(t)\right)=1$ since c_2 will always function for $t\in[0,1]$.

Theorem 4.1.4: *Barlow – Proschan Reliability Importance under the Dual System*

$$I_{\phi^D}^{B-P}\left(i,\mathbf{F}(t)\right)=I_{\phi}^{B-P}\left(i,\overline{\mathbf{F}}(t)\right) \tag{4.1.4}$$

Proof:

Applying (2.3.3) to (4.1.3) yields

$$\begin{aligned} I_{\phi^D}^{B-P}\left(i,\mathbf{F}(t)\right) &= \int_0^{\infty}\left\{h_{\phi^D}\left(1_i,\mathbf{F}(t)\right)-h_{\phi^D}\left(0_i,\mathbf{F}(t)\right)\right\}dF_i(t) \\ &= \int_0^{\infty}\left\{h_{\phi}\left(1_i,\overline{\mathbf{F}}(t)\right)-h_{\phi}\left(0_i,\overline{\mathbf{F}}(t)\right)\right\}dF_i(t) \\ &= I_{\phi}^{B-P}\left(i,\overline{\mathbf{F}}(t)\right) \end{aligned}$$

Thus, the Barlow – Proschan importance measure is itself its own dual measure.

For system with modules, we also have that

Theorem 4.1.5: *Barlow-Proschan Reliability Importance for Modules*

The Barlow-Proschan reliability importance for component c_i in module m_k under structure function ψ under vector of component availabilities $\overline{\mathbf{F}}(t)$ at time t is:

$$I_{\phi}^{B-P}\left(i,\overline{\mathbf{F}}(t)\right)=\int_0^{\infty}\left\{h_{\psi}\left(\mathbf{1}_k,\overline{\mathbf{F}}(t)\right)-h_{\psi}\left(\mathbf{0}_k,\overline{\mathbf{F}}(t)\right)\right\}\times\left\{h_{\phi_k}\left(1_i,\overline{\mathbf{F}}(t)\right)-h_{\phi_k}\left(1_i,\overline{\mathbf{F}}(t)\right)\right\}dF_i(t) \tag{4.1.5}$$

The Barlow-Proschan reliability importance for module m_k under structure function ψ under vector of component availabilities $\overline{\mathbf{F}}(t)$ at time *t* is:

$$I_{\psi}^{B-P}\left(k,\overline{\mathbf{F}}(t)\right)=\sum_{j\in m_k}I_{\phi}^{B-P}\left(j,\overline{\mathbf{F}}(t)\right) \tag{4.1.6}$$

Proof:

As in Proposition 4.1.1, consider the time interval $[t,t+dt]$.

Now $h_{\psi}\left(\mathbf{1}_k,\overline{\mathbf{F}}(t)\right)-h_{\psi}\left(\mathbf{0}_k,\overline{\mathbf{F}}(t)\right)$ represents the probability that the system is functioning if module m_k is functioning at time *t*, but is failed otherwise.

Similarly, $h_{\phi_k}\left(1_i,\overline{\mathbf{F}}(t)\right)-h_{\phi_k}\left(1_i,\overline{\mathbf{F}}(t)\right)$ is the probability that module m_k is functioning if component c_i is functioning at time *t*, but is failed otherwise.

Hence, $\int_0^{\infty}\left\{h_{\psi}\left(\mathbf{1}_k,\overline{\mathbf{F}}(t)\right)-h_{\psi}\left(\mathbf{0}_k,\overline{\mathbf{F}}(t)\right)\right\}\left\{h_{\phi_k}\left(1_i,\overline{\mathbf{F}}(t)\right)-h_{\phi_k}\left(1_i,\overline{\mathbf{F}}(t)\right)\right\}dF_i(t)$ signifies the probability that the failure of c_i causes the failure of m_k, which in turn, causes the failure of the system. As c_i can only cause system failure through the failure of m_k, (4.1.5) follows.

As integration is a linear operator, we have that:

$$\sum_{j\in m_k}I_{\phi}^{B-P}\left(j,\overline{\mathbf{F}}(t)\right)=\int_0^{\infty}\left\{h_{\psi}\left(\mathbf{1}_k,\overline{\mathbf{F}}(t)\right)-h_{\psi}\left(\mathbf{0}_k,\overline{\mathbf{F}}(t)\right)\right\}\sum_{j\in m_k}\left\{h_{\phi_k}\left(1_j,\overline{\mathbf{F}}(t)\right)-h_{\phi_k}\left(1_j,\overline{\mathbf{F}}(t)\right)\right\}dF_j(t)$$

As in Proposition 4.1.1, $\sum_{j\in m_k}\left\{h_{\phi_k}\left(1_j,\overline{\mathbf{F}}(t)\right)-h_{\phi_k}\left(1_j,\overline{\mathbf{F}}(t)\right)\right\}dF_j(t)$ corresponds to the probability that module m_k fails in $[t,t+dt]$ and so can be written as $d\mathbf{F}_k(t)$.

Therefore, by applying Definition 4.1.2, it follows that

$$\sum_{j\in m_k}I_{\psi}^{B-P}\left(i,\overline{\mathbf{F}}(t)\right)=\int_0^{\infty}\left\{h_{\psi}\left(\mathbf{1}_k,\overline{\mathbf{F}}(t)\right)-h_{\psi}\left(\mathbf{0}_k,\overline{\mathbf{F}}(t)\right)\right\}d\mathbf{F}_k(t)=I_{\psi}^{B-P}\left(k,\overline{\mathbf{F}}(t)\right).$$

For our audio playback system, we have that $h_{\psi}\left(1_3,\overline{\mathbf{F}}(t)\right)=\overline{F}_1(t)\overline{F}_2(t)=e^{-(\lambda_1+\lambda_2)R(t)}$ $h_{\psi}\left(0_3,\overline{\mathbf{F}}(t)\right)=0$, $h_{\phi_3}\left(1_3,\overline{\mathbf{F}}(t)\right)=1$ and $h_{\phi_3}\left(1_3,\overline{\mathbf{F}}(t)\right)=\overline{F}_4(t)=e^{-\lambda_4 R(t)}$ yielding $I_{\phi}^{B-P}\left(3,\overline{\mathbf{F}}(t)\right)=\lambda_3\left[\left(\lambda_1+\lambda_2+\lambda_3\right)^{-1}-\left(\lambda_1+\lambda_2+\lambda_3+\lambda_4\right)^{-1}\right]$ as before.

Furthermore, as $h_{\phi}\left(1_4,\overline{\mathbf{F}}(t)\right)=\overline{F}_1(t)\overline{F}_2(t)=e^{-(\lambda_1+\lambda_2)R(t)}$ and $h_{\phi}\left(0_3,\overline{\mathbf{F}}(t)\right)=\overline{F}_1(t)\overline{F}_2(t)F_3(t)=e^{-(\lambda_1+\lambda_2)R(t)}\left(1-e^{-\lambda_3 R(t)}\right)$ (4.1.6) yields

$$\begin{aligned}I_{\psi}^{B-P}\left(3,\overline{\mathbf{F}}(t)\right)&=I_{\phi}^{B-P}\left(3,\overline{\mathbf{F}}(t)\right)+I_{\phi}^{B-P}\left(4,\overline{\mathbf{F}}(t)\right)\\&=\lambda_3\left[\left(\lambda_1+\lambda_2+\lambda_3\right)^{-1}-\left(\lambda_1+\lambda_2+\lambda_3+\lambda_4\right)^{-1}\right]\\&\quad+\lambda_4\left[\left(\lambda_1+\lambda_2+\lambda_4\right)^{-1}-\left(\lambda_1+\lambda_2+\lambda_3+\lambda_4\right)^{-1}\right]\end{aligned}$$

With Theorem 4.1.5, Barlow and Proschan noted that, unlike Birnbaum's importance measure, the Barlow-Proschan reliability importance measure of component c_i in module m_k is not the product of the respective importance measures of module m_k and that of component c_i under the structure function ϕ_k of module m_k. This is a consequence of the fact that, for function $w(s)=u(s)v(s)$ where $s\in[a,b]$ and a and b are real numbers, we have that $\int_a^b w(s)ds$ does not necessarily equal $\int_a^b u(s)ds\int_a^b v(s)ds$.

Barlow and Proschan also developed methods of ranking components with their measure without necessarily calculating the numerical value of the measure. These results are given in Lemma 4.1.6, Lemma 4.1.7, Theorem 4.1.8 and Theorem 4.1.9.

Lemma 4.1.6:

If component c_i is in series (parallel) with the rest of the system, then $I_{\phi}^{B-P}\left(i,\overline{\mathbf{F}}(t)\right)$ is increasing (decreasing) in $F_i(t)$ and in $\overline{F}_j(t)$ where $j\neq i$ for all $j\in I$.

Proof:

Let c_i be in series with the rest of the system. Now $h_\phi\left(0_i, \overline{\mathbf{F}}(t)\right) = 0$ and, by (4.1.3), $I_\phi^{B-P}\left(i, \overline{\mathbf{F}}(t)\right) = \int_0^\infty h_\phi\left(1_i, \overline{\mathbf{F}}(t)\right) dF_i(t)$. By Lemma 2.1.16, we know that $h_\phi\left(1_i, \overline{\mathbf{F}}(t)\right)$ is increasing in each $\overline{F}_j(t)$ where $j \neq i$. It follows that $I_\phi^{B-P}\left(i, \overline{\mathbf{F}}(t)\right)$ is increasing in $\overline{F}_j(t)$ where $j \neq i$. Furthermore, by definition, we have that $F_i(t)$ increases as *t* increases and $h_\phi\left(1_i, \overline{\mathbf{F}}(t)\right)$ decreases as *t* increases since each $\overline{F}_j(t)$, $j \neq i$, decreases in *t*. It follows that $I_\phi^{B-P}\left(i, \overline{\mathbf{F}}(t)\right) = \int_0^\infty h_\phi\left(1_i, \overline{\mathbf{F}}(t)\right) dF_i(t)$ increases as $F_i(t)$ increases.

Let c_i be in parallel with the rest of the system, then $h_\phi\left(1_i, \overline{\mathbf{F}}(t)\right) = 1$ and $I_\phi^{B-P}\left(i, \overline{\mathbf{F}}(t)\right) = \int_0^\infty \left\{1 - h_\phi\left(0_i, \overline{\mathbf{F}}(t)\right)\right\} dF_i(t)$. As $h_\phi\left(0_i, \overline{\mathbf{F}}(t)\right)$ is increasing in each $\overline{F}_j(t)$ where $j \neq i$, $1 - h_\phi\left(0_i, \overline{\mathbf{F}}(t)\right)$ and hence $I_\phi^{B-P}\left(i, \overline{\mathbf{F}}(t)\right)$ is decreasing in each $\overline{F}_j(t)$ where $j \neq i$. As before, we know that $h_\phi\left(0_i, \overline{\mathbf{F}}(t)\right)$ decreases in t and so $I_\phi^{B-P}\left(i, \overline{\mathbf{F}}(t)\right) = \int_0^\infty \left\{1 - h_\phi\left(0_i, \overline{\mathbf{F}}(t)\right)\right\} dF_i(t)$ decreases as $F_i(t)$ increases.

Lemma 4.1.7:

If component c_i is in series (parallel) with the rest of the system and $F_j(t) = F(t)$ for all $j \in I$, then $I_\phi^{B-P}\left(i, \overline{\mathbf{F}}(t)\right) \geq I_\phi^{B-P}\left(j, \overline{\mathbf{F}}(t)\right)$ for $j \neq i$.

Proof:

Since each component's lifetime are independently and identically distributed, the Barlow-Proschan reliability importance of each component reduces down to the proportion of times each component causes system failure. For c_i being in series with the rest of the system, we know that for every permutation of component failures that lead to c_j causing system failure we can find a nearly equivalent permutation that leads to c_i causing system failure by interchanging the failures of

c_j and c_i in the permutation. Hence $I_\phi^{B-P}\left(i,\overline{\mathbf{F}}(t)\right) \geq I_\phi^{B-P}\left(j,\overline{\mathbf{F}}(t)\right)$ for $j \neq i$. For c_i being in parallel with the rest of the system, we know that for every permutation of component failures that lead to c_j causing system failure must include the failure of c_i. Thus we can find a nearly equivalent permutation that leads to c_i causing system failure by interchanging the failures of c_j and c_i in the permutation. The result follows immediately.

Theorem 4.1.8:

If component c_i is in series (parallel) with the rest of the system and $F_j(t) \geq F(t)$ for $t > 0, j \neq i$ and $j \in I$, then $I_\phi^{B-P}\left(i,\overline{\mathbf{F}}(t)\right) \geq I_\phi^{B-P}\left(j,\overline{\mathbf{F}}(t)\right)$ for $j \neq i$.

Proof:

Define $F^*(t) = \max_{i=1,2,\ldots,n-1,n}\left\{F_i(t)\right\}$ and $\overline{\mathbf{F}}^*(t) = \left(\overline{F}^*(t),\overline{F}^*(t),\ldots,\overline{F}^*(t),\overline{F}^*(t)\right)$. By Lemma 4.1.7, $I_\phi^{B-P}\left(i,\overline{\mathbf{F}}^*(t)\right) \geq I_\phi^{B-P}\left(j,\overline{\mathbf{F}}^*(t)\right)$ for $j \neq i$. Adjusting $\overline{\mathbf{F}}^*(t)$ repeatedly until $F_i(t) \geq F_j(t)$ for $t > 0, j \neq i$ and $j \in I$, and by applying Lemma 4.1.6 to each adjustment, our required result then follows.

Theorem 4.1.9: *Barlow-Proschan Reliability Importance under the proportional hazards case*

Under the proportional hazard rate case, we have:

i. Under a series system we have $I_\phi^{B-P}\left(i,\overline{\mathbf{F}}(t)\right) = \lambda_i \Big/ \sum_{j=1}^{n} \lambda_j$

ii. Under a parallel system we have

$$I_\phi^{B-P}\left(i,\overline{\mathbf{F}}(t)\right) = \lambda_i \left\{ \lambda_i^{-1} - \sum_{j \neq i} \left(\lambda_i + \lambda_j\right)^{-1} + \sum_{\substack{j<l \\ j,l \neq i}} \left(\lambda_i + \lambda_j + \lambda_l\right)^{-1} - \ldots \right.$$
$$\left. \ldots + (-1)^{n-1}\left(\lambda_1 + \lambda_2 + \ldots + \lambda_{n-1} + \lambda_n\right)^{-1} \right\}$$

iii. Under a system with structure function ϕ we have

$$I_{\phi}^{B-P}\left(i,\overline{\mathbf{F}}(t)\right)=\int_0^1\left\{h_{\phi}\left(1_i,\mathbf{r}(t)\right)-h_{\phi}\left(0_i,\mathbf{r}(t)\right)\right\}\lambda_i\,R'(t)\left\{r(t)\right\}^{\lambda_i}dt \quad \text{where}$$

$$\mathbf{r}(t)=\left(\left\{r(t)\right\}^{\lambda_1},\left\{r(t)\right\}^{\lambda_2},\ldots,\left\{r(t)\right\}^{\lambda_{n-1}},\left\{r(t)\right\}^{\lambda_n}\right)$$

Proof:

From Definition 2.4.1 we have that $\overline{F}_i(t)=\exp\left\{-\lambda_i R(t)\right\}$ for $i\in I$ and so $dF_i(t)=\lambda_i R'(t)\exp\left\{-\lambda_i R(t)\right\}dt=\lambda_i R'(t)\overline{F}_i(t)dt$. Condition iii follows immediately.

Under the series system, we have that $h_{\phi}\left(1_i,\overline{\mathbf{F}}(t)\right)=\prod_{j\neq i}\overline{F}_j(t)=\exp\left\{-\sum_{j\neq i}\lambda_j R(t)\right\}$

and $h_{\phi}\left(0_i,\overline{\mathbf{F}}(t)\right)=0$. Substituting into (4.1.3) yields

$$I_{\phi}^{B-P}\left(i,\overline{\mathbf{F}}(t)\right)=\int_0^{\infty}\lambda_i R'(t)\exp\left\{\sum_{j=1}^{n}\lambda_j R(t)\right\}dt$$

Integrating out leads to $I_{\phi}^{B-P}\left(i,\overline{\mathbf{F}}(t)\right)=\lambda_i\Big/\sum_{j=1}^{n}\lambda_j$.

Under the parallel system, $h_{\phi}\left(0_i,\overline{\mathbf{F}}(t)\right)=1-\prod_{j\neq i}F_j(t)=1-\prod_{j\neq i}\left(1-\exp\left\{\lambda_j R(t)\right\}\right)$

and $h_{\phi}\left(1_i,\overline{\mathbf{F}}(t)\right)=1$ and. Hence $I_{\phi}^{B-P}\left(i,\overline{\mathbf{F}}(t)\right)=\int_0^{\infty}\left\{1-h_{\phi}\left(0_i,\overline{\mathbf{F}}(t)\right)\right\}dF_i(t)$ with

$$\left\{1-h_{\phi}\left(0_i,\overline{\mathbf{F}}(t)\right)\right\}dF_i(t)=\lambda_i\left[\exp\left\{-\lambda_i R(t)\right\}-\sum_{j\neq i}\exp\left\{-\left(\lambda_i+\lambda_j\right)R(t)\right\}+\right.$$

$$\left.+\sum_{\substack{j<l\\ j,l\neq i}}\exp\left\{-\left(\lambda_i+\lambda_j+\lambda_l\right)R(t)\right\}-\ldots+(-1)^{n-1}\exp\left(-\sum_{j=1}^{n}\lambda_j R(t)\right)\right]$$

Integrating out with respect to *t* yields the required result.

Note that in both cases of integration, we used the fact that $\lim_{t\to 0}\lambda_i R(t)=0$ and $\lim_{t\to\infty}\lambda_i R(t)=\infty$.

Barlow and Proschan then went on to define a structural importance measure.

Definition 4.1.10: *Barlow – Proschan Structural Importance*

For $F_j(t) = p$ where $j = 1,2,\ldots,n-1,n$, $0 \le p \le 1$ and $\mathbf{p} = (p,p,\ldots,p,p)$, we define the Barlow – Proschan structural importance for component c_i under structure function ϕ, denoted $I_\phi^{B-P}(i)$, as:

$$I_\phi^{B-P}(i) = \int_0^1 \left\{h_\phi(1_i,\mathbf{p}) - h_\phi(0_i,\mathbf{p})\right\} dp \qquad (4.1.7)$$

For our audio playback system, we have that $h_\phi(1_2,\mathbf{p}) = p(1-q^2)$, $h_\phi(0_2,\mathbf{p}) = 0$, $h_\phi(1_3,\mathbf{p}) = p^2$ and $h_\phi(0_3,\mathbf{p}) = p^3$, we obtain from (4.1.7)

$I_\phi^{B-P}(2) = \int_0^\infty p(1-q^2)dp = \frac{5}{12}$ and $I_\phi^{B-P}(2) = \int_0^\infty p^2 - p^3 dp = \frac{1}{12}$.

As in the case of Birnbaum's structural importance, Barlow and Proschan realised that their structural importance measure is not only definable in terms a system's availability function. They sought to express their structural measure in terms of critical path vectors (sets), as they did in Theorem 4.1.15.

Letting **x** be a critical state vector for ϕ, we have, by Definition 2.1.21, that $(1_i,\mathbf{x})$ is a critical path vector for component c_i. Barlow and Proschan defined the size of $(1_i,\mathbf{x})$ to be the number of functioning components in $(1_i,\mathbf{x})$. Thus $(1_i,\mathbf{x})$ is said to have size r if $\sum_{j\neq i} x_j = r-1$. Barlow and Proschan then defined ${}^\phi n_r^P(i)$ as follows:

Definition 4.1.11: ${}^\phi n_r^P(i)$

Let $(1_i,\mathbf{x})$ be a critical path vector. The number of critical path vectors for component c_i of size r, denoted by ${}^\phi n_r^P(i)$, is given by:

$${}^\phi n_r^P(i) = \sum_{\left\{\mathbf{x}:\sum_{j\neq i} x_j = r-1\right\}} \left\{\phi(1_i,\mathbf{x}) - \phi(0_i,\mathbf{x})\right\} \qquad (4.1.8)$$

Theorem 4.1.12:

$$I_{\phi}^{B-P}(i) = \sum_{r=1}^{n} \frac{(r-1)!(n-r)!}{n!} \; {}^{\phi}n_r^P(i) \qquad (4.1.9)$$

Proof:

By (2.1.5) and Definition 4.9, we have for $\mathbf{p} = (p, p, \ldots, p, p)$:

$$\begin{aligned} h_{\phi}(1_i, \mathbf{p}) - h_{\phi}(0_i, \mathbf{p}) &= E\left[\phi(1_i, \mathbf{p}) - \phi(0_i, \mathbf{p}) \,|\, \mathbf{p}\right] \\ &= \sum_{\{\mathbf{x}\}} \left\{\phi(1_i, \mathbf{x}) - \phi(0_i, \mathbf{x})\right\} p^{\sum_{j \neq i} x_j} q^{\sum_{j \neq i} \bar{x}_j} \\ &= \sum_{r=1}^{n} {}^{\phi}n_r^P(i) p^{r-1} q^{n-r} \end{aligned}$$

Thus (4.1.7) becomes $I_{\phi}^{B-P}(i) = \int_0^1 \sum_{r=1}^{n} {}^{\phi}n_r^P(i) p^{r-1} q^{n-r} \, dp = \sum_{r=1}^{n} \frac{(r-1)!(n-r!)}{n!} {}^{\phi}n_r^P(i)$.

From (4.1.9), Barlow and Proschan noted an interesting interpretation for their structural measure by re-writing the equation as:

$$I_{\phi}^{B-P}(i) = \tfrac{1}{n} \sum_{r=1}^{n} {}^{\phi}n_r^P(i) \Big/ \binom{n-1}{r-1} \qquad (4.1.10)$$

The denominator $\binom{n-1}{r-1}$ represents the number of ways in which $r-1$ functioning components can be chosen from among the $n-1$ components, excluding component c_i. Thus (4.1.10) can be seen as the average probability of selecting a critical path vector for component c_i from all state vectors of the same size in terms of functioning components, excluding c_i. The probability is calculated assuming that each state vector is equally likely to occur and the average is taken across the size of the critical path vectors.

Another appealing analysis by Barlow and Proschan is suggested from the proof of Theorem 4.1.12. We have that

$$I_{\phi}^{B-P}(i) = \int_0^1 \tfrac{1}{n} \sum_{r=1}^{n} \binom{n-1}{r-1} p^{r-1} q^{n-r} \; {}^{\phi}n_r^P(i) \Big/ \binom{n-1}{r-1} dp \qquad (4.1.11)$$

The term $\binom{n-1}{r-1}p^{r-1}q^{n-r}$ describes the probability that $r-1$ of the $n-1$ components, excluding component c_i, are functioning. Thus the integrand represents the probability that component c_i causes system failure and the integral then corresponds to assuming that p is uniformly distributed over the interval $[0,1]$.

Barlow and Proschan also allude to the fact that the above examination of Barlow-Proschan structural importance can be done under critical cut vectors (sets).

Letting **x** be a critical state vector for ϕ, we have, by Definition 2.1.22, that $(0_i, \mathbf{x})$ is a critical cut vector for component c_i. Accordingly, the size of $(0_i, \mathbf{x})$ is the number of failed components in $(0_i, \mathbf{x})$. Thus $(0_i, \mathbf{x})$ is said to have size *r* if $\sum_{j \neq i} \bar{x}_j = r-1$. Barlow and Proschan then defined ${}^{\phi}n_r^C(i)$ as follows:

Definition 4.1.13: ${}^{\phi}n_r^C(i)$

Let $(0_i, \mathbf{x})$ be a critical path vector. The number of critical cut vectors for component c_i of size *r*, denoted by ${}^{\phi}n_r^C(i)$, is given by:

$$ {}^{\phi}n_r^C(i) = \sum_{\left\{\mathbf{x}:\sum_{j\neq i}\bar{x}_j = r-1\right\}} \left\{\phi(1_i, \mathbf{x}) - \phi(0_i, \mathbf{x})\right\} \qquad (4.1.12) $$

Theorem 4.1.14:

$$ {}^{\phi}n_r^C(i) = {}^{\phi}n_{n-r+1}^P(i) \qquad (4.1.13) $$

Proof:

By observing that $\left\{\mathbf{x}:\sum_{j\neq i}\bar{x}_j = r-1\right\} \equiv \left\{\mathbf{x}:\sum_{j\neq i}x_j = n-r+1\right\}$, (4.11) follows from (4.1.8).

Thus by defining $k = n - r + 1$ in (4.1.9), (4.1.10) and (4.1.11), we attain:

$$I_{\phi}^{B-P}(i) = \sum_{k=1}^{n} \frac{(k-1)!(n-k)!}{n!} \, {}^{\phi}n_k^C(i) \tag{4.1.14}$$

$$I_{\phi}^{B-P}(i) = \tfrac{1}{n} \sum_{k=1}^{n} {}^{\phi}n_k^C(i) \Big/ \binom{n-1}{k-1} \tag{4.1.15}$$

$$I_{\phi}^{B-P}(i) = \int_0^1 \tfrac{1}{n} \sum_{k=1}^{n} \binom{n-1}{k-1} p^{k-1} q^{n-k} \, {}^{\phi}n_k^C(i) \Big/ \binom{n-1}{k-1} dp \tag{4.1.16}$$

The interpretations of (4.1.14), (4.1.15) and (4.1.16) follow analogously from (4.1.9), (4.1.10) and (4.1.11) respectively.

Barlow and Proschan also compared their importance measures to that of Birnbaum's measures.

Theorem 4.1.15: *Birnbaum's Importance in terms of* ${}^{\phi}n_r^P(i)$ *and* ${}^{\phi}n_r^C(i)$

$$I_{\phi}^{B}(i) = \sum_{r=1}^{n} {}^{\phi}n_r^P(i)/2^{n-1} = \sum_{r=1}^{n} {}^{\phi}n_r^C(i)/2^{n-1} \tag{4.1.17}$$

Proof:

By (4.1.13), it is sufficient to show $I_{\phi}^{B}(i) = \sum_{r=1}^{n} {}^{\phi}n_r^P(i)/2^{n-1}$.

From (3.1.1) and (2.1.4), $I_{\phi}^{B}(i) = 2^{-n} \sum_{all\ \mathbf{x}} \{\phi(1_i, \mathbf{x}) - \phi(0_i, \mathbf{x})\}$. Now, for each state vector $\mathbf{x}$ where $x_i = 1$ and $\delta_i(\phi, \mathbf{x}) = 1$, there corresponds another state vector $\mathbf{x}^*$ such that $x_i = 0$ and $\delta_i(\phi, \mathbf{x}^*) = 1$. In fact, we have $\mathbf{x} = (1_i, \mathbf{x}^*)$. Thus,

$$I_{\phi}^{B}(i) = 2^{-n} \left\{ 2 \sum_{r=1}^{n} \sum_{\left\{\mathbf{x}: \sum_{j \neq i} x_j = r-1\right\}} \{\phi(1_i, \mathbf{x}) - \phi(0_i, \mathbf{x})\} \right\} = 2^{n-1} \sum_{r=1}^{n} {}^{\phi}n_r^P(i)$$

Comparing (4.1.17) to (4.1.9), Birnbaum's structural importance attach a common weight 2^{n-1} to each ${}^{\phi}n_r^P(i)$ whilst Barlow-Proschan's structural importance

attaches weight $(r-1)!(n-r)!/n!$, which increases for $r \geq n/2$ and decreases for $n/2 \leq r$ and thereby attaching greater weight to critical path and cut sets which are very small.

Barlow and Proschan also found that their structural measure could be expressed in terms of Birnbaum's reliability importance measure.

Corollary 4.1.16: *Barlow-Proschan Importance in terms of Birnbaum Reliability Importance*

For $\mathbf{p} = (p, p, \ldots, p, p)$:

$$I_{\phi}^{B-P}(i) = \int_0^1 I_{\phi}^{B}(i, \mathbf{p})\, dp \qquad (4.1.17)$$

Proof:

From (3.1.5) and (4.1.7), the proof follows immediately.

Therefore, Barlow-Proschan structural importance is the average Birnbaum reliability importance taken across all values of p, where these values are uniformly distributed over the interval $[0,1]$.

Consequently, if p should not be uniformly distributed, new structural measures can be defined.

Definition 4.1.17: *Generalised Barlow-Proschan Structural Importance*

Let $\mathbf{p} = (p, p, \ldots, p, p)$, $0 \leq p \leq 1$ and let $F(p)$ be the cumulative distribution function of **p**, then the generalised Barlow-Proschan structural importance for component c_i, denoted by $I_{\phi}^{GB-P}(i, F(p))$, is given by:

$$I_{\phi}^{GB-P}(i, F(p)) = \int_0^1 I_{\phi}^{B}(i, \mathbf{p})\, dF(p) \qquad (4.1.18)$$

Corollary 4.1.18:

Let $\mathbf{p} = (p, p, \ldots, p, p)$ and $0 \le p \le 1$. For $F(p) = p$, the generalised Barlow-Proschan structural importance for component c_i reduces down to the Barlow-Proschan structural importance for component c_i. Also, the generalised Barlow-Proschan structural importance for component c_i reduces down to Birnbaum's structural importance for component c_i when

$$F(p) = \begin{cases} 1 & \text{for } \frac{1}{2} \le p \le 1 \\ 0 & \text{otherwise} \end{cases}$$

Proof:

Let $F(p) = p$ then $dF(p) = dp$ and, by (4.1.18) and (4.1.17) $I_\phi^{G\,B-P}(i) = I_\phi^{B-P}(i)$.

Let $F(p) = 1$ for $\frac{1}{2} \le p \le 1$ and $F(p) = 0$ elsewhere. By definition, $F(p)$ is a heavy side function and accordingly $dF(p)$ is a Dirac Delta function at $p = \frac{1}{2}$ i.e. $dF(p) = \delta(p - \frac{1}{2}) = \lim_{h \to 0} \frac{1}{h}$ for $\frac{1}{2} - \frac{1}{2}h \le p \le \frac{1}{2} + \frac{1}{2}h$ and $dF(p) = 0$ elsewhere. Thus from (4.1.18), (3.1.5) and (3.1.10), $I_\phi^{G\,B-P}(i,p) = \int_{\frac{1}{2}-\frac{1}{2}h}^{\frac{1}{2}+\frac{1}{2}h} I_\phi^B(i,\mathbf{p})\,\delta(p - \frac{1}{2})\,dp = I_\phi^B(i)$.

In the case of a series system, Barlow and Proschan showed that the normalisation property of importance measures must lead to the generalised Barlow-Proschan structural importance, $I_\phi^{G\,B-P}(i, F(p))$, coinciding with the Barlow-Proschan structural importance, $I_\phi^{B-P}(i)$.

Theorem 4.1.19: *Coincidence of* $I_\phi^{G\,B-P}(i, F(p))$ *and* $I_\phi^{B-P}(i)$

Let $I_\phi^{G\,B-P}(i, F(p))$ satisfy $\sum_{j=1}^{n} I_\phi^{G\,B-P}(j, F(p)) = 1$ for a series system of size n, then $I_\phi^{G\,B-P}(i, F(p)) \equiv I_\phi^{B-P}(i)$.

Proof:

For a series system, we have $\phi(\mathbf{x}) = \prod_{i=1}^{n} x_i$ and, by (2.1.5) and (3.1.5), $I_{\phi}^{B}(j,\mathbf{p}) = p^{n-1}$ for $j = 1,2,\ldots,n-1,n$ and $\mathbf{p} = (p,p,\ldots,p,p)$. It follows that (4.1.18) is constant with respect to j and, by assumption, $\int_0^1 np^{n-1}\,dF(p) = 1$, and by the solution of the Hamburger moment problem by Shohat and Tamarkin [27], we have $F(p) = p$. By Corollary 4.1.18, the proof is complete.

We can also define the generalised Barlow-Proschan structural importance under the dual System.

Theorem 4.1.20: *Generalised Barlow-Proschan Structural Importance under the Dual System*

$$I_{\phi^D}^{GB-P}(i,\overline{F}(p)) = I_{\phi}^{GB-P}(i,F(p))$$

Proof:

The result follows directly from (4.1.18) and (3.1.9).

We now relax the condition on component repairs i.e. suppose that component repairs are now permissible. We shall assume that component repairs will follow a "as good as new" replacement policy (defined in Definition 2.4.3)

As in Chapter 2, we will let T_i denote the lifetime of component c_i with cumulative distribution function $F_i(t)$ and let D_i, with cumulative distribution function $G_i(t)$, denote the repair time taken to replace component c_i once it has be found to have failed. Here, each repair time is independently and identically distributed. Furthermore, we know that T_i and D_i have means μ_i and ν_i respectively. It follows that the random variable $T_i + D_i$, the complete lifetime (including repair time) of one single failed component c_i follows an alternating

renewal process governed by cumulative distribution function $H_i(t)$ and with renewal functions $M_i^F(t)$ and $M_i^R(t)$ respectively.

Proposition 4.1.21:

The availability of component c_i follows the integral equation

$A_i(t) = \overline{F}_i(t) + \int_0^t \overline{F}_i(t-u)\,dM_i^R(u)$ with $A_i = \mu_i/(\mu_i + \nu_i)$

Proof:

The term $S^F_{N_i^F(t)} = S^R_{N_i^R(t)-1} + T_i$ signifies the time at which the current functioning component c_i will fail, and hence $A_i(t) = \Pr\left[S^R_{N_i^R(t)-1} + T_i > t\right]$. For $N_i^R(t) - 1 = n$ and $u \in [0,t]$ being fixed, we have $\Pr\left[S_n^R + T_i > t\right] = \Pr[T_i > t-u]\Pr[S_n = u]$. Integrating over all values of u yields $\Pr\left[S_n^R + T_i > t\right] = \overline{F}_i(t)$ for $n = 0$ and $\Pr[S_n + T_i > t] = \int_0^t \overline{F}_i(t-u)\,d\left(H^R\right)^{(n)}(u)$. Summing over all possible values of n and using (2.5.9) we obtain $A_i(t) = \overline{F}_i(t) + \int_0^t \overline{F}_i(t-u)\,dM_i^R(u)$. By using the key renewal theorem, we have that $\int_0^t \overline{F}_i(t-u)\,dM_i^R(u) \to \frac{1}{\mu_i + \nu_i}\int_0^\infty \overline{F}_i(u)\,du = \frac{\mu_i}{\mu_i + \nu_i}$ as $t \to \infty$. Seeing that $\overline{F}_i(t) \to 0$ as $t \to \infty$, we have $A_i = \mu_i/(\mu_i + \nu_i)$.

We can now formulate Barlow-Proschan Importance for component c_i.

Proposition 4.1.22:

The probability that c_i causes system failure at time *t*, given that the system fails at time *t*, is:

$$\frac{\left\{h_\phi(1_i, \mathbf{A}(t)) - h_\phi(0_i, \mathbf{A}(t))\right\} dM_i^F(t)}{\sum_{j=1}^{n}\left\{h_\phi(1_j, \mathbf{A}(t)) - h_\phi(0_j, \mathbf{A}(t))\right\} dM_j^F(t)} \qquad (4.1.19)$$

Proof:

Consider the time interval $[t, t+dt]$ and define dt such that, at most, only one component can fail in $[t, t+dt]$. By (2.1.4) and the fact that ϕ is a binary valued function, the probability that the system is functioning if c_i is functioning at time t and is failed otherwise is $\Pr[\delta_i(\phi, \mathbf{x}(t)) = 1] = h_\phi(1_i, \mathbf{A}(t)) - h_\phi(0_i, \mathbf{A}(t))$. Also, by the renewal density function, the probability that the failure of c_i occurs in $[t, t+dt]$ is approximately $m_i^F(t)dt$.

Therefore, $\{h_\phi(1_i, \mathbf{A}(t)) - h_\phi(0_i, \mathbf{A}(t))\} dM_i^F(t)$ expresses the probability that c_i causes system failure in $[t, t+dt]$. Hence, $\sum_{j=1}^{n} \{h_\phi(1_j, \mathbf{A}(t)) - h_\phi(0_j, \mathbf{A}(t))\} dM_j^F(t)$ is the probability that system failure occurs in $[t, t+dt]$. As dt is chosen arbitrarily, (4.1.19) now follows.

By letting $t \to \infty$ in (4.1.19), Barlow and Proschan defined their importance measure as the stationery probability that component c_i causes system failure given that the system failure occurs. By applying the renewal density theorem and Proposition 4.1.22 to (4.1.19) we have:

Definition 4.1.23: *Barlow-Proschan Reliability Importance under Component Repairs*

The Barlow-Proschan reliability importance under component repairs, denoted $I_\phi^{B-P}(i, \mathbf{A})$, of component c_i is:

$$I_\phi^{B-P}(i, \mathbf{A}) = \frac{\left(h_\phi(1_i, \mathbf{A}) - h_\phi(0_i, \mathbf{A})\right)/(\mu_i + \nu_i)}{\sum_{j=1}^{n} \left(h_\phi(1_j, \mathbf{A}) - h_\phi(0_j, \mathbf{A})\right)/(\mu_j + \nu_j)} \qquad (4.1.20)$$

where $\mathbf{A} = (A_1, A_2, \ldots, A_{n-1}, A_n)$.

As with the usual Barlow-Proschan reliability importance, we have that $\sum_{i=1}^{n} I_\phi^{B-P}(i, \mathbf{A}) = 1$.

Under the dual system we have

Corollary 4.1.24: *Barlow-Proschan Reliability Importance under Component Repairs and the Dual System*

We have that $I_{\phi^D}^{B-P}(i,\overline{\mathbf{A}}) = I_{\phi}^{B-P}(i,\mathbf{A})$ where $\overline{\mathbf{A}} = (\overline{A}_1, \overline{A}_2, \ldots, \overline{A}_{n-1}, \overline{A}_n)$ and $\overline{A}_i = 1 - A_i = \nu_i/(\mu_i + \nu_i)$

Proof:

The result follows directly from (4.1.20) and (3.1.9).

Theorem 4.1.24:

i. For a series system, we have that $I_{\phi}^{B-P}(i,\mathbf{A}) = \prod_{j\neq i}\mu_j \Big/ \sum_{i=1}^{n}\prod_{j\neq i}\mu_j$ i.e. component importance does not depend on the mean repair times of components.

ii. For a parallel system, we have $I_{\phi}^{B-P}(i,\mathbf{A}) = \prod_{j\neq i}\nu_j \Big/ \sum_{i=1}^{n}\prod_{j\neq i}\nu_j$ i.e. component importance does not depend on the mean lifetime of components.

Proof:

We know that $A_i = \mu_i/(\mu_i + \nu_i)$ for $i \in I$. For a series system we have that

$$h_{\phi}(1_i,\mathbf{A}) = \prod_{j\neq i} A_j = \prod_{j\neq i}\mu_j/(\mu_j + \nu_j) \text{ and } h_{\phi}(0_i,\mathbf{A}) = 0.$$

Thus

$$I_{\phi}^{B-P}(i,\mathbf{A}) = \frac{\prod_{j\neq i}\mu_j \Big/ \prod_{j=1}^{n}(\mu_j + \nu_j)}{\sum_{i=1}^{n}\prod_{j\neq i}\mu_j \Big/ \prod_{j=1}^{n}(\mu_j + \nu_j)} = \prod_{j\neq i}\mu_j \Big/ \sum_{i=1}^{n}\prod_{j\neq i}\mu_j .$$

For a parallel system we have that

$$h_\phi(1_i,\mathbf{A})=1 \text{ and } h_\phi(0_i,\mathbf{A})=1-\prod_{j\neq i}\left(1-A_j\right)=1-\prod_{j\neq i}\nu_j/\left(\mu_j+\nu_j\right)$$

Hence

$$I_\phi^{B-P}(i,\mathbf{A})=\frac{\prod_{j\neq i}\nu_j\Big/\prod_{j=1}^{n}\left(\mu_j+\nu_j\right)}{\sum_{i=1}^{n}\prod_{j\neq i}\nu_j\Big/\prod_{j=1}^{n}\left(\mu_j+\nu_j\right)}=\prod_{j\neq i}\nu_j\Big/\sum_{i=1}^{n}\prod_{j\neq i}\nu_j$$

Finally an alternative definition for the Barlow – Proschan reliability is given below:

Theorem 4.1.26: *Alternative Definition of Barlow-Proschan Reliability Importance*

If $\widetilde{N}_i(t)$ denotes the number of times during the time interval $[0,t]$ that component c_i causes system failure, then

$$I_\phi^{B-P}(i,\mathbf{A})=\lim_{t\to 0}\frac{E\left[\widetilde{N}_i(t)\right]}{\sum_{j=1}^{n}E\left[\widetilde{N}_j(t)\right]} \tag{4.1.21}$$

where $E\left[\widetilde{N}_i(t)\right]=\int_0^t\left\{h_\phi(1_i,\mathbf{A}(u))-h_\phi(0_i,\mathbf{A}(u))\right\}dM_i^F(u)$.

Proof:

From Proposition 4.1.22, $\left\{h_\phi(1_i,\mathbf{A}(u))-h_\phi(0_i,\mathbf{A}(u))\right\}dM_i^F(u)$ represents the probability that component c_i causes system failure over the time interval $[u,u+du]$. Integrating over $[0,t]$ yields the probability that c_i causes system failure over $[0,t]$. Furthermore, the failure of c_i is a binary random variable in terms of the failure of the system and hence integrating over $[0,t]$ yields the expected number of times during $[0,t]$ that c_i causes system failure i.e. $E\left[\widetilde{N}_i(t)\right]$.

Consider $\lim_{t\to 0}\frac{1}{t}\int_0^t\left\{h_\phi(1_i,\mathbf{A}(u))-h_\phi(0_i,\mathbf{A}(u))\right\}dM_i^F(u)$. Defining the function $g(t)=h_\phi(1_i,\mathbf{A}(t))-h_\phi(0_i,\mathbf{A}(t))$, we have that $g(t)$ is a real valued function

bounded on finite intervals with $\lim_{t\to\infty} g(t) = h_\phi(1_i, \mathbf{A}) - h_\phi(0_i, \mathbf{A})$. Thus, by Proposition 2.5.12, $\lim_{t\to\infty} E\left[\widetilde{N}_i(t)\right]/t = \left\{h_\phi(1_i, \mathbf{A}) - h_\phi(1_i, \mathbf{A})\right\}/(\mu_i + \nu_i)$. (4.1.21) follows from observing that

$$\frac{E\left[\widetilde{N}_i(t)\right]}{\sum_{j=1}^{n} E\left[\widetilde{N}_j(t)\right]} = \frac{E\left[\widetilde{N}_i(t)\right]/t}{\sum_{j=1}^{n} E\left[\widetilde{N}_j(t)\right]/t}$$

4.2 Minimal Cut Set and Minimal Path Set Importance

As minimal cut vectors are the only state vectors to causes system failure, Barlow and Proschan extended their importance measures in order to measure the importance that each minimal cut set has in the functioning of a system.

As in the case of components and modules, Barlow and Proschan defined the importance of a minimal cut set to be the probability that the failure of the minimal cut set coincides, or causes, system failure. More formally,

Proposition 4.2.1:

The probability that the failure of the jth minimal cut set ${}^{\phi}CS_j^m$ coincides, or causes, system failure is given by the equation:

$$\sum_{k\in {}^{\phi}CS_j^m} \int_0^\infty h_\phi\left(1_k, \mathbf{0}^{{}^{\phi}CS_j^m\setminus\{k\}}, \overline{\mathbf{F}}(t)\right) \prod_{l\in {}^{\phi}CS_j^m\setminus\{k\}} F_l(t)\, dF_k(t)$$

Proof:

As each component is independent, the term $\prod_{l\in {}^{\phi}CS_j^m\setminus\{k\}} F_l(t)\, dF_k(t)$ represents the probability that component c_k of the jth minimal cut set ${}^{\phi}CS_j^m$ fails at time t whilst the remaining components of ${}^{\phi}CS_j^m$ are already failed. Since $h_\phi\left(0_k, \mathbf{0}^{{}^{\phi}CS_j^m\setminus\{k\}}, \overline{\mathbf{F}}(t)\right) = 0$, we have that $h_\phi\left(1_k, \mathbf{0}^{{}^{\phi}CS_j^m\setminus\{k\}}, \overline{\mathbf{F}}(t)\right)$ represents the probability that c_k is critical at time t, i.e. the system is functioning so long as c_k

is functioning. Thus the integral corresponds to the probability that component c_k causes system failure. Summing over all the constituent components of ${}^{\phi}CS_j^m$ yields the probability that ${}^{\phi}CS_j^m$ causes system failure.

Definition 4.2.2: *Minimal Cut Set Reliability Importance*

The importance of jth minimal cut set ${}^{\phi}CS_j^m$, denoted $I_{\phi}^{MCS}\left(j,\overline{\mathbf{F}}(t)\right)$, is given by

$$I_{\phi}^{MCS}\left(j,\overline{\mathbf{F}}(t)\right)=\sum_{k\in {}^{\phi}CS_j^m}\int_0^{\infty}h_{\phi}\left(1_k,\mathbf{0}^{{}^{\phi}CS_j^m\setminus\{k\}},\overline{\mathbf{F}}(t)\right)\prod_{l\in {}^{\phi}CS_j^m\setminus\{k\}}F_l(t)\,dF_k(t) \qquad (4.2.1)$$

As in the case of Barlow-Proschan structural importance, we have

Definition 4.2.3: *Minimal Cut Set Structural Importance*

For $\overline{F}_j(t)=p$ where $j=1,2,\ldots,n-1,n$, $0\le p\le 1$ and $\mathbf{p}=(p,p,\ldots,p,p)$, we define the minimal cut set structural importance for the jth minimal cut set ${}^{\phi}CS_j^m$, denoted $I_{\phi}^{MCS}(j)$, as:

$$I_{\phi}^{MCS}(j)=\sum_{k\in {}^{\phi}CS_j^m}\int_0^{\infty}h_{\phi}\left(1_k,\mathbf{0}^{{}^{\phi}CS_j^m\setminus\{k\}},\mathbf{p}\right)(1-p)^{{}^{\phi}r_j^C-1}dp \qquad (4.2.2)$$

where ${}^{\phi}r_j^C$ denotes the number of component in ${}^{\phi}CS_j^m$.

Also, it follows that minimal cut set structural importance can be determined by calculating the number of component failure sequences that leads to ${}^{\phi}CS_j^m$ causing system failure and dividing this by the total number of such sequences.

Theorem 4.2.4:

Let minimal cut set ${}^{\phi}CS_{j_1}^m$ and ${}^{\phi}CS_{j_2}^m$ consist of ${}^{\phi}r_{j_1}^C$ and ${}^{\phi}r_{j_2}^C$ components, where ${}^{\phi}r_{j_1}^C<{}^{\phi}r_{j_2}^C$. If all the constituent components in ${}^{\phi}CS_{j_1}^m$ do not belong to any other minimal cut set, then $I_{\phi}^{MCS}(j_1)>I_{\phi}^{MCS}(j_2)$.

Proof:

For any sequence of component failure for which minimal cut set ${}^{\phi}CS_{j_2}^{m}$ causes system failure, we will show that a corresponding sequence of component failure exists for which minimal cut set ${}^{\phi}CS_{j_1}^{m}$ causes system failure. Moreover, these sequences of component failure will be distinct from each other in terms of their constituent components. For a sequence of r components failures, $r \geq {}^{\phi}r_{j_2}^{C}$ for which ${}^{\phi}CS_{j_2}^{m}$ causes system failure, exchange the first r_{j_1} failures with the failure of each constituent component of ${}^{\phi}CS_{j_1}^{m}$. As no other minimal cut set contains any of the components in ${}^{\phi}CS_{j_1}^{m}$, ${}^{\phi}CS_{j_1}^{m}$ causes system failure. Furthermore, as the components of ${}^{\phi}CS_{j_1}^{m}$ do not belong to any other minimal cut set, the generated failure sequences must be distinct. By the alternative definition of minimal cut set structural importance, our required result follows.

As each minimal cut set under ϕ is a minimal path set under the dual structure function under ϕ^{D}, Barlow and Proschan also defined a minimal path set importance measure analogous to the minimal cut set importance measure.

Proposition 4.2.5:

The probability that the failure of the jth minimal path set ${}^{\phi}PS_{j}^{m}$ coincides, or causes, system failure is given by the equation:

$$\sum_{k \in {}^{\phi}PS_{j}^{m}} \int_{0}^{\infty} \left\{ 1 - h_{\phi}\left(0_k, \mathbf{1}^{{}^{\phi}PS_{j}^{m} \setminus \{k\}}, \overline{\mathbf{F}}(t)\right) \right\} \prod_{l \in {}^{\phi}PS_{j}^{m} \setminus \{k\}} \overline{F}_l(t)\, dF_k(t)$$

Proof:

As each component is independent, the term $\prod_{l \in {}^{\phi}PS_{j}^{m} \setminus \{k\}} \overline{F}_l(t)\, dF_k(t)$ represents the probability that component c_k of the jth minimal path set ${}^{\phi}PS_{j}^{m}$ fails at time t while the remaining components of ${}^{\phi}PS_{j}^{m}$ are in a functioning state. Since

$h_\phi\left(1_k, \mathbf{1}^{{}^\phi PS_j^m \setminus \{k\}}, \overline{\mathbf{F}}(t)\right) = 1$, we have that $1 - h_\phi\left(0_k, \mathbf{1}^{{}^\phi PS_j^m \setminus \{k\}}, \overline{\mathbf{F}}(t)\right)$ represents the probability that c_k is critical at time *t*, i.e. the system is functioning so long as c_k is functioning. Thus the integral corresponds to the probability that component c_k causes system failure. Summing over all the constituent components of ${}^\phi PS_j^m$ yields the probability that the failure of ${}^\phi PS_j^m$ causes system failure.

Definition 4.2.6: *Minimal Path Set Reliability Importance*

The importance of jth minimal path set ${}^\phi PS_j^m$, denoted $I_\phi^{MPS}\left(j, \overline{\mathbf{F}}(t)\right)$, is given by

$$I_\phi^{MPS}\left(j, \overline{\mathbf{F}}(t)\right) = \sum_{k \in {}^\phi PS_j^m} \int_0^\infty \left\{1 - h_\phi\left(0_k, \mathbf{1}^{{}^\phi PS_j^m \setminus \{k\}}, \overline{\mathbf{F}}(t)\right)\right\} \prod_{l \in {}^\phi PS_j^m \setminus \{k\}} \overline{F}_l(t) dF_k(t) \quad (4.2.3)$$

Just as Definition 4.2.3 follows on from Definition 4.2.2, we have Definition 4.2.7 following on from Definition 4.2.6:

Definition 4.2.7: *Minimal Path Set Structural Importance*

For $F_j(t) = p$ where $j = 1,2,\ldots,n-1,n$, $0 \le p \le 1$ and $\mathbf{p} = (p, p, \ldots, p, p)$, we define the minimal path set structural importance for the jth minimal path set ${}^\phi PS_j^m$, denoted $I_\phi^{MPS}(j)$, as

$$I_\phi^{MPS}(j) = \sum_{k \in {}^\phi PS_j^m} \int_0^\infty \left\{1 - h_\phi\left(0_k, \mathbf{1}^{{}^\phi PS_j^m \setminus \{k\}}, \mathbf{p}\right)\right\} p^{{}^\phi r_j^P - 1} dp \quad (4.2.4)$$

where ${}^\phi r_j^P$ denotes the number of components in ${}^\phi PS_j^m$.

Considering the dual system allows us to find a relationship between the minimal cut set and minimal path set importance measures.

Theorem 4.2.8: *Minimal Cut Set Reliability Importance under the Dual System*

i. $I_{\phi^D}^{MCS}(j,\mathbf{F}(t)) = I_{\phi}^{MPS}(j,\mathbf{F}(t))$ (4.2.5)

ii. $I_{\phi^D}^{MCS}(j) = I_{\phi}^{MPS}(j)$ (4.2.6)

Proof:

(4.2.5) and (4.2.6) follow by applying Lemma 2.3.6 and (2.3.3) on (4.2.1) and (4.2.2) respectively

As before, it follows that minimal path set structural importance can be determined by calculating the number of component failure sequences that leads to ${}^{\phi}PS_j^m$ causing system failure and dividing this by the total number of such sequences.

Theorem 4.2.9:

Let minimal path set ${}^{\phi}PS_{j_1}^m$ and ${}^{\phi}PS_{j_2}^m$ consist of ${}^{\phi}r_{j_1}^P$ and ${}^{\phi}r_{j_2}^P$ components, where ${}^{\phi}r_{j_1}^P < {}^{\phi}r_{j_2}^P$. If all the constituent components in ${}^{\phi}PS_{j_1}^m$ do not belong to any other minimal path set, then $I_{\phi}^{MPS}(j_1) > I_{\phi}^{MPS}(j_2)$.

Proof:

The proof follows a similar vein to that of Theorem 4.2.4.

As there are ${}^{\phi}v$ minimal path sets ${}^{\phi}PS_j^m$ for $j = 1,2,\ldots,{}^{\phi}u-1,{}^{\phi}u$ in the system, consider a sequence of $n-r$ component failures where $r \geq {}^{\phi}r_{j_2}^P$ and at least one component in each minimal path set ${}^{\phi}PS_j^m$ $j \neq j_2$ is failed. At this point, the failure of any component in ${}^{\phi}PS_{j_2}^m$ will cause system failure i.e. ${}^{\phi}PS_{j_2}^m$ causes system failure. Replacing ${}^{\phi}r_{j_1}^P$ of the r functioning components with functioning components of ${}^{\phi}PS_{j_1}^m$ (this requires replacing the failed components of ${}^{\phi}PS_{j_1}^m$ with failed components of ${}^{\phi}PS_{j_2}^m$), we have that ${}^{\phi}PS_{j_1}^m$ now causes system failure.

Furthermore, as the components of ${}^{\phi}PS_{j_1}^m$ do not belong to any other minimal path set, the newly generated failure sequence is distinct from the original failure sequence. Thus, as any sequence of component failure for which minimal path set ${}^{\phi}PS_{j_2}^m$ causes system failure, we have shown that a corresponding sequence of component failure exists for which minimal path set ${}^{\phi}PS_{j_1}^m$ causes system failure. Coupled with the alternative definition of minimal path set structural importance, the requisite result follows.

Proposition 4.2.5 and Theorem 4.2.8 also follow directly from Proposition 4.2.1 and Theorem 4.2.4, with the proof being consequences of Lemma 2.3.6 and (2.2.5).

4.3 Sequential Contributory Importance Measure

Contrary to Barlow and Proschan, Lambert [13] believed that the importance of a component need not only be measured when the failure of the component leads to system, but also in the case when a component failure contributes to system failure. As such, Lambert wished to assess the role that the failure of a component has when another component causes system failure. In other words, if component c_k had caused system failure, Lambert wanted to establish how influential the failure of component c_i had been in causing system failure. Clearly, c_i would have an impact only if it belongs to at least one minimal cut set together with c_k.

Proposition 4.3.1:
The probability at time *t* that component c_i is critical when component c_k causes system failure, given that the system is failed, is:

$$\frac{\int_0^t \left\{h_\phi\left(0_i,1_k,\overline{\mathbf{F}}(t)\right)-h_\phi\left(0_i,0_k,\overline{\mathbf{F}}(t)\right)\right\}F_i(u)\,dF_k(u)}{1-h_\phi\left(\overline{\mathbf{F}}(t)\right)} \qquad (4.3.1)$$

Proof:

Let component c_i and c_k both belong to the at least one minimal cut set and suppose that c_k fails at fixed time $u \in [0,t]$. We have that, for c_k to cause system failure, c_i must already be failed by time u and that c_k is critical at time u. Thus, $\left\{h_\phi(0_i,1_k,\overline{\mathbf{F}}(u)) - h_\phi(0_i,0_k,\overline{\mathbf{F}}(u))\right\}F_i(u)f_k(u)du$ expresses approximately the probability that c_k causes system failure in $[u,u+du]$ whilst c_i is critical for the failure of the system, where du is defined such that only c_k can fail in $[u,u+du]$. Integrating over all possible values for u and by dividing by the probability that the system is failed yields (4.3.1).

Note that, in Proposition 4.3.1, the term 'critical' for component c_i is not used in its accustomed form, Here, we say that c_i is critical for the component c_k such that c_k will contribute to system failure provided that c_i is already failed. In other words, c_k is critical for system failure if only if c_i is already failed.

Now, summing across all possible components c_k for which component c_i is critical when component c_k causes system failure, given that the system is failed, generates:

Definition 4.3.2: *Sequential Contributory Importance*

The Sequential Contributory Importance Measure for component c_i under structure function ϕ and vector of component availabilities $\overline{\mathbf{F}}(t)$ is defined as:

$$\frac{\sum_{j=1}^{{}^{\phi}\nu(i)} \sum_{k \in CS_j^m(i)\setminus\{i\}} \int_0^t \left\{h_\phi(0_i,1_k,\overline{\mathbf{F}}(t)) - h_\phi(0_i,0_k,\overline{\mathbf{F}}(t))\right\}F_i(u)dF_k(u)}{1-h_\phi(\overline{\mathbf{F}}(t))} \qquad (4.3.2)$$

For our audio system, we have that ${}^{\phi}CS_1^m = \{3,4\}$ being the only minimal cut set containing more than one component, hence we can only define the sequential contributory importance between components c_3 and c_4. Now, as $\overline{F}_i(t) = e^{-\lambda_i R(t)}$

for $i = 1,2,3,4$ and $h_\phi\left(\overline{\mathbf{F}}(t)\right) = \overline{F}_1(t)\overline{F}_2(t)\left(1 - F_3(t)F_4(t)\right)$, we have that $h_\phi\left(0_3,1_4,\overline{\mathbf{F}}(t)\right) - h_\phi\left(0_3,0_4,\overline{\mathbf{F}}(t)\right) = e^{-(\lambda_1+\lambda_2)R(t)}$ and thus the sequential contributory importance of component c_3 is

$$\lambda_4\left[\left(\lambda_1+\lambda_2+\lambda_4\right)^{-1}\left(1-e^{-(\lambda_1+\lambda_2+\lambda_4)R(t)}\right)-\left(\lambda_1+\lambda_2+\lambda_3+\lambda_4\right)^{-1}\left(1-e^{-(\lambda_1+\lambda_2+\lambda_3+\lambda_4)R(t)}\right)\right]$$

We can now define the sequential contributory importance for component c_i under the dual system.

Theorem 4.3.3: *Sequential Contributory Importance under the Dual System*
The Sequential Contributory Importance Measure for component c_i under the dual structure function ϕ^D and vector of component availabilities $\mathbf{F}(t)$ is defined as:

$$\frac{\sum_{j=1}^{\phi u(i)} \sum_{k \in PS_j^m(i)\setminus\{i\}} \int_0^t \left\{h_\phi\left(1_i,1_k,\overline{\mathbf{F}}(t)\right) - h_\phi\left(1_i,0_k,\overline{\mathbf{F}}(t)\right)\right\}\overline{F}_i(u)\,dF_k(u)}{1 - h_\phi\left(\overline{\mathbf{F}}(t)\right)} \qquad (4.3.3)$$

Proof:
(4.3.3) follows from applying (2.3.3) and Lemma 2.3.6 to (4.3.2).

Hence, (4.3.3) could define a new measure. wherein the measure will assess the role that the functioning of a component has when another component causes system failure. In other words, if component c_k had caused system failure, one can attempt establish how influential the functioning of component c_i had been in causing system failure.

4.4 Upgrade Function Importance

Lambert wished to describe an importance measure that aptly reflected which component of the system should be upgraded first in order to reduce, by as much

as possible, the probability of system failure being associated with the failure of the upgraded component.

Initially, Birnbaum's measure given in Definition 3.1.6 was considered to be most appropriate. However, from (3.1.5) we see that a downside of the measure is that, for the upgrade of component c_i, the measure does not depend on $p_i = \overline{F}_i(t)$, the availability – either before or after the upgrade – of c_i. Hence the measure does not take the magnitude of the upgrade into account.

Lambert proposed comparing the difference in system availability caused by equal relative changes in each component's availability, defining the constant γ to be the relative increase in each $\overline{F}_i(t)$ for $i = 1,2,\ldots,n-1,n$. Therefore, the comparing the expressions

$$h_\phi\left(\left((1+\gamma)\overline{F}_i(t), \overline{\mathbf{F}}(t)\right)\right) - h_\phi\left(\left(\overline{F}_i(t), \overline{\mathbf{F}}(t)\right)\right)$$

for each component c_i would identify the component which would have the greatest effect of increasing system availability or, correspondingly, reduce the probability of system failure – the greatest effect being associated with eth largest difference in the expression.

Multiplying by the appropriate constant, we can equivalently consider the expression:

$$\overline{F}_i(t)\ \frac{h_\phi\left(\left((1+\gamma)\overline{F}_i(t), \overline{\mathbf{F}}(t)\right)\right) - h_\phi\left(\left(\overline{F}_i(t), \overline{\mathbf{F}}(t)\right)\right)}{\gamma\,\overline{F}_i(t)}$$

Taking the limit as γ tend to zero from the right, the above expression reduces down to $\overline{F}_i(t)\dfrac{\partial h_\phi\left(\overline{\mathbf{F}}(t)\right)}{\partial \overline{F}_i(t)} = \overline{F}_i(t)\left\{h_\phi\left(1_i, \overline{\mathbf{F}}(t)\right) - h_\phi\left(0_i, \overline{\mathbf{F}}(t)\right)\right\} = \overline{F}_i(t) I_\phi^{\mathrm{B}}\left(i, \mathbf{F}(t)\right)$ by the application of (3.1.6).

Definition 4.4.1: *Upgrade Function Importance*

The Upgrade Function importance of component c_i under a system with structure function ϕ is:

$$I_{\phi}^{UP}\left(i,\overline{\mathbf{F}}(t)\right)=\overline{F}_i(t)I_{\phi}^{\mathrm{B}}\left(i,\overline{\mathbf{F}}(t)\right) \qquad (4.4.1)$$

Comparing (4.4.1) to (3.4.1), we see that the upgrade function importance measure is the same as the Ryabinin – Cherkesov importance measure.

Another approach to defining Upgrade Function Importance would be to use the hazard rate functions of the components instead of their availabilities, since the hazard rate function is physically more measurable in practice.

Definition 4.4.2: *Upgrade Function Importance under Hazard Rate Functions*

The Upgrade Function importance of component c_i with hazard rate function $h_i(t)$ under a system with structure function ϕ is:

$$I_{\phi}^{UP}\left(i,\mathbf{h}(t)\right)=h_i(t)\frac{\partial h_{\phi}\left(\mathbf{h}(t)\right)}{\partial h_i(t)} \qquad (4.4.2)$$

where $\mathbf{h}(t)=\left(h_1(t),h_2(t),\ldots,h_{n-1}(t),h_n(t)\right)$ and $h_{\phi}\left(\mathbf{h}(t)\right)=h_{\phi}\left(\overline{\mathbf{F}}(t)\right)$ with $\overline{F}_i(t)=\exp\left\{-\int_0^t h_i(t)\,dt\right\}$.

Theorem 4.4.3: *Equivalence of Upgrade Function Importance Rankings under Constant Hazard Rate Functions.*

The ranking induced by the upgrade function importance under Definition 4.4.1 is the same as that induced under Definition 4.4.2 under the constant hazard rate function case.

Proof:

From Definition 4.4.2 and the use of the chain rule for differentiation yields

$I_{\phi}^{UP}\left(i,\mathbf{h}(t)\right) = h_i(t)\dfrac{\partial h_{\phi}\left(\mathbf{h}(t)\right)}{\partial h_i(t)} = h_i(t)\dfrac{\partial h_{\phi}\left(\overline{\mathbf{F}}(t)\right)}{\partial \overline{F}_i(t)}\dfrac{\partial \overline{F}_i(t)}{\partial h_i(t)}$. As $h_i(t) = \lambda_i$ is constant with respect to t, we have that $\overline{F}_i(t) = \exp\left\{-\int_0^t h_i(t)\,dt\right\} = \exp\{-\lambda_i t\}$ giving

$$I_{\phi}^{UP}\left(i,\mathbf{h}(t)\right) = -\lambda_i t \exp\{-\lambda_i t\}\frac{\partial h_{\phi}\left(\overline{\mathbf{F}}(t)\right)}{\partial \overline{F}_i(t)}$$

$$= \overline{F}_i(t)\frac{\partial h_{\phi}\left(\overline{\mathbf{F}}(t)\right)}{\partial \overline{F}_i(t)}\log \overline{F}_i(t) = I_{\phi}^{UP}\left(i,\overline{\mathbf{F}}(t)\right)\log \overline{F}_i(t)$$

4.5 Natvig Importance

As Barlow and Proschan did, Natvig [28] observed that both Birnbaum and Vesely-Fussell Importance are defined for fixed points in time during the lifetime of the system. However, Natvig suggested an alternative method of defining importance measures that catered for this deficiency.

Definition 4.5.1: *Natvig Importance*

The importance of component c_i under a system with structure function ϕ is defined as:

$$I_{\phi}^{N}\left(i,\overline{\mathbf{F}}(t)\right) = E\left[{}^{\phi}W_i\right] \Big/ \sum_{j=1}^{n} E\left[{}^{\phi}W_j\right] \qquad (4.5.1)$$

where ${}^{\phi}W_i$ is an appropriately defined random variable related to c_i and the system with structure function ϕ.

We tacitly assume in Definition 4.5.1 that $0 \le E\left[{}^{\phi}W_i\right] < \infty$ for all $i = 1,2,\ldots,n-1,n$.

Clearly, all Natvig importance measures would have the following properties:

Theorem 4.5.2: *Properties of Natvig Importance*

i. $0 \le I_{\phi}^{N}\left(i, \overline{\mathbf{F}}(t)\right) \le 1$ for all $i = 1,2,\ldots,n-1,n$.

ii. $\sum_{j=1}^{n} I_{\phi}^{N}\left(j, \overline{\mathbf{F}}(t)\right) = 1$

Proof:

As $0 \le E\left[{}^{\phi}W_i\right] \le \sum_{j=1}^{n} E\left[{}^{\phi}W_j\right] < \infty$, our results follow directly.

As there are various random variables ${}^{\phi}W_i$ relating to a system component c_i, Natvig consider several different measures of importance. We will now describe some of them.

As in the case of Barlow-Proschan importance, we will initially assume that all systems operate without component repair. Natvig thought it to be sensible that components which strongly reduce the remaining lifetime of a system upon failure should be considered the most important. Thus, Natvig defined his first measure.

Definition 4.5.3: *Natvig's N_1 Importance*

The Natvig N_1 importance measure for component c_i under a system with structure function ϕ is:

$$I_{\phi}^{N_1}(i) = E\left[{}^{\phi}Z_i\right] \Big/ \sum_{j=1}^{n} E\left[{}^{\phi}Z_j\right] \qquad (4.5.2)$$

where

${}^{\phi}Z_i$ = The reduction in the remaining system lifetime due to failure of c_i at time t.

Natvig then went on the find an analytic expression for $E\left[{}^{\phi}Z_i\right]$.

Theorem 4.5.4:

For fixed time points $t \le u$, let $\overline{F}_{i|x_i}(u|t)$ be the conditional availability of component c_i at time $t+u$, given that c_i is in state x_i at time t, and let $\overline{\mathbf{F}}_{\mathbf{x}}(u|t)$ be the vector of such conditional availabilities, given state vector **x** and time t. It follows that

$$E\left[{}^{\phi}Z_i\right] = \int_0^{\infty} \sum_{all(\cdot_i,\mathbf{x})} \prod_{j\neq i} \left\{F_j(t)\right\}^{1-x_j} \left\{\overline{F}_j(t)\right\}^{x_j} \times \int_0^{\infty} \left\{h_{\phi}\left(\overline{\mathbf{F}}_{(1_i,\mathbf{x})}(u|t)\right) - h_{\phi}\left(\overline{\mathbf{F}}_{(0_i,\mathbf{x})}(u|t)\right)\right\} du\, f_i(t)\, dt \qquad (4.5.3)$$

Proof:

By definition, we have $\overline{F}_{i|x_i=1}(u|t) = \overline{F}_i(t+u)/\overline{F}_i(t)$ and $\overline{F}_{i|x_i=0}(u|t) = 0$. Also, we can define ${}^{\phi}Z_i = {}^{\phi}Y_i^1 - {}^{\phi}Y_i^0$ where ${}^{\phi}Y_i^1$ and ${}^{\phi}Y_i^0$ are the remaining system lifetime just before and just after the failure of c_i respectively i.e. ${}^{\phi}Y_i^1$ and ${}^{\phi}Y_i^0$ are the remaining system lifetime given that either c_i is functioning or c_i is failed respectively. Conditioning on the possible states of each component at time t, we have that $\int_0^{\infty} h_{\phi}\left(\overline{\mathbf{F}}_{\mathbf{x}}(u|t)\right) du$ is the expected remaining system lifetime at time t when c_i is in state x_i in **x**. Hence, the term $\int_0^{\infty} \left\{h_{\phi}\left(\overline{\mathbf{F}}_{(1_i,\mathbf{x})}(u|t)\right) - h_{\phi}\left(\overline{\mathbf{F}}_{(0_i,\mathbf{x})}(u|t)\right)\right\} du$ is the expected value of ${}^{\phi}Z_i$ at time t, given state vector **x**. Multiplying by the probability of obtaining state vector **x** and the failure of c_i at time t and then integrating over all possible values of t, we obtain the required result.

In a subsequent paper, Natvig [29] found an alternative method of defining $E\left[{}^{\phi}Z_i\right]$.

Theorem 4.5.5: *Alternative definition for* $E\left[{}^{\phi}Z_i\right]$

$$E\left[{}^{\phi}Z_i\right] = -\int_0^{\infty} I_{\phi}^{B}\left(i, \overline{\mathbf{F}}(v)\right) \overline{F}_i(v) \ln \overline{F}_i(v)\, dv \qquad (4.5.4)$$

Proof:

From (4.5.3), the conditioning on the states of all system components other than component c_i is unnecessary. Hence,

$$E\left[{}^{\phi}Y_i^1\right]=\int_0^{\infty}\int_0^{\infty}h_{\phi}\left(\left(\overline{F}_{i|x_i=1}(u|t)\right)_i,\overline{\mathbf{F}}(t)\right)du\,f_i(t)\,dt=\int_0^{\infty}\int_0^{\infty}h_{\phi}\left(\left(\frac{\overline{F}_i(t+u)}{\overline{F}_i(t)}\right)_i,\overline{\mathbf{F}}(t)\right)du\,f_i(t)\,dt$$

and $E\left[{}^{\phi}Y_i^1\right]=\int_0^{\infty}\int_0^{\infty}h_{\phi}\left(\left(\overline{F}_{i|x_i=0}(u|t)\right)_i,\overline{\mathbf{F}}(t)\right)du\,f_i(t)\,dt=\int_0^{\infty}\int_0^{\infty}h_{\phi}\left(0_i,\overline{\mathbf{F}}(t)\right)du\,f_i(t)\,dt$

As ${}^{\phi}Z_i={}^{\phi}Y_i^1-{}^{\phi}Y_i^0$ and by conducting a pivotal decomposition of the system availability function in the expression for $E\left[{}^{\phi}Y_i^1\right]$, we obtain that

$$E\left[{}^{\phi}Z_i\right]=\int_0^{\infty}\int_0^{\infty}\left\{h_{\phi}\left(1_i,\overline{\mathbf{F}}(t+u)\right)-h_{\phi}\left(0_i,\overline{\mathbf{F}}(t+u)\right)\right\}\frac{\overline{F}_i(t+u)}{\overline{F}_i(t)}du\,f_i(t)\,dt$$

By (3.1.5) we have $I_{\phi}^{B}\left(i,\overline{\mathbf{F}}(t+u)\right)=\left\{h_{\phi}\left(1_i,\overline{\mathbf{F}}(t+u)\right)-h_{\phi}\left(0_i,\overline{\mathbf{F}}(t+u)\right)\right\}$. If we make the substitution $v=t+u$ and then change the order of integration we have $E\left[{}^{\phi}Z_i\right]=\int_0^{\infty}\int_0^{v}\frac{f_i(t)}{\overline{F}_i(t)}dt\,\overline{F}_i(v)I_{\phi}^{B}\left(i,\mathbf{F}(t)\right)dv$. Integrating with respect to t yields (4.5.4).

For our audio playback system, we recall that $I_{\phi}^{B}\left(2,\overline{\mathbf{F}}(t)\right)=\overline{F}_1(t)\left(1-F_3(t)F_4(t)\right)$ and $I_{\phi}^{B}\left(3,\overline{\mathbf{F}}(t)\right)=\overline{F}_1(t)\overline{F}_2(t)F_4(t)$. Thus, under the proportional hazard rates cases, and using (4.5.4) we have

$$E\left[{}^{\phi}Z_2\right]=\int_0^{\infty}\lambda_2R(t)e^{-(\lambda_1+\lambda_2)R(t)}\left[1-\left(1-e^{-\lambda_3R(t)}\right)\left(1-e^{-\lambda_4R(t)}\right)\right]dt$$

$$E\left[{}^{\phi}Z_3\right]=\int_0^{\infty}\lambda_3R(t)e^{-(\lambda_1+\lambda_2+\lambda_3)R(t)}\left(1-e^{-\lambda_4R(t)}\right)dt$$

Letting $R(t)=t$ yields

$$E\left[{}^{\phi}Z_2\right]=\lambda_2\left[\left(\lambda_1+\lambda_2+\lambda_3\right)^{-2}+\left(\lambda_1+\lambda_2+\lambda_4\right)^{-2}-\left(\lambda_1+\lambda_2+\lambda_3+\lambda_4\right)^{-2}\right]$$

$$E\left[{}^{\phi}Z_3\right]=\lambda_2\left[\left(\lambda_1+\lambda_2+\lambda_3\right)^{-2}-\left(\lambda_1+\lambda_2+\lambda_3+\lambda_4\right)^{-2}\right]$$

$$\sum_{j=1}^{4}E\left[{}^{\phi}Z_j\right]=\left(\lambda_1+\lambda_2+\lambda_3\right)^{-1}+\left(\lambda_1+\lambda_2+\lambda_4\right)^{-1}-\left(\lambda_1+\lambda_2+\lambda_3+\lambda_4\right)^{-1}.$$

Therefore, by (4.5.2)

$$I_{\phi}^{N_1}(2)=\frac{\lambda_2\left[(\lambda_1+\lambda_2+\lambda_3)^{-2}+(\lambda_1+\lambda_2+\lambda_4)^{-2}-(\lambda_1+\lambda_2+\lambda_3+\lambda_4)^{-2}\right]}{(\lambda_1+\lambda_2+\lambda_3)^{-1}+(\lambda_1+\lambda_2+\lambda_4)^{-1}-(\lambda_1+\lambda_2+\lambda_3+\lambda_4)^{-1}}$$

$$I_{\phi}^{N_1}(3)=\frac{\lambda_3\left[(\lambda_1+\lambda_2+\lambda_3)^{-2}-(\lambda_1+\lambda_2+\lambda_3+\lambda_4)^{-2}\right]}{(\lambda_1+\lambda_2+\lambda_3)^{-1}+(\lambda_1+\lambda_2+\lambda_4)^{-1}-(\lambda_1+\lambda_2+\lambda_3+\lambda_4)^{-1}}$$

Under the dual system, Theorem 4.5.5 becomes:

Corollary 4.5.6:

$$E\left[{}^{\phi^D}Z_i\right]=-\int_0^{\infty} I_{\phi}^{B}\left(i,\overline{\mathbf{F}}(v)\right)F_i(v)\ln F_i(v)\,dv \qquad (4.5.5)$$

Proof:

The result follows by applying (3.1.9) to (4.5.4).

Thus, Corollary 4.5.6 could lead to the definition of a new measure related to Natvig's N_1 measure. However, investigation is needed to determine whether the definition of this measure would bring about any meaningful results.

In particular, for a series and parallel system, we have that the Nativg N_1 importance of component c_i becomes:

Theorem 4.5.7:

i. For a series system, we have that

$$I_{\phi}^{N_1}\left(i,\overline{\mathbf{F}}(t)\right)=\frac{\int_0^{\infty}\prod_{j=1}^{n}\overline{F}_j(v)\ln\overline{F}_i(v)\,dv}{\sum_{i=1}^{n}\int_0^{\infty}\prod_{j=1}^{n}\overline{F}_j(v)\ln\overline{F}_i(v)\,dv} \qquad (4.5.6)$$

ii. For a parallel system, we have that

$$I_{\phi}^{N_1}\left(i,\overline{\mathbf{F}}(t)\right)=\frac{\int_0^{\infty}\prod_{j\neq i}F_j(v)\,\overline{F}_j(v)\ln\overline{F}_i(v)\,dv}{\sum_{i=1}^{n}\int_0^{\infty}\prod_{j\neq i}F_j(v)\,\overline{F}_j(v)\ln\overline{F}_i(v)\,dv} \qquad (4.5.7)$$

Proof:

For a series system, we have that $I_{\phi}^{B}\left(i,\overline{\mathbf{F}}(v)\right)=\prod_{j\neq i}\overline{F}_j(v)$ and thus from (4.5.4) we have $E\left[{}^{\phi}Z_i\right]=-\int_0^{\infty}\prod_{j=1}^{n}\overline{F}_j(v)\ln\overline{F}_i(v)\,dv$. (4.5.6) follows directly.

For a parallel system, $I_{\phi}^{B}\left(i,\overline{\mathbf{F}}(v)\right)=\prod_{j\neq i}F_j(v)$. From (4.5.4) we have that $E\left[{}^{\phi}Z_i\right]=-\int_0^{\infty}\prod_{j\neq i}F_j(v)\,\overline{F}_i(v)\ln\overline{F}_i(v)\,dv$ and therefore yielding (4.5.7).

Natvig further considered how his N_1 importance measure relates components under differing circumstances. These results are given below.

Lemma 4.5.8:

Let component c_i be in series (parallel) with the rest of the system. If $\overline{F}_j(t)>0$ for $t\in[0,\infty)$ and $j\neq i$, then $E\left[{}^{\phi}Z_i\right]$ is strictly increasing in $-\overline{F}_i(t)\ln\overline{F}_i(t)$. If $0<\overline{F}_i(t)<1$ for $t\in(0,\infty)$, then $E\left[{}^{\phi}Z_i\right]$ is strictly increasing (decreasing) in $\overline{F}_j(t)$ where $0<\overline{F}_j(t)<1$ and $j\neq i$.

Proof:

Let c_i be in series with the rest of the system. From (4.5.4) and as $I_{\phi}^{B}\left(i,\overline{\mathbf{F}}(v)\right)=h_{\phi}\left(1_i,\overline{\mathbf{F}}(v)\right)$ we have $E[Z_i]=-\int_0^{\infty}h_{\phi}\left(1_i,\overline{\mathbf{F}}(v)\right)\overline{F}_i(v)\ln\overline{F}_i(v)\,dv$. If $\overline{F}_j(v)>0$ for all $v\in[0,\infty)$ and $j\neq i$, then $h_{\phi}\left(1_i,\overline{\mathbf{F}}(v)\right)>0$ and $E\left[{}^{\phi}Z_i\right]$ is strictly increasing in $-\overline{F}_i(v)\ln\overline{F}_i(v)$. Moreover, as c_i is in series with the rest of the system and ϕ is a coherent system, $h_{\phi}\left(1_i,\overline{\mathbf{F}}(v)\right)$ is strictly increasing in $\overline{F}_j(v)$ for

$j \neq i$ and $0 < \overline{F}_j(v) < 1$. Since $-\overline{F}_i(v)\ln \overline{F}_i(v) > 0$ for $v \in (0,\infty)$, we have that $E\left[{}^{\phi}Z_i\right]$ is strictly increasing in $\overline{F}_j(v)$ for $j \neq i$ and $0 < \overline{F}_j(v) < 1$.

Let c_i be in parallel with the rest of the system. as $I_{\phi}^{B}\left(i, \overline{\mathbf{F}}(v)\right) = 1 - h_{\phi}\left(0_i, \overline{\mathbf{F}}(v)\right)$ we have $E\left[{}^{\phi}Z_i\right] = -\int_0^{\infty} \left\{1 - h_{\phi}\left(0_i, \overline{\mathbf{F}}(v)\right)\right\} \overline{F}_i(v)\ln \overline{F}_i(v)\, dv$. If $\overline{F}_j(v) > 0$ for all $v \in [0,\infty)$ and $j \neq i$, then $1 - h_{\phi}\left(0_i, \overline{\mathbf{F}}(v)\right) > 0$ for $v \in (0,\infty)$, and as $-\overline{F}_i(0)\ln \overline{F}_i(0) = 0$, we have that $E\left[{}^{\phi}Z_i\right]$ is strictly increasing in $-\overline{F}_i(v)\ln \overline{F}_i(v)$. Moreover, as c_i is in parallel with the rest of the system and ϕ is a coherent system, $1 - h_{\phi}\left(0_i, \overline{\mathbf{F}}(v)\right)$ is strictly decreasing in $\overline{F}_j(v)$ for $j \neq i$ and $0 < \overline{F}_j(v) < 1$. Since $-\overline{F}_i(v)\ln \overline{F}_i(v) > 0$ for $v \in (0,\infty)$, we have that $E\left[{}^{\phi}Z_i\right]$ is strictly decreasing in $\overline{F}_j(v)$ for $j \neq i$ and $0 < \overline{F}_j(v) < 1$.

Lemma 4.5.9:

Let component c_i be in series (parallel) with the rest of the system and let component c_i and component c_k have common lifetime distribution $F(t)$, then $I_{\phi}^{N_1}\left(i, \overline{\mathbf{F}}(t)\right) \geq I_{\phi}^{N_1}\left(k, \overline{\mathbf{F}}(t)\right)$.

Proof:

Let $\overline{F}_i(t) = \overline{F}_k(t) = \overline{F}(t)$ with component c_i being in series with the rest of the system i.e. $h_{\phi}\left(0_i, \overline{\mathbf{F}}(t)\right) = 0$ for all vector of component availabilities $\overline{\mathbf{F}}(t)$. From (3.1.5) and (2.1.6) we have

$$\begin{aligned} I_{\phi}^{B}\left(k, \overline{\mathbf{F}}(t)\right) &= h_{\phi}\left(1_k, \overline{\mathbf{F}}(t)\right) - h_{\phi}\left(0_k, \overline{\mathbf{F}}(t)\right) \\ &= \overline{F}(t)\left\{h_{\phi}\left(1_i, 1_k, \overline{\mathbf{F}}(t)\right) - h_{\phi}\left(1_i, 0_k, \overline{\mathbf{F}}(t)\right)\right\} \end{aligned}$$

$$\begin{aligned} I_{\phi}^{B}\left(i, \overline{\mathbf{F}}(t)\right) &= h_{\phi}\left(1_i, \overline{\mathbf{F}}(t)\right) \\ &= \overline{F}(t)\left\{h_{\phi}\left(1_i, 1_k, \overline{\mathbf{F}}(t)\right) - h_{\phi}\left(1_i, 0_k, \overline{\mathbf{F}}(t)\right)\right\} + h_{\phi}\left(1_i, 0_k, \overline{\mathbf{F}}(t)\right) \end{aligned}$$

By (4.5.4) we thus have $E\left[{}^{\phi}Z_i\right] = E\left[{}^{\phi}Z_k\right] - \int_0^{\infty} h_{\phi}\left(1_i, 0_k, \overline{\mathbf{F}}(t)\right)\overline{F}(t)\ln\left\{\overline{F}(t)\right\}dt$ i.e.

$E\left[{}^{\phi}Z_i\right] \geq E\left[{}^{\phi}Z_k\right]$ and our result follows from (4.5.2).

Now let c_i be in parallel with the rest of the system i.e. $h_{\phi}\left(1_i, \overline{\mathbf{F}}(t)\right) = 1$.

Analogously to the above we have

$$E\left[{}^{\phi}Z_i\right] = E\left[{}^{\phi}Z_k\right] - \int_0^{\infty}\left\{1 - h_{\phi}\left(0_i, 1_k, \overline{\mathbf{F}}(t)\right)\right\}\overline{F}(t)\ln\left\{\overline{F}(t)\right\}dt$$

i.e. $E\left[{}^{\phi}Z_i\right] \geq E\left[{}^{\phi}Z_k\right]$ and again our result follows from (4.5.2).

Theorem 4.5.10:

Let component c_i and component c_k be in series (parallel) with the rest of the system.

If $F_i(t) \geq F_k(t)$ ($\overline{F}_i(t) \geq \overline{F}_k(t)$) for $t \in [0,\infty)$, then $I_{\phi}^{N_1}\left(i, \overline{\mathbf{F}}(t)\right) \geq I_{\phi}^{N_1}\left(k, \overline{\mathbf{F}}(t)\right)$.

Proof:

As in Lemma 4.5.9, it suffices to show that $E\left[{}^{\phi}Z_i\right] \geq E\left[{}^{\phi}Z_k\right]$.

Let components c_i and c_k be in series with the rest of the system i.e.

$h_{\phi}\left(0_i, \overline{\mathbf{F}}(t)\right) = h_{\phi}\left(0_k, \overline{\mathbf{F}}(t)\right) = 0$, By (3.1.9) and (2.1.6) we have

$I_{\phi}^{B}\left(j, \overline{\mathbf{F}}(\mathbf{t})\right) = \overline{F}_l(t)h_{\phi}\left(1_j, 1_l, \overline{\mathbf{F}}(t)\right)$ for $j, l = i, k$ and $j \neq l$. Hence we have that

$$E\left[{}^{\phi}Z_i\right] - E\left[{}^{\phi}Z_k\right] = -\int_0^{\infty} h_{\phi}\left(1_i, 1_k, \overline{\mathbf{F}}(t)\right)\overline{F}_i(t)\overline{F}_k(t)\left\{\ln\overline{F}_i(t) - \ln\overline{F}_k(t)\right\}dt$$

Now $F_i(t) \geq F_k(t)$ implies that $\left\{\ln\overline{F}_i(t) - \ln\overline{F}_k(t)\right\} \leq 0$ and so $E\left[{}^{\phi}Z_i\right] \geq E\left[{}^{\phi}Z_k\right]$.

Let c_i and c_k be in parallel with the rest of the system i.e.

$h_{\phi}\left(1_i, \overline{\mathbf{F}}(t)\right) = h_{\phi}\left(1_k, \overline{\mathbf{F}}(t)\right) = 1$. Analogously, it follows that

$$E\left[{}^{\phi}Z_i\right] - E\left[{}^{\phi}Z_k\right] = -\int_0^{\infty}\left\{1 - h_{\phi}\left(0_i, 0_k, \overline{\mathbf{F}}(t)\right)\right\}F_i(t)F_k(t)\left\{\frac{\overline{F}_i(t)\ln\overline{F}_i(t)}{F_i(t)} - \frac{\overline{F}_k(t)\ln\overline{F}_k(t)}{F_k(t)}\right\}dt$$

Now $\overline{F}_i(t) \geq \overline{F}_k(t)$ implies that $\ln\overline{F}_i(t) \leq \ln\overline{F}_k(t)$ and $\left\{F_i(t)\right\}^{-1} \geq \left\{F_k(t)\right\}^{-1}$ i.e.

$$\left\{\frac{\overline{F}_i(t)\ln\overline{F}_i(t)}{F_i(t)} - \frac{\overline{F}_k(t)\ln\overline{F}_k(t)}{F_k(t)}\right\} \leq 0$$

Hence $E\left[{}^{\phi}Z_i\right] \geq E\left[{}^{\phi}Z_k\right]$.

Natvig also expressed his N_1 importance measure for systems with modules – given in Definition 4.5.11 – and derived an analytic result for it in Theorem 4.5.12.

Definition 4.5.11: *Natvig's N_1 Importance for Modules*

The Natvig N_1 importance measure for module m_k under a system with structure function ψ is:

$$I_{\psi}^{N_1}(k) = E\left[{}^{\psi}Z_k\right] \Big/ \sum_{j=1}^{n} E\left[{}^{\psi}Z_j\right] \tag{4.5.8}$$

where ${}^{\psi}Z_k$ is the reduction in the remaining system lifetime due to failure of m_k at time *t*.

Theorem 4.5.12:

$$\begin{aligned} E\left[{}^{\psi}Z_k\right] = \sum_{i \in m_k} \int_0^{\infty} \sum_{all(\cdot_i, \mathbf{x})} \left\{\phi_k(1_i, \mathbf{x}_k) - \phi_k(0_i, \mathbf{x}_k)\right\} \prod_{j \neq i} \left\{F_j(t)\right\}^{1-x_j} \left\{\overline{F}_j(t)\right\}^{x_j} \\ \times \int_0^{\infty} \left\{h_{\phi}\left(\overline{\mathbf{F}}_{(1_i, \mathbf{x})}(u \mid t)\right) - h_{\phi}\left(\overline{\mathbf{F}}_{(0_i, \mathbf{x})}(u \mid t)\right)\right\} du \, f_i(t) dt \end{aligned} \tag{4.5.9}$$

Proof:

The proof is identical as that of Theorem 4.5.4 except that we need to include the fact that failure of component c_i must also coincide with the failure of module m_k. Thus, $\int_0^{\infty} \left\{\phi_k(1_i, \mathbf{x}_k) - \phi_k(0_i, \mathbf{x}_k)\right\}\left\{h_{\phi}\left(\overline{\mathbf{F}}_{(1_i, \mathbf{x})}(u \mid t)\right) - h_{\phi}\left(\overline{\mathbf{F}}_{(0_i, \mathbf{x})}(u \mid t)\right)\right\} du$ represents the reduction in the remaining system lifetime due to the failure of c_i coinciding with the failure of m_k at time *t*, given state vector **x**. Multiplying by the probability of obtaining state vector **x** and the failure of c_i at time t and then integrating over all possible values of *t* and then summing across all components contained within m_k yields (4.5.9).

Note that $E\left[{}^{\psi}Z_k\right] \le \sum_{i \in m_k} E\left[{}^{\phi}Z_i\right]$ since ${}^{\psi}Z_k$ requires that module m_k fails upon the failure of component c_i.

The definition of N_1 importance in terms of systems with modules, also allowed Natvig to consider the importance of the how the failure of each minimal cut set contributed to the reduction in the system availability.

Definition 4.5.13: *Natvig's N_1 Importance for Minimal Cut Sets*

The Natvig 1 N_1 importance measure for minimal cut set ${}^{\phi}CS_j^m$ under a system with structure function ϕ is:

$$I_{\phi}^{N_1}(j) = E\left[Z\left({}^{\phi}CS_j^m\right)\right] \Big/ \sum_{l=1}^{n} E\left[Z\left({}^{\phi}CS_l^m\right)\right] \tag{4.5.10}$$

where $Z\left({}^{\phi}CS_j^m\right)$ is the reduction in the remaining system lifetime due to failure of ${}^{\phi}CS_j^m$ at time *t*.

Theorem 4.5.14:

Let $\overline{\mathbf{F}}_{\left(1_i, \mathbf{0}^{{}^{\phi}CS_j^m \setminus \{i\}}, \mathbf{x}\right)}(u \mid t)$ denote the conditional availability of minimal cut set ${}^{\phi}CS_j^m$ at time $u+t$, given that component c_i is functioning at time *t*, then

$$\begin{aligned} E\left[Z\left({}^{\phi}CS_j^m\right)\right] = & \sum_{i \in {}^{\phi}CS_j^m} \int_0^{\infty} \sum_{all(\cdot_i, \mathbf{x})} \prod_{l \notin {}^{\phi}CS_j^m} \left\{F_l(t)\right\}^{1-x_l} \left\{\overline{F}_l(t)\right\}^{x_l} \\ & \times \prod_{l \in {}^{\phi}CS_j^m \setminus \{i\}} F_l(t) \int_0^{\infty} h_{\phi}\left(\overline{\mathbf{F}}_{\left(1_i, \mathbf{0}^{{}^{\phi}CS_j^m \setminus \{i\}}, \mathbf{x}\right)}(u \mid t)\right) du \, f_i(t) \, dt \end{aligned} \tag{4.5.11}$$

Proof:

The result is obtained from (4.5.9) by treating ${}^{\phi}CS_j^m$ as a module of the system and noting that $h_{\phi}\left(\overline{\mathbf{F}}_{\left(1_i, \mathbf{0}^{{}^{\phi}CS_j^m \setminus \{i\}}, \mathbf{x}\right)}(u \mid t)\right) = 0$ and that the only state vectors that need

to be considered are those for which only one component of those contained in ${}^{\phi}CS_j^m$ are functioning.

From Theorem 4.5.3, ${}^{\phi}Y_i^1$ and ${}^{\phi}Y_i^0$ can be respectively defined as the remaining system lifetime just before and just after the failure of component c_i. Moreover, ${}^{\phi}Y_i^1$ can be interpreted as the remaining system lifetime just after the failure of c_i but where c_i (or the whole system if necessary) has immediately undergone a minimal repair as under Definition 2.4.4. Thus ${}^{\phi}Z_i = {}^{\phi}Y_i^1 - {}^{\phi}Y_i^0$ is the reduction in remaining system lifetime due to the failure of c_i where exactly one minimal repair of components is allowed. This assertion is shown to be true in Theorem 4.5.16.

Definition 4.5.15: *Alternative Interpretation of Natvig's N_1 Importance*
Natvig's N_1 importance of component c_i under a system with structure function ϕ, measures the importance of c_i wherein a single minimal repair of c_i is allowed.

We can now reformulate $E\left[{}^{\phi}Z_i\right]$ in terms of the Definition 4.5.16. The reformulation is the same as (4.5.5).

Theorem 4.5.16:

$$E\left[{}^{\phi}Z_i\right] = \int_0^{\infty} \overline{F}_i(t)\left\{-\ln \overline{F}_i(t)\right\} I_{\phi}^{B}\left(i, \mathbf{F}(t)\right) dt \qquad (4.5.12)$$

Proof:
Recall that $A_i(t)$ denotes the availability of component c_i when component repairs are permissible . As ${}^{\phi}Z_i = {}^{\phi}Y_i^1 - {}^{\phi}Y_i^0$ we have that

$$E\left[{}^{\phi}Z_i\right] = \int_0^{\infty} \left\{h_{\phi}\left(\left(A_i(t), \overline{\mathbf{F}}(t)\right)\right) - h_{\phi}\left(\overline{\mathbf{F}}(t)\right)\right\} dt$$

By conducting a pivot decomposition with respect to c_i and using (3.1.5)

$$E\left[{}^{\phi}Z_i\right] = \int_0^{\infty} \left\{A_i(t) - \overline{F}_i(t)\right\} I_{\phi}^{B}\left(i, \overline{\mathbf{F}}(t)\right) dt \qquad (4.5.13)$$

Now, as a single minimal repair is permissible, we have that

$$A_i(t) = \overline{F}_i(t) + \int_0^{\infty} \frac{\overline{F}_i(t)}{\overline{F}_i(t-u)} f_i(t-u)\,du = \overline{F}_i(t)\left\{1 - \ln \overline{F}_i(t)\right\}$$

where $\overline{F}_i(t) f_i(t-u) / \overline{F}_i(t-u)$ is the conditional probability that c_i will have lifetime $\overline{F}_i(t)$ at time t after undergoing a failure at time $t-u$. Substituting $A_i(t)$ into (4.5.13) yields (4.5.12).

From Theorem 4.5.16, we can reformulate Natvig's N_1 importance as

$I_{\phi}^{N_1}\left(i, \overline{\mathbf{F}}(t)\right) = \int_0^{\infty} {}^{\phi}w_i^{N_1}(t) I_{\phi}^{B}\left(i, \overline{\mathbf{F}}(t)\right) dt$ with weight function:

$${}^{\phi}w_i^{N_1}(t) = -\overline{F}_i(t) \ln \overline{F}_i(t) \Big/ \sum_{j=1}^{n} \left\{ -\int_0^{\infty} I_{\phi}^{B}\left(j, \overline{\mathbf{F}}(t)\right) \overline{F}_j(t) \ln \overline{F}_j(t)\, dt \right\}$$

Hence, ${}^{\phi}w_i^{N_1}(t)$ awkwardly depends on Birnbaum's importance of component c_i i.e. $I_{\phi}^{B}\left(i, \overline{\mathbf{F}}(t)\right)$ since we wanted the desirable property that measures of importance for all components should add up to one.

In order to remove this dependence, we can define the modified weight function

$$\begin{aligned} {}^{\phi}w_i^{N_1 *}(t) &= {}^{\phi}w_i^{N_1}(t) \Big/ \int_0^{\infty} {}^{\phi}w_i^{N_1}(t)\, dt \\ &= -\overline{F}_i(t) \ln \overline{F}_i(t) \Big/ -\int_0^{\infty} \overline{F}_i(t) \ln \overline{F}_i(t)\, dt \end{aligned} \qquad (4.5.14)$$

Definition 4.5.17: *Modified Natvig's N_1* Importance*

The modified Natvig N_1* importance measure for component c_i under a system with structure function ϕ is:

$$I_{\phi}^{N_1 *}\left(i, \overline{\mathbf{F}}(t)\right) = \int_0^{\infty} {}^{\phi}w_i^{N_1 *}(t) I_{\phi}^{B}\left(i, \overline{\mathbf{F}}(t)\right) dt \qquad (4.5.15)$$

where ${}^{\phi}w_i^{N_1 *}(t)$ is defined in (4.5.14)

We have seen that the Natvig N_1 importance measure defines the most important component of a system to be that component that most reduces the lifetime of a system upon its failure. An alternative approach by Natvig [30] would be to consider the case where all components undergo the same improvement within the length of their lifetime and then define the most important component as being that component which most improves the lifetime of a system.

For general systems, debate surrounds how to interpret these improvements on different components. However, in the case of components having proportional hazard rate functions, an interpretation of these improvements is that the same infinitesimal reduction in the proportional hazard rate functions occur i.e. the new measure speculated to be defined as

$$-\frac{\partial E[T]}{\partial \lambda_i} \Bigg/ \sum_{j=1}^{n} \left\{ -\frac{\partial E[T]}{\partial \lambda_j} \right\} \tag{4.5.16}$$

tacitly assuming that $-\partial E[T]/\partial \lambda_i < \infty$ for $i = 1,2,\ldots,n-1,n$.

Theorem 4.5.18:

$$-\frac{\partial E[T]}{\partial \lambda_i} = \frac{E\left[{}^{\phi}Z_i\right]}{\lambda_i}$$

Proof:

By definition, $E[T] = \int_0^{\infty} h_{\phi}\left(\overline{\mathbf{F}}(t)\right) dt$. Differentiating with respect to λ_i, assuming that the order of integration and differentiation can be reversed, and applying the chain rule of differentiation, we obtain

$$-\frac{\partial E[T]}{\partial \lambda_i} = -\int_0^{\infty} \frac{\partial h_{\phi}\left(\overline{\mathbf{F}}(t)\right)}{\partial \overline{F}_i(t)} \frac{\partial \overline{F}_i(t)}{\partial \lambda_i} dt = -\int_0^{\infty} I_{\phi}^{B}\left(i, \overline{\mathbf{F}}(t)\right) \partial \overline{F}_i(t)/\partial \lambda_i \, dt$$

Under the proportional hazard rate function case, we have $\overline{F}_i(t) = \exp\left\{-\lambda_i R(t)\right\}$ and $\partial \overline{F}_i(t)/\partial \lambda_i = -R(t)\overline{F}_i(t) = \overline{F}_i(t) \ln \overline{F}_i(t)/\lambda_i$ yielding, by Theorem 4.5.5,

$$-\frac{\partial E[T]}{\partial \lambda_i} = -\frac{1}{\lambda_i} \int_0^{\infty} I_{\phi}^{B}\left(i, \overline{\mathbf{F}}(t)\right) \overline{F}_i(t) \ln \overline{F}_i(t) dt = \frac{E\left[{}^{\phi}Z_i\right]}{\lambda_i}$$

In the case of a series system, we have from Theorem 4.5.7

$$\frac{E\left[{}^{\phi}Z_i\right]}{\lambda_i} = -\int_0^{\infty} \prod_{j=1}^{n} \overline{F}_j(t) \ln \overline{F}_i(t)\, dt = \int_0^{\infty} R(t) \exp\left\{-R(t)\sum_{j=1}^{n} \lambda_j\right\} dt$$

which ensures that all components are equally important irrespective of the value of each λ_i.

In order to remove this undesirable property of the importance measure, Natvig defined the following measure

Definition 4.5.19: *Natvig's N_2 Importance*

Natvig's N_2 importance, denoted by $I_{\phi}^{N_2}\left(i, \overline{\mathbf{F}}(t)\right)$, of component c_i under a system with structure function ϕ under the proportional hazard rate function assumption, is defined as:

$$I_{\phi}^{N_3}\left(i, \overline{\mathbf{F}}(t)\right) = \frac{\partial E[T]}{\partial \lambda_i^{-1}} \Bigg/ \sum_{j=1}^{n} \frac{\partial E[T]}{\partial \lambda_j^{-1}} \qquad (4.5.17)$$

tacitly assuming that $\partial E[T]/\partial \lambda_i^{-1} < \infty$ for $i = 1,2,\ldots,n-1,n$

The term $\partial E[T]/\partial \lambda_i^{-1}$ refers to the derivative of $E[T]$, the expected system lifetime, with respect to λ_i^{-1}.

In terms of component lifetimes being distributed exponentially, the Natvig N_2 importance is readily motivated b the previous discussion since λ_i^{-1} represents the expected lifetime of component c_i

Theorem 4.5.20:

$$\frac{\partial E[T]}{\partial \lambda_i^{-1}} = \lambda_i E\left[{}^{\phi}Z_i\right]$$

Proof:

Following the same procedure as in the proof of Theorem 4.5.?, we have that

$$-\frac{\partial E[T]}{\partial \lambda_i^{-1}} = -\int_0^\infty \frac{\partial h_\phi(\overline{\mathbf{F}}(t))}{\partial \overline{F}_i(t)} \frac{\partial \overline{F}_i(t)}{\partial \lambda_i^{-1}} dt = -\int_0^\infty I_\phi^B(i, \overline{\mathbf{F}}(t)) \partial \overline{F}_i(t) / \partial \lambda_i^{-1} \, dt$$

Also, we have that $\partial \overline{F}_i(t) / \partial \lambda_i^{-1} = \lambda_i^2 R(t) \exp\{-\lambda_i R(t)\} = -\lambda_i \overline{F}_i(t) \ln \overline{F}_i(t)$ and thus by Theorem 4.5.5 the result follows.

Returning to the N_1 importance, Natvig noted that his measure need not be restricted to considering system maintained with minimal repairs only. In his N_3 and N_4 importance measures, Natvig considered systems where total and perfect repairs are possible. The results are:

Definition 4.5.21: *Natvig's N_3 Importance*

Natvig's N_3 importance, denoted by $I_\phi^{N_3}(i, \overline{\mathbf{F}}(t))$ of component c_i under a system with structure function ϕ, measures the importance of c_i wherein a single total repair of c_i is allowed i.e.

$$I_\phi^{N_3}(i, \overline{\mathbf{F}}(t)) = E[{}^\phi U_i] \Big/ \sum_{j=1}^{n} E[{}^\phi U_j] \qquad (4.5.18)$$

where ${}^\phi U_i$ is the reduction in the remaining system lifetime due to failure of c_i and subsequent immediate total repair of c_i at time t.

Therefore, ${}^\phi U_i$ represents, in a somewhat intuitive sense, the reduction in the remaining lifetime of the system that is due to the wear and failure of component c_i.

Theorem 4.5.22:

$$E[{}^\phi U_i] = \int_0^\infty \int_0^t f_i(t-u) \overline{F}_i(u) \, du \, I_\phi^B(i, \overline{\mathbf{F}}(t)) \, dt \qquad (4.5.19)$$

Proof:

From Definition 2.4.3 we have $A_i(t) = \overline{F}_i(t) + \int_0^\infty \overline{F}_i(u) f_i(t-u)du$ and substituting into (4.5.13) yields (4.5.19).

For component lifetimes that are exponentially distributed, we have the following relationship between Natvig's N_1 and N_3 importance.

Theorem 4.5.23: *Equivalence of Natvig's N_1 and N_3 importance*

For all component lifetimes being exponentially, distributed, we have that Natvig's N_1 importance is equivalent to Natvig's N_3 importance.

Proof:

It suffices to show that $E\left[{}^{\phi}U_i\right] = E\left[{}^{\phi}Z_i\right]$ under $\overline{F}_i(t) = e^{-\lambda_i t}$ for $i \in I$.

Now $\int_0^t f_i(t-u)\overline{F}_i(u)du = \int_0^t \lambda_i e^{-\lambda_i t}dt = -\overline{F}_i(t)\ln \overline{F}_i(t)$. Substituting into (4.5.19) yields (4.5.4).

Examining the construction of Natvig's N_1 and N_3 importance in the proofs of Theorem 4.5.16 and Theorem 4.5.22 respectively, we can discern a more general condition for equivalence between the two measures. In fact, this equivalence occurs when $\overline{F}_i(t)/\overline{F}_i(t-u) = \overline{F}_i(u)$ i.e. when the lifetime distributions of all components have the memory-less property – a property of which the exponential distribution is renowned for.

Definition 4.5.24: *Natvig's N_4 Importance*

Natvig's N_4 importance, denoted by $I_\phi^{N_4}\left(i, \overline{\mathbf{F}}(t)\right)$ of component c_i under a system with structure function ϕ, measures the importance of c_i wherein a single replacement of c_i with a perfect component is allowed i.e.

$$I_\phi^{N_4}\left(i, \overline{\mathbf{F}}(t)\right) = E\left[{}^{\phi}V_i\right] \Big/ \sum_{j=1}^{n} E\left[{}^{\phi}V_j\right] \qquad (4.5.20)$$

where ${}^{\phi}V_i$ is the reduction in the remaining system lifetime due to failure of c_i and replacement of c_i with a perfect component at time t.

Theorem 4.5.25:

$$E\left[{}^{\phi}V_i\right] = \int_0^{\infty} F_i(t) I_{\phi}^{B}\left(i, \overline{\mathbf{F}}(t)\right) dt \qquad (4.5.21)$$

Proof:

From Definition 2.4.5 we have $A_i(t) = \overline{F}_i(t) + \int_0^{\infty} f_i(t-u)du = \overline{F}_i(t) + F_i(t)$ and substituting into (4.5.13) yields (4.5.21).

For our audio playback system, recall that $I_{\phi}^{B}\left(2, \overline{\mathbf{F}}(t)\right) = \overline{F}_1(t)\left(1 - F_3(t)F_4(t)\right)$ and $I_{\phi}^{B}\left(3, \overline{\mathbf{F}}(t)\right) = \overline{F}_1(t)\overline{F}_2(t)F_4(t)$. Thus, under the proportional hazard rates cases, and using (4.5.19) and (4.5.21) we have

$$E\left[{}^{\phi}U_2\right] = \lambda_2\left[\left(\lambda_1+\lambda_2+\lambda_3\right)^{-3} + \left(\lambda_1+\lambda_2+\lambda_4\right)^{-3} - \left(\lambda_1+\lambda_2+\lambda_3+\lambda_4\right)^{-3}\right]$$

$$E\left[{}^{\phi}U_3\right] = \lambda_3\left[\left(\lambda_1+\lambda_2+\lambda_3\right)^{-3} - \left(\lambda_1+\lambda_2+\lambda_3+\lambda_4\right)^{-3}\right]$$

$$E\left[{}^{\phi}V_2\right] = \left(\lambda_1+\lambda_3\right)^{-1} + \left(\lambda_1+\lambda_4\right)^{-1} - \left(\lambda_1+\lambda_2+\lambda_3\right)^{-1} - \left(\lambda_1+\lambda_2+\lambda_4\right)^{-1} - \left(\lambda_1+\lambda_3+\lambda_4\right)^{-1} + \left(\lambda_1+\lambda_2+\lambda_3+\lambda_4\right)^{-1}$$

$$E\left[{}^{\phi}V_3\right] = \left(\lambda_1+\lambda_2\right)^{-1} - \left(\lambda_1+\lambda_2+\lambda_3\right)^{-1} - \left(\lambda_1+\lambda_2+\lambda_4\right)^{-1} + \left(\lambda_1+\lambda_2+\lambda_3+\lambda_4\right)^{-1}$$

Natvig N_3 and N_4 importance follows from (4.5.18) and (4.5.20).

Similar results to Lemma 4.5.7, Lemma 4.5.8 and Theorem 4.5.9 can be found for the Natvig N_2, N_3 and N_4 importance measures, but these results are omitted for the sake of brevity.

Finally, under the dual system we have that

Theorem 4.5.26:

i. $$E\left[{}^{\phi^D}U_i\right] = E\left[{}^{\phi}V_i\right] - E\left[{}^{\phi}U_i\right] \tag{4.5.22}$$

ii. $$E\left[{}^{\phi^D}V_i\right] = \int_0^\infty \overline{F}_i(t) I_\phi^B\left(i, \overline{\mathbf{F}}(t)\right) dt \tag{4.5.23}$$

Proof:

By (4.5.19) and (3.1.9) we have that

$$\begin{aligned} E\left[{}^{\phi^D}U_i\right] &= \int_0^\infty \int_0^t f_i(t-u) F_i(u)\, du\, I_\phi^B\left(i, \overline{\mathbf{F}}(t)\right) dt \\ &= \int_0^\infty \int_0^t f_i(t-u)\, du\, I_\phi^B\left(i, \overline{\mathbf{F}}(t)\right) dt - E\left[{}^{\phi}U_i\right] \end{aligned}$$

But as $\int_0^t f_i(t-u)\, du = F_i(t)$ our (4.5.22) follows from (4.5.21).

(4.5.23) follows immediately from (4.5.21) and (3.1.9).

Thus, Theorem 4.5.26 allows the definition of new importance measures, In particular we have that term $E\left[{}^{\phi^D}U_i\right] = E\left[{}^{\phi}V_i\right] - E\left[{}^{\phi}U_i\right] = E\left[{}^{\phi}V_i - {}^{\phi}U_i\right]$ represents the expected reduction in the remaining system lifetime due to failure of c_i and replacement of c_i with a perfect component at time t rather than conducting a total repair. Hence, replacing ${}^{\phi}W_i$ with $E\left[{}^{\phi^D}U_i\right]$ in (4.5.1) would define a Natvig importance measure for component c_i that is based on the difference in system lifetime caused by total and perfect component replacement strategies used for c_i.

This would open up a whole new class of importance measures that will not only take system topology and component availabilities into account, but also the possible impact that a change in maintenance procedure may have on the system. Practically, this approach is advantageous in analysing the impact on component importance within already established systems where newly proposed maintenance procedures are being considered for implementation.

4.6 Bergman's Infinitesimal Scale Change Importance

Bergman [31] showed that the Barlow-Proschan and the Natvig's N_1, N_1*, N_2, N_3 and N_4 importance measures form part of a more general class of importance measures.

Theorem 4.6.1:

The difference in the expected lifetime of a system with structure function ϕ when the lifetime distribution $\overline{F}_i(t)$ of component c_i is replaced by the lifetime distribution $\overline{G}_i(t)$ is

$$^{\phi}\Delta_i = \int_0^{\infty} \left\{\overline{G}_i(t) - \overline{F}_i(t)\right\} I_{\phi}^{B}\left(i, \overline{\mathbf{F}}(t)\right) dt \qquad (4.6.1)$$

Proof:

(4.5.13) and (4.6.1) are equivalent expressions and thus the proof can be found in Theorem 4.5.16.

Definition 4.6.2: *Bergman's General Lifetime Distribution Replacement Importance*

The Bergman general lifetime distribution replacement importance of component c_i under a system with structure function ϕ is defined as:

$$I_{\phi}^{BGLDR}\left(i, \overline{\mathrm{G}}_i(t), \overline{\mathbf{F}}(t)\right) = {}^{\phi}\Delta_i \Big/ \sum_{j=1}^{n} {}^{\phi}\Delta_j \qquad (4.6.2)$$

where $^{\phi}\Delta_i$ is defined as in (4.6.1)

Bergman established the various cases of $\overline{G}_i(t)$ that lead to the equivalence of Barlow – Proschan and Natvig importance with Bergman's general lifetime distribution replacement importance.

Theorem 4.6.3: *Conditions for Equivalence between Bergman's General Lifetime Distribution Replacement and Natvig's N_1, N_1*, N_2, N_3 and N_4 Importance*

For

i. $\overline{G}_i(t) = \overline{F}_i(t) - \overline{F}_i(t)\ln \overline{F}_i(t)$

ii. $\overline{G}_i(t) = \overline{F}_i(t) + {}^{\phi}w_i^{N_1*}(t)$

iii. $\overline{G}_i(t) = \overline{F}_i(t) - \lambda_i \overline{F}_i(t)\ln \overline{F}_i(t)$

iv. $\overline{G}_i(t) = \overline{F}_i(t) + \int_0^t f_i(t-u)\overline{F}_i(u)\,du$

v. $\overline{G}_i(t) = 1$

we have equivalence between Bergman's general lifetime distribution replacement importance and Natvig's N_1, N_1*, N_2, N_3 and N_4 importance measures respectively

Proof:

Clearly, direct substitution of the required new lifetime distribution $\overline{G}_i(t)$ into (4.6.2) yields the necessary results.

Theorem 4.6.4: *Equivalence of Bergman's General Lifetime Distribution Replacement and Barlow-Proschan Importance*

For positive constant c infinitesimal, if $\overline{G}_i(t) = \overline{F}_i(t) + \{\overline{F}_i(t) - \overline{F}_i(t+c)\}/c$ then Barlow-Proschan and Bergman's general lifetime distribution replacement importance are equivalent.

Proof:

Now $\overline{G}_i(t) - \overline{F}_i(t) = \{\overline{F}_i(t) - \overline{F}_i(t-c)\}/c = \{F_i(t+c) - F_i(t)\}/c$. From (4.6.1) and taking constant c to be arbitrarily small, we have ${}^{\phi}\Delta_i = \int_0^{\infty} I_{\phi}^{B}(i, \overline{\mathbf{F}}(t))\,dF_i(t)$. It follows from Theorem 4.1.3 that $\sum_{j=1}^{n} \Delta_j = 1$ and thus yielding the required result.

An alternative method in demonstrating Theorem 4.6.4 is given below:

Theorem 4.6.5: *Alternative Method for Demonstrating Equivalence of Bergman's General Lifetime Distribution Replacement and Barlow-Proschan Importance*

For positive constant c infinitesimal, if $\overline{G}_i(t) = \overline{F}_i(t-c)$ then Barlow-Proschan and Bergman's general lifetime distribution replacement importance are equivalent.

Proof:

Clearly, we have that ${}^{\phi}\Delta_i = \int_0^{\infty} \{F_i(t) - F_i(t-c)\} I_{\phi}^{B}(i, \overline{\mathbf{F}}(t))\, dt$. Dividing each Δ_j, for $j = 1,2,\ldots,n-1,n$, by constant c leaves (4.6.2) unchanged. Therefore, taking c to be arbitrarily small, we have ${}^{\phi}\Delta_i = \int_0^{\infty} I_{\phi}^{B}(i, \overline{\mathbf{F}}(t))\, dF_i(t)$. The rest of the proof follows as in Theorem 4.6.4.

In Theorem 4.6.4 and Theorem 4.6.5, an infinitesimally small relative linear shift in the lifetime distribution of component c_i has occurred. Bergman suggests that another measure could be defined in terms of an infinitesimally small relative scaling shift in the lifetime distribution $\overline{F}_i(t)$ – in essence an acceleration (or more appropriately a deceleration) in the lifetime distribution.

Theorem 4.6.6:

For positive constant $c > 1$, if $\overline{G}_i(t) = \overline{F}_i(t) + \{\overline{F}_i(t/c) - \overline{F}_i(t)\} / \{c-1\}$ then

$$ {}^{\phi}\Delta_i = \int_0^{\infty} t\, I_{\phi}^{B}(i, \overline{\mathbf{F}}(t))\, dF_i(t) \qquad (4.6.3) $$

Proof:

We have that

$$ \overline{G}_i(t) - \overline{F}_i(t) = \frac{1}{c-1}\{\overline{F}_i(t/c) - \overline{F}_i(t)\} = \frac{1}{c-1}\{t - t/c\}\frac{F_i(t) - F_i(t/c)}{t - t/c} = t\,\frac{1}{c}\,\frac{F_i(t) - F_i(t/c)}{t - t/c} $$

Thus ${}^{\phi}\Delta_i = \int_0^{\infty} t \frac{1}{c} \frac{F_i(t) - F_i(t/c)}{t - t/c} I_{\phi}^{B}\left(i, \overline{\mathbf{F}}(t)\right) dt$ and taking c to be arbitrarily close to 1 yields the required result.

Definition 4.6.7: *Bergman's Infinitesimal Scale Change Importance*

The Bergman infinitesimal scale change importance of component c_i under a system with structure function ϕ is defined as:

$$I_{\phi}^{BISC}\left(i, \overline{\mathbf{F}}(t)\right) = {}^{\phi}\Delta_i \Big/ \sum_{j=1}^{n} {}^{\phi}\Delta_j \qquad (4.6.4)$$

where ${}^{\phi}\Delta_t$ is defined as in (4.6.3).

As with Theorem 4.6.4, an alternative method in demonstrating Theorem 4.6.6 exists.

Theorem 4.6.7:

For positive constant $c > 1$, if $\overline{G_i}(t) = \overline{F_i}(t/c)$ then ${}^{\phi}\Delta_i = \int_0^{\infty} t\, I_{\phi}^{B}\left(i, \overline{\mathbf{F}}(t)\right) dF_i(t)$

Proof:

Clearly, we have that ${}^{\phi}\Delta_i = \int_0^{\infty} \left\{F_i(t) - F_i(t/c)\right\} I_{\phi}^{B}\left(i, \overline{\mathbf{F}}(t)\right) dt$. Dividing each ${}^{\phi}\Delta_j$, for $j = 1,2,\ldots,n-1,n$, by constant $(c-1)$ leaves (4.6.4) unchanged. Manipulating ${}^{\phi}\Delta_i$ as in Theorem 4.6.6 will yield ${}^{\phi}\Delta_i = \int_0^{\infty} t\, I_{\phi}^{B}\left(i, \overline{\mathbf{F}}(t)\right) dF_i(t)$.

Theorem 4.6.8: *Equivalence between Bergman's Infinitesimal Scale Change Importance and Natvig's N_1 Importance*

Suppose that the lifetimes of all components within a system is exponentially distributed, then Bergman's infinitesimal scale change importance and Natvig's N_1 importance for component c_i are equivalent.

Proof:

It is sufficient to show that $E\left[{}^{\phi}Z_i\right] = {}^{\phi}\Delta_t$. By supposition, we have that $\overline{F}_i(t) = e^{-\lambda_i t}$ and hence $\overline{F}_i(t)\ln\overline{F}_i(t) = -\lambda_t t e^{-\lambda_t t} = -t\, f_i(t)$.

Substituting into (4.5.5) yields $E\left[{}^{\phi}Z_i\right] = \int_0^{\infty} t\, I_i^B\left(i, \overline{\mathbf{F}}(t)\right) f_i(t)\, dt = {}^{\phi}\Delta_i$ by (4.6.3).

4.7 Expected Yield Importance

Bergman surmised that the Natvig N_1, N_1*, N_2, N_3, N_4 importance as well as his infinitesimal scale change measure are special cases of a more general importance measure. All of these measures are defined in terms of the expected system lifetime $E[T]$ after the lifetime distribution of component c_i had altered in some way.

Bergman indicated that this expected system lifetime is only a special case of another general performance measure, based on the expected yield function of the system lifetime i.e. $E[Y(T)]$ where $Y(t)$ for $t \geq 0$ represents the yield function and is defined as an increasing real-valued function of the system lifetime with $Y(0) = 0$.

Xie [32] undertook to develop this measure.

Theorem 4.7.1:

The difference in the expected yield function of the system lifetime of a system with structure function ϕ when the lifetime distribution $\overline{F}_i(t)$ of component c_i is replaced by the lifetime distribution $\overline{G}_i(t)$ is

$$ {}^{\phi}\Delta_i^Y = \int_0^{\infty} \left\{\overline{G}_i(t) - \overline{F}_i(t)\right\} I_{\phi}^B\left(i, \overline{\mathbf{F}}(t)\right) dY(t) \qquad (4.7.1) $$

Proof:

We have that the expected yield function of the system lifetime with $\overline{F}_i(t)$ as the availability of component c_i is

$$E[Y(T)] = \int_0^\infty Y(t)\, d\{1 - h_\phi(\overline{\mathbf{F}}(t))\} = -\int_0^\infty Y(t)\, dh_\phi(\overline{\mathbf{F}}(t)) = \int_0^\infty h_\phi(\overline{\mathbf{F}}(t))\, dY(t).$$

Conducting a pivot decomposition of the availability of the system we get

$$\begin{aligned} E[Y(T)] &= \int_0^\infty \{\overline{F}_i(t) h_\phi(1_i, \overline{\mathbf{F}}(t)) + F_i(t) h_\phi(0_i, \overline{\mathbf{F}}(t))\} dY(t) \\ &= \int_0^\infty \overline{F}_i(t) I_\phi^B(i, \overline{\mathbf{F}}(t))\, dY(t) + \int_0^\infty h_\phi(0_i, \overline{\mathbf{F}}(t))\, dY(t) \end{aligned}$$

Similarly, the yield function of the system lifetime under $\overline{G}_i(t)$ as the availability of component c_i is $E[Y(T)] = \int_0^\infty \overline{G}_i(t) I_\phi^B(i, \overline{\mathbf{F}}(t))\, dY(t) + \int_0^\infty h_\phi(0_i, \overline{\mathbf{F}}(t))\, dY(t)$ and the result follows by taking the appropriate difference.

Definition 4.7.2: *Xie's General Expected Yield Importance*

The Xie general expected yield importance of component c_i under a system with structure function ϕ under yield function $Y(t)$ is defined as:

$$I_\phi^{XGEY}(i, \overline{G}_i(t), \overline{\mathbf{F}}(t)) = {}^\phi\Delta_i^Y \Big/ \sum_{j=1}^n {}^\phi\Delta_j^Y \qquad (4.7.2)$$

where ${}^\phi\Delta_i^Y$ is defined as in (4.7.1).

Similar to Bergman's infinitesimal scale change importance, Xie defined the expected yield importance of component c_i by considering an infinitesimal linear transposition of the lifetime distribution of c_i. The definition of this measure is given in Definition 4.7.5. Theorem 4.7.3 and Theorem 4.7.4 are used in defining the expected yield importance.

Theorem 4.7.3:

For positive constant c infinitesimal, if $\overline{G}_i(t) = \overline{F}_i(t) + \{\overline{F}_i(t) - \overline{F}_i(t+c)\}/c$ then

$${}^\phi\Delta_i^Y = \int_0^\infty Y'(t) I_\phi^B(i, \overline{\mathbf{F}}(t))\, dF_i(t) \qquad (4.7.3)$$

Proof:

From the definition of $\overline{G}_t(t)$ and (4.7.1), we have that

$$^{\phi}\Delta_i^Y = \int_0^{\infty} \left\{ \left[F_i(t+c) - F_i(t) \right] / c \right\} I_{\phi}^B\left(i, \overline{\mathbf{F}}(t)\right) dY(t)$$

By the choice of c being arbitrarily small, it follows that

$$^{\phi}\Delta_i^Y = \int_0^{\infty} f_i(t) I_{\phi}^B\left(i, \overline{\mathbf{F}}(t)\right) dY(t) = \int_0^{\infty} Y'(t) I_{\phi}^B\left(i, \overline{\mathbf{F}}(t)\right) dF_i(t)$$

As with Theorem 4.6.4, we can alternatively prove Theorem 4.7.3 using $\overline{G}_i(t) = \overline{F}_i(t-c)$. The proof is analogous to that of Theorem 4.6.5.

Theorem 4.7.4:

We have that $E\left[Y'(T)\right] = \sum_{j=1}^{n} {}^{\phi}\Delta_j^Y = \sum_{j=1}^{n} \int_0^{\infty} Y'(t) I_{\phi}^B\left(i, \overline{\mathbf{F}}(t)\right) dF_j(t)$ (4.7.4)

Proof:

$E\left[Y'(T)\right]$ represents the expectation of $Y'(T)$ under the system lifetime distribution $h_{\phi}\left(\overline{\mathbf{F}}(t)\right)$ i.e. $E\left[Y'(T)\right] = -\int_0^{\infty} Y'(t)\, dh_{\phi}\left(\overline{\mathbf{F}}(t)\right)$. Now, by the multivariate chain rule of differentiation we have

$$\frac{dh_{\phi}\left(\overline{\mathbf{F}}(t)\right)}{dt} = \sum_{j=1}^{n} \frac{dh_{\phi}\left(\overline{\mathbf{F}}(t)\right)}{d\overline{F}_j(t)} \frac{d\overline{F}_j(t)}{dt} = -\sum_{j=1}^{n} I_{\phi}^B\left(i, \overline{\mathbf{F}}(t)\right) \frac{dF_j(t)}{dt}$$

Hence $dh_{\phi}\left(\overline{\mathbf{F}}(t)\right) = -\sum_{j=1}^{n} I_{\phi}^B\left(i, \overline{\mathbf{F}}(t)\right) dF_j(t)$ and (4.7.5) follows immediately.

Definition 4.7.5: *Xie's Expected Yield Importance*

We define Xie's expected yield importance for component c_i within a system with structure function ϕ under yield function $Y(t)$ as:

$$I_{\phi}^Y\left(i, \overline{\mathbf{F}}(t)\right) = {}^{\phi}\Delta_i^Y \Big/ \sum_{j=1}^{n} {}^{\phi}\Delta_j^Y = {}^{\phi}\Delta_i^Y / E\left[Y'(T)\right] \qquad (4.7.5)$$

where ${}^{\phi}\Delta_i^Y$ is defined as in (4.7.3) and $E\left[Y'(T)\right]$ is defined by (4.7.4).

Xie went on to define the conditions under which his expected yield importance, Barlow – Proschan reliability importance and Bergman's infinitesimal scale change importance are equivalent.

Theorem 4.7.6: *Equivalence of Xie's Expected Yield Importance and Barlow-Proschan Reliability Importance*

For $Y(t) = t$ we have that $I_{\phi}^{Y}\left(i, \overline{\mathbf{F}}(t)\right) = I_{\phi}^{B-P}\left(i, \overline{\mathbf{F}}(t)\right)$.

Proof:

We have that $Y'(t) = 1$ and thus by (4.7.3) ${}^{\phi}\Delta_i^Y = \int_0^{\infty} I_{\phi}^{B}\left(i, \overline{\mathbf{F}}(t)\right) dF_i(t)$. The result follows from Definition 4.7.4, Definition 4.2 and Theorem 4.3.

Theorem 4.7.7: *Equivalence of Xie's Expected Yield Importance and Bergman's Infinitesimal Scale Change Importance*

For $Y(t) = t^2$ we have that $I_{\phi}^{Y}\left(i, \overline{\mathbf{F}}(t)\right) = I_{\phi}^{BISC}\left(i, \overline{\mathbf{F}}(t)\right)$.

Proof:

We have that $Y'(t) = 2t$ and thus by (4.7.3) ${}^{\phi}\Delta_i^Y = 2\int_0^{\infty} t I_{\phi}^{B}\left(i, \overline{\mathbf{F}}(t)\right) dF_i(t) = 2 \times {}^{\phi}\Delta_i$ where ${}^{\phi}\Delta_i$ is defined as (4.6.3). The result follows from Definition 4.7.4 and Definition 4.6.7.

Xie also analysed the expected yield importance under series and parallel systems.

Theorem 4.7.8:

i. If component c_i is in series with the rest of the system with structure function ϕ, then ${}^{\phi}\Delta_i^Y = \int_0^{\infty} Y'(t) h_{\phi}\left(\overline{\mathbf{F}}(t)\right) h_i(t)\, dt$.

ii. If component c_i is in parallel with the rest of the system with structure function ϕ, then ${}^{\phi}\Delta_i^Y = \int_0^{\infty} Y'(t)\left\{1 - h_{\phi}\left(\overline{\mathbf{F}}(t)\right)\right\}\left\{f_i(t)/F_i(t)\right\} dt$.

where $h_i(t)$ denotes the hazard rate function of component c_i.

Proof:

Consider that component c_i is in series with the rest of the system, then we know that $h_\phi\left(\overline{\mathbf{F}}(t)\right) = \prod_{j=1}^{n} F_j(t)$ and $I_\phi^B\left(i, \overline{\mathbf{F}}(t)\right) = \prod_{\substack{j=1 \\ j\neq i}}^{n} \overline{F}_j(t) = h_\phi\left(\overline{\mathbf{F}}(t)\right) / \overline{F}_i(t)$. Hence

$$^{\phi}\Delta_i^Y = \int_0^\infty Y'(t) \frac{h_\phi\left(\overline{\mathbf{F}}(t)\right)}{\overline{F}_i(t)} dF_i(t) = \int_0^\infty Y'(t) h_\phi\left(\overline{\mathbf{F}}(t)\right) h_i(t) dt .$$

Consider that component c_i is in parallel with the rest of the system, then

$h_\phi\left(\overline{\mathbf{F}}(t)\right) = \coprod_{j=1}^{n} \overline{F}_j(t) = 1 - \prod_{j=1}^{n} F_j(t)$ and

$$I_\phi^B\left(i, \overline{\mathbf{F}}(t)\right) = 1 - \left\{ \coprod_{\substack{j=1 \\ j\neq i}}^{n} \overline{F}_j(t) \right\} = \prod_{\substack{j=1 \\ j\neq i}}^{n} F_j(t) = \frac{1 - h_\phi\left(\overline{\mathbf{F}}(t)\right)}{F_i(t)}$$

Hence $^{\phi}\Delta_i^Y = \int_0^\infty Y'(t) \frac{1 - h_\phi\left(\overline{\mathbf{F}}(t)\right)}{F_i(t)} dF_i(t) = \int_0^\infty Y'(t) \left\{1 - h_\phi\left(\overline{\mathbf{F}}(t)\right)\right\} \frac{f_i(t)}{F_i(t)} dt$.

Finally, Xie also defined the expected yield measure for modules within systems.

Definition 4.7.9: *Xie's Expected Yield Importance for a System with Modules*

We define Xie's expected yield importance for module m_k within a system with structure function ψ under yield function $Y(t)$ as:

$$I_\psi^Y\left(k, \overline{\mathbf{F}}(t)\right) = {}^{\psi}\Delta_k^Y \Big/ \sum_{j=1}^{m} {}^{\psi}\Delta_j^Y \qquad (4.7.5)$$

where $^{\psi}\Delta_k^Y = -\int_0^\infty Y'(t) I_\psi^B\left(k, \overline{\mathbf{F}}(t)\right) dh_{\phi_k}\left(\overline{\mathbf{F}}(t)\right)$.

Theorem 4.7.10:

$$I_\psi^Y\left(k, \overline{\mathbf{F}}(t)\right) = \sum_{l \in m_k} I_\phi^Y\left(l, \overline{\mathbf{F}}(t)\right)$$

Proof:

By the multivariate chain rule of differentiation and Theorem (3.1.?) we have that

$$-I_{\psi}^{B}\left(k,\overline{\mathbf{F}}(t)\right)\frac{dh_{\phi_k}\left(\mathbf{F}(t)\right)}{dt}=-I_{\psi}^{B}\left(k,\overline{\mathbf{F}}(t)\right)\sum_{l\in m_k}\frac{dh_{\phi_k}\left(\mathbf{F}(t)\right)}{d\overline{F}_l(t)}\frac{d\overline{F}_l(t)}{dt}$$

$$=\sum_{l\in m_k}I_{\psi}^{B}\left(k,\overline{\mathbf{F}}(t)\right)I_{\phi_k}^{B}\left(l,\overline{\mathbf{F}}(t)\right)\frac{dF_l(t)}{dt}=\sum_{l\in m_k}I_{\phi}^{B}\left(l,\overline{\mathbf{F}}(t)\right)\frac{dF_l(t)}{dt}$$

Hence

$${}^{\psi}\Delta_k^Y=-\int_0^{\infty}Y'(t)I_{\psi}^{B}\left(k,\overline{\mathbf{F}}(t)\right)dh_{\phi_k}\left(\overline{\mathbf{F}}(t)\right)=\int_0^{\infty}Y'(t)\sum_{l\in m_k}I_{\phi}^{B}\left(l,\overline{\mathbf{F}}(t)\right)dF_l(t)=\sum_{l\in m_k}{}^{\phi}\Delta_l^Y\,.$$

Also, we note that $\sum_{j=1}^{m}\sum_{l\in m_k}{}^{\phi}\Delta_l^Y=\sum_{j=1}^{n}{}^{\phi}\Delta_j^Y$ and therefore (4.7.6) becomes

$$I_{\psi}^{Y}\left(k,\overline{\mathbf{F}}(t)\right)={}^{\psi}\Delta_k^Y\Big/\sum_{j=1}^{m}{}^{\psi}\Delta_j^Y=\frac{\sum_{l\in m_k}{}^{\phi}\Delta_l^Y}{\sum_{j=1}^{n}{}^{\phi}\Delta_j^Y}=\sum_{l\in m_k}I_{\phi}^{Y}\left(l,\overline{\mathbf{F}}(t)\right).$$

5 Bridge Structure Example

5.1 Introduction

Figure 5.1.1 below represents a well-known bridge structure system of five components:

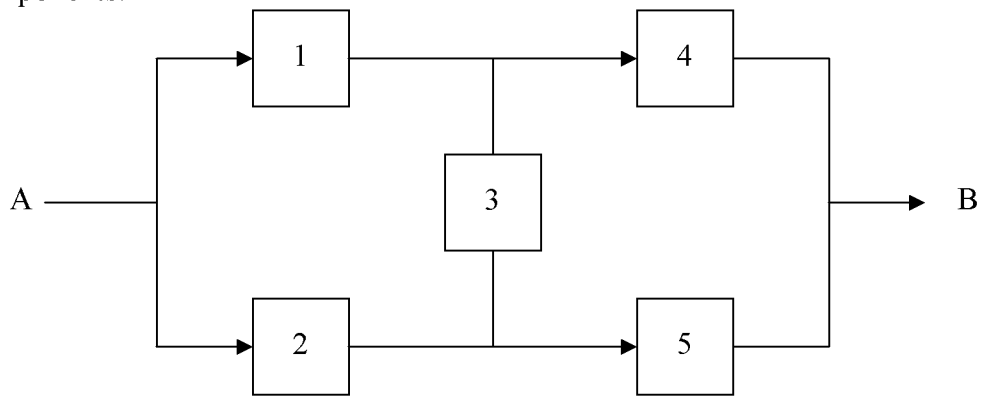

Figure 5.1.1: *Representation of a bridge structure system*

The signal travelling through the bridge structure needs to travel for point A to point B. The signal will travel unidirectional from left to right through components c_1, c_2, c_4 and c_5. The signal travel through component c_3 may be bidirectional, hence component c_3 "bridges' the signal flow from components c_1 to c_4 with the signal flow from components c_2 to c_4. When the signal flows through c_1, c_2 and c_4 but not c_5, we will assume that the signal flowing through c_3 will be from c_2 to c_4. Similarly, when the signal flows through c_1, c_2 and c_5 but not c_4, we will assume that the signal flowing through c_3 will be from c_2 to c_4. When all other components are functioning, we will assume that c_3 becomes an irrelevant component and does not interfere with the operation of the other components.

We will assume that the lifetime T_i, in hours, of component c_i is exponentially distributed with mean lifetime, μ_i i.e. $\overline{F}_i(t) = e^{-\lambda_i t}$ and $f_i(t) = \lambda_i e^{-\lambda_i t}$ with

$\lambda_i = \mu_i^{-1}$. The exact values, in hours, of each λ_i is $\lambda_1 = \lambda_4 = 10 \times 10^{-6}$ and $\lambda_2 = \lambda_3 = \lambda_5 = 100 \times 10^{-6}$.

We wish to determine the relative importance that components c_1, c_2, c_3, c_4 and c_5 have with reference to each other i.e. by ranking the components in decreasing order of importance. As such, we will not be interested in any joint importance between components. Nonetheless, we will calculate these measures as they will give insight into how the system components relate to each other operates. However, we will not calculate certain other measures since there may be insufficient information to do so (e.g. the maintenance prioritisation measures) or the measures already have parallel definitions with other measures (e.g. the risk reduction/achievement worth importance measures)

In order to determine the importance of components, we will need to describe our bridge structure system in terms of the notation developed in Chapter 2.

To find the structure function of the system, we make use of (2.1.2) and consider the system when component c_3 is functioning or not. Figure 5.1.2 and 5.1.3 describe these cases:

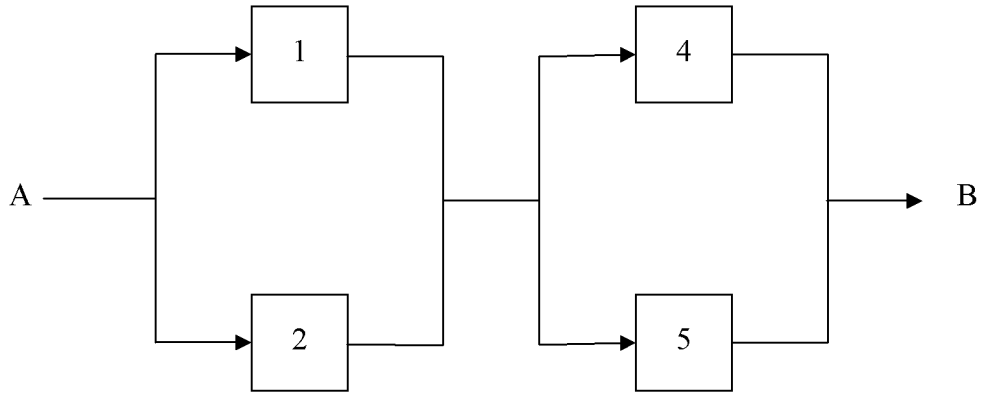

Figure 5.1.2: *Representation of a bridge structure system when c_3 is functioning*

It follows that $\phi(1_3, \mathbf{x}) = (1 - \overline{x}_1\overline{x}_2)(1 - \overline{x}_4\overline{x}_5)$ and $h_\phi(1_3, \mathbf{p}) = (1 - q_1q_2)(1 - q_4q_5)$ from (2.1.5).

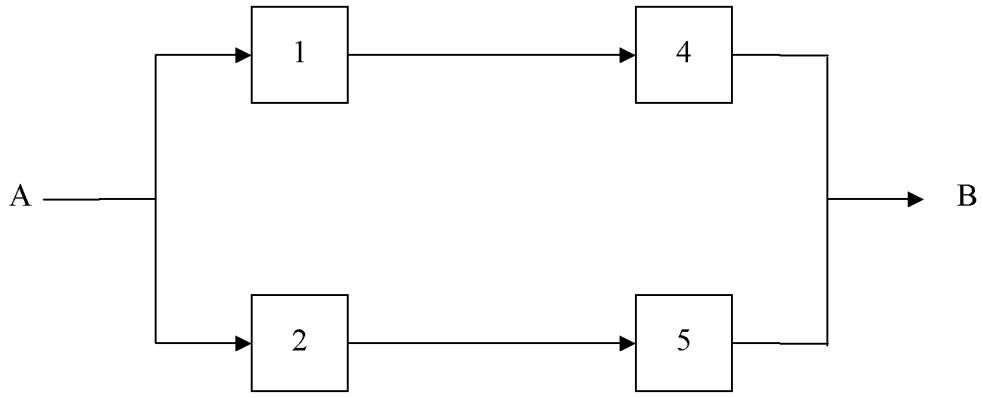

Figure 5.1.3: *Representation of a bridge structure system when c_3 is failed*

Thus $\phi(0_3, \mathbf{x}) = \left(1-(1-x_1x_4)(1-x_2x_5)\right)$ and $h_\phi(0_3, \mathbf{p}) = \left(1-(1-p_1p_4)(1-p_2p_5)\right)$.

Therefore

$$\phi(\mathbf{x}) = x_3(1-\bar{x}_1\bar{x}_2)(1-\bar{x}_4\bar{x}_5) + \bar{x}_3\left(1-(1-x_1x_4)(1-x_2x_5)\right)$$
$$h_\phi(\mathbf{p}) = p_3(1-q_1q_2)(1-q_4q_5) + q_3\left(1-(1-p_1p_4)(1-p_2p_5)\right).$$

Furthermore, we will assume that all time independent measures of importance will be evaluated at time $t = 1\,000$. Hence we have that

$$\bar{F}_1(1\,000) = p_1 = \bar{F}_4(1\,000) = p_4 = 0.990049834$$
$$\bar{F}_2(1\,000) = p_2 = \bar{F}_3(1\,000) = p_3 = \bar{F}_5(1\,000) = p_5 = 0.904837418$$

By inspection of Figure 5.1.1 we define the minimal path and cut sets of the system to be ${}^{\phi}PS_1^m = \{1,4\}$, ${}^{\phi}PS_2^m = \{2,5\}$, ${}^{\phi}PS_3^m = \{1,3,5\}$, ${}^{\phi}PS_4^m = \{2,3,4\}$, ${}^{\phi}CS_1^m = \{1,2\}$, ${}^{\phi}CS_2^m = \{4,5\}$, ${}^{\phi}CS_3^m = \{1,3,5\}$ and ${}^{\phi}CS_4^m = \{2,3,4\}$.

Note that ${}^{\phi}PS_3^m = {}^{\phi}CS_3^m$ and ${}^{\phi}PS_4^m = {}^{\phi}CS_4^m$.

Before we actually begin ranking the order of importance of components, we should establish intuitively the results that we would expect.

Structurally, the roles played by components c_1 and c_2 within the system are essentially the same, so in terms of structural importance, c_1 and c_2 should be equally important. However, as component c_1 has a higher availability than c_2, c_1 should have greater reliability importance than c_2.

A similar argument can be applied to the roles played by components c_4 and c_5.

The importance of component c_1 relative to c_4 is influenced by role that c_3 plays in the functioning of the system. As c_3 bridges the signal flow emanating from either c_1 or c_2 to either c_4 or c_5, we would expect that the failure of c_1 to be more detrimental to the system than the failure of c_4 if the availability of c_2 is lower than that of c_5. However, as c_2, c_3 and c_5 have equal availability, we expect c_1 and c_4 to have equal importance.

Again, a similar argument can be applied to the importance of components c_2 and c_5.

Therefore, it of particular interest to determine how the importance of c_3 compares to the other components.

5.2 Birnbaum Importance

From (3.1.5) we obtain:

$$I_\phi^B(1,\mathbf{p}) = q_2p_3(1-q_4q_5)+q_3p_4(1-p_2p_5) = 0.103103541$$

$$I_\phi^B(2,\mathbf{p}) = q_1p_3(1-q_4q_5)+q_3p_5(1-p_1p_4) = 0.010699784$$

$$I_\phi^B(3,\mathbf{p}) = (1-q_1q_2)(1-q_4q_5)+(1-p_1p_4)(1-p_2p_5)-1 = 0.001696501$$

$$I_\phi^B(4,\mathbf{p}) = p_3q_5(1-q_1q_2)+p_1q_3(1-p_2p_5) = 0.103103541$$

$$I_\phi^B(5,\mathbf{p}) = p_3q_4(1-q_1q_2)+p_2q_3(1-p_1p_4) = 0.010699784$$

Thus, according to Birnbaum reliability importance, components c_1 and c_4 are equally most importance, followed component c_2 and c_5, themselves equally important, with c_3 being the least important. This is thus an expected result.

From (3.1.10) we have $I_\phi^B(1) = I_\phi^B(2) = I_\phi^B(4) = I_\phi^B(5) = \frac{6}{16}$ and $I_\phi^B(3) = \frac{2}{16}$. Therefore, Birnbaum's structural importance gives the same ranking of importance as Birnbaum's reliability importance.

5.3 Vesely – Fussell Importance

From the minimal cut sets of the system and (3.2.1):

$$I_\phi^{V-F}(1,\mathbf{p}) = \frac{q_1(q_2 + q_3q_5 - q_2q_3q_5)}{1 - p_3(1-q_1q_2)(1-q_4q_5) - q_3(1-p_1p_4)(1-p_2p_5)} = 0.508961317$$

$$I_\phi^{V-F}(2,\mathbf{p}) = \frac{q_2(q_1 + q_3q_4 - q_1q_3q_4)}{1 - p_3(1-q_1q_2)(1-q_4q_5) - q_3(1-p_1p_4)(1-p_2p_5)} = 0.505223665$$

$$I_\phi^{V-F}(3,\mathbf{p}) = \frac{q_3(q_1q_5 + q_2q_4 - q_1q_2q_4q_5)}{1 - p_3(1-q_1q_2)(1-q_4q_5) - q_3(1-p_1p_4)(1-p_2p_5)} = 0.087683991$$

$$I_\phi^{V-F}(4,\mathbf{p}) = \frac{q_4(q_5 + q_2q_3 - q_2q_3q_5)}{1 - p_3(1-q_1q_2)(1-q_4q_5) - q_3(1-p_1p_4)(1-p_2p_5)} = 0.508961317$$

$$I_\phi^{V-F}(5,\mathbf{p}) = \frac{q_5(q_4 + q_1q_3 - q_1q_3q_4)}{1 - p_3(1-q_1q_2)(1-q_4q_5) - q_3(1-p_1p_4)(1-p_2p_5)} = 0.505223665$$

By (3.2.2) it follows that $I_\phi^{V-F}(1) = I_\phi^{V-F}(2) = I_\phi^{V-F}(4) = I_\phi^{V-F}(5) = \frac{5}{32}$ and $I_\phi^{V-F}(3) = \frac{5}{64}$.

So we have that both Vesely – Fussell reliability and structural importance accords the same ranking as that of Birnbaum reliability and structural importance.

5.4 Criticality Importance

From (3.3.1)

$$I_{\phi}^{CR}(1,\mathbf{p}) = \frac{q_1\left(q_2p_3(1-q_4q_5)+q_3p_4(1-p_2p_5)\right)}{1-p_3(1-q_1q_2)(1-q_4q_5)-q_3(1-p_1p_4)(1-p_2p_5)} = 0.499386872$$

$$I_{\phi}^{CR}(2,\mathbf{p}) = \frac{q_2\left(q_1p_3(1-q_4q_5)+q_3p_5(1-p_1p_4)\right)}{1-p_3(1-q_1q_2)(1-q_4q_5)-q_3(1-p_1p_4)(1-p_2p_5)} = 0.495649224$$

$$I_{\phi}^{CR}(3,\mathbf{p}) = \frac{q_3\left((1-q_1q_2)(1-q_4q_5)+(1-p_1p_4)(1-p_2p_5)-1\right)}{1-p_3(1-q_1q_2)(1-q_4q_5)-q_3(1-p_1p_4)(1-p_2p_5)} = 0.078587512$$

$$I_{\phi}^{CR}(4,\mathbf{p}) = \frac{q_4\left(p_3q_5(1-q_1q_2)+p_1q_3(1-p_2p_5)\right)}{1-p_3(1-q_1q_2)(1-q_4q_5)-q_3(1-p_1p_4)(1-p_2p_5)} = 0.499386872$$

$$I_{\phi}^{CR}(5,\mathbf{p}) = \frac{q_2\left(p_3q_4(1-q_1q_2)+p_2q_3(1-p_1p_4)\right)}{1-p_3(1-q_1q_2)(1-q_4q_5)-q_3(1-p_1p_4)(1-p_2p_5)} = 0.495649224$$

So we have criticality importance imposes the same ranking as that of Birnbaum reliability importance. However, this ranking is not as clear cut as before because of the relatively close values found for the criticality importance between components c_1, c_2, c_4 and c_5.

5.5 Ryabinin – Cherkesov Importance

From (3.4.1) and (3.4.2),

$$I_{\phi}^{R-Ch}(1,\mathbf{p}) = p_1\left(q_2p_3(1-q_4q_5)+q_3p_4(1-p_2p_5)\right) = 0.102077644$$

$$I_{\phi}^{R-Ch}(2,\mathbf{p}) = p_2\left(q_1p_3(1-q_4q_5)+q_3p_5(1-p_1p_4)\right) = 0.009681565$$

$$I_{\phi}^{R-Ch}(3,\mathbf{p}) = p_3\left((1-q_1q_2)(1-q_4q_5)+(1-p_1p_4)(1-p_2p_5)-1\right) = 0.001535058$$

$$I_{\phi}^{R-Ch}(4,\mathbf{p}) = p_4\left(p_3q_5(1-q_1q_2)+p_1q_3(1-p_2p_5)\right) = 0.1020774644$$

$$I_{\phi}^{R-Ch}(5,\mathbf{p}) = p_5\left(p_3q_4(1-q_1q_2)+p_2q_3(1-p_1p_4)\right) = 0.009681565$$

$$I_{\phi}^{R-Ch*}(1,\mathbf{p}) = q_1\left(q_2p_3(1-q_4q_5)+q_3p_4(1-p_2p_5)\right) = 0.001025897$$

$$I_{\phi}^{R-Ch*}(2,\mathbf{p}) = q_2\left(q_1p_3(1-q_4q_5)+q_3p_5(1-p_1p_4)\right) = 0.001018219$$

$$I_{\phi}^{R-Ch*}(3,\mathbf{p}) = q_3\left((1-q_1q_2)(1-q_4q_5)+(1-p_1p_4)(1-p_2p_5)-1\right) = 0.000161443$$

$$I_{\phi}^{R-Ch*}(4,\mathbf{p}) = q_4\left(p_3q_5(1-q_1q_2)+p_1q_3(1-p_2p_5)\right) = 0.001025897$$

$$I_{\phi}^{R-Ch*}(5,\mathbf{p}) = q_5\left(p_3q_4(1-q_1q_2)+p_2q_3(1-p_1p_4)\right) = 0.001018219$$

Hence, the Ryabinin – Cherkesov measures impose the same ranking as that of Birnbaum reliability importance. As the Ryabinin – Cherkesov * importance is related to the criticality importance measure, it suffers also from the ranking of components c_1, c_2, c_4 and c_5 not being clear cut. In fact, one could even suggest that these components have equal importance.

5.6 Butler's Cut and Path Importance

From the minimal cut sets of the system and Definition 3.6.1 we have ${}^{\phi}d_{1,2}^{i} = {}^{\phi}d_{1,3}^{i} = {}^{\phi}d_{2,5}^{i} = {}^{\phi}d_{4,5}^{i} = 1$ and ${}^{\phi}d_{2,4}^{i} = {}^{\phi}d_{3,5}^{i} = 4$ for $i = 1,2,4,5$ whilst ${}^{\phi}d_{1,3}^{3} = 2$, ${}^{\phi}d_{2,4}^{3} = {}^{\phi}d_{3,5}^{3} = 4$ and ${}^{\phi}d_{2,5}^{3} = {}^{\phi}d_{4,5}^{3} = 1$. Hence ${}^{\phi}\mathbf{b}^{i} = (0,1,1-4,2)$ for $i = 1,2,4,5$, ${}^{\phi}\mathbf{b}^{3} = (0,0,2,-4,2)$ and $c_1 =_{\phi}^{BC} c_2 =_{\phi}^{BC} c_4 =_{\phi}^{BC} c_5 >_{\phi}^{BC} c_3$.

Therefore, under Butler's cut importance, components c_1, c_2 c_4 and c_5 are equally most important with c_3 being the least important.

From the minimal path sets of the system and Definition 3.6.7 we have ${}^{\phi}\mathbb{d}_{1,2}^{i} = {}^{\phi}\mathbb{d}_{1,3}^{i} = {}^{\phi}\mathbb{d}_{2,5}^{i} = {}^{\phi}\mathbb{d}_{4,5}^{i} = 1$ and ${}^{\phi}\mathbb{d}_{2,4}^{i} = {}^{\phi}\mathbb{d}_{3,5}^{i} = 4$ for $i = 1,2,4,5$ whilst ${}^{\phi}\mathbb{d}_{1,3}^{3} = 2$, ${}^{\phi}\mathbb{d}_{2,4}^{3} = {}^{\phi}\mathbb{d}_{3,5}^{3} = 4$ and ${}^{\phi}\mathbb{d}_{2,5}^{3} = {}^{\phi}\mathbb{d}_{4,5}^{3} = 1$. Hence ${}^{\phi}\mathbb{b}^{i} = (0,1,1-4,2)$ for $i = 1,2,4,5$, ${}^{\phi}\mathbb{b}^{3} = (0,0,2,-4,2)$ and $c_1 =_{\phi}^{BP} c_2 =_{\phi}^{BP} c_4 =_{\phi}^{BP} c_5 >_{\phi}^{BP} c_3$ giving the same ranking as Butler's cut importance.

5.7 Vesely – Fussell Cut and Path Importance

From the minimal cut sets of the system and Definition 3.7.1 we have ${}^{\phi}g^{i}_{1,2} = {}^{\phi}g^{i}_{1,3} = {}^{\phi}g^{i}_{2,4} = 1$ for $i = 1,2,4,5$ whilst ${}^{\phi}g^{3}_{1,3} = 2$ and ${}^{\phi}g^{3}_{2,5} = 1$.

Hence ${}^{\phi}\mathbf{f}^{i} = (0,1,1-1,0)$ for $i = 1,2,4,5$, ${}^{\phi}\mathbf{f}^{3} = (0,0,2,0,-1)$ and we have $c_1 =^{V-FC}_{\phi} c_2 =^{V-FC}_{\phi} c_4 =^{V-FC}_{\phi} c_5 >^{V-FC}_{\phi} c_3$. From the minimal path sets of the system and Definition 3.7.5 we have ${}^{\phi}\boldsymbol{g}^{i}_{1,2} = {}^{\phi}\boldsymbol{g}^{i}_{1,3} = {}^{\phi}\boldsymbol{g}^{i}_{2,4} = 1$ for $i = 1,2,4,5$ with ${}^{\phi}\boldsymbol{g}^{3}_{1,3} = 2$ and ${}^{\phi}\boldsymbol{g}^{3}_{2,5} = 1$. Hence ${}^{\phi}\mathbf{f}^{i} = (0,1,1-1,0)$ for $i = 1,2,4,5$, ${}^{\phi}\mathbf{f}^{3} = (0,0,2,0,-1)$ and we have $c_1 =^{V-FP}_{\phi} c_2 =^{V-FP}_{\phi} c_4 =^{V-FP}_{\phi} c_5 >^{V-FP}_{\phi} c_3$.

Therefore, both Vesely – Fussell cut and path importance gives the same importance ranking as Butler's cut importance.

5.8 Joint Reliability Importance

From (3.3.3) we have

$$I^{JR}_{\phi}(1,2,\mathbf{p}) = -\left(q_3p_4p_5 + p_3(1-q_4q_5)\right) = -0.989230532$$

$$I^{JR}_{\phi}(1,3,\mathbf{p}) = q_2(1-q_4q_5) - p_4(1-p_2p_5) = -0.084393114$$

$$I^{JR}_{\phi}(1,4,\mathbf{p}) = q_2p_3q_5 + q_3(1-p_2p_5) - q_3p_4 = -0.068771516$$

$$I^{JR}_{\phi}(1,5,\mathbf{p}) = q_2p_3 - q_3p_4 = -0.08109033$$

$$I^{JR}_{\phi}(2,3,\mathbf{p}) = q_1(1-q_4q_5) - p_5(1-p_1p_4) = -0.07976237$$

$$I^{JR}_{\phi}(2,4,\mathbf{p}) = q_1p_3q_5 + q_1q_3p_5 - q_3q_5 = -0.007342366$$

$$I^{JR}_{\phi}(2,5,\mathbf{p}) = q_1p_3q_4 + q_3(1-p_1p_4) = 0.00197393$$

$$I^{JR}_{\phi}(3,4,\mathbf{p}) = q_5(1-q_1q_2) - p_1(1-p_2p_5) = -0.084393114$$

$$I^{JR}_{\phi}(3,5,\mathbf{p}) = q_4(1-q_1q_2) - p_2(1-p_1p_4) = -0.07976237$$

$$I^{JR}_{\phi}(4,5,\mathbf{p}) = -\left(p_1p_2q_3 + p_3(1-q_1q_2)\right) = -0.989230532$$

As we see, the only joint reliability importance of note are those between components c_1, c_2 and components c_4, c_5 respectively. Intuitively, this makes sense since the failure of c_2 (c_5) would mean that the system would have to rely upon c_1 (c_4) more heavily to function and vice versa.

5.9 Criticality of Nodes Ranking

By inspection and Definition 3.10.1, we find that no ranking can be determined between components c_1, c_2, c_4 and c_5. The required results to arrive that this conclusion are:

$$\phi((1,0,0,0,1)) < \phi((0,1,0,0,1)) \qquad \phi((1,0,0,1,0)) > \phi((0,1,0,1,0))$$

$$\phi((1,1,1,0,0)) < \phi((0,1,1,1,0)) \qquad \phi((1,0,1,0,1)) > \phi((0,0,1,1,1))$$

$$\phi((1,1,0,0,0)) < \phi((0,1,0,0,1)) \qquad \phi((1,0,0,1,0)) > \phi((0,0,0,1,1))$$

$$\phi((1,1,0,0,0)) < \phi((1,0,0,1,0)) \qquad \phi((0,1,0,0,1)) > \phi((0,0,0,1,1))$$

$$\phi((1,1,1,0,0)) < \phi((1,0,1,0,1)) \qquad \phi((0,1,1,1,0)) > \phi((0,0,1,1,1))$$

$$\phi((0,1,0,1,0)) < \phi((0,1,0,0,1)) \qquad \phi((1,0,0,1,0)) > \phi((1,0,0,0,1))$$

For the criticality of nodes ranking between component c_3 and the other components, we apply Theorem 3.10.7 condition ii i.e. we are required to determine sets ${}^{\phi}S^m$ and ${}^{\phi}S_0^m$ such that the condition is met. Table 5.9.1 lists these sets for each component compared to c_3.

		${}^{\phi}S^m$	${}^{\phi}S_0^m$
Component c_i	1	$\{2,4\}$	$\{2\}$
	2	$\{1,5\}$	$\{1\}$
	3	$\{1,5\}$	$\{5\}$
	4	$\{2,4\}$	$\{4\}$

Table 5.9.1: *Required sets needed to apply Theorem 3.10.7 to bridge structure system*

Hence we have that component c_3 is the least important, as before.

5.10 Meng's Criticality Ranking

By Definition 3.11.1, we need to compute $I_\phi^B(i,(\alpha_k,\mathbf{p}))-I_\phi^B(k,(\alpha_i,\mathbf{p}))$ for components c_i and c_k in order to Meng's criticality ranking i.e. $I_\phi^B(i,(\alpha_k,\mathbf{p}))-I_\phi^B(k,(\alpha_i,\mathbf{p}))>0$ implies $c_i >_\phi^{MC} c_k$. In Table 5.10.1 we calculate the value $I_\phi^B(i,(\alpha_k,\mathbf{p}))-I_\phi^B(k,(\alpha_i,\mathbf{p}))$ in terms of component availabilities as well as specify the necessary condition to have $I_\phi^B(i,(\alpha_k,\mathbf{p}))-I_\phi^B(k,(\alpha_i,\mathbf{p}))>0$.

Component		Value of	Condition needed for	Ranking
c_i	c_k	$I_\phi^B(i,(\alpha_k,\mathbf{p}))-I_\phi^B(k,(\alpha_i,\mathbf{p}))$	$I_\phi^B(i,(\alpha_k,\mathbf{p}))-I_\phi^B(k,(\alpha_i,\mathbf{p}))>0$	
1	4	$p_3(q_2(p_5+\alpha q_5)-p_5(p_2+\alpha q_2))$	$p_5>p_2$	$c_1 =_\phi^{MC} c_4$
1	2	$p_3(p_4(1-\alpha p_5)-p_5(1-\alpha p_4))$	$p_4>p_5$	$c_1 >_\phi^{MC} c_2$
2	5	$p_3(q_1(p_4+\alpha q_4)-p_4(p_1+\alpha q_1))$	$p_4>p_1$	$c_2 =_\phi^{MC} c_5$
2	3	$p_5(1-p_1p_4)+p_1p_4-p_1(1-q_4q_5)$	Substitute and check	$c_2 >_\phi^{MC} c_3$

Table 5.10.1: *Calculation of Meng's criticality ranking for bridge structure system*

Thus, we have $c_1 =_\phi^{MC} c_4 >_\phi^{MC} c_2 =_\phi^{MC} c_5 >_\phi^{MC} c_3$ which is the same ranking imposed by Birnbaum's reliability measure.

From Theorem 3.11.6, we now can obtain the criticality of nodes impoprtance ranking for components c_1, c_2, c_4 and c_5.

5.11 Meng's Criticality Importance

Using Theorem 3.12.14 and Lemma 2.3.6

$$I_{\phi}^{MC}(1,\mathbf{p}) = \frac{p_1(p_4 + p_3p_5 - p_3p_4p_5)}{p_3(1-q_1q_2)(1-q_4q_5) + q_3(1-(1-p_1p_4)(1-p_2p_5))} = 0.990298505$$

$$I_{\phi}^{MC}(2,\mathbf{p}) = \frac{p_2(p_5 + p_3p_4 - p_3p_4p_5)}{p_3(1-q_1q_2)(1-q_4q_5) + q_3(1-(1-p_1p_4)(1-p_2p_5))} = 0.897712225$$

$$I_{\phi}^{MC}(3,\mathbf{p}) = \frac{p_3(p_1p_5 + p_2p_4 - p_1p_2p_4p_5)}{p_3(1-q_1q_2)(1-q_4q_5) + q_3(1-(1-p_1p_4)(1-p_2p_5))} = 0.0.896861891$$

$$I_{\phi}^{MC}(4,\mathbf{p}) = \frac{p_4(p_1 + p_2p_3 - p_1p_2p_3)}{p_3(1-q_1q_2)(1-q_4q_5) + q_3(1-(1-p_1p_4)(1-p_2p_5))} = 0.990298505$$

$$I_{\phi}^{MC}(5,\mathbf{p}) = \frac{p_5(p_2 + p_1p_3 - p_1p_2p_3)}{p_3(1-q_1q_2)(1-q_4q_5) + q_3(1-(1-p_1p_4)(1-p_2p_5))} = 0.897712225$$

Hence, Meng's criticality importance imposes the same ranking as Birnbaum's reliability importance.

5.12 Link and Path Set Cut Set Importance

As $h_{\phi}(\mathbf{p}) = p_3(1-q_1q_2)(1-q_4q_5) + q_3(1-(1-p_1p_4)(1-p_2p_5))$ we have that

$$h_{\phi}(1_1,\mathbf{p}) = p_3(1-q_4q_5) + q_3(1-q_4(1-p_2p_5))$$

$$h_{\phi}(1_2,\mathbf{p}) = p_3(1-q_4q_5) + q_3(1-q_5(1-p_1p_4))$$

$$h_{\phi}(1_3,\mathbf{p}) = (1-q_1q_2)(1-q_4q_5)$$

$$h_{\phi}(1_4,\mathbf{p}) = p_3(1-q_1q_2) + q_3(1-q_1(1-p_2p_5))$$

$$h_{\phi}(1_5,\mathbf{p}) = p_3(1-q_1q_2) + q_3(1-q_2(1-p_1p_4))$$

$$h_{\phi}(0_1,\mathbf{p}) = p_3p_2(1-q_4q_5) + q_3p_2p_5$$

$$h_{\phi}(0_2,\mathbf{p}) = p_1p_3(1-q_4q_5) + q_3p_1p_4$$

$$h_{\phi}(0_3,\mathbf{p}) = (1-(1-p_1p_4)(1-p_2p_5))$$

$$h_\phi(0_4,\mathbf{p}) = p_3p_5(1-q_1q_2)+q_3p_2p_5$$

$$h_\phi(0_5,\mathbf{p}) = p_3p_4(1-q_1q_2)+q_3p_1p_4$$

In order to determine link importance, the necessary conditions for which Definition 3.13.1 holds is tabulated in Table 5.12.1 as well as the link importance ranking:

Component		Condition needed for	Condition needed for	Ranking
c_i	c_k	$h_\phi(1_i,\mathbf{p}) \geq h_\phi(1_k,\mathbf{p})$	$h_\phi(0_i,\mathbf{p}) \leq h_\phi(0_k,\mathbf{p})$	
1	4	$p_3(q_1q_2-q_4q_5)$ $+q_3(q_1-q_4)(1-p_2p_5)\geq 0$	$p_5(1-q_1q_2)$ $-p_2(1-q_4q_5)\geq 0$	$c_1 =^L_\phi c_4$
1	2	$q_5(1-p_1p_4)$ $-q_4(1-p_2p_5)\geq 0$	$p_3(p_1-p_2)(1-q_4q_5)$ $+q_3(p_1p_4-p_2p_5)\geq 0$	$c_1 >^L_\phi c_2$
2	5	$p_3(q_1q_2-q_4q_5)$ $+q_3(q_2-q_5)(1-p_1p_4)\geq 0$	$p_4(1-q_1q_2)$ $-p_1(1-q_4q_5)\geq 0$	$c_2 =^L_\phi c_5$
2	3	$q_2(1-q_4q_5)$ $-q_3p_4q_5\geq 0$	$p_2p_5(1-p_1p_4)$ $-p_1p_3q_4p_5\geq 0$	$c_2 >^L_\phi c_3$

Table 5.12.1: *Calculation of Link importance ranking for bridge structure system*

Thus Link importance offers the same ranking as Birnbaum's reliability importance.

Finally, using Definition 3.13.5, we tabulate the required quantities we need to calculate path set cut set importance, which gives the same ranking as Butler's cut importance.

	Component c_i						Component c_i				
	1	2	3	4	5		1	2	3	4	5
${}^{\phi}NSMPS_i(1)$	2	2	3	2	2	${}^{\phi}NSMPS_i(0)$	2	2	2	2	2
$\left\vert {}^{\phi}SMPS_i(1)\right\vert$	1	1	2	1	1	$\left\vert {}^{\phi}SMPS_i(0)\right\vert$	1	1	2	1	1
${}^{\phi}NSMCS_i(1)$	2	2	2	2	2	${}^{\phi}NSMCS_i(0)$	2	2	3	2	2
$\left\vert {}^{\phi}SMCS_i(1)\right\vert$	1	1	2	1	1	$\left\vert {}^{\phi}SMCS_i(0)\right\vert$	1	1	2	1	1

Table 5.12.2: *Required values for the calculation of path set cut set importance for bridge structure system*

5.13 Barlow – Proschan Importance

Applying (4.1.3) we have

$$\begin{aligned} I_{\phi}^{B-P}\left(1,\overline{\mathbf{F}}(t)\right) = \lambda_1\Big[&\left(\lambda_1+\lambda_4\right)^{-1}+\left(\lambda_1+\lambda_3+\lambda_5\right)^{-1}-\left(\lambda_1+\lambda_3+\lambda_4+\lambda_5\right)^{-1} \\ &-\left(\lambda_1+\lambda_2+\lambda_3+\lambda_4\right)^{-1}-\left(\lambda_1+\lambda_2+\lambda_3+\lambda_5\right)^{-1} \\ &-\left(\lambda_1+\lambda_2+\lambda_4+\lambda_5\right)^{-1}+2\left(\lambda_1+\lambda_2+\lambda_3+\lambda_4+\lambda_5\right)^{-1}\Big] \end{aligned}$$

$$\begin{aligned} I_{\phi}^{B-P}\left(2,\overline{\mathbf{F}}(t)\right) = \lambda_2\Big[&\left(\lambda_2+\lambda_5\right)^{-1}+\left(\lambda_2+\lambda_3+\lambda_4\right)^{-1}-\left(\lambda_2+\lambda_3+\lambda_4+\lambda_5\right)^{-1} \\ &-\left(\lambda_1+\lambda_2+\lambda_3+\lambda_5\right)^{-1}-\left(\lambda_1+\lambda_2+\lambda_3+\lambda_4\right)^{-1} \\ &-\left(\lambda_1+\lambda_2+\lambda_4+\lambda_5\right)^{-1}+2\left(\lambda_1+\lambda_2+\lambda_3+\lambda_4+\lambda_5\right)^{-1}\Big] \end{aligned}$$

$$\begin{aligned} I_{\phi}^{B-P}\left(3,\overline{\mathbf{F}}(t)\right) = \lambda_3\Big[&\left(\lambda_1+\lambda_3+\lambda_5\right)^{-1}+\left(\lambda_2+\lambda_3+\lambda_4\right)^{-1}-\left(\lambda_1+\lambda_3+\lambda_4+\lambda_5\right)^{-1} \\ &-\left(\lambda_2+\lambda_3+\lambda_4+\lambda_5\right)^{-1}-\left(\lambda_1+\lambda_2+\lambda_3+\lambda_4\right)^{-1} \\ &-\left(\lambda_1+\lambda_2+\lambda_3+\lambda_5\right)^{-1}+2\left(\lambda_1+\lambda_2+\lambda_3+\lambda_4+\lambda_5\right)^{-1}\Big] \end{aligned}$$

Substituting in the values for λ_i where $i = 1,2,3,4,5$ and by noting the appropriate symmetries between the roles c_1, c_2, c_4 and c_5 play within the system, we have that $I_{\phi}^{B-P}\left(1,\overline{\mathbf{F}}(t)\right) = I_{\phi}^{B-P}\left(4,\overline{\mathbf{F}}(t)\right) = 0.441497347$, $I_{\phi}^{B-P}\left(3,\overline{\mathbf{F}}(t)\right) = 0.023128753$ and $I_{\phi}^{B-P}\left(2,\overline{\mathbf{F}}(t)\right) = I_{\phi}^{B-P}\left(5,\overline{\mathbf{F}}(t)\right) = 0.046938277$. Thus, Barlow – Proschan reliability importance gives the same ranking as Birnbaum's reliability importance.

From (4.1.7) we obtain that $I_{\phi}^{B-P}(1) = I_{\phi}^{B-P}(2) = I_{\phi}^{B-P}(4) = I_{\phi}^{B-P}(5) = \frac{7}{30}$ and $I_{\phi}^{B-P}(3) = \frac{2}{30}$ yielding that Barlow – Proschan structural importance gives the same ranking as Birnbaum's structural importance.

5.14 Sequential Contributory Importance

From (4.3.2) we calculate the sequential contributory importance for each component in our system. Intermediate steps have been omitted with the final results being tabulated:

Minimal cut set ${}^{\phi}CS_j^m$	Component c_k	Component c_i				
		1	2	3	4	5
$\{1,2\}$	1	-	$\frac{95745}{229152}$	-	-	-
	2	$\frac{8106}{229152}$	-	-	-	-
$\{4,5\}$	4	-	-	-	-	$\frac{95745}{229152}$
	5	-	-	-	$\frac{8106}{229152}$	-
$\{1,3,5\}$	1	-	-	$\frac{65159}{229152}$	-	$\frac{92225}{229152}$
	3	$\frac{2650}{229152}$	-	-	-	$\frac{2650}{229152}$
	5	$\frac{3146}{229152}$	-	$\frac{5642}{229152}$	-	-
$\{2,3,4\}$	2	-	-	$\frac{5642}{229152}$	$\frac{3146}{229152}$	-
	3	-	$\frac{2650}{229152}$	-	$\frac{2650}{229152}$	-
	4	-	$\frac{92225}{229152}$	$\frac{92225}{229152}$	-	-
Sequential contributory importance contribution for c_i		$\frac{13902}{229152}$	$\frac{190620}{229152}$	$\frac{168668}{229152}$	$\frac{13902}{229152}$	$\frac{190620}{229152}$

Table 5.14.1: *Sequential contributory importance contribution for component c_i under the bridge structure system*

Note that in Table 5.14.1 we define the sequential contributory importance contribution for component c_i as the term:

$$\sum_{j=1}^{{}^{\phi}v(i)} \sum_{k \in CS_j^m(i) \setminus \{i\}} \int_0^t \left\{ h_\phi\left(0_i, 1_k, \overline{\mathbf{F}}(t)\right) - h_\phi\left(0_i, 0_k, \overline{\mathbf{F}}(t)\right) \right\} F_i(u)\, dF_k(u)$$

From Table 5.14.1, we have that components c_2 and c_5 are equally most important, followed by component c_3 with components c_1 and c_4 being least important.

This ranking is contrary to all our previous measures, but is not unexpected since sequential contributory importance takes into account only the failures of components and the system. As components c_2, c_3 and c_5 have a higher unavailability than components c_1 and c_4, they contribute the most to system failure and hence would be more important.

5.15 Natvig Importance

From (4.5.4) we have

$$\begin{aligned} E\left[{}^{\phi}Z_1\right] = \lambda_1 \Big[& \left(\lambda_1+\lambda_4\right)^{-2} + \left(\lambda_1+\lambda_3+\lambda_5\right)^{-2} - \left(\lambda_1+\lambda_3+\lambda_4+\lambda_5\right)^{-2} \\ & - \left(\lambda_1+\lambda_2+\lambda_3+\lambda_4\right)^{-2} - \left(\lambda_1+\lambda_2+\lambda_3+\lambda_5\right)^{-2} \\ & - \left(\lambda_1+\lambda_2+\lambda_4+\lambda_5\right)^{-2} + 2\left(\lambda_1+\lambda_2+\lambda_3+\lambda_4+\lambda_5\right)^{-2} \Big] \end{aligned}$$

$$\begin{aligned} E\left[{}^{\phi}Z_2\right] = \lambda_2 \Big[& \left(\lambda_2+\lambda_5\right)^{-2} + \left(\lambda_2+\lambda_3+\lambda_4\right)^{-2} - \left(\lambda_2+\lambda_3+\lambda_4+\lambda_5\right)^{-2} \\ & - \left(\lambda_1+\lambda_2+\lambda_3+\lambda_5\right)^{-2} - \left(\lambda_1+\lambda_2+\lambda_3+\lambda_4\right)^{-2} \\ & - \left(\lambda_1+\lambda_2+\lambda_4+\lambda_5\right)^{-2} + 2\left(\lambda_1+\lambda_2+\lambda_3+\lambda_4+\lambda_5\right)^{-2} \Big] \end{aligned}$$

$$\begin{aligned} E\left[{}^{\phi}Z_3\right] = \lambda_3 \Big[& \left(\lambda_1+\lambda_3+\lambda_5\right)^{-2} + \left(\lambda_2+\lambda_3+\lambda_4\right)^{-2} - \left(\lambda_1+\lambda_3+\lambda_4+\lambda_5\right)^{-2} \\ & - \left(\lambda_2+\lambda_3+\lambda_4+\lambda_5\right)^{-2} - \left(\lambda_1+\lambda_2+\lambda_3+\lambda_4\right)^{-2} \\ & - \left(\lambda_1+\lambda_2+\lambda_3+\lambda_5\right)^{-2} + 2\left(\lambda_1+\lambda_2+\lambda_3+\lambda_4+\lambda_5\right)^{-2} \Big] \end{aligned}$$

Substituting in the values for λ_i where $i = 1,2,3,4,5$ and by noting the appropriate symmetries between the roles c_1, c_2, c_4 and c_5 play within the system, we have that, $E\left[{}^{\phi}Z_1\right] = E\left[{}^{\phi}Z_4\right] = 0.024698177$, $E\left[{}^{\phi}Z_2\right] = E\left[{}^{\phi}Z_5\right] = 0.000507302$ and $E\left[{}^{\phi}Z_3\right] = 0.000274876$.

By applying Theorem 4.5.20, we have that $\dfrac{\partial E[T]}{\partial \lambda_3^{-1}} = 0.027487553$,

$\dfrac{\partial E[T]}{\partial \lambda_1^{-1}} = \dfrac{\partial E[T]}{\partial \lambda_4^{-1}} = 0.246981769$ and $\dfrac{\partial E[T]}{\partial \lambda_2^{-1}} = \dfrac{\partial E[T]}{\partial \lambda_5^{-1}} = 0.050730184$.

From (4.5.21) we obtain that

$$\begin{aligned}E\left[{}^{\phi}V_1\right] = {} & (\lambda_4)^{-1} + (\lambda_3+\lambda_5)^{-1} - (\lambda_3+\lambda_4+\lambda_5)^{-1} - (\lambda_2+\lambda_3+\lambda_4)^{-1} - (\lambda_2+\lambda_3+\lambda_5)^{-1} \\ & - (\lambda_2+\lambda_4+\lambda_5)^{-1} + 2(\lambda_2+\lambda_3+\lambda_4+\lambda_5)^{-1} - (\lambda_1+\lambda_4)^{-1} - (\lambda_1+\lambda_3+\lambda_5)^{-1} \\ & + (\lambda_1+\lambda_4+\lambda_5)^{-1} + (\lambda_1+\lambda_2+\lambda_3+\lambda_4)^{-1} + (\lambda_1+\lambda_2+\lambda_3+\lambda_5)^{-1} \\ & + (\lambda_1+\lambda_2+\lambda_4+\lambda_5)^{-1} - 2(\lambda_1+\lambda_2+\lambda_3+\lambda_4+\lambda_5)^{-1}\end{aligned}$$

$$\begin{aligned}E\left[{}^{\phi}V_2\right] = {} & (\lambda_5)^{-1} + (\lambda_3+\lambda_5)^{-1} - (\lambda_3+\lambda_4+\lambda_5)^{-1} - (\lambda_1+\lambda_3+\lambda_5)^{-1} - (\lambda_1+\lambda_3+\lambda_4)^{-1} \\ & - (\lambda_1+\lambda_4+\lambda_5)^{-1} + 2(\lambda_1+\lambda_3+\lambda_4+\lambda_5)^{-1} - (\lambda_2+\lambda_5)^{-1} - (\lambda_2+\lambda_3+\lambda_4)^{-1} \\ & + (\lambda_2+\lambda_4+\lambda_5)^{-1} + (\lambda_1+\lambda_2+\lambda_3+\lambda_5)^{-1} + (\lambda_1+\lambda_2+\lambda_3+\lambda_4)^{-1} \\ & + (\lambda_1+\lambda_2+\lambda_4+\lambda_5)^{-1} - 2(\lambda_1+\lambda_2+\lambda_3+\lambda_4+\lambda_5)^{-1}\end{aligned}$$

$$\begin{aligned}E\left[{}^{\phi}V_3\right] = {} & (\lambda_1+\lambda_5)^{-1} + (\lambda_2+\lambda_4)^{-1} - (\lambda_1+\lambda_4+\lambda_5)^{-1} - (\lambda_2+\lambda_4+\lambda_5)^{-1} - (\lambda_1+\lambda_2+\lambda_4)^{-1} \\ & - (\lambda_1+\lambda_2+\lambda_5)^{-1} + 2(\lambda_1+\lambda_2+\lambda_4+\lambda_5)^{-1} - (\lambda_1+\lambda_3+\lambda_5)^{-1} - (\lambda_2+\lambda_3+\lambda_4)^{-1} \\ & + (\lambda_1+\lambda_3+\lambda_4+\lambda_5)^{-1} + (\lambda_2+\lambda_3+\lambda_4+\lambda_5)^{-1} + (\lambda_1+\lambda_2+\lambda_3+\lambda_4)^{-1} \\ & + (\lambda_1+\lambda_2+\lambda_3+\lambda_5)^{-1} - 2(\lambda_1+\lambda_2+\lambda_3+\lambda_4+\lambda_5)^{-1}\end{aligned}$$

Thus $E\left[{}^{\phi}V_1\right] = E\left[{}^{\phi}V_4\right] = 0.053470709$, $E\left[{}^{\phi}V_2\right] = E\left[{}^{\phi}V_5\right] = 0.003058058$ and $E\left[{}^{\phi}V_3\right] = 0.000850964$.

Using (4.5.2), (4.5.17), Theorem 4.5.23 and (4.5.20) we have:

Component c_i	Natvig Importance			
	$I_{\phi}^{N_1}(i)$	$I_{\phi}^{N_2}(i)$	$I_{\phi}^{N_3}(i)$	$I_{\phi}^{N_4}(i)$
1	0.487279688	0.396495787	0.487279688	0.469418091
2	0.01000875	0.081440441	0.01000875	0.026846615
3	0.005423124	0.044127545	0.005423124	0.007470589
4	0.487279688	0.396495787	0.487279688	0.469418091
5	0.01000875	0.081440441	0.01000875	0.026846615

Table 5.15.1: *Values of Natvig N_1, N_2, N_3 and N_4 importance for the bridge structure system.*

Therefore, all Natvig importance measures offer the same importance ranking result as Birnbaum's reliability importance.

5.16 Bergman's Infinitesimal Scale Change Importance

From (4.6.3) we have

$$\begin{aligned}{}^{\phi}\Delta_1 = \lambda_1\Big[&(\lambda_1+\lambda_4)^{-3}+(\lambda_1+\lambda_3+\lambda_5)^{-3}-(\lambda_1+\lambda_3+\lambda_4+\lambda_5)^{-3}\\&-(\lambda_1+\lambda_2+\lambda_3+\lambda_4)^{-3}-(\lambda_1+\lambda_2+\lambda_3+\lambda_5)^{-3}\\&-(\lambda_1+\lambda_2+\lambda_4+\lambda_5)^{-3}+2(\lambda_1+\lambda_2+\lambda_3+\lambda_4+\lambda_5)^{-3}\Big]\end{aligned}$$

$$\begin{aligned}{}^{\phi}\Delta_2 = \lambda_2\Big[&(\lambda_2+\lambda_5)^{-3}+(\lambda_2+\lambda_3+\lambda_4)^{-3}-(\lambda_2+\lambda_3+\lambda_4+\lambda_5)^{-3}\\&-(\lambda_1+\lambda_2+\lambda_3+\lambda_5)^{-3}-(\lambda_1+\lambda_2+\lambda_3+\lambda_4)^{-3}\\&-(\lambda_1+\lambda_2+\lambda_4+\lambda_5)^{-3}+2(\lambda_1+\lambda_2+\lambda_3+\lambda_4+\lambda_5)^{-3}\Big]\end{aligned}$$

$$\begin{aligned}{}^{\phi}\Delta_3 = \lambda_3\Big[&(\lambda_1+\lambda_3+\lambda_5)^{-3}+(\lambda_2+\lambda_3+\lambda_4)^{-3}-(\lambda_1+\lambda_3+\lambda_4+\lambda_5)^{-3}\\&-(\lambda_2+\lambda_3+\lambda_4+\lambda_5)^{-3}-(\lambda_1+\lambda_2+\lambda_3+\lambda_4)^{-3}\\&-(\lambda_1+\lambda_2+\lambda_3+\lambda_5)^{-3}+2(\lambda_1+\lambda_2+\lambda_3+\lambda_4+\lambda_5)^{-3}\Big]\end{aligned}$$

Hence, taking into account the appropriate symmetries between the roles c_1, c_2, c_4 and c_5 play within the system, we have that, ${}^{\phi}\Delta_1 = {}^{\phi}\Delta_4 = 0.001248537$, ${}^{\phi}\Delta_2 = {}^{\phi}\Delta_2 = 0.000003905$ and ${}^{\phi}\Delta_3 = 0.000002203$.

Therefore, by (4.6.4) we have $I_{\phi}^{BISC}\left(1, \overline{\mathbf{F}}(t)\right) = I_{\phi}^{BISC}\left(4, \overline{\mathbf{F}}(t)\right) = 0.498002961$, $I_{\phi}^{BISC}\left(2, \overline{\mathbf{F}}(t)\right) = I_{\phi}^{BISC}\left(5, \overline{\mathbf{F}}(t)\right) = 0.001557655$ and $I_{\phi}^{BISC}\left(3, \overline{\mathbf{F}}(t)\right) = 0.00087868$ which yield the same component importance ranking as Birnbaum's reliability importance

6 SUMMARY AND CONCLUSION

As seen, this dissertation discussed several solutions to the problem of defining one component to be of greater importance than another component within monotone systems with independent components.

As such the primary criterion required to arrive at ranking all components in terms of their importance, is in defining exactly what property of a component's behaviour is fundamental to the system behaviour e.g. whether the failure of a component will lead to the failure of the system (as was the case in defining Barlow – Proschan importance). The definition of this property is at best a subjective exercise and is governed mainly by the specific application of the individual system under consideration and the objectives underlying the reason why component importance should be defined.

Therefore, the main advantage of each importance measure lies within its criterion of definition.

However, this does not invariably mean that only one single measure of importance will ultimately give the correct importance ranking of the components. In fact, we have seen in our bridge structure system that all importance measures (with the exception of the sequential contributory importance measure) concurred with the order of importance between the components.

Thus, it could be that the importance of a component, in some way, transcends defining an importance measure solely on one individual criterion. We know that all measures are defined by taking the structure function of the system into account. Thus, all importance measures are heavily dependent on the definition of the structure function. Therefore, it is the structure function that is mainly responsible for the importance ranking of components and not only the criterion of definition – a fact that many believe is justified since it leads to an objective method of component importance ranking. This would lead to a combination of

importance measures being considered before ultimately deciding upon an importance ranking for the system components.

A secondary criterion of interest – but not always of lesser value – would be the computational ease with which component importance can be determined. Obviously, one expects that computationally easier importance measures will be preferred over other measures. This fact, though, truly depends on the amount of available and reliable information about the system and its components.

Without doubt, most structural importance measures are easier to calculate than their reliability counterparts, especially in the case of time dependent importance measures. However, this ease of computation can lead to a loss of not being able to discern the importance between similar components e.g. such as in the case of components c_1 and c_2 within our bridge structure system for most structural importance measures.

Therefore, the selection of the importance measure is a trade off between the loss of accuracy caused by ignoring valuable information – by choice or other constraints – against the computational difficulty of working with a chosen importance measure. Both of these issues are in fact regulated by the criterion of definition of the measure. So, in effect, the main advantage of an importance measure can actually lead to several weaknesses within the application of the measure.

This has been attested to by the use of criticality of nodes importance ranking for our bridge structure system. By Theorem 3.11.6, we know that the ranking imposed by the criticality of nodes importance will impose that same ranking as under Butler's cut importance. However, the criticality of nodes importance could not be determined. Hence, at times a seemingly superior importance measure would have to be overlooked due to computational considerations.

The use of dual systems – systems that may only be of an artificial nature in terms of the required application – can be quite useful in aiding computational difficulties. In particular, this has been demonstrated by the calculation of Meng's criticality importance for the bridge structure example.

Additionally, dual systems can also be used to quantify relationships between different measures, such as between Meng's criticality and Vesely – Fussell importance, or assist in defining new measures, such as those alluded by the dual measure of Natvig's N_3 importance.

In terms of determining the importance of modules within systems, we note that these importance measures are defined analogously to appropriate component importance measure – thus the preceding discussion above is also pertinent to modules.

Finally, many of the above measures have been extended once the assumptions regarding their construction are relaxed.

Jackson [33] extended (3.1.5), (3.2.1), (3.3.2), (4.1.3), and (4.4.1) for non-coherent systems whilst Zhang and Mei [34] suggested an alternative method for these extensions. Beeson and Andrews [35] and [36] continued this work. Bossche [37] found a generalisation of (3.1.5) for multi-state, non-coherent systems. Armstrong [25] provided the extension of (3.1.5), (3.1.10), (3.8.1) and Link Importance of Systems with dual failure mode components.

New importance measures, specifically used for certain systems or criteria, have also been developed.

Papastavridis [38] used Birnbaum Importance on a *consecutive-k-out-of-n:F* system with identically and independently distributed components to find the most important component. Papastavridis and Sfakianakis [39] repeated this for a *consecutive-k-out-of-r-from-n:F* system. Pan and Tai [40] defined Variance

Importance of components. Gandini [41] showed that reliability considerations could be expressed in terms of Generalised Perturbation Theory and a Markov model representation. Shen and Xie [42] defined a measure to select optimally a component for parallel redundancy in terms of system reliability. Lee *et al* [43] evaluated the importance, using Birnbaum's measure, of gates in a fault tree and Hong *et al* [44] continued to define the joint reliability importance of two gates. Hong *et al* [45] also constructed the joint reliability measure for *k-out-of-n* systems. Chang and Hwang [46] developed an importance measure for *consecutive-k* systems where the components have small reliabilities.

7 REFERENCES

1 AVEN, T., JENSEN, U., "Stochastic Models in Reliability", Applications of Mathematics: Stochastic Modelling and Applied Probability, 41, Springer-Verlag New York, 1999

2 BARLOW, R. E., PROSCHAN, F., "Statistical Theory of Reliability and Life Testing: Probability Models", Holt, Rinehart and Winston Inc, 1975

3 BEICHELT, F., "Zuverlässigkeits und Instadhaltungstheorie", B. G. Teubner Stuttgart, 1993

4 BEICHELT, F., "Zuverlässigkeits Strukturierter Systeme", VEB Verlag, Berlin , 1988

5 KOVALENKO, I. N., KUZNETSOV, N. Y., PEGG, P. A., "Mathematical Theory of Reliability of Time Dependant systems with Practical Applications", John Wiley & Sons Ltd, England, 1997

6 MODARRES, M., KAMINSKIY, M., KRIVTSOV, V., "Reliability Engineering and Risk Analysis", Marcel Dekker Inc, 1999

7 FELLER, W., "An Introduction to Probability Theory and its Applications" Volume II, Third Edition, John Wiley & Sons Inc., 1971

8 PRABHU, N. U., "Stochastic Processes: Basic Theory and its Application", The Macmillan Company, New York, 1965.

9 SMITH, W. L., "Renewal Theory and its Ramifications", Journal of the Royal Statistical Society, Series B, Volume 20, 1958, pages 243-302

10 BIRNBAUM, Z. W., "On the Importance of Different Components in a Multicomponent System", Multivariate Analysis II (P. R. Krishnaiah edition), Academic Press, New York, 1969, pages 581-592

11 VESELY, W. E., "A Time Dependant Methodology for Fault Tree Evaluation", Nuclear Engineering Design, Volume 13, 1970, pages 337-360

12 FUSSELL, J. B., "How to Hand-Calculate System Reliability and Safety Characteristics", IEEE Transactions on Reliability, Volume R-24, 1975, pages 169-174

13 LAMBERT, H. E., "Measures of Importance of Events and Cut Sets in Fault Trees", Reliability and Fault Tree Analysis, SIAM Philadelphia, 1975, pages 77-100

14 RYABININ, I. A., CHERKESOV, G. N., "Logical Probability Methods for Reliability Investigations of Structurally Complex Systems", Radio i Svyaz, Moscow, 1981

15 BUTLER, D. A., "A Complete Ranking for Components of Binary Coherent Systems, with Extensions to Multi State Systems", Naval Research Logistics Quarterly, Volume 26, 1979, pages 565-578

16 ARNDT, K., KIRSTEIN, B-M., "An Importance Ranking for Components of Highly Reliable Systems", Journal of Information Processing and Cybernetics – EIK, Volume 19, 1983, pages 535-545

17 HONG, J. S., LIE, C. H., "Joint reliability Importance in an Undirected Network", IEEE Transactions on Reliability, Volume 42, No 1, 1993, pages 17-23

18 VESELY, W. E., BELHADJ, M., REZOS, J. T., "PRA Importance Measures for Maintenance Prioritisation Applications", Reliability engineering and System Safety, Volume 3, 1994, pages 307-318

19 BOLAND, P. J., PROSCHAN, F., TONG, Y. L., "Optimal Arrangement of Components via Pairwise Arrangement", Naval Research Logistics, Volume 36, 1989, pages 807-815

20 KOUTRAS, M. V., PAPADOPOULOS, G. K., PAPASTAVRIDIS, S. G., "Note: Pairwise Rearrangements in Reliability Structures", Naval Research Logistics, Volume 41, 1994, pages 683-687

21 MENG, F. C., "Comparing Criticality of Nodes via Minimal Cut (Path) Sets for Coherent Systems", Probability in the Engineering and Informational Sciences, Volume 8, 1994, pages 79-87

22 MENG, F. C., "Some Further Results on Ranking the Importance of System Components", Reliability Engineering and System Safety, Volume 47, 1995, pages 97-101

23 MENG, F. C., "Comparing the Importance of System Components by some Structural Characteristics", IEEE Transactions on Reliability, Volume 44, No 1, 1996, pages 59-65

24 PAGE, L. B., PERRY, J. E., "Reliability Polynomials and Link Importance in Networks", IEEE Transactions on Reliability, Volume 43, No 1, 1994, pages 51-58

25 ARMSTRONG, M. J., "Reliability Importance and Dual Failure Mode Components", IEEE Transactions on Reliability, Volume 46, No 2, 1997, pages 212-221

26 BARLOW, R. E., PROSCHAN, F., "Importance of System Components and Fault Tree Events", Stochastic Processes and their Applications, Volume 3, 1975, pages 153-173

27 SHOHAT, J. A., TAMARKIN, J. D., "The Problem of Moments", American Mathematical Society Mathematical Surveys, Volume II, 1943, page 19

28 NATVIG, B., "A Suggestion of a New Measure of Importance of System Components", Stochastic Processes and their Applications, Volume 9, 1979, pages 319-330

29 NATVIG, B., "New Light on Measures of Importance of System Components", Scandinavian Journal of Statistics, Volume 12, 1985, pages 43-54

30 NATVIG, B., "On the Reduction in Remaining System Lifetime due to the Failure of a Specific Component", Journal of Applied Probability, Volume 19, pages 642-652

31 BERGMAN, B., "On Some New Reliability Importance Measures", Proceedings of the IFAC SAFECOMP '85 (W. J. Quirk edition) Como, Italy, 1985, pages 61-64

32 XIE, M., "On Some Importance Measures of System Components", Stochastic Processes and their Applications, Volume 25, 1987, pages 273-280

33 JACKSON, P S, "On the Importance of Elements and Prime Implicants of Non Coherent Systems", IEEE Transactions on Reliability, Volume R-32, No 1, 1983, pages 21-25

34 ZHANG, Q, MEI, Q, "Element Importance and System Failure Frequency of a Two State System", IEEE Transactions on Reliability, Volume R-34, No 4, 1985, pages 308-313

35 BEESON, S, ANDREWS, J D, "Birnbaum's Measure of Component Importance for Non-Coherent Systems", IEEE Transactions on Reliability, Volume 52, No 2, 2003, pages 213-219

36 BEESON, S, ANDREWS, J D, "Importance Measures for Non-Coherent System Analysis", IEEE Transactions on Reliability, Volume 52, No 3, 2003, pages 301-310

37 BOSSCHE, A, "Calculation of Critical Importance for Multi-State Components", IEEE Transactions on Reliability, Volume R-36, No 2, 1987, pages 247-249

38 PAPASTAVRIDIS, S G, "The Most Importance Component in a *Consecutive-k-out-of-n:F* System", IEEE Transactions on Reliability, Volume R-36, No 2, 1987, pages 266-268

39 PAPASTAVRIDIS, S G, SFAKIANAKIS M E, "Optimal Arrangement & Importance of the Components in a *Consecutive-k-out-of-r-from-n:F* System", IEEE Transactions on Reliability, Volume 40, No 3, 1991, pages 277-279

40 PAN, Z-J, TAI, Y-C, "Variance Importance of System Components by Monte Carlo", IEEE Transactions on Reliability, Volume 37, No 4, 1988, pages 421-423

41 GANDINI, A, "Importance & Sensitivity Analysis in Assessing System Reliability", IEEE Transactions on Reliability, Volume 39, No 1, 1990, pages 61-70

42 SHEN, K, XIE, M, "On the increase of System Reliability by Parallel Redundancy", IEEE Transactions on Reliability, Volume 39, No 5, 1990, pages 607-611

43 LEE, H S, CHANG, H L, HONG, J S, "A Computation Method for Evaluating Importance Measures of Gates in a Fault Tree", IEEE Transactions on Reliability, Volume 46, No 3, 1997, pages 360-365

44 HONG, J S, KOO, H Y, LIE, C H, "Computation of Joint Reliability Importance of Two Gate Events in a Fault Tree", Reliability Engineering and System Safety, Volume 68, 2000, pages 1-5

45 HONG, J S, KOO, H Y, LIE, C H, "Joint Reliability Importance of *k-out-of-n* Systems", European Journal of Operational Research, Volume 142 , 2002, pages 539-547

46 CHANG, H-W, HWANG, F K, "Rare Event Component Importance for the *Consecutive-k* System", Naval Research Logistics, Volume 49, 2002, pages 159-166