

https://dspace.org/

Development of a mobility aid for paraplegics in rural areas

Bartels, Heinrich

2014-12-04
http://hdl.handle.net/10539/15903

Downloaded from a DSpace repository. https://dspace.org/

University of the Witwatersrand, Johannesburg

School of Mechanical Engineering

DEVELOPMENT OF A MOBILITY AID FOR PARAPLEGICS IN RURAL AREAS

MSc(Eng) Dissertation

By: Heinrich Bartels

17 December 1989

25×

Synopsis

At present there exists no adequate mobility aid designed for rural areas in Southern Africa and paraplegics have difficulty in negotiating rough ground with conventional wheelchairs. Specifications for a suitable mobility aid were developed after interviewing paraplegics in Lesotho and Bophuthatswana, and after conducting tests by personally riding a conventional wheelchair in those areas. After considering various options, a four-wheeled chain driven vehicle was chosen because it satisfies most of the specifications. The proposed design is a compromise which emphasises improved mobility outdoors. It is able to enter houses, climb gradients of 1:5 and will cost about R700 to manufacture. A prototype was built and initial tests indicated the need for some modifications but confirmed the main advantages. However, further trials will be needed to test the robustness of the design before considering subsequent development.

Acknowledgements

Without the help of the following people and organisations this project would not have been possible.

Firstly I express my gratitude towards Prof Chris Dimitriou, my supervisor, who supported me during the entire project.

TEBA (The Employment Bureau of Africa) who sponsored the project also provided transport, interpreters and accommodation for the surveys. Their knowledge of locations of paraplegics and of local customs made the surveys possible. I thank Dr Martiny for the sponsorship and always being prepared to help with any requests I had. In preparation for the surveys I worked in c e conjunction with Dr Boulle. His enthusiasm and effort are appreciated. I extend special thanks to James Coetzer, the manager of TEBA in Lesotho, for the interest and effort he put into making the surveys successful.

Huib Cornielje of Gelukspan Hospital organised the survey in Bophuthatswana. I appreciate having interviewed most paraplegics with him personally present. He also made invaluable suggestions for improving the questionnaire.

Neville Cohen and Ian Cristol who, among other items manufacture wheelchairs gave invaluable advice on the design and manufacture of the chosen design.

I thank my father Kurt Bartels for making his workshop available for the manufacture of the mobility aid.

Thulani Tshabalala of SHAP assisted with setting up of the questionnaire. This included interviewing a few paraplegics in Soweto.

I also thank Peter Denby of Raleigh, Brian Hill of the Design Institute (SABS) Werner Bartels, Jorge Morais, Henk Terblanche, Michael Seitz, Annemarie Benard, Edmund Benard, Sandy Duff, Joanne Kisby-Green, Mandy Latimore, Makita Manula, Kathy Jagoe and the disabled people who allowed me to interview them.

Declaration

I declare that this thesis is my own, unaided work. The thesis is being submitted for the Degree of Master of Science in Engineering in the University of the Witwatersrand, Johannesburg. It has not been submitted before for any degree or examination in any other university.

Heinrich Bartels

21st day of December 1989

I dedicate this work to my parents Kurt and Marie Bartels.

Contents

Synopsis i
Acknowledgements ii
Declaration iii
Dedication iv
Contents v
List of Figures ix
List of Tables xi

1.0 Introduction **1**
1.1 Outline of Thesis 2

2.0 Objective **3**

3.0 Solution Specification **4**

4.0 Surveys in Rural Areas **6**
4.1 Objectives 6
4.2 The Questionnaire and Conduct of Interviews 6
4.3 Information from questionnaires 7
4.4 Wheelchair Tests 11
4.5 Evaluation of the wheelchair tested in Lesotho 13
4.6 Desirable characteristics of a rural area mobility aid 14
4.7 Other Mobility Aids 15
4.8 Workshops 16
4.9 Conclusions 17

5.0 Selection Criteria **19**
5.1 Requirements 19
5.2 Constraints 19
5.3 Criteria 20

6.0 Concept Design **22**

6.1 Modified conventional wheelchair 22
6.2 Independent Chain Driven Vehicles 26
6.2.1 Stability of rear and front drive mobility aids 29
6.3 Walker designs 31
6.4 Tracked design 31
6.5 Wheeled-tracked combination 33
6.6 Air cushion 33
6.7 Comparison of Concept Designs with respect to Requirements and Constraints 34
6.8 Selection of Mobility Aid 34
6.9 Concept Design Conclusions 37

7.0 Detail Design 38
7.1 Overall Design 38
7.2 Seat Design 41
7.3 Material Choices 43
7.3.1 The Frame 43
7.3.2 Backrest Material 43
7.4 Selection of standard parts 44
7.5 Wheel Design 44
7.5.1 Wheel selection 44
7.5.2 Tyre Tubing 46
7.5.3 Wheel Support Structure 47
7.6 Drive Design 47
7.6.1 Gear and Drive System 49
7.7 Brake Design 50

8.0 Design Analysis 51
8.1 Stability 51
8.2 Force and Stress Analysis 53
8.2.1 The Finite Element Mesh 55
8.2.2 Boundary and Loading Conditions 55
8.2.3 Analysis 56
8.3 Fatigue failure 57

9.0 Manufacture of the Mobility Aid **61**

10.0 Testing and Modification of the Prototype **62**
10.1 Terrain Testing 62
10.2 Tests at Hillbrow and Wenela Hospitals 63
10.3 Modifications 65

11.0 The evaluation of the prototype **66**
11.1 General Evaluation 66
11.2 Further Testing and Improvements 67

12.0 Further Work in Rural Mobility **69**

13.0 References **70**

14.0 Bibliography **72**

Appendix A. Literature Survey **76**
A.1 Alternative Rural Wheelchairs 76
A.1.1 Conventional type Chairs 76
A.1.2 Chain or Lever-operated Chairs 78
A.2 Medical Background 80
A.2.1 Spinal Cord Injuries 80
A.2.2 The Spinal Cord 81
A.2.3 The nervous system 83
A.2.4 Nerve Endings (Figure A.7) 84
A.2.5 Motor Endings 85
A.3 Animal-Insect based walking mechanisms 86
A.3.1 Insects 86
A.3.2 Four legged animals 86
A.3.3 Man made legged motion 88
A.4 Ergonomics 92
A.4.1 Anthropometrics 92
A.4.2 Application of Force 92

Appendix B. Building of manikins **94**

Appendix C. Calculations **97**
C.1 Gear ratios 97
C.2 Centres of Gravity 98
C.3 Stability 104
C.3.1 Static Stability 104
C.3.2 Dynamic Stability 104
C.4 Stress Analysis 107
C.5 Fatigue Analysis 109
C.6 Natural Frequency Analysis of the Castors 112
C.6.1 Modified Castor Arrangement 114
C.7 Square - Round Tubing Comparison 114

Appendix D. Documents from the surveys **119**
D.1 The Questionnaire 119
D.2 The Introduction to the Surveys 121

Appendix E. Estimated cost of a manufactured wheelchair **122**

Appendix F. ABAQUS Input files and and an excerpt from an output file. . **123**
F.1 Abaqus Input 123
F.1.1 Complete input for the loading conditions according to the CG . 123
F.1.2 Loading Conditions for a distributed load on the top cross-member 134
F.1.3 Loading Conditions for a concentrated load on the seat corner .. 134
F.2 Excerpt of Output 134

Appendix G. Pascal Source Code for the Stress Analysis **137**

Appendix H. Drawings **142**

List of Figures

3.1 The prototype of the mobility aid
4.1 Frequency of failures of parts of wheelchairs
4.2 Tipping and balancing a wheelchair
4.3 Footrests getting caught in obstacles
6.1 Concepts rejected at an early stage
6.2 Modified conventional wheelchair
6.3 Uncomfortable position using modification
6.4 Double independent rear driven chain drive vehicles
6.5 Double independent front driven chain drive vehicle
6.6 Castor Configuration
6.7 Wheelbase of Mobility Aid
6.8 Configuration of the rear driven mobility aid
6.9 Friction force acting on the castor
6.10 Out of line configuration of the rear driven mobility aid
6.11 Configuration of the front driven mobility aid
6.12 Out of line configuration of the front driven mobility aid
6.13 Walker
6.14 Tracked Design
6.15 A Wheeled Tracked Design
6.16 Rebuilt Front Wheel Driven Mobility Aid
7.1 General dimensions of the mobility aid
7.2 97.5*th manikin seated in the prototype*
7.3 Adjustable Chair
7.4 Two seat contours judged to be the most comfortable (McCormick(12))
7.5 Chair with an offset backrest
7.6 The walking wheel
7.7 The wide wheel
7.8 Rubber or Hose Insert (Hotchkiss (10))
7.9 Lever Drive Mechanism
8.1 Sideways Stability
8.2a) Node Numbering of the Mobility Aid

8.2b) Element Numbering of the Mobility Aid
8.3 Boundary Conditions
8.4 High displacement of the rear wheels with respect to one another thus inducing high strains (high stresses) on the footrest cross-member(not shown)
8.5 Position of member added for strengthening
8.6 Top View of analysed frame depicting angling outward of the front section.
10.1 Castors caught in a position perpendicular to motion
A.1 The ATI Hotchkiss wheelchair
A.2 The Thailand wooden wheelchair (20)
A.3 The Fafupi tricycle (22)
A.4 The Spinal Cord
A.5 The Nerve Cell
A.6 The Nervous Reflex Arc
A.7 Different types of Nerve Ending (McNaught(14))
A.8 Motor Neuron and End Plate (McNaught(14))
A.9 The Tripod Gait (Raibert(15))
A.10 The Wave Gait (Raibert(15))
A.11 Mechanical Horse by Lewis A Rygg (Raibert(15))
A.12 Six Legged Machine (Raibert(15))
A.13 One Legged 2-D Hopper (Raibert(15))
A.14 One Legged 3-D Hopper (Raibert(15))
B.1 Dimensions used to build manikins (See Table B.1)
C.1 Force F required to move a vehicle up a slope
C.2 Positions of CGs for all Body Parts
C.3 Forces and acceleration of vehicle about to tip backwards while moving up an incline
C.4 Plot of dimensionless forces vs incline angle
C.5 Analysis using the modified Goodman diagram
C.6 Analysing the Natural Frequency of the Castor Fork
C.7 Dimensions of sections for bending
C.8 Dimensions of sections for torsion

List of Tables

4.1 Selected information from the surveys
6.1 Comparison of concepts with respect to the requirements and constraints
6.2 Comparison of concepts with respect to the criteria
B.1 Dimensions used for the manikins
C.1 The CG of the mobility aid
C.2 Centres of gravity for statistical people
C.3 The combined CGs of mobility aid and people (all positions are given relative to the point of contact of the rear wheel with the ground)
C.4 Angles of topple for toppling over the rear wheels
C.5 Angles of topple for toppling sideways

1.0 Introduction

What is a paraplegic? A person whose spinal cord (Appendix A.2) has been partially or wholly severed below the neck is classified as a paraplegic. A severance of the spine leads to a loss of sensory or motor functions in the lower sections of the body. As a result paraplegics have to contend, inter alia, with reduced mobility, incontinence, acceptance by society and social awareness of their problems. Mobility will be the main subject of investigation in this thesis, although other aspects will be touched on. Mobility includes access to buildings and public areas as well as the use of public transport.

Wheelchairs help disabled people to become mobile. At first, wheelchairs consisted of chairs with wheels, but today they have purpose oriented frames. Front propelled conventional wheelchairs, which are very manoeuvrable and stable, were originally the more common. Rear driven conventional wheelchairs have become more popular lately because they can be tilted and balanced which greatly enhances their mobility.

In urban areas major difficulties are encountered with gradients steeper than 1:12 and with staircases or even single steps. These have now been partially alleviated by new legislation in South Africa (Part S of the National Building Regulations (18)). Facilities for the disabled have to be included in all public buildings built after April 1986. Gradients of pavements, which are not included in the National Building Regulations, are presently negotiated with the aid of an able-bodied person or with either a motorised wheelchair or a motor vehicle.

In rural areas there are generally no provisions for wheelchair users. Public transport can often only be reached after more than a kilometre of travel over rough ground, which cannot be adapted for wheelchair users and no adequate wheelchair exists to cope with it.

TEBA (The Employment Bureau of Africa) employs men mostly from the rural areas for the the mines. The organisation also looks after people who have been permanently disabled on the mines by providing them with equipment and distributing their pensions. Drs Martiny and Boulle of TEBA decided that these

activities needed to be amplified because of the large number of readmissions to the Rand Mutual Hospital and the need for frequent replacement of wheelchairs. They therefore conducted surveys in Lesotho and Transkei to establish the needs of paraplegics in their home environment. One finding was that most wheelchairs used in these areas were in a poor condition and the need for an alternative wheelchair became evident.

1.1 Outline of Thesis

The thesis begins by describing in Chapter 3 the proposed mobility aid for paraplegics in rural areas. Surveys (Chapter 4), which were needed to establish conditions in rural areas and to indicate what properties the mobility aid should have, were used to draw up a set of requirements, constraints and criteria (Chapter 5). Various designs were then conceptualised (Chapter 6) and the requirements, constraints and criteria were used for selecting a suitable design. The selected concept is developed in Chapter 7 and in Chapter 8 stability, stresses and fatigue are analysed. The manufacture of the prototype and the mobility aid's future manufacture are discussed in Chapter 9. The prototype was then initially tested (Chapter 10) on ground similar to that found in rural areas. Finally the prototype is evaluated in Chapter 11.

2.0 Objective

A mobility aid needs to be developed which will significantly improve the mobility of paraplegics in rural areas and reduce the frequency of structural failures.

3.0 Solution Specification



Figure 3.1 The prototype of the mobility aid

The mobility aid consists of

- two chains which independently drive the two rear wheels
- two 16"(405mm) x 2 1 4"(55mm) rear wheels
- two 12"(304mm) x 1.75"(47mm) castors
- wooden seat
- PVC canvas backrest
- 22.23 x 1.6mm mild steel tubing for the side frames
- 25.4 x 1.6mm mild steel tubing for the cross braces
- 15.88 x 1.2mm mild steel tubing for the rear forks
- standard bicycle bottom bracket bearings for the pedals
- standard bicycle fork bearings for the castors

Main dimensions are:

- *Length: 1400mm*
- Overall Width: 640mm
- Wheelbase: 1040mm
- Seat width: 450mm

The mass of the wheelchair is 21.4 kg

The mobility aid will cost about R700 to manufacture (1988 values).

25×

4.0 Surveys in Rural Areas

Drs Martiny and Boulle of TEBA conducted surveys in Lesotho and the Transkei to establish the living conditions of former patients. Their surveys were geared towards general rehabilitation and not specifically to the patients' mobility. The author needed information mainly on mobility and thus needed to conduct his own surveys. Two initial surveys in Lesotho and Bophuthatswana were used to develop a questionnaire and to gain a first insight into rural conditions. A further survey was subsequently undertaken in Lesotho.

4.1 Objectives

The objectives of these surveys were to:

1. become acquainted with a rural environment which restricts the use of wheelchairs;
2. interview disabled people to find out what aids they required;
3. test a conventional wheelchair there to obtain personal experience of it in a rural setting;
4. observe how a conventional wheelchair withstands rural conditions;
5. establish what facilities are available for the manufacture or repair of wheelchairs.

At the conclusion of the surveys, it was intended to formulate the essential characteristics of a mobility aid for rural areas.

4.2 The Questionnaire and Conduct of Interviews

A complete set of relevant data about each disabled person, including their social and environmental aspects, was required. The questionnaire was drawn up to acquire information useful in the design of a mobility aid using advice from Thulani Tshabalala and a questionnaire compiled by Dr Jerome Boulle of TEBA. Certain of the initial questions were modified, others deleted and some added

according to the findings of the writer's initial surveys in Lesotho and Bophuthatswana.

In Lesotho all the interviews were conducted with English being translated into Sotho and the answers vice-versa. In Bophuthatswana some people were interviewed in either Afrikaans or English and the rest by translating English and Tswana. It was pointed out by Huib Cornielje, a physiotherapist at Gelukspan Hospital in Bophuthatswana, that most of the people interviewed were disturbed by the sequence of the interview and embarrassed by the section on anthropometrics. An introduction to the questionnaire (Appendix E), which would be read out in the mother tongue of the interviewee, was therefore prepared.

4.3 Information from questionnaires

Selected information was extracted from the questionnaires in the initial (L1-L6) and final (L7-L25) Lesotho and Bophuthatswana (B1-B8) surveys and is presented in Table 4.1. Certain information does not appear from the initial Lesotho survey , because it was not asked in the first questionnaire. All the people questioned in Lesotho, except L14, are ex-miners. In Bophuthatswana not all the interviewees had been involved with the mines. Most interviewees were paraplegics. The only four women in the surveys (B1-B3,B5) were interviewed in Bophuthatswana.

In all three surveys the educational level of the interviewees was low. No recognisable difference in education was observed between those in Lesotho and Bophuthatswana. This indicates that all the people would have been in relatively low income brackets before their injury. The size of their incomes after their injuries reinforces this perception and their low educational level makes it especially difficult for them, being disabled, to find work. Educated paraplegics have been known to find work in fields like computers, finance and even in engineering.

The incomes of the paraplegics in Lesotho was much higher than those in Bophuthatswana, because most of the former were paid pensions by the mines.

	Disability	Education (Std)	Distances (km) Shops	Transport	Water	Type of Public transport	TyreType	Repair Frequency (Months)	Wheelchair Skills	Items Repaired	Average No of years per Wheelchair	Surface around home	Max Gradient around Home	Landscape	Total Monthly Income (R)
L1	Paraplegic	0	3	3	-	Bus	-	-	-	-	-	sloped	1:5	mountainous	-
L2	Quadriplegic	9	2	-	-	Hire	-	-	-	-	-	flat/uneven	neg	hilly/mountainous	700
L3	Paraplegic	0	0.3	0.3	-	Hire/Bus	-	-	-	frame,drivewheels	4	flat	1:8	flat/hilly	-
L4	Paraplegic	3	9	9	0.01	Hire	-	-	-	-	-	uneven	1:5	hilly/mountainous	360
L5	Paraplegic	0	0.15	0.5	-	Taxi	-	-	-	-	-	flat	1:5	flat/hilly	260
L6	Paraplegic	0	1	0.4	0.02	Taxi	-	-	-	-	-	flat/uneven	1:7	flat	-
L7	Paraplegic	0	0.6	-	2	Hire	Pneumatic	6	none	castors	-	flat	1:11	hilly	250
L8	Paraplegic	0	5	-	1	Company	No-More-Flats	-	-	none	3	sloped/uneven	1:12	hilly	474
L9	Paraplegic	6	5	-	0.2	Company	No-More-Flats	-	none	bearings	3	sloped/uneven	1:3	hilly/mountainous	352
L10	Paraplegic	6	3	0.02	0.5	taxi	Solid	-	none	spokes	5	sloped/uneven	1:6	hilly	0
L11	Paraplegic	0	0	1	1	bus taxi	Pneumatic	-	pick-up	axle	1	sloped/uneven	1:10	hilly	455
L12	Paraplegic	2	2	-	0.1	Hire	No-More-Flats	-	none	none	2	sloped/uneven	1:9	hilly	382
L13	Paraplegic	2	4	-	0.5	-	No-More-Flats	6	none	handrims,bearings	3	flat	neg	flat	250
L14	Polio	6	0.05	1	0.2	Taxi	Pneumatic	0.3	-	axle	-	uneven	-	hilly	120
L15	Paraplegic	4	1	13	0.02	Company	No-More-Flats	1	tilt/balan	castors,axle	12	flat	1:6	mountainous	300
L16	Paraplegic	-	0.3	0.3	0.5	Bus/Taxi	No-More-Flats	6	none	axles,spokes	6	flat/uneven	1:5	mountainous	100
L17	Paraplegic	2	1	2	2	Bus/Taxi	Pneumatic	4	none	handrims,upholstery	6	flat	neg	flat	100
L18	Paraplegic	1	3	-	0.2	Private	No-More-Flats	-	tilt/balan	castors,spokes,upholstery	5	flat/uneven	1:8	mountainous	331
L19	Paraplegic	0	0.4	0.4	0.02	Taxi	No-More-Flats	36	none	spokes,frame	-	flat	1:0	mountainous	670
L20	Paraplegic	0	1	0.01	0.01	Hire	No-More-Flats	-	none	castors,bearings	4	flat/uneven	1:19	hilly/mountainous	693
L21	Paraplegic	0	1	0.01	0.02	Hire	Solid	-	none	bearings,upholstery	4	flat/uneven	1:12	hilly/mountainous	700
L22	DoubleAmp	0	7	7	0.3	Hire/Bus	No-More-Flats	-	none	upholstery	5	flat/uneven	1:7	mountainous	150
L23	Paraplegic	3	2	-	0.1	Hire	No-More-Flats	0.3	pick-up	cross-brace,castors,upholstery	2	flat	1:10	flat/hilly	240
L24	Paraplegic	0	2	2	0.5	Taxi	No-More-Flats	0.1	tilt/balan	cross-brace,castors,spokes,upholstery	3	flat/uneven	1:6	hilly	240
L25	Paraplegic	0	1	2	1	Taxi	Solid	0.1	pick-up	cross-brace,frame,upholstery	2	flat	1:6	hilly	210
B1	Paraplegic	7	0.02	1.5	0.01	Bus/Taxi	Solid	6	none	castor,axles,spokes	3	flat	1:9	flat	60
B2	Paraplegic	3	0.02	1.5	0.01	Bus/Taxi	Solid	-	none	-	-	flat	1:9	flat	40
B3	Quadriplegic	0	0.02	1.5	0.01	Bus/Taxi	Solid	-	none	-	-	flat	1:9	flat	115
B4	Paraplegic	0	0.25	5	0.5	Bus/Taxi	Pneumatic	6	-	punctures,frame	5	flat	neg	flat	365
B5	Paraplegic	0	1	3	-	Taxi	Solid	-	none	-	-	flat	1:20	flat	53
B6	Double Amp	0	2	1	-	Bus	Solid	-	none	-	-	flat	1:30	flat	120
B7	Birth Def	6	0.01	-	0.01	Ambulance	Solid	12	none	cross-brace,footrest	3	flat	1:15	flat/hilly	150
B8	Polio	5	2	1	-	Bus	Pneumatic	-	none	-	-	flat	1:15	flat	95

- : not asked

Table 4.1 Selected information from the surveys

The miners in Lesotho with lower incomes had been injured prior to 1977, up to which time injured workers were paid a relatively small lump sum and no pension. In Bophuthatswana, B4's income was high because he was receiving an accident pension from his previous company, but the incomes of all the others were very low here, as most did not receive pensions.

The distances to public transport given in Table 4.1 are important because all the interviewees usually travel to town at monthly intervals. As a result everyone emphasised that it was important for the mobility aid to be transportable. The hiring of vehicles, an expensive undertaking, was mainly used by people with higher incomes living far from public transport. In Bophuthatswana no-one hired transport because their incomes were too low.

No-more-flats inserts, which do not require inflating but have similar properties to pneumatic tubes, have been found to be the most suitable for rural areas. Initially such inserts consisted simply of a garden hose. Present commercial inserts have a solid cross-section of spongy rubber. When these inserts are punctured, the tyres do not deflate. Solid tyres wear relatively quickly and make negotiating rough ground more difficult. Tyres with pneumatic tubes puncture easily. Although most interviewees in Lesotho use tyres with no-more-flats tubes, a surprising number of tyres with pneumatic tubes and solid tyres are still used there. Because of ignorance of their existence no-one in Bophuthatswana uses tyres with no-more-flats tubes.

In a conventional wheelchair it is essential, for maximum mobility, that a user be able to tilt and balance the wheelchair. The castors must be able to be lifted off the ground so that the rear wheels can be used to negotiate any obstacle. The rear wheels have less rolling resistance than castors, therefore they are more effective on rough ground. Only three paraplegics in Lesotho could tilt and balance their wheelchairs and three others were able to pick up and immediately drop their castors to cross obstacles. No-one interviewed in Bophuthatswana was able to do either. A revolutionary break-through, resulting in the invention of a mobility aid which does not require any skill to manoeuvre it, is difficult to conceive. An improved mobility aid will, most likely, require the use of certain

skills. Therefore skill in manoeuvring a wheelchair should be taught to users during their rehabilitation.

Obstacles were also found at the houses of paraplegics. A few doorways were too narrow for wheelchairs. Certain houses had single steps which were difficult to negotiate without assistance. In some houses furniture prevented free movement.

At most houses the ground around the house was flat but it was uneven in many cases in Lesotho and in some cases there it even sloped, as shown in Table 4.1. In Lesotho only the western part of the country was surveyed and many of the paraplegics interviewed lived in the foothills. By comparison eastern Lesotho is mountainous. The maximum gradients around houses were measured to establish with what steepness of gradient the mobility aid would have to be able to cope. In Lesotho gradients of 1 in 5 and steeper were found, whereas in Bophuthatswana steep gradients were unusual. In the case of the three interviewees there, marked with a 1:9 slope, all three lived in the same house making this specific gradient less significant.

From the survey it was found that a wheelchair would normally last longer if it were regularly maintained or used efficiently; it will usually need to be replaced after a short period of between two and twelve months if it is not well maintained or used over rough ground.

Figure 4.1 illustrates the frequency of failures of various parts of wheelchairs. Upholstery, spokes and castors are the most recurring failures. Looseness or impact loading usually cause failures in spokes. The frequency of failures of the wheels indicates that the moving parts on the wheelchair are the most likely to fail. When designing a new mobility aid, emphasis should be placed on the design of moving parts. Upholstery failures are mainly due to stress concentrations at their points of connection to the frame. People who have had no failures have been using their wheelchairs in most cases under two years.

4.4 *Wheelchair Tests*

For the final survey in Lesotho and the survey in Bophuthatswana an Everest and Jennings wheelchair was tested.

In Bophuthatswana trials were mainly carried out in Mareetsane, a typical Bophuthatswana village, approximately 20 km from Gelukspan hospital in terrain with gentle slopes. In Lesotho the wheelchair was tested close to the houses of the interviewees. Paths, which had presented difficulty to interviewees, were attempted. Vegetation, uneven ground and the gradients made such journeys at times extremely strenuous and difficult to negotiate and on one occasion, impossible.

Weight distribution is important because it is easy to topple on slopes. Going down slopes, a wheelchair needs to be tipped and balanced (as in Figure 4.2), in

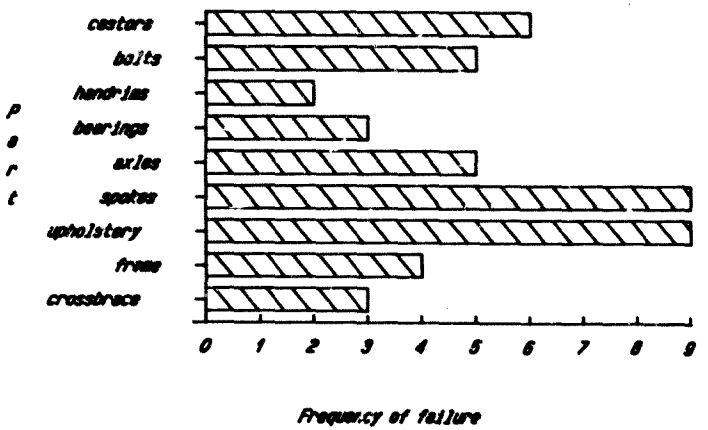

Figure 4.1 Frequency of failures of parts of wheelchairs

this way effectively distributing the weight along one line of contact, otherwise the wheelchair topples forward. Progress is slow up steep hills (gradients of approximately 1:5), because a wheelchair cannot be tilted easily and safely.

A further difficulty experienced when going uphill is a stop-start motion due to the intermittent push applied at the handrims. To overcome gravity a continuously applied force (continuous power cycle) is required.

Loss of traction is mainly due to loose sand and stones. Under these conditions tipping the wheelchair improves traction. On uphill gradients the loss of traction is even greater making progress more difficult.

In Bophuthatswana corrugations in the roads were difficult to travel over. The corrugations resembled many successive obstacles, which interfered with the castors. When riding in deep sand (70 mm deep) it was found that the narrow drive wheels cut through the sand thus coming into contact with the harder ground underneath. This eased travel when tipping the wheelchair.

During one excursion a 1m wide stream was crossed without too much difficulty there being no mud, but the handrims were made slippery by the water. The only way to continue pro elling the wheelchair was by gripping the tyres instead of the handrims. If a wheelchair is used in rain the effect would be similar but with the added difficulty of mud. Wheelchair users tend to avoid mud, because progress in mud is virtually impossible in a conventional wheelchair.

The mobility in a wheelchair over grass is impeded if the castors are not lifted. The high rolling resistance of the castors causes this to occur. Rolling resistance is inversely proportional to the square of the diameter of a wheel. With an increase of only one and a half times of diameter of a wheel, the rolling resistance can be reduced by more than half.

The footrests are the stationary parts on a wheelchair which come closest to the ground when going through dips or over bumps (see Figure 4.3). They may hit an obstacle and cause toppling. Therefore, the height of the footrests and their position relative to the castors must be carefully reconsidered.

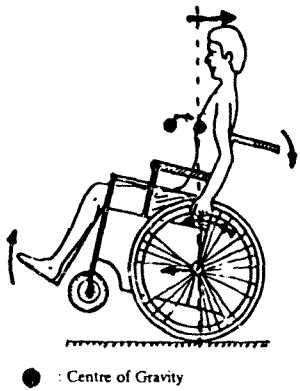

Figure 4.2 Tipping and balancing a wheelchair

When trying to negotiate a step, the writer cut his hands when they were jammed between the hand brakes and the tyres, because the brakes are presently positioned close to the end of an average pushing cycle. This affects the user when he tries to accelerate quickly or to negotiate a steep hill. The hand brakes should be positioned further down and be so designed that the user cannot be injured. In the final Lesotho survey, it was noticed that agile paraplegics had removed their handbrakes.

4.5 Evaluation of the wheelchair tested in Lesotho

To determine the extent of failure of parts on a conventional wheelchair in rural areas, the wheelchair used by the writer in Lesotho was dismantled. It was found that both drive wheels had buckled because of impact loading when negotiating rugged descents, both castors were showing signs of wear, and the upholstery had begun tearing at its connections to the frame resulting in wheelchair misalignment.

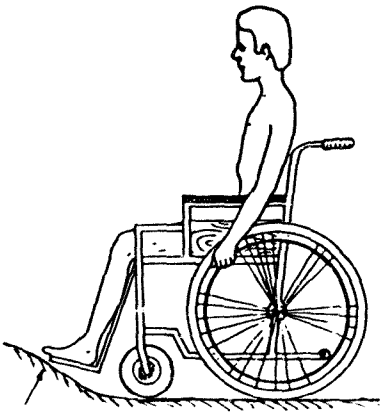

Figure 4.3 Footrests getting caught in obstacles

The failures and the wear of the wheelchair used by the writer were similar to those experienced by interviewees. This indicates that, if a conventional wheelchair is used effectively for two weeks in Lesotho, it requires repair. The new mobility aid therefore needs to be much more robust.

4.6 Desirable characteristics of a rural area mobility aid

As a result of the experience described above, the following characteristics are considered essential:

1. Wheels larger than 250 mm diameter (the present diameter of 200 mm is too small);
2. Gears be designed for steep climbs;
3. Accessories to provide continuous driving motion (for example a hand pedal and chain);
4. Hand-brakes be removed or placed out of the way;

5. The new mobility aid must be robust enough for rough ground;
6. The mobility aid should have enough traction to traverse the ground for which it is to be designed.

4.7 Other Mobility Aids

Three mobility aids other than conventional wheelchairs were found in Bophuthatswana and two in Lesotho. Three were tricycles of similar layout, one a bicycle with a side wheel and one a lever operated wheelchair.

In the lever operated chair the levers were connected to the back wheels by con-rods. Steering was done through linkages connected to the castors. The mobility aid was stable and could travel relatively fast on hard ground. The variable torque on the wheels resulted in difficulties on sandy ground.

The following three tricycles of similar layout were propelled through their front wheel. Their traction properties were therefore not very good because a small proportion of their total weight lies on the front wheel. If tricycles are to be made suitable for rural areas, they will need better traction characteristics.

A tricycle built by Gelukspan Hospital was unstable when cornering or negotiating uneven ground. The severe instability was caused by the high seat and the narrow wheelbase at the rear. It is operated with hand pedals mounted on the steering arm. They are difficult to operate because of a high gear ratio and friction caused by the chain rubbing over a bar.

In Lesotho L14 (Table 4.1) built a tricycle using bolts and no welding, which is a good way of constructing a mobility aid in rural areas because most interviewees are able to replace bolts on their wheelchairs. Most of the materials for the tricycle were collected from a scrap heap. When testing this tricycle a few design faults were encountered: The chain was exposed causing one's arms to be easily soiled. The chain came off easily when turning right. A high gear ratio was used making it difficult to accelerate. Slipping occurred on inclines and uneven ground.

The second tricycle in Lesotho, built by L18 (Table 4.1), proved to be the best home-made tricycle tested by the writer. Stability was relatively good, although it was very similar in design to the tricycle built by Gelukspan hospital. It had a good turning circle and three gears to ease pedalling. Its disadvantages were that it had little traction up inclines and no means of braking.

The bicycle with sidewheel designed and built by Jonas Molakeng, an employee of Gelukspan hospital, was relatively unstable although less so than the Gelukspan tricycle. It is propelled with the right hand and steered with the left using a bicycle steering fork, which made it easy to operate and steer. A disadvantage, which could result in upper body imbalance, is that only the right arm is used for propulsion.

4.8 Workshops

Simple repairs of wheelchairs can usually be done by the disabled person. For anything more sophisticated, workshop repair facilities are required. Manufacturing facilities, close to the user, would be an advantage. Facilities were investigated in Bophuthatswana and Lesotho.

In Bophuthatswana two workshops for disabled people were inspected. They have a guillotine, a rolling machine, a sheet bender, welding and flame cutting facilities between them. It was not certain how good the workmanship was in these workshops.

In Lesotho the towns of Maseru, Quthing and Mohales Hoek were studied. In Quthing, the Leloaleng school of motor mechanics had repaired a wheelchair not seen by the writer. Work in progress by final year students was found to be poor. In Mohales Hoek three workshops were inspected. Bedco, on the outskirts of the town, manufactures various items including school desks and ox-carts. These items were of a reasonable standard. Mohales Hoek Motors had welding facilities but the workmanship was poor. Shale Welding Workshop produced items with tack welds, which made the standard of work difficult to assess. In Maseru,

Lesotho Steel had the capability of both machining and welding. The workshop had standards similar to those found in Johannesburg. Willie's Workshop at Bedco in Maseru had once been approached to manufacture a Malawian wheelchair, although it had not yet done so. The facilities and standard of work were reasonable. One person interviewed in Mafeteng had had his cross-brace repaired, indicating that facilities existed in Mafeteng.

Generally it is possible for wheelchairs to be repaired in both Lesotho and Bophuthatswana.

4.9 Conclusions

The following problems have been identified from the surveys:

1. The uneven terrain and a variety of surfaces (sand, stones, grass, mud, etc);
2. Steep gradients of up to 1:5;
3. Narrow doorways;
4. Steps leading into houses;
5. Mechanical failures of wheelchairs.

Conclusions drawn during the surveys were:

1. Personal experience in a wheelchair indicated new difficulties such as corrugations in roads;
2. The mobility aid should be transportable;
3. It would be advantageous not to require any special skills. Presently most paraplegics cannot tip the wheelchairs, an essential skill in negotiating rough ground.
4. The significant similarity of parts' failure encountered by the writer and interviewees. The parts which fail most often are:
   a. Upholstery
   b. Drive wheels
   c. Castors
5. The following are considered to be important characteristics of rural area mobility aids:

a. Stability
b. Gradient climbing ability
c. Robustness
d. Traction

6. Facilities for repair of a mobility aid are available in major rural towns, although the standard of work is not always satisfactory.

5.0 Selection Criteria

Using the surveys in rural areas, requirements, constraints and criteria were extracted to be used later to select one concept design.

5.1 Requirements

1. The mobility of paraplegics in rural areas must be increased significantly.
2. Every paraplegic, including those with injuries at level T1, must be able to use the mobility aid.
3. The mobility aid will be manually operated.
4. It must have adequate traction properties for general rural conditions.
5. There must be easy access into and out of the mobility aid.
6. The mobility aid must:
   a. be continuously propelled;
   b. be robust;
   c. be reliable, to minimise major repairs;
   d. support both the trunk and the limbs of the paraplegic;
   e. be stable;
   f. be able to enter the home;
   g. be able to be repaired in the rural environment;
   h. be able to climb hills of a gradient of at least 1:5;
   i. be transportable.

5.2 Constraints

1. The design must allow for variance in weight and physical dimensions of paraplegics.
2. The limited physical strength of some users will constrain the design.
3. The acceptable minimum of manoeuvrability and some of the physical dimensions of the mobility aid will be determined by the requirements (for example doors) within the home.
4. Only the upper part of the paraplegic's body can be used for propulsion.

5. The poverty of most people in rural areas requires that the cost of the mobility aid must not be too high.

5.3 Criteria

1. The stability should be adequate to avoid toppling when encountering uneven or steep ground.
2. Rolling resistance should be minimised.
3. The user should be able to move without assistance as far from his home as possible.
4. Those parts of the mobility aid on which the paraplegic can injure himself should be eliminated.
5. Vision should be unrestricted.
6. Prevention of pressure sores should be taken into account in the design of the seat.
7. The mobility aid should be able to cope with single steps.
8. It should be possible to drive the mobility aid over grass, muddy and sandy ground or combinations of these.
9. When negotiating mud, no mud should come into contact with the user.
10. The material used should be easy to process.
11. Material and spare parts used should be readily available in rural areas.
12. The mobility aid should be easy to manufacture and repair.
13. No special skills be required to operate the mobility aid.
14. The mobility aid should:
    a. have good handling characteristics.(eg steering, cornering, etc..).
    b. be comfortable.
    c. be socially and psychologically acceptable to the paraplegic.
    d. be light enough to be propelled relatively easily.
    e. be able to withstand rough handling.
    f. require infrequent and minimal maintenance.
    g. have suspension for good traction, stability and robustness.
    h. have a variable seat width.
    i. have a variable centre of gravity to allow for the differing proportions of paraplegics.

j. be corrosion resistant.

k. have a sag-free upholstery.

6.0 Concept Design

Brainstorming was used to conceptualise a number of new ideas, which were then analysed using the requirements, constraints and criteria. Certain concepts, of which some appear in Figure 6.1 were, for various reasons, discarded at an early stage.

6.1 Modified conventional wheelchair

A modification of the conventional wheelchair (Figure 6.2) has the advantage that it can be tilted and balanced without fear of falling backwards. The user therefore does not need to learn how to balance the chair. This method makes tilting on downhills safe, but when going up hills, the user is in a very uncomfortable position (Figure 6.3).

This modification will help only the person who is unable to tilt and balance his wheelchair, leaving unresolved some difficulties, including the reliability of the wheelchair.

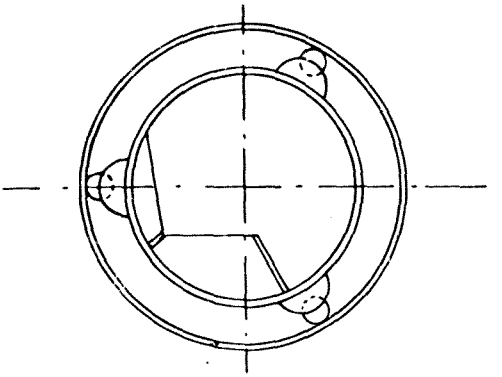

a) The vertical roller

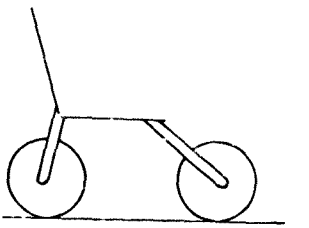

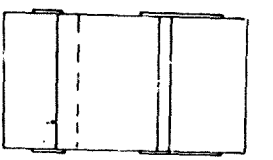

b) The double roller

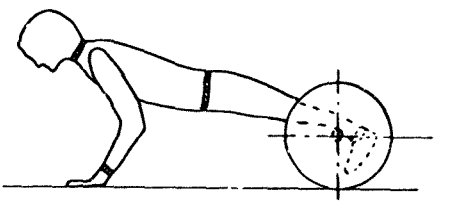

c) The axle roller

Figure 6.1 Concepts rejected at an early stage

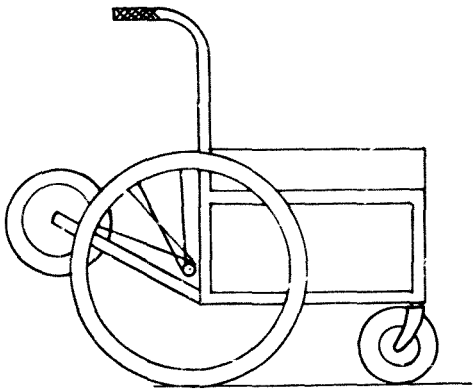

Figure 6.2 Modified conventional wheelchair

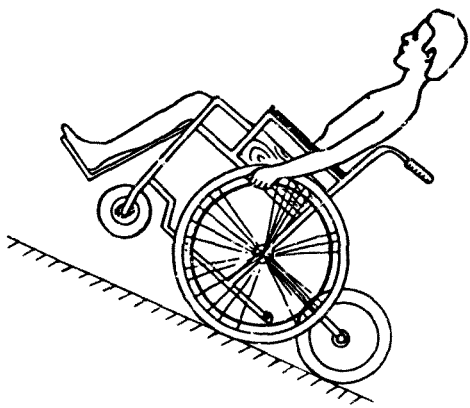

Figure 6.3 Uncomfortable position using modification

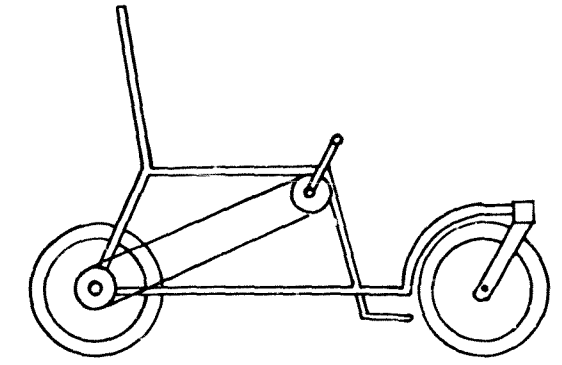

Side view

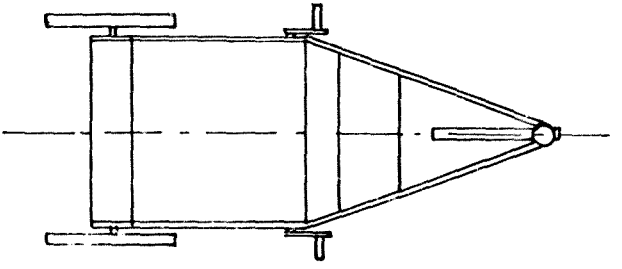

a) The tricycle

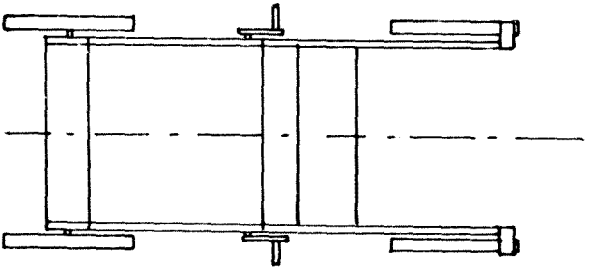

b) The four wheeled vehicle

Figure 6.4 Double independent rear driven chain drive vehicles

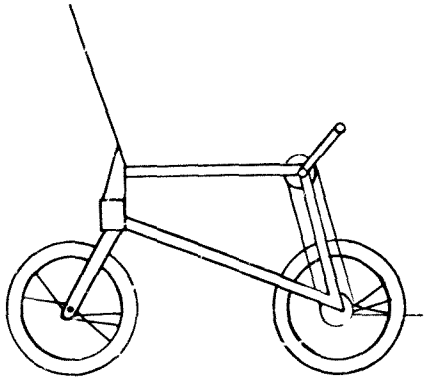

Figure 6.5 Double independent front driven chain drive vehicle

6.2 *Independent Chain Driven Vehicles*

The vehicles in Figures 6.4 and 6.5 are steered as well as driven with a chain drive connected to a drive wheel on either side of the mobility aid. Steering is executed by a differential action.

The tricycle (Figure 6.4(a)) and four-wheeled drive vehicle (Figure 6.4(b)) are similar except that the tricycle has one front castor and the four-wheeled rear driven vehicle has two. Tricycles are unstable because the centre of gravity can easily shift out of the triangle of support and they are, therefore, unsuitable for rural areas.

The four-wheeled front driven vehicle (Figure 6.5) would be shorter than rear driven vehicles. The castors are at the back below the seating surface where there is ample space for the movement of the castor. The rear driven vehicles need the castors to be in front of the feet, so as not to interfere with the feet.

For vehicles going up hills the weight distribution changes in that there is more weight on the rear wheels. For the rear driven vehicles this increases traction, whereas for front wheel driven vehicles traction is decreased. This is serious for front wheel driven vehicles as the rear wheels then have to bear more weight.

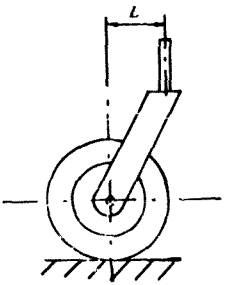

Figure 6.6 Castor Configuration

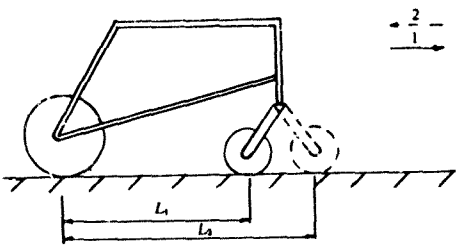

Figure 6.7 Wheelbase of Mobility Aid

Both the front and rear driven vehicles have castors. Castors (Figure 6.6) have a lag L which causes them to swivel around the axle according to the direction

travelled. When reversing, the castor will reverse its position with respect to the frame as shown in Figure 6.7. For the front wheel driven mobility aid the wheelbase length will be L2 when travelling forwards and L1 when reversing. For a mobility aid of short wheelbase this is a dramatic change in wheelbase especially as mobility aids are usually designed for forward motion. In the case of the rear driven vehicle the wheelbase is increased when reversing.

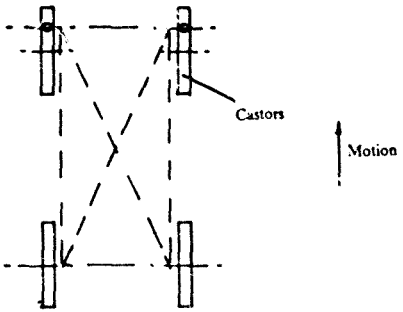

Figure 6.8 Configuration of the rear driven mobility aid

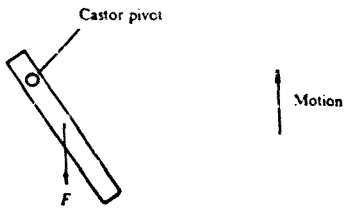

Figure 6.9 Friction force acting on the castor

6.2.1 Stability of rear and front drive mobility aids

A free-wheeling rear wheel drive mobility aid (Figure 6.8) can be disturbed by an unbalanced force either at the castors or at the rear wheels. If one of the castors is disturbed by a transverse force, a friction force F (Figure 6.9) will start to act at the contact point of the castor because the castor is not rolling in the direction of motion. The moment induced by the friction force will return the castor to its original position. If one of the rear wheels is acted on by a transverse force, the wheels and the frame will move around the castor bearings (Figure 6.10). The mobility aid will still be travelling forwards and a friction force will start acting at the rear wheels to oppose that motion. These wheels, as in the case of the castors, will not be rolling in the direction of motion. Assuming the two friction forces to be equal, the resulting moment about the centre of mass is a restoring moment. Furthermore, the relative attitude of the four wheels causes rotation towards the original direction of motion. The rear driven mobility aid is therefore stable when free-wheeling.

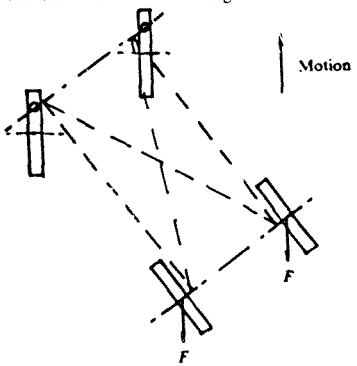

Figure 6.10 Out of line configuration of the rear driven mobility aid

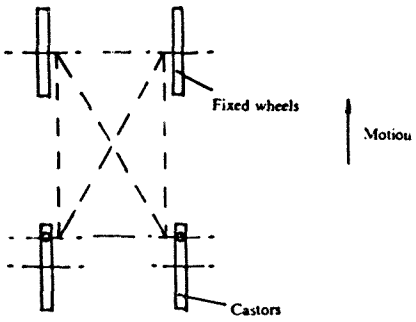

Figure 6.11 Configuration of the front driven mobility aid

A free-wheeling front driven mobility aid can also disturbed either at the driving wheels or at the castors. If the castors are disturbed, they will return to their original position as described before with the aid of Figure 6.9. If the driving wheels are acted on by a transverse force, the frame and fixed wheels will move about the castor bearings as shown in Figure 6.12. In contrast with the previous case, both the resultant moment and the relative attitude of the four wheels tend to rotate the vehicle away from the original direction of motion. The front wheel driven mobility aid is therefore directionally unstable while free-wheeling.

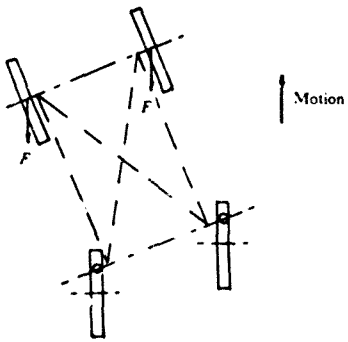

Figure 6.12 Out of line configuration of the front driven mobility aid

The conclusions reached above are reversed when the mobility aid is free-wheeling backwards.

6.3 *Walker designs*

The concept of a walker (Figure 6.13) is based on the walking patterns of an insect (Appendix A.3). The two possible walking patterns are the alternate tripod walking stance and the sequential stepping method (Appendix A.3). The tripod stance is faster and the less stable of the two. The most effective for a mechanical device is a combination of the two where legs are lifted sequentially using the tripod stance. Instead of three legs, four legs will always be in contact with the ground. Differences in the levels of ground can be allowed for by incorporating suspension. By doing this, more moving parts would be added to a mechanism which already has too many. At present all research into walking mechanisms has been done using robotics (Appendix A.3.3).

6.4 *Tracked design*

The tracked design shown in Figure 6.10 consists of tracks driven by independent chain drives. The principle is similar to that used in existing earthwork

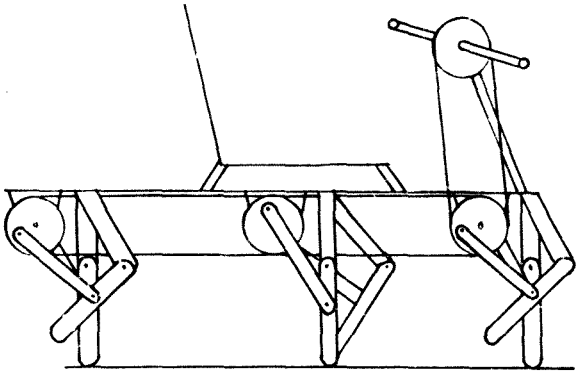

Figure 6.13 Walker

machinery, which is required to negotiate awkward terrain. A large contact area with the ground reduces sliding and makes for easier travel over mud or loose sand. It also means t[illegible]e moments are required to steer and manoeuvre the

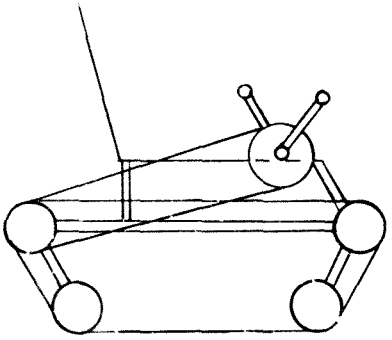

Figure 6.14 Tracked Design

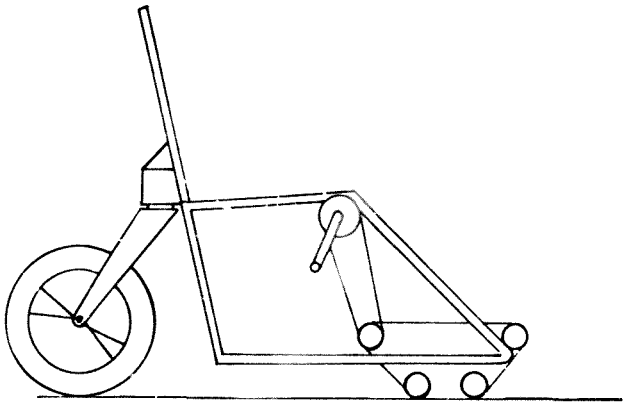

Figure 6.15 A Wheeled Tracked Design

vehicle. The tracks are susceptible to being dislodged from the runners because of shear with the floor. In addition to its poor mechanical performance, the cost would be high because many non-standard parts would have to be used.

6.5 *Wheeled-tracked combination*

Wheeled-tracked combinations consist of one or two tracks in front and two wheels at the rear as illustrated in Figure 6.15. The tracks give the advantages mentioned in the previous section and the wheels improve manoeuvrability. If driven through the tracks, the vehicle will be difficult to steer. If driven through the wheels, the track may slide instead of rolling, especially when cornering.

6.6 *Air cushion*

An air-cushion, as used in a hover-craft, would be a reasonable solution. Instead of physically trying to negotiate the ground, one could float over relatively flat

terrain. The ergonomics could be made to suit a variety of paraplegics. One problem is that this device would need to be propelled by a motor. This means that the paraplegic does not physically propel himself implying that upper body muscle tone would be lost. It could not be used within the home and would be difficult to service in rural areas. The cost would be too high and it would be a likely target for thieves.

6.7 Comparison of Concept Designs with respect to Requirements and Constraints

Concept designs were compared with the requirements and constraints. Not one of the designs managed to fulfil all of them. A numerical table (Table 6.1) was drawn up to indicate the relative value of the proposals. For complying with a requirement or constraint 5 or 10 positive points were given and for failing 50 or 100 negative points. This method, although subjective, gives a rough indication of the suitability of the various designs. Requirements 2,5 and constraints 1,4 are not presented in Table 6.1 because all concept had equal scores for these conditions.

In Table 6.1 only the rear independent chain driven vehicle achieved a positive total. If a compromise is made by removing the constraint concerning manoeuvrability within the home then the rear independent chain drive vehicle will be a satisfactory solution.

When comparing the concepts to the criteria (Table 6.2), the three and four wheeled rear driven vehicles had the best totals. Criteria 4, 5, 6, 14b, 14c, 14d, 14g, 14h, 14i, 14j, 14k are not presented because all concept designs achieved equal scores.

6.8 Selection of Mobility Aid

Although the rear chain driven four wheeled vehicle had the best score with respect to all the specifications, the scoring was not very accurate. It was decided, therefore, to consider also the other chain driven wheeled vehicles which had the

Concept Design	Requirements												Constraints			Total
	1	3	4	6a	5b	6c	6d	6e	6f	6g	6h	6i	2	3	5	
Modified wheelchair	5	10	0	-100	0	-50	10	5	10	10	-50	0	10	-50	0	-190
Rear driven tricycle	10	10	0	10	5	5	10	-100	10	10	10	5	10	-50	10	-45
Rear driven four wheeled	10	10	0	10	5	5	10	10	10	10	10	0	10	-50	10	60
Front driven four wheeled	10	0	-100	10	5	5	5	10	10	10	-50	10	10	10	10	-45
Walker	10	10	10	10	-100	-100	10	10	5	-50	10	5	10	-100	-50	-310
Tracked design	10	10	0	10	0	0	10	10	10	-100	10	0	-100	-100	-50	-280
Wheeled/tracked wheel drive	10	10	0	10	0	0	10	10	10	-100	10	0	0	-50	-50	-130
Wheeled/tracked track drive	10	10	0	10	0	0	10	10	10	-100	-50	0	0	-100	-50	-240

Table 6.1 Comparison of concepts with respect to the requirements and constraints

next highest scores. Therefore the final choice of mobility aid was between the front and rear wheel independent chain driven vehicles. In the areas surveyed the houses, although small, has two or three large rooms and little furniture. Manoeuvring within these houses was not difficult. Because of limited mobility on rough ground, most paraplegics are confined to within about 10m of their houses without assistance. A definite improvement in mobility on rough ground is therefore more important than good manoeuvrability. The rear driven vehicle was thus chosen.

A few of the conceptual designs described in 6.1 and 6.2 use an independent chain driven mechanism, where the pedals are out of phase most of the time. It was considered necessary to test such a drive mechanism but no vehicle with such a drive was readily available and no reference to such a drive was found in the literature. Luckily a front driven double independent chain driven wheelchair (Figure 6.16) was found and salvaged from scrap. It was rebuilt and tested. Double independent chain drive was shown to work. It was found that it could negotiate a 1:8 ramp better than a conventional wheelchair. Continuous powering of the pedals was the main reason for this improvement. Steering was found to

Concept Design	Criteria																Total
	1	2	3	7	8	9	10	11	12	13	14a	14c	14f				
Modified wheelchair	0	0	-5	10	-10	-10	10	10	10	10	5	-10	-10				10
Rear driven tricycle	10	10	5	10	5	10	10	10	10	-5	-5	0	0				70
Rear driven four wheeled	10	10	10	10	5	10	10	10	10	-5	10	5	0				95
Front driven four wheeled	-10	10	5	-10	5	10	10	10	10	-5	10	0	0				35
Walker	10	10	10	10	10	10	5	-5	-5	0	-5	-5	-10				35
Tracked design	10	10	10	10	10	10	-5	-10	0	0	-10	0	0				35
Wheeled/tracked wheel drive	10	10	10	10	5	10	-5	-10	0	0	0	0	0				30
Wheeled/tracked track drive	10	10	10	10	10	10	-5	-10	0	0	-10	0	0				35
Air Cushion	10	10	10	10	10	10	-10	-10	-10	-10	10	5	0				35

Table 6.2 Comparison of concepts with respect to the criteria

be unstable and traction inadequate, thus confirming the disadvantages of front-wheel drive as discussed in previous sections of this chapter.



Figure 6.16 Rebuilt Front Wheel Driven Mobility Aid

6.9 *Concept Design Conclusions*

1. No concept design fulfils all the original requirements and constraints.
2. Conventional type mobility aids are the most likely to fulfil most requirements and constraints.
3. The rear driven vehicle was found to be most suitable, even though it was not as manoeuvrable and compact as the front wheel driven vehicle.
4. Some of the concepts described in this chapter and rejected for this application may be more suitable in other situations.

7.0 Detail Design

7.1 Overall Design

The overall design was attempted using manikins (Appendix B) and a drawing board. The dimensions in Figure 7.1 were found by fixing certain dimensions (as detailed below) and using three manikins to find others. The three manikins used were 2.5th, 50th and 97.5th percentile statistical people. Figure 7.2 shows the 97.5th percentile manikin seated in the prototype.

The total length was restricted to 1400mm (Neville Cohen (3)) so that the mobility aid would be more manoeuvrable. The rear and front wheel sizes were chosen by taking into account rolling resistance. The wheels needed to be as large as possible but should not interfere with the incumbent. A 16" (405 mm) wheel was therefore selected for the rear wheel and 12" (304mm) for the front so as not to interfere with the feet. The reclining angle of the seat was made 15 degrees upwards from the back of the seat using tests done with an adjustable chair (Figure 7.3) designed by the author. This angle causes more weight to be transferred to the backrest, thus lessening the possibility of pressure sores. For uneven ground the clearance height needed to be at least 150mm close to the wheels and 200mm elsewhere.

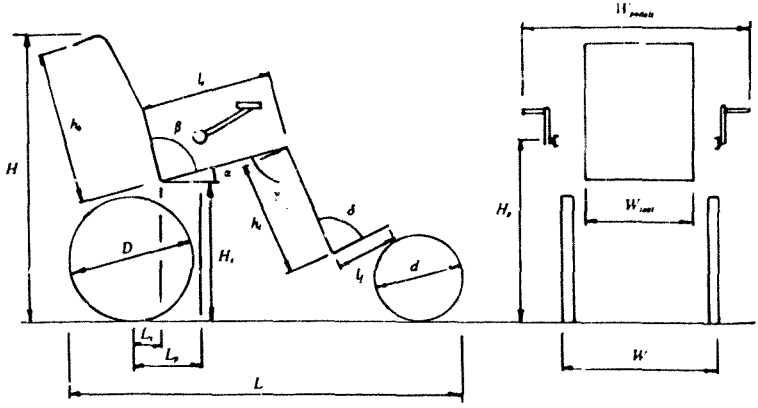

Figure 7.1 General dimensions of the mobility aid

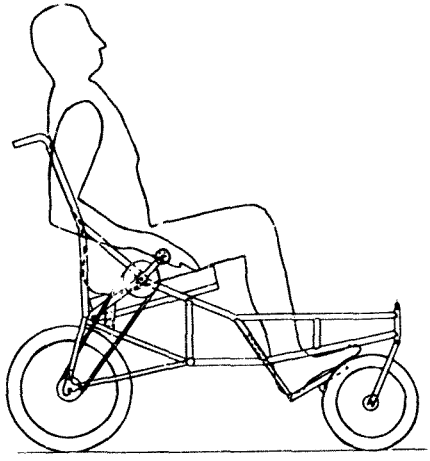

Figure 7.2 97.5th manikin seated in the prototype

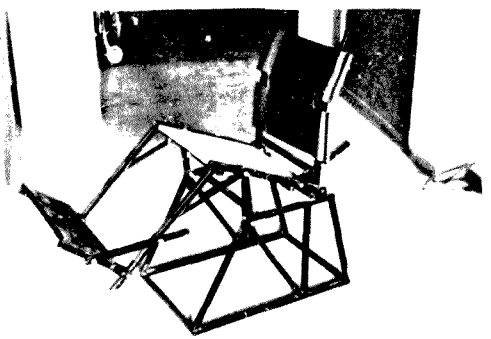

Figure 7.3 Adjustable Chair

A seat length of 400mm was chosen using the 2.5th percentile manikin. It was found that dimensions for the seating posture, except the footrest, could be fixed for all three manikins. The footrest had to be adjustable. The occupant's seat had to be moved as far back as possible to keep to the specified wheelbase without compromising the rearward stability on 1:5 slopes. The interaction between the lowest point of the footrest and the castors determined the final length of the mobility aid.

The total width had to be less than 650mm so that the mobility aid could pass through doorways. This dimension would be either that between the pedals or the distance between the wheels. The seat width needed to be 450mm so that the 97.5th percentile person could be accommodated. This meant that, with a knob type pedal, the width at the pedals would be 650mm. The chain therefore had to be attached to the outside of the rear wheels, or else the maximum width would be measured across the rear wheels. This would make the mobility aid over 700mm wide.

7.2 *Seat Design*

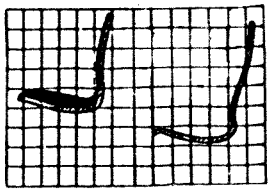

a) b)

Figure 7.4 Two seat contours judged to be the most comfortab' (McCormick(12))

There are three main aspects to consider in seat design:

1. The backrest
2. The seating surface
3. The relationship between the seating surface and the backrest.

The backrest should be designed to provide adequate lumbar support. This ensures that the pressure between vertebrae is minimised. Two chair contours suggested by McCormick (12) are shown in Figure 7.4. In the design of the mobility aid it was more effective to reproduce the curves of the chair in Figure 7.4(a). With the help of the three manikins (Appendix B), a curve similar to that in the chair in Figure 7.4(a) was produced. This shape will be relatively difficult to manufacture; therefore, instead of a curved back, one offset at a slight angle at the curvature of the spine was used. With canvas spanned between the two side frames , the curve in Figure 7.4(a) can be very closely reproduced using an offset backrest (Figure 7.5).

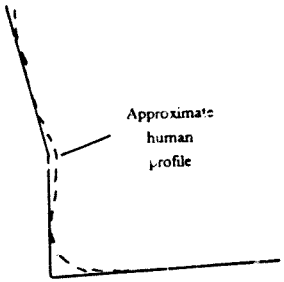

Figure 7.5 Chair with an offset backrest

The seating surface consists of a wooden plank with standard issue wheelchair cushioning. With this configuration a simple seating surface was made possible.

It was found that there was a need for a full-scale adjustable chair for testing angles of tilt, pedal positioning and other aspects. A chair (Figure 7.3) for this purpose was designed and built. A short survey was conducted in the Rand Mutual Hospital to establish the comparative comfort of seating at different angles. New features of the chair were also tested. Paraplegics commented on how the seat could be oriented. It was found that an angle of 15 ° upwards from the back was comfortable. They said that they would be prepared to sit in such a chair all day. This statement would need to be tested. Later, the position of the pedal crank was determined using the adjustable chair.

7.3 *Material Choices*

7.3.1 The Frame

The materials considered for the frame included GRP(glass reinforced plastics), plastics (polymers), aluminium, stainless steel and mild steel.

For minimum weight and corrosion resistance GRP, aluminium and plastics would be suitable choices, but they are not generally available in rural areas. GRP is a relatively new material which has not been used in a wheelchair and plastic has been used to a limited extent (2).

Both mild and stainless steel have been widely used in wheelchairs and are more available than the other materials. Stainless steel is corrosion resistant but is much more expensive than mild steel. As in the case of aluminium, the welding of stainless steel also presents difficulties. Mild steel is the cheapest and most freely available. It is also less susceptible to fatigue failure. It will also be the easiest material to repair in rural areas.

Hollow sections are the lightest for a given moment of area. Circular tubes were chosen rather than square because they had greater torsional and bending moduli for equal cross-sectional area and equal thickness (Appendix C). The square section would have equal strength for equal cross-sectional area if its outer dimension were increased and its thickness decreased accordingly. However, thin-walled square tubing is not readily available.

7.3.2 Backrest Material

The material for the backrest needs to be resistant to all types of weather conditions, as well as being light and economical. Its main requirement is durability.

Polyvinyl, Canvas and PVC canvas were considered. Most conventional wheelchairs use polyvinyl. Compared to PVC canvas and plain canvas, polyvinyl has a low elastic modulus, low tear resistance and is not durable. Plain canvas is

not weather resistant, but PVC canvas is. PVC canvas is reasonably priced and can be worked reasonably easily and was therefore chosen.

7.4 *Selection of standard parts*

For a mobility aid, which is not to be produced in large quantities, as many moving parts as possible need to be standard parts. This makes the mobility aid cheaper and easier to repair.

Moving parts need to replaced at certain intervals and should therefore be readily available. Bicycle parts were chosen as the main source of moving parts for the mobility aid. Chains, wheels, sprockets, chain wheel hubs, fork bearings and bottom bracket bearings would be used from bicycles. The forks for the castors would need to be manufactured because no suitable forks of the required size are available.

7.5 *Wheel Design*

7.5.1 Wheel selection

Three types of wheels were considered :

1. The walking wheel
2. The wide wheel
3. A BMX bicycle wheel

The walking wheel (Figure 7.6) consists of intermittent pads. As in walking, these pads are lifted and then placed in another specific position. This wheel would negotiate ground by stepping over instead of rolling over it. With two wheels out of phase on a mobility aid the ride would be uncomfortable although still effective. This wheel could possibly fail under impact conditions and would be heavy and expensive to manufacture.

The wide wheel (Figure 7.7) can be spoked and has a wide rim. A solid rubber tyre would then be used to absorb slight shocks. This type of wheel would also

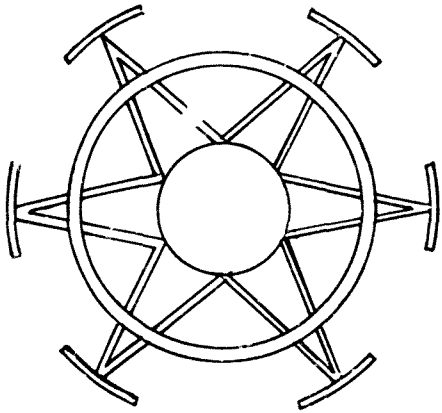

Figure 7.6 The walking wh el

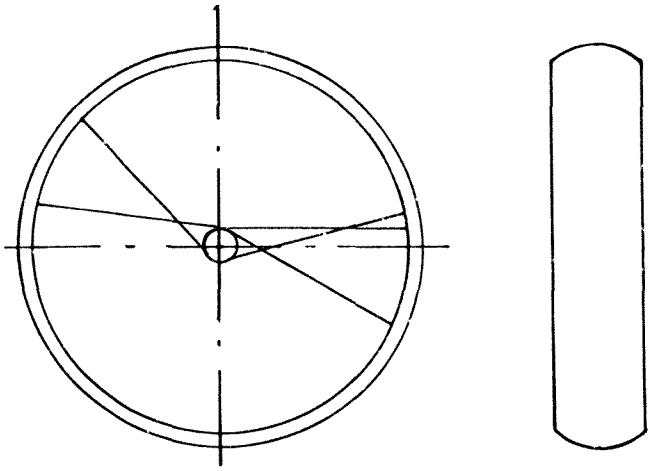

Figure 7.7 The wide wheel

be useful for muddy or grassy conditions. The wheel is slightly curved so that on harder surfaces it will be easier to manoeuvre the mobility aid. On surfaces like mud or sand, the whole width of the wheel will come into contact with the ground surface. Although the wheel is promising, it would be too wide to fit through doorways. The rim is not standard and as a result is expensive. A wide rim will increase the weight and the mass moment of the inertia of the wheel.

A standard bicycle rim was then considered because it would be less expensive than both of the above options. Bicycle traders stock these wheels, which make them easy to replace. A BMX rim and tyre, being slightly wider than a standard wheel will provide some of the advantages of the wide wheel discussed above without its disadvantages. It was thus decided to use $2\frac{1}{4}$" BMX tyres, the widest available.

7.5.2 Tyre Tubing

Three types of tubing are generally available:

1. The solid tube or tyre
2. Rubber or hose insert (Figure 7.8)
3. Pneumatic tyres

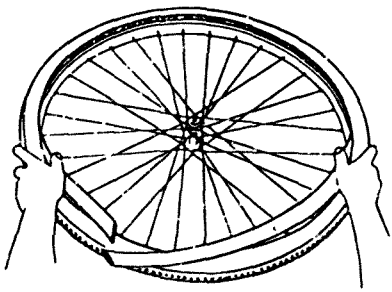

Figure 7.8 Rubber or Hose Insert (Hotchkiss (10))

From the surveys it was found that solid and pneumatic tyres were not suitable for rural use. Solid tyres usually deform so that they come out of their rims. They have minimal suspension giving an uncomfortable ride in rural areas. Pneumatic tyres provide a comfortable ride in rural areas but tend to puncture easily under such conditions.

Rubber or hose inserts (no-more-flats) are being used more often in rural areas today. They absorb a certain amount of shock and are puncture free, which makes them the best alternative for rural areas.

7.5.3 Wheel Support Structure

Two types of wheel support structure were considered :

1. Spokes
2. Full plastic frame support

Spokes, which are the most common type of support, tend to loosen periodically. If not tightened, the wheel may buckle. In the surveys it was found that this was the case with many paraplegics. Full plastic frame support (sometimes referred to as a Mag wheel) is an alternative, because no maintenance is required. But, if the support fails, the whole wheel usually needs to be replaced. With spoked wheels it is often only necessary to replace spokes or true the wheel.

In this design it was decided (Section 7.1) to choose whichever wheel was available as a standard unit. The rear 16"(400mm) wheels are spoked and the front 12" (305mm) wheels have full plastic frames.

7.6 Drive Design

The types of drive that were considered included :

1. Lever type drives

2. Chain drives

Lever type drives have been used for many wheelchairs. Most of the drives used are relatively complex and have made the wheelchair quite expensive. A lever operated wheelchair tested in surveys was found to be ineffective in sandy conditions (Bophuthatswana survey). This was for one type of lever drive only being the simplest version of such a drive encountered by the writer. The mechanism of the wheelchair in Figure 7.9 produces a varying torque dependent on the conrod. When stationary the conrod may be at the position where zero torque is produced therefore making it difficult to move. The Indicycle(16) lever drive uses gears and is relatively complex, making it heavy and expensive. Hogan (9) designed a lever drive with chains and sprockets, which seems heavy and unsuitable for rural conditions. Parts for lever drives are not available in rural areas.

Chain drives are more acceptable as parts are available in rural areas. Chain drives also deliver a more consistent power cycle than those with lever-operated designs, making travel smoother and more efficient. Chain drives were therefore selected.

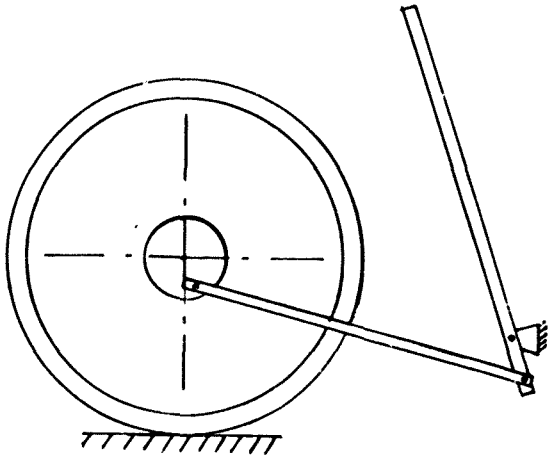

Figure 7.9 Lever Drive Mechanism

7.6.1 Gear and Drive System

For vehicles it is preferable to have more than one gear ratio. Three speed hubs as well as Derailleur systems are available. Both rear wheels would need to be fitted with identical systems. The same ratio on both wheels is required at all times, therefore one lever is required to operate them. Both sides need to be set up and maintained in exactly the same position. The cables on a Derailleur system tend to creep after being under tension for long (1 month to a year of continuous use) periods. The two sides will not necessarily creep equally making it possible for different gears to engage on each wheel. It is also not possible to reverse a Derailleur, making it less manoeuvrable.

With free wheeler hubs it is also not possible to reverse using the pedals. The drive sprocket is located on the right hand side of the wheel, therefore some

intermediate device is required for the left hand side. This device will increase the cost significantly.

Fixed sprockets seem to be the only acceptable solution. They can be placed on either side of the mobility aid and make it possible to reverse it. In addition these sprockets are relatively cheap.

An appropriate gear ratio was needed to negotiate slopes of 1:5. The wheel size was fixed (Section 7.1), therefore the two sprockets and the pedal arm could still be varied. The rear sprocket needed to be as large as possible to negotiate steep slopes. An 18 tooth sprocket is the largest for the particular fitting. For the front it was calculated (Appendix C) that a 14 tooth sprocket was required to negotiate 1:5 slopes. These calculations used the figures of the arm strength of a 5th percentile man.

7.7 *Brake Design*

A braking system other than reverse pedalling was required. Back pedal brakes were not selected because they limit manoeuvrability.

Calliper brakes were therefore chosen. Their operation requires the hands to be removed from the pedals. If the movement is executed quickly enough control over the wheelchair will not be lost. The prototype will be used to test this.

The brakes should be fixed to the rear of the mobility aid. The reason for this is that, if the occupant brakes too heavily or suddenly, the rear wheels could lift off the ground. Once the wheels are off the ground the mobility aid moves forward freely, thereby returning the wheels to the ground. If the brakes are fixed to the front wheels, the mobility aid could topple forwards.

8.0 Design Analysis

8.1 Stability

Stability needs to be considered when climbing hills of 1:5 gradient, accelerating, cornering or when riding on roads with a transverse slope. Stability was investigated by combining the centres of gravity of the mobility aid and each of 2.5th, 50th or 97,5th percentile people in turn.

With the occupant leaning right back, it was found that the mobility aid would start tipping up a slope at approximately 22° (Appendix C) for all people. If the occupant leaned forward at an inclination of 30° to the seat, the tipping angle was increased to about 32.5°. Both positions would be stable up inclines of 1:5 (11.3°). The second position demonstrates how greater stability can be acquired.

When accelerating, it was found that the mobility aid would tip backwards with a force of 360N at its rear line of contact with the ground. This is equivalent to 456N at the pedals, which can only be produced by a very strong person. The maximum applied force at the pedals by a weak person was expected to be 100N per arm, a total of 200N for both arms. The mobility aid is therefore not likely to tip under acceleration by weak people. Strong people can produce 530 N per arm and will have to regulate their acceleration so as not to topple backwards. The force at the pedals to induce toppling reduces to 448N for both arms when the mobility aid is inclined upwards to 11.3°.

The mobility aid was also stable in a sideways configuration (Figure 8.1), where the angle required to topple sideways was 17° (Appendix C). A sideways angle as high as this in a mobility aid is usually avoided because it is uncomfortable. The mobility aid is not expected to corner sharply at high speeds, therefore stability in cornering was not considered.

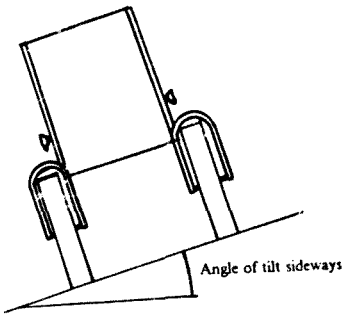

Figure 8.1 Sideways Stability

8.2 *Force and Stress Analysis*

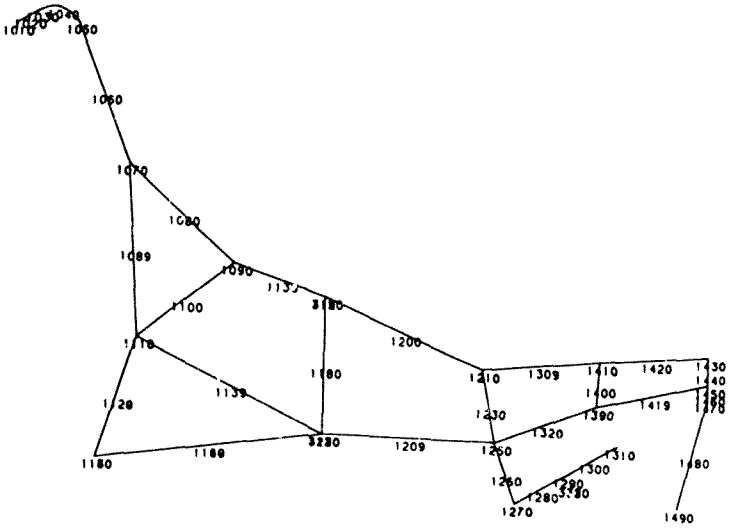

Figure 8.2a) Node Numbering of the Mobility Aid

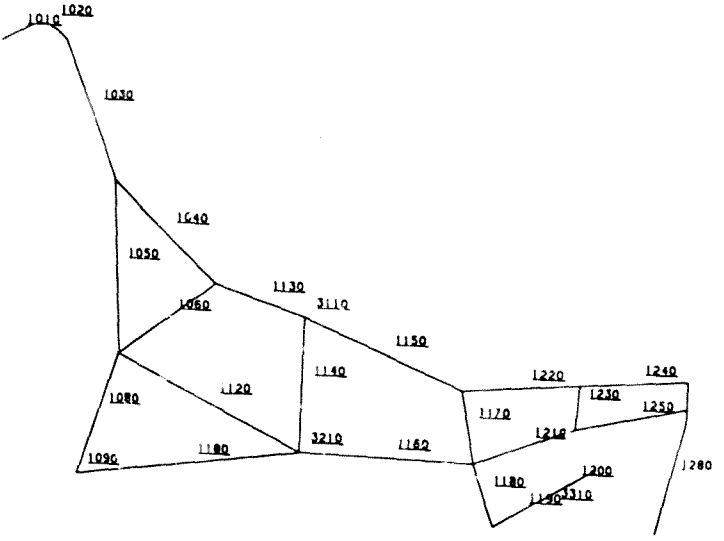

Figure 8.2F) Element Numbering of the Mobility Aid

The strength of the frame of the mobility aid was analysed by the finite element method. The ABAQUS program, version 4.6, was used to determine forces and moments in various parts of the structure. Usually such a program can be used to determine maximum stresses as well. However, the relevant facility in ABAQUS was faulty and a separate programme was developed by the writer to calculate the stresses from the forces and moments. This program, written in PASCAL, is shown in Appendix G.

The input file and excerpts from the output file for the ABAQUS program are shown in Appendix F.

8.2.1 The Finite Element Mesh

The prototype was analysed using 3 noded beam elements for the steel tubing and 8 noded elements for the wooden seating surface and footrest. Three noded beam elements instead of two noded beam elements were used because distributed loads were considered.

An attempt was made to reproduce exactly the geometry of the frame. As a result, some connections (between side-frame, cross members and wooden boards), required the use of constraint equations to specify the spatial relationship of adjacent nodes which are tied together.

Four digit numbers were used to identify nodes and elements and the first digit was used to differentiate between parts of the frame. '1' referred to first side frame,'2' to the second side frame,'3' to the cross-members,'4' to the seat,'5' the footrest and '6' to the wheel elements. The node and element numbering of one side-frame are shown in Figure 8.2.

The wheels were modelled as very stiff members ending at a point in contact with the ground, where boundary conditions could be specified. These wheel members are not shown in Figure 8.2 but appear in Figure 8.3.

8.2.2 Boundary and Loading Conditions

The same boundary conditions were used for all sets of loading conditions. All boundary conditions (Figure 8.3) were applied at contact points with the ground. The castors or front wheels do not support transverse or in-line loads and therefore only vertical boundary conditions could be applied. Only one castor was used, because it was expected that one castor would sometimes not be in contact with the ground. The other boundary conditions were then applied to the rear wheels as shown in Figure 8.3, resulting in a total of six independent translational constraints.

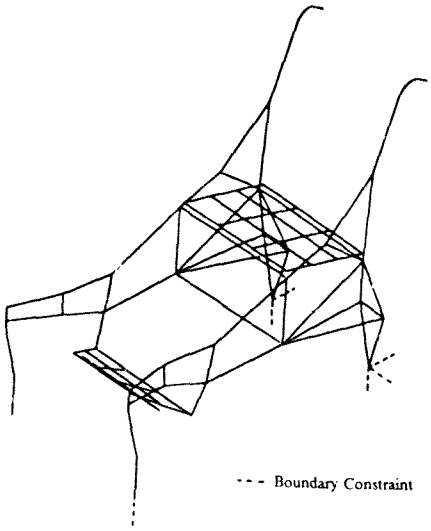

Figure 8.3 Boundary Conditions

Three sets of loading condition were used. All were based on a person of weight 900N.The loading conditions were as follows:

1. Distributed loads to both seat cross-members and concentrated loads to the backrest were applied to simulate the normal, seated position of the paraplegic.
2. To model forward transfer of the paraplegic out of the prototype, his total weight was distributed uniformly on the upper seat cross-member.
3. To model the worst condition of sideways transfer of the paraplegic, his weight was concentrated on node 1190 (corner of the seat).

8.2.3 Analysis

The von Mises stresses (Appendix C) at the nodes were calculated with the PASCAL program, which used values of forces and moments for the beams from ABAQUS. The calculations were simplified by omitting direct shear stresses. Most members were slender making these direct shear stresses relatively

negligible. A few stubby members, near the front of the side frames, where direct shear stresses could be more important were found to have low stresses.

High stresses were found in the footrest and its cross-member, because the frame was allowed to deflect freely in the region below the seating area (Figure 8.4). The maximum stress was halved when adding a member (Figure 8.5) in a triangular formation with the two seat cross-braces.
The highest stresses found were:

1. For the normal seating position: 32.4 MPa
2. For a distributed load on the front seat cross-member: 41.8 MPa
3. For the concentrated load: 48.5 MPa

The frame that was analysed was for an initial design where ergonomics had already been considered. This design was different to the prototype in that the fronts of the side frames were angled outwards(Figure 8.6). The analysis showed that the stresses in these regions were not very high. It was, therefore, considered unnecessary to repeat the analysis for the prototype.

8.3 Fatigue failure

Fatigue failure was considered because the structure was to be subjected to frequent stress changes in the rural environment. The types of change to be found were:

1. Climbing in and out of the mobility aid;
2. Stress reversals due to pedalling;
3. Stress changes because of negotiating rough ground.

Only the first and last of these types were considered for the fatigue analysis. The stress reversals due to pedalling were small compared to the whole load and would therefore not significantly influence the results.

The fatigue analysis was done using factors from Shigley(17). More accurate studies of fatigue on the mobility aid would require in depth testing of various

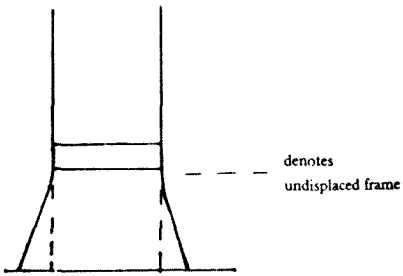

Figure 8.4 High displacement of the rear wheels with respect to one another thus inducing high strains (high stresses) on the footrest cross-member(not shown)

factors. This would take too long for the purpose of designing the prototype. A conservative approach (Appendix C) using factors was thus adopted. According to the modified Goodman diagram the mobility aid was designed for an infinite number of stress cycles. For a stress concentration factor of 3 the highest allowed stress was 41.7 MPa. The stress analysis showed that the highest static stresses for the three loading cases were:

1. 32.4 MPa for a normal seating position
2. 41.8 Mpa for the distributed load on one cross-member
3. 48.5 Mpa with a concentrated load on the corner of the seat.

For condition 1. the stress falls into the area of the modified Goodman diagram where infinite life is expected. Conditions 2. and 3. would not occur more than a few times a day, and the fatigue life, though not infinite, would still be considerable.

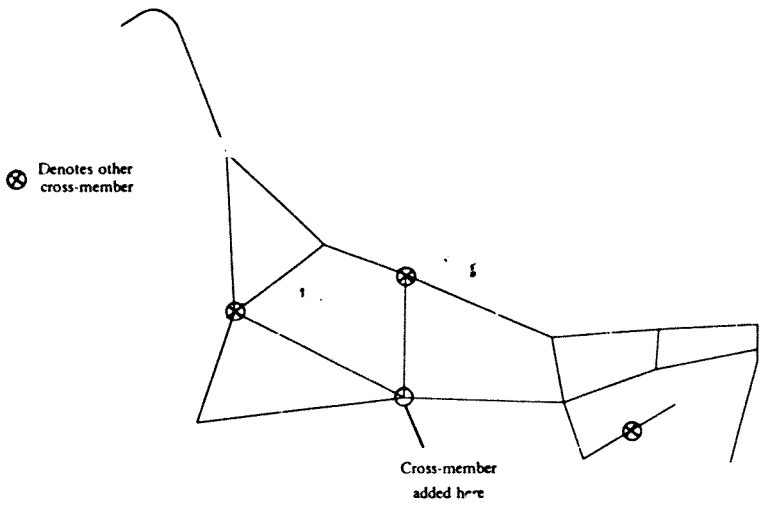

Figure 8.5 Position of member added for strengthening

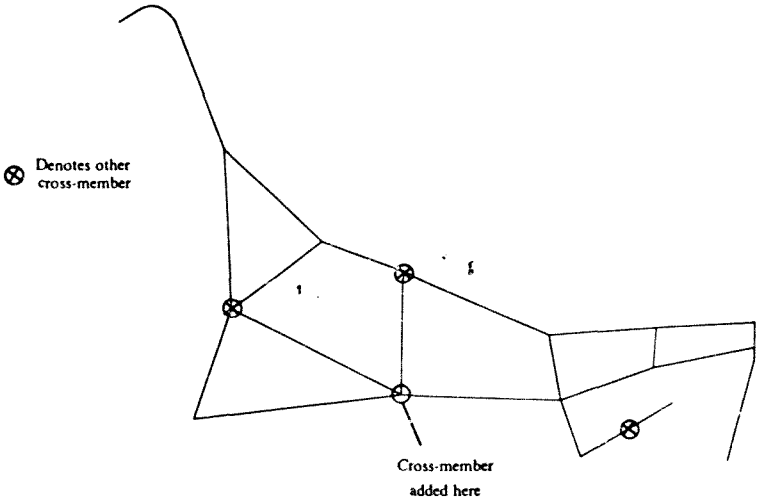

Figure 8.5 Position of member added for strengthening

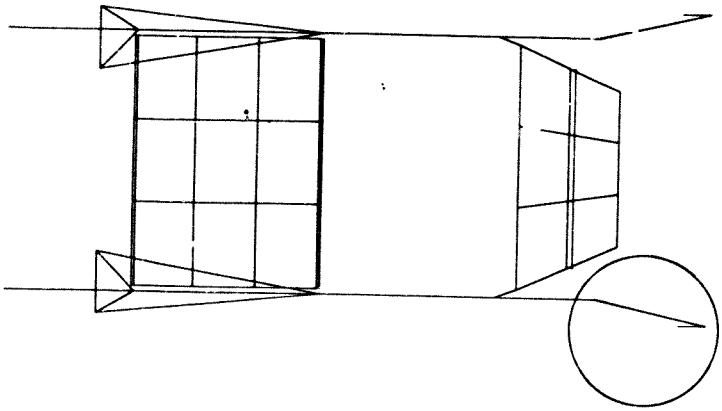

Figure 8.6 Top View of analysed frame depicting angling outward of the front section.

9.0 Manufacture of the Mobility Aid

A few questions have to be asked before beginning manufacture. Where is the prototype to be manufactured? What tools and skills are available? Is the manufacturing site central to the area of usage?

From the surveys it was found that manufacturing and repair facilities exist in Lesotho. However the demand for mobility aids in South Africa will be too small to support more than one manufacturing facility and Johannesburg, being more central, would be the most likely venue.

Different manufacturing techniques are available. Numerically controlled tools can be used to manufacture complex tube ends. An alternative would be to cast connection pieces, so that lengths of tubing can be fitted into them.

To avoid welding, as many bends as possible should be substituted for connections. Welding tends to weaken structures at welds and is more expensive than bending.

In Appendix E detailed costing puts the price of manufacture at about R700.

10.0 Testing and Modification of the Prototype

10.1 Terrain Testing

The prototype was tested by the writer for the first time at the workshop where it was built. The ground was of gravel, relatively rough and stony, with a small embankment of varying gradient; there was also a grassed area. The prototype was able to traverse the ground very well, small dips making hardly any difference. The embankment could be climbed when the gradient was not more than 1:4 and steeper gradients could be negotiated when going down. Difficulties were encountered with steering and castor flutter.

When travelling forwards the steering was stable, but the prototype was difficult to manoeuvre. On grass it was difficult to turn while moving forward. However in rural areas speed is not important and it is quite acceptable to stop before changing direction. Actually, having stopped, the driver will find it easier to turn by reversing one wheel.

Castor flutter was caused by castor excitation at natural frequency. The castor was therefore redesigned (Appendix C). A substantial increase in the lag, from 50 to 90mm, combined with a decrease in the mass of the fork, resulted in a reduction in the occurrence of flutter. It occurred at higher speeds than in the first tests.

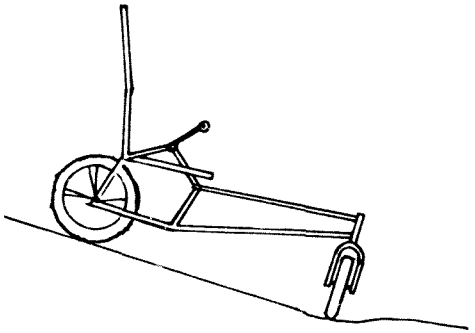

Figure 10.1 Castors caught in a position perpendicular to motion

Both front plastic wheels failed when the prototype was taken down an incline of approximately 1:2. Out of plane bending, for which the wheels are not designed, occurred when the castors were caught at right angles to the direction of travel (Figure 10.1). The modified castors were less likely to do this because the forks were lighter and had greater castor lag. A field study should show whether the plastic wheels are adequate. They have the advantage of being at least 5 times cheaper than other available wheels and are the only 12"(304mm) standard bicycle wheel that is available ex stock. If found to be inadequate, the wheel will have to be designed and built as a non-standard unit. This will significantly increase the price of the mobility aid.

10.2 Tests at Hillbrow and Wenela Hospitals

The prototype was taken to Hillbrow hospital to check the general characteristics of the chair. The staff found it to be a good alternative to present wheelchairs. However, on tests by paraplegics the following disadvantages were realised:

1. the upper instability of paraplegics

2. the low position of the pedal axle.

Upper instability of paraplegics had not been considered because this problem had not been encountered before. When propelling a conventional wheelchair a forward force is applied to the handrims causing a rearward reaction force which steadies the upper body against the backrest. In the prototype both reverse and forward forces are applied to the pedals, implying that forward reaction forces occur. These forward forces on the person make it necessary for him to balance. Paraplegics with higher lesions have no control over their abdominal or lower back muscles, which makes it difficult for them to balance their upper bodies. A strap around the chest will overcome this difficulty.

It was also found that the pedals are too low, causing further problems with upper body balance. During design it was feared that the pedals, if placed higher, would cause interference when a paraplegic transferred himself sideways. It was found during testing that the height of the pedal axle could be increased considerably without undue restriction to sideways access.

Further tests were done at Wenela Rehabilitation Centre. Here a conventional wheelchair and the prototype were both tested on a very steep small embankment. A paraplegic and the writer negotiated the obstacle in both vehicles. It was found that with the conventional wheelchair it was nearly impossible to negotiate the obstacle, particularly when the earth had been gouged by the wheels. In contrast the prototype passed over the embankment with hardly any extra effort.

A design fault was found when paraplegics transferred forwards out of the prototype. This resulted in higher stresses than anticipated in the castor forks which deformed plastically.

The bicycle bearings at the castors and at the pedals were found to be inadequate: They tended to become loose. Standard bearings would be a better alternative, although more expensive.

10.3 Modifications

The required modifications as indicated by from the above tests were introduced as follows (Drawing 2/4 in Appendix H):

1. The pedal height was increased.
2. The rear wheel attachment was modified according to the increased pedal height.
3. The pedal axle arrangement was modified to fit standard bearings.
4. The castor fork hub arrangement was modified to fit standard bearings.
5. The castor forks were modified by using a stronger section so as to fully support the weight of the user.

11.0 The evaluation of the prototype

11.1 General Evaluation

Usually wheelchairs are improved by modifying existing designs. The process used to design the prototype was different in that requirements, constraints and criteria, determined from analysis of rural surveys, were used as primary specifications. Attempts were made to depart from the basic configuration of the conventional wheelchair with two fixed wheels at the rear and two castors at the front. But this configuration was found to offer the best means of satisfying essential requirements.

It became clear, early on, that it would be impossible to satisfy all requirements and criteria. A compromise had to be made in order to start on the road of evolutionary development. Compared with the current standard issue by TEBA to paraplegics, the prototype described in the dissertation offers the following advantages:

Improved traction; reduced rolling resistance; increased stability; increased ground clearance and robustness. The combination of these advantages amounts to increased and safer mobility in rough, rural environment.

A continuous power cycle was used. This enables the prototype to climb gradients more effectively because traction is applied continually. A possible disadvantage when travelling on even terrain is that the magnitude of impact loads may be higher because the prototype is able to travel faster than a conventional wheelchair. This greater speed may also induce flutter of the castors, a problem which has yet to be solved.

The minimum wheel size was increased to 300mm compared to 200mm of a conventional wheelchair. This decreased rolling resistance by more than half. The rear wheels are smaller than those of a conventional wheelchair, but this did not increase rolling resistance significantly because the total rolling resistance is more dependent on the smallest wheel. The smaller wheel at the rear together with the

gears and pedal arms results in an overall gear ratio which is similar to that of a conventional wheelchair.

In the longitudinal direction, an increased wheelbase results in improved stability. Rearward stability is slightly better than that of a conventional wheelchair. Forward stability is much greater, which lessens the likelihood of toppling forwards when going down slopes.

The prototype is also higher off the ground than a conventional wheelchair, which enables it to traverse over rural terrain more effectively. The footrests do not impede travel, because they lie between the two wheels and are higher above the ground than for a conventional wheelchair.

The same steel tubing (22.7 x 1.6mm) was used for the frame of the prototype as for the Everest & Jennings wheelchair. The difference between the two frames is that there is more triangulation in the prototype. This leads to a more robust construction but at the expense of folding for the purpose of improving transportation.

The prototype can enter and be used in the home although its size and manoeuvrability reduce its suitability for indoor use. This was a conscious compromise in order to achieve better use outdoors.

The prototype was designed for easier maintenance.

The cost to manufacture the prototype appears to be comparable to that of an Everest & Jennings wheelchair.

11.2 Further Testing and Improvements

The prototype should be tested in the field in a manner similar to that carried out by the author on an Everest and Jennings wheelchair, as described in sections 4.4 and 4.5.

The author is confident, on the basis of limited tests carried out on the prototype, that the claims of improved outdoor mobility will be confirmed. However, only

thorough field tests will indicate whether the prototype is sufficiently robust. Any failures during such tests will indicate necessary improvements as well as provide a test for local repair facilities.

The prototype still needs to be folded in order to ease manhandling and transport. The use of cross-braces will make it less robust and consideration should be given instead to other means of folding eg. hinged sections which are secured by means of clamps or sliding bolts.

12.0 Further Work in Rural Mobility

This project's primary aim was to present paraplegics in rural areas with a long term mobility solution. Often this is not feasible because of cost. Many paraplegics in rural areas have no mobility aid whatsoever and have to move merely within the home environment. Some of these people have to crawl and drag their legs behind them. A trolley would, for example, help as a short term solution. General surveys are needed to establish how many disabled people there are, how they are presently coping and how their living conditions can be improved. Once this has been done, devices such as callipers and artificial limbs can be redesigned so that they are cost effective for rural areas.

More work is also necessary for paraplegics and quadriplegics in rural areas. New and innovative systems are required. Advances in technology during the next twenty years may make it possible to start thinking of motorised walking mobility aids for the physically disabled.

13.0 References

1. Ashby Phillip, **Ergonomics Handbook 1 - Human Factors Design Data - Body Size and Strength** , 1st ed. Pretoria: Design Institute, 1978.
2. Bonhard R.G, Low Cost Wheelchair, **Paraplegia** , Vol 21, 1983, pp94-98.
3. Cohen, Neville, Private Discussion.
4. Courtney, A.J, Wong, M.H, Anthropometry of the Hong Kong male and the design of bus driver cabs, **Applied Ergonomics** , Vol 16.4, pp259-266.
5. Davis P.R, and Stubbs D.A, Safe Levels of manual forces for young males (1), **Applied Ergonomics** , Vol 8, No 3, 1977, pp141-150.
6. Davis P.R, and Stubbs D.A, Safe Levels of manual forces for young males (2), **Applied Ergonomics** , Vol 8, No 4, 1977, pp2 -228.
7. Davis P.R, and Stubbs D.A, Safe Levels of manual forces for young males (3), **Applied Ergonomics** , Vol 9, No 1, 1978, pp33-37.
8. Diffrient Niels, Tilley Alvin R, Bardagly Joan C, **Humanscale 1/2/3** , 1st ed. USA: Henry Dreyfuss Associates, 1974.
9. Hogan Brian J, Hand-powered chain and sprocket drives propel wheelchair - Forward/backward lever strokes power chair, **Design News** , Vol 11, No 2, 1981.
10. Hotchkiss Ralf, **Independence through Mobility - A guide to the manufacture of the ATI - Hotchkiss wheelchair** , 1st ed, Washington: Appropriate Technology International, 1985.
11. Muybridge Eadweard, **Human and Animal Locomotion** , Vols II-III, New York: Dover Publications, 1979.
12. McCormick Ernest J., **Human Factors In Engineering and Design** , 5th ed. USA: McGraw Hill, 1982.
13. McGhee R.B and Iswandhi G.I, Adaptive Locomotion of a multi-legged robot over rough terrain, **IEEE Transactions on Systems, Man and Cybernetics** , Vol SMC-9, No 4, 1979, pp176-182.
14. McNaught Ann B., **Illustrated Physiology** , 3rd ed. Edinburgh, London and New York: Churchill Livingstone, 1975.
15. Raibert Marc, Machines that Walk, **Scientific American** , Vol 248, January 1983, pp32-41.

16. Simplicity was the key factor in the design of a tricycle for the disabled, **Engineering** , November 1981, pp875-876.
17. Shigley Joseph E,Mitchell, **Mechanical Engineering Design** , 4th ed, Japan: McGraw Hill Book Company, 1983.
18. South African National Building Regulations (Part S), **Facilities for disabled persons** , Pretoria: South African Department of Trade and Industry, 18 April 1986.
19. Tse Francis S, Morse Ivan E., Hinkle Rolland T., **Mechanical Vibrations - Theory and Applications** , 2nd ed, Boston: Allyn and Bacon, 1978.
20. Wheelchairs from Thailand, **Aids for Living (AHRTAG)** , Issue No.8, February 1987, pp2-3.
21. ...and from Guyana, **Aids for Living (AHRTAG)** , Issue No.8, February 1987, p3.
22. Pafupi Tricycle, **Aids for Living (AHRTAG)** , Issue No.2, April 1984, p5.
23. **Malindi Workshops** , P.O Malindi, Mangochi, Malawi.
24. ***ABAQUS Version 4.6*** ,Hibbitt, Karlsson and Sorenson,Inc.

14.0 Bibliography

1. Arkles Shelley, **Industrial Accidents: The Social Consequences** , Honours Dissertation, Johannesburg: Developmental Studies Group - University of the Witwatersrand, 1985.
2. Ashby Phillip, **Ergonomics Handbook 2 - Human Factors Design Data - Display and Controls** , 1st ed. Pretoria: Design Institute, 1979.
3. Babbie Earl R, **Survey Research Methods** ,1st ed. California: Wadsworth Publishing Company, 1973.
4. Bekker, M.G, ***Off the Road Locomotion - Research and development in* terramechanics** , 1st ed, USA: University of Michigan, 1960.
5. Buchan A.J, Eaglesham M.A, **Prototype Design of a Hand Powered Tricycle for Paraplegics in Rural Areas** , Final Year Mechanical Engineering Design, University of the Witwatersrand, Johannesburg, 1986.
6. Chacko V, Management of SCI in a General Hospital in Rural India, **Paraplegia** , Vol 24, 1986, pp330-335
7. Chapman R.F, **THE INSECTS, Structure and Function** , 2nd ed. Kent: Hodder and Stoughton Educational, 1986.
8. Chen C.F, SCI in Taipei, Taiwan, **Paraplegia** , Vol 23, 1985, pp364-370.
9. Denne W.A, The hammock effect in wheelchair cushion covers, **Paraplegia** , Vol 19, 1981, pp38-48.
10. Dieter George, **Engineering Design** , 1st ed. Tokyo: McGraw Hill, 1983.
11. Diffrient Niels, Tilley Alvin R, Bardagly Joan C, **Humanscale 4/5/6** , 1st ed. USA: Henry Dreyfuss Associates, 1981.
12. Diffrient Niels, Tilley Alvin R, Bardagly Joan C, **Humanscale 7/8/9** , 1st ed. USA: Henry Dreyfuss Associates, 1981.
13. Dodge, S, Jacobe, B, A three-dimensional aid for teaching wheelchair maintenance, **The American Journal of Occupational Therapy** ,Vol 40, No 4, April 1986, pp289-291.
14. Ellis J.R,**Vehicle Dynamics** , 1st ed, London: London Business Books Limited, 1969.
15. Farmer I.R, The Adult Orlau Swivel Walker,**Paraplegia** , Vol 20, 1982, pp248-254.

16. Ferguson M.W, Pressure sore prevention for the wheelchair-bound spinal injury patient, **Paraplegia** , Vol 18, 1980, pp42-51.
17. Fitzsimmons V.F.M, **A Field Guide to the snakes of Southern Africa** , 2nd ed. Great Britain: Collins, 1974
18. Francis Jones H.W, The Polystyrene vacuum wheelchair cushion, **Paraplegia** ,Vol 16, 1978, pp410-422.
19. Goldsmith Selwyn, **Designing for the Disabled** , 2nd ed. London: Royal Institute of British Architects, 1967.
20. Goswami A, Ganguli S, Bose K.S and Chatterjee B.B, Anthropometric Analysis of tricycle designs, **Applied Ergonomics** , Vol 17, No 1, 1986, pp25-29.
21. Harrison Ernest, Simple devices for the physically disabled, **Paraplegia** , Vol 22, 1984, pp182-193.
22. Henshaw J.T, Walking appliances for paraplegics and tetraplegics, **Paraplegia** , Vol 17, 1979, pp163-168.
23. Heyns Pam, Rural Disability, **The SA Journal of Occupational Therapy** , November 1986.
24. Hollinshead W.Henry, **Textbook of Anatomy** , 3rd ed. Hagerstown: Harper & Row Publishers, 1974.
25. Huchingson R.Dale, **New Horizons for Human Factors in Design** , 1st ed. United States of America: McGraw Hill Book Company, 1981.
26. Kaufman P.M, Mendelow A.D, **Wright's Fibre Systems of the brain and Spinal Cord** , 3rd ed. Johannesburg: Witwatersrand University Press, 1981.
27. Kendall F.P, **Muscles - Testing and Function** , 3rd ed. Baltimore: William & Wilkins, 1983.
28. Key A.G, Pressure redistribution in wheelchair cushion for paraplegics: Its application and evaluation, **Paraplegia** , Vol 16, 1978, pp403-412.
29. Lesser Werner, Wheelchair in Stress: Measurement of wheelchair characteristics, **RAM** , Vol 2, No 2, 1986, pp43-47.
30. Love Sydney F., **Planning and Creating Successful Engineered Designs** , 1st ed. New York: Van Nostrand Reinhold, 1980.
31. Minns R.J, Underseat Pressure Distribution in the sitting SCI patient, **Paraplegia** , Vol 22, 1984, pp297-304.

32. Mott R.L , **Machine Elements in Mechanical Design** , Columbus: Charles E Merrill Publishing Company, 1985.

33. McAdam R.,Stair Climbing and ability to work for paraplegics with complete lesions - a sixteen year follow-up, **Paraplegia** , Vol 18, 1980, pp197-203.

34. McMahon T.A, Using Body Size to understand the structural design of animals: Quadruped locomotion, **Journal Of Applied Physiology** , Vol 39, No 4, 1975, pp619-627.

35. Nag P.K, Panikar J.T, Malvankar M.G, Pradhan C.K and Chatterjee S.K, Performance evaluation of lower extremity disabled people with reference to hand-cranked tricycle propulsion, **Applied Ergonomics** , Vol 13, No 3, pp171-176.

36. Notvig H, Ambulation without wheelchairs for paraplegics with complete lesions, **Paraplegia** , Vol 16, 1978, pp142-146.

37. Nedhat M.A, Evaluation of Moto-Stand - A new vehicle for upright ambulation, in paraplegics, **Paraplegia** , Vol 23, 1985, pp253-258.

38. Pitts G., **Techniques in Engineering Design** ,1st ed. London: Butterworth & Co, 1973.

39. Popov Egor P, **Mechanics of Materials** , 2nd ed., New Jersey: Prentice Hall, 1978.

40. Sayers B.McA, Swanson S.A.V and Watson B.W, **Engineering in Medicine** ,1st ed. London: Oxford University Press, 1975.

41. Sharp Archibald, **Bicycles and Tricycles - An elementary treatise on their design and construction** , 1st ed, USA: The Massachusetts Institute of Technology, 1896 (reprint 1977).

42. Strachan R.K, An Evaluation of Pneumatic Orthoses in Thoracic Paraplegia, **Paraplegia** , Vol 23, 1985, pp295 - 305.

43. Taylor A.W, The effects of an arm ergonometer training programme on wheelchair subjects, **Paraplegia** , Vol 24, 1986, pp105-114.

44. Thiels Jorg, **Wheelchair Lift** ,Third Year Mechanical Engineering Design, Johannesburg: University of the Witwatersrand, Johannesburg, 1986.

45. Wallace A.D, Kuhnert B.F, **Design of Integrated Facilities for the Physically Handicapped** , Final Year Mechanical Engineering Design, Jonannesburg: University of the Witwatersrand, 1984.

46. Wilshere E.R, **Wheelchairs** , 4th ed. London: Manton Ltd, 1977.

47. Wilson Donald M, Insect Walking, **Annual Review of Entomology** , Vol 11, pp103-122.

48. Wilson Dona'd M, Stepping patterns in Tarantula Spiders, **Journal of Experimental Biology** , Vol 47, 1967, pp133-151.

49. Woodson W.E, **Human Factors Design Handbook** , 1st ed. New York: McGraw Hill Book Company, 1981.

Appendix A. Literature Survey

A.1 Alternative Rural Wheelchairs

Other rural wheelchairs are presented in two categories:

1. The conventional type chair
2. The chain or lever operated chairs

A.1.1 Conventional type Chairs

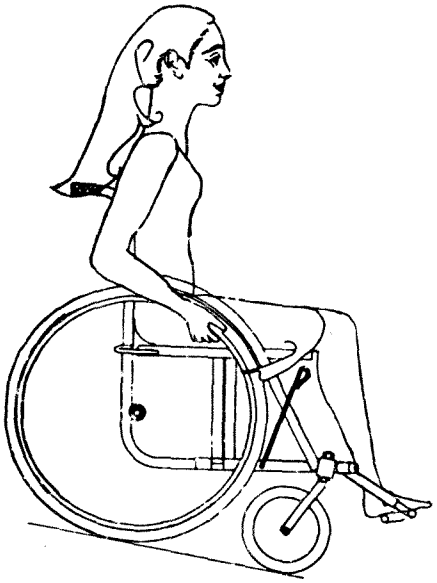

Figure A.1 The ATI Hotchkiss wheelchair

The ATI-Hotchkiss Chair (Figure A.1) was designed by Ralf Hotchkiss, an American paraplegic. It is primarily intended to be a wheelchair which can be afforded by people in third world countries. The wheelchair is manufactured in workshops in these countries for which a manual (10) was written.

The chair consists of mild steel round tubing welded together using gas welding. The wheels are standard bicycle rims and tyres, although the hubs have been specifically made for use in the wheelchair. The castors have a wooden support structure and a solid rubber tyre.

An ATI Hotchkiss wheelchair was tested by the writer at the Wenela hospital in Welkom. It is better balanced than present conventional wheelchairs and easier to tip. But the castors carry a substantial proportion of the weight, increasing rolling resistance. Also, the wheelbase is short and there is danger of toppling on slopes.

The Malawian Wheelchair (23), although classified here as a conventional chair, has only three wheels; One castor at the back and two standard 26" bicycle wheels at the front. Its advantages are that it can be built relatively easily in rural areas. It also uses standard bicycle wheels, which make it relatively cheap. Its disadvantages are that it cannot be tipped and balanced, because it is similar to the front driven conventional chair. This makes the chair less suitable than a conventional wheelchair for rural areas. The finer details of the chair are not known and therefore cannot be commented on (Although this chair is apparently well known, only a poor picture of it was available).

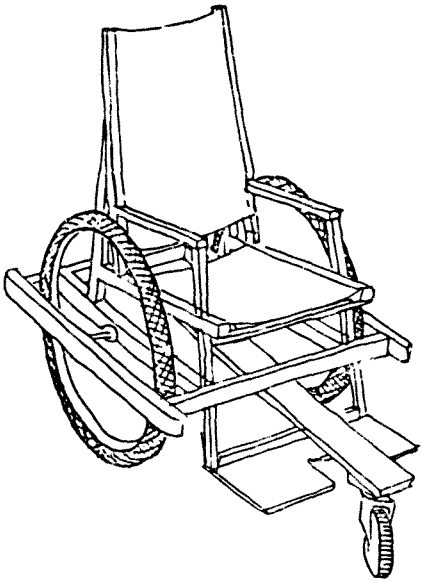

Figure A.2 The Thailand wooden wheelchair (20)

The Thailand Wooden Wheelchair(Figure A.2) is available in three and four wheeled models. It has standard bicycle wheels and similar castors to those found on conventional wheelchairs. From available pictures it appears that the wheelchair could be tilted and balanced to negotiate difficult terrain. As in the case of other conventional wheelchairs, it will probably be difficult to negotiate over rough ground.

A.1.2 Chain or Lever-operated Chairs

The Malawian Invalid Tricycle (23). The author was able to test-ride such a chair. It was found to be well suited to rural roads which do not have too many

gradients. It is a rigid chair like the above wheelchairs (except for the Hotchkiss wheelchair which is foldable).

The continuous power cycle makes it easier to negotiate relatively rough ground. Because the tricycle is front wheel driven, it has little traction on the drive wheel. Negotiating steep gradients is therefore not possible; a rear driven tricycle would be better for climbing gradients.

The Khamar-Persaud Tricycle from Guyana(21) is very similar in design to the Malawian tricycle and has similar features. The front wheel is very far forward, hence it will not be able to negotiate steep gradients. Possibly there are hardly any gradients in Guyana. This would explain why the designer says that his chair suits him better than a conventional wheelchair.

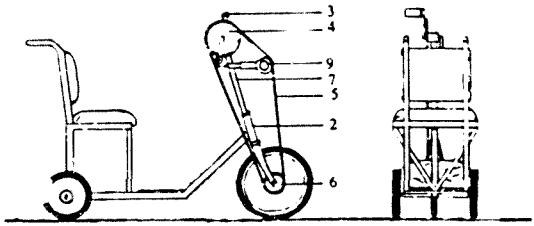

Part No	Description
1	Fork
2	Head tube
3	Crank
4	Chainwheel
5	Chain
6	Freewheel
7	Handlebar stem
8	Hand grip
9	Idler wheel
10	

Figure A.3 The Pafupi tricycle (22)

The Pafupi Tricycle (22) is a cha[illegible] in Malawi (Figure A.3). It was designed for narrow tracks and is itself narrow. It is propelled by a chain connected to the front wheels as found in the above two chairs. The centre of gravity of the person

is high for the narrow wheel base. This indicates a likely amount of instability in the chair. The Pafupi tricycle's traction properties are most probably better than those of the two above tricycles, because there is more weight on the front wheel.

The Indicycle(16) is operated by a lever, which propels the wheels through a ratchet/gear mechanism. The prototype has been able to climb kerbs of 75mm and pass through 675mm wide doorways. It is able to travel at 10km/h and has a mass of 26kg. The Indicycle has been found in only one reference and it is therefore not clear if it is being used at present. The chair was designed for children, but the author claims that it can be adapted for adults. The cost is not given.

A.2 Medical Background

A.2.1 Spinal Cord Injuries

All communication between the brain and limbs or trunk is via the spinal cord which consists of nerve cells and their connections. If the spinal cord is severed, there is a loss of communication resulting in paralysis of the affected limbs. Both partial and total paralysis are possible. Partial paralysis occurs if the spinal cord is not fully severed. It is therefore possible that only sensory or motor functions are disabled. Generally the higher the injury is located on the spine, the more severely disabled the person is. Quadriplegia results if the injury is in the first seven vertebrae (cervical region). Below this region paraplegia results.

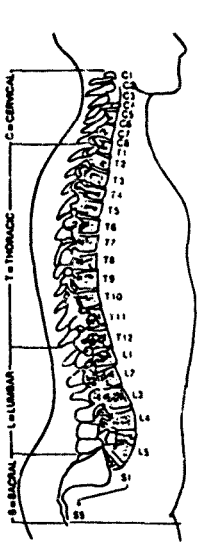

Figure A.4 The Spinal Cord

A.2.2 The Spinal Cord

The spinal cord (Figure A.4) consists of four regions:

1. The cervical
2. The thoracic
3. The lumbar
4. The sacral

The cervical region consists of seven vertebrae, the thoracic twelve, the lumbar five and the sacral five.

The cervical spine has eight nerve outlets, the first originating above the atlas, C1 (the letter designates the region and the number the particular vertebra counted from the top in that region), and the last nerve outlet (nerve C8) originating from below vertebra C7. Other nerve origins are counted as the nerve below that particular vertebra. The first three cervical nerves serve the neck and head muscles as well as respiratory functions. C4 to C8 serve the arms and hands. C8 serves mainly the fingers. The vertebrae in this region are small compared to the thoracic vertebrae.

The thoracic vertebrae gradually increase in size from T1 to T12. T1 is not significantly larger than C7. The nerves in the thoracic spine serve the trunk. Among other functions these nerves are also used to balance the upper body. Paraplegics with higher lesions therefore have difficulty in balancing.

The lumbar vertebrae are even greater than the thoracic vertebrae. The reason for the gradual increase in size of vertebrae is that the supported weight increases from the cervical to the lumbar regions. The lumbar nerves serve muscles in the hips and legs.

The sacral region, which is fused together and connected to the pelvis, has much smaller vertebrae than the lumbar region. Nerves in the sacral region feed certain leg muscles. More critically they serve the bladder and the bowel. Nearly all spinal injuries occur above this region; therefore most spinal cord injured are incontinent.

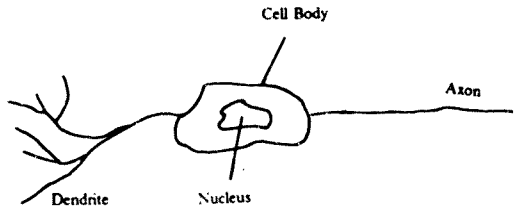

Figure A.5 The Nerve Cell

A.2.3 The nervous system

The nervous system consists of nerve cells (Figure A.5) and the connections between them. Nearly all nerve cells, which are the decision making elements, are found in the central nervous system comprised of spine and brain.

The simplest nervous system (Figure A.6) is the reflex reaction which can consist of only one nerve cell. Decisions in such a reflex arc are usually made in the spine and not in the brain.

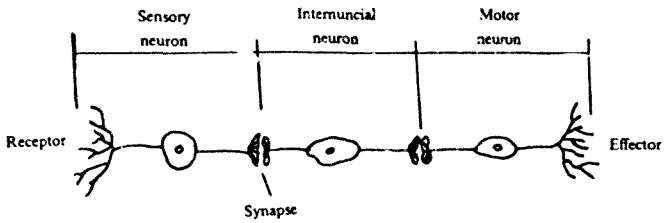

Figure A.6 The Nervous Reflex Arc

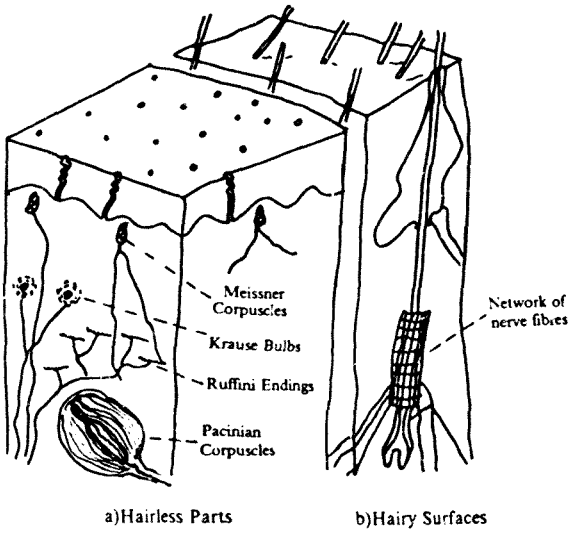

Figure A.7 Different types of Nerve Ending (McNaught(14))

A.2.4 Nerve Endings (Figure A.7)

Different nerve endings pick up temperature, touch and pressure. Under hairless skin surfaces sensitive Meissner corpuscles pick up touch and are located very close to the skin surface. Under hairy surfaces a network of nerve fibres around the hair shaft sense touch. The Krause bulbs and Ruffini endings, whose function is unknown, most probably pick up a combinations of signals. Temperature is most probably picked up by either both or one of these endings. Pacinian corpuscles lie deepest in the skin and measure pressure. One use of sensing pressure is to gauge how long a person has been sitting so as to prevent pressure sores, which occur if tissue is starved for too long of normal blood supply.

Similar types of nerve endings seem to be connected to the same group of nerve cells in the spine. This most probably explains why one or more functions are still active in partial paraplegics. Certain paraplegics may therefore only have sensation and others movement in a certain limb.

A.2.5 Motor Endings

The motor functions of the human being are controlled by the brain and the spine (reflex reactions). A signal is sent via the spine to the motor end plate (Figure A.8) where a chemical is released which stimulates the spine.

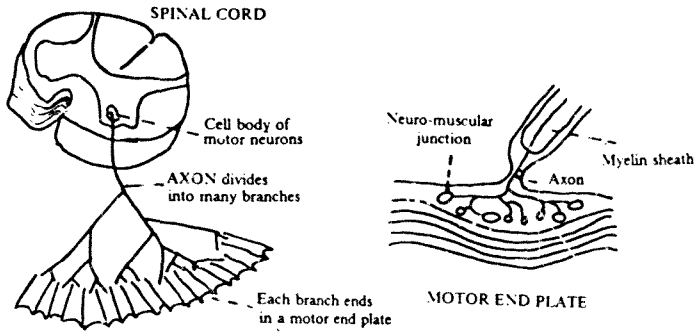

Figure A.8 Motor Neuron and End Plate (McNaught(14))

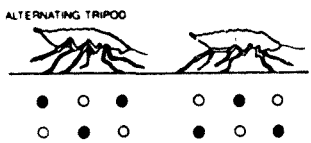

Figure A.9 The Tripod Gait (Raibert(15))

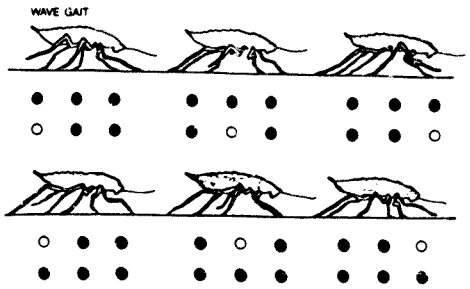

Figure A.10 The Wave Gait (Raibert(15))

A.3 Animal-Insect based walking mechanisms

A.3.1 Insects

Insects have the simplest type of walking mechanism because they do not need to balance themselves when walking. Balance is maintained by keeping the COG (centre of gravity) within the polygon of support. Insects use two types of gait. The tripod gait (Figure A.9) is most commonly used. This gait is the faster, because three legs are displaced at a time. The wave gait (Figure A.10) is a technique whereby on one side one leg is moved at a time from back to front. The legs on the opposite side are then moved. This is the more stable gait, but is also the slower. Often combinations or variations of these gaits are found.

A.3.2 Four legged animals

These animals need a balancing mechanism as well as a gait for walking. They are referred to as dynamic gaits. The horse, which has been studied closely

(Muybridge (11)), uses several gaits. The most common are the walk, the trot and the gallop. Four legged walking, although complex, is more versatile than six legged walking. Speed can be increased dramatically and traversing rough ground is greatly enhanced.

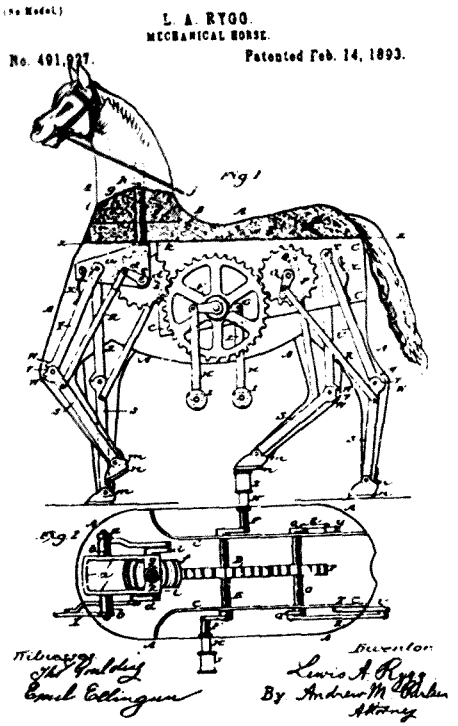

Figure A.11 Mechanical Horse by Lewis A Rygg (Raibert (15))

A.3.3 Man made legged *motion*

The most effective way of negotiating rugged ground is to use legs. This is demonstrated by humans and animals when negotiating mountainous or hilly terrain. Present wheeled and tracked vehicles are limited to certain types of terrain. In 1893 Lewis A Rygg (Raibert(15)) designed a mechanical horse (Figure A.11) operated by pedals. This horse was never built. If used it would not have been able to negotiate rugged terrain. Only flat and even surfaces could be attempted. Some type of suspension or computer controlled mechanism is required to surmount any variation in the surface.

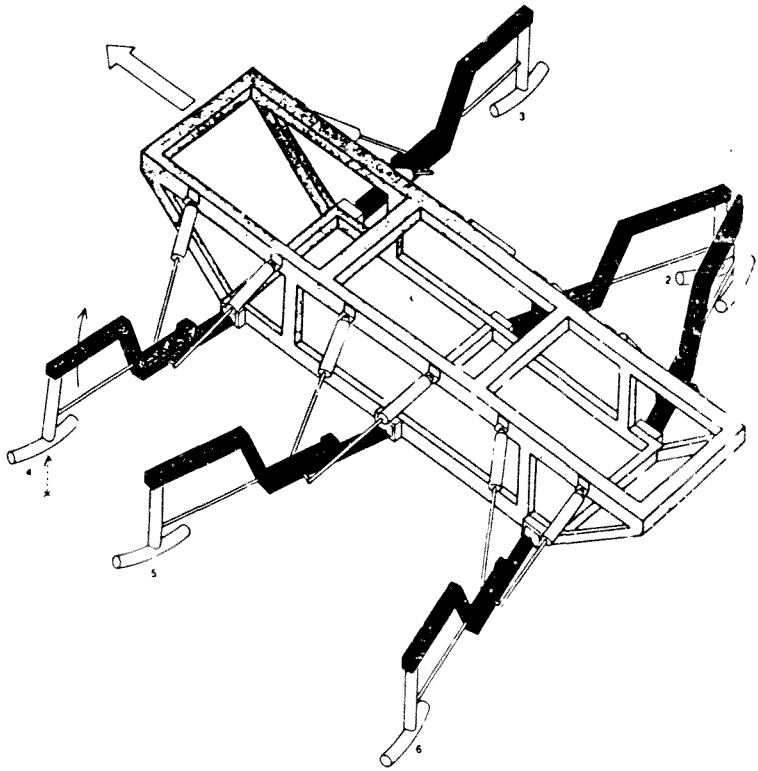

Figure A.12 Six Legged Machine (Raibert(15))

Vehicles with only suspension systems do not seem to have been attempted. Only when microprocessors were developed did work into this field start. Raibert(15) describes how they designed and built a six-legged machine (Figure A.12) and a

two dimensional one-legged hopper (Figure A.13). The six-legged walker is controlled by a built-in microcomputer which simulates insect motion. The legs are lifted by hydraulic actuators and then remoted (action of forward moving body leaving legs on ground behind) passively. A similar device was built by McGhee (13) to investigate locomotion over rough terrain. These machines are relatively simple to design and build because dynamic balance is not an important requirement at the present stage of their development.

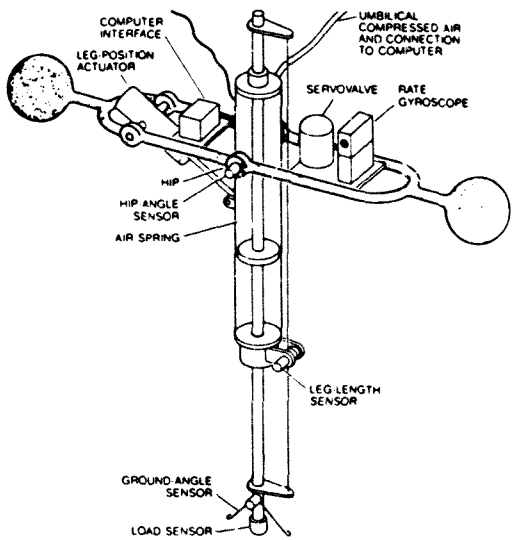

Figure A.13 One Legged 2-D Hopper (Raibert(15))

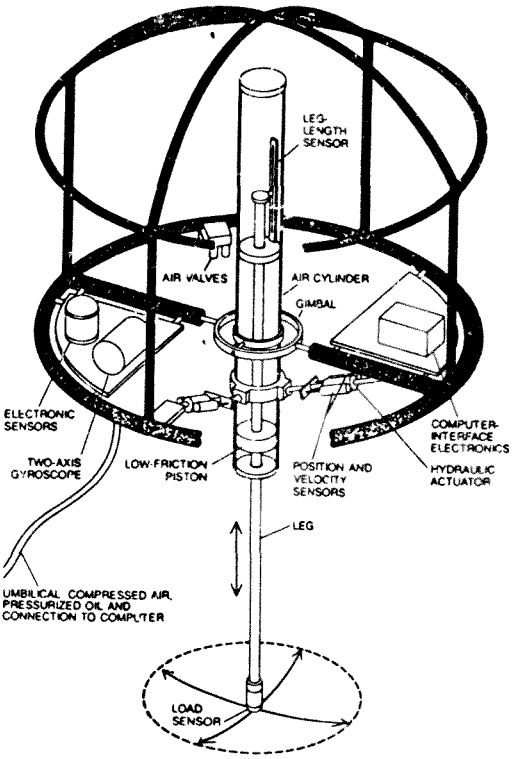

Figure A.14 One Legged 3-D Hopper (Raibert(15))

The two dimensional hopper built by Raibert(15) is a device which balances and hops. It therefore simulates the actions needed by humans to walk and balance. The device was successful. A three-dimensional walker was therefore planned (Figure A.14). The hoppers will make it feasible to build four- and two-legged

walking mechanisms, making a fast and effective way of travelling over rough ground possible.

A.4 Ergonomics

This field includes all human-machine interfaces. We encounter these daily in motor vehicles, toasters, chairs and many other items. We humans use many appliances. Every single item needs to be designed for us. Without consideration of ergonomics a design with a human interface may easily be a failure.

A.4.1 Anthropometrics

To design most items, a basic knowledge of human dimensions and variations of them is required. For this purpose anthropometric tables have been compiled to help the designer. Usually values are given for the 5 th, 50 th and 95 th percentile males and females. These values were chosen, because the variation in dimensions between these extremes is a nearly linear relationship. When using a larger bracket the relationship tends to deviate from the linear significantly beyond these limits. It is usually not economical to consider the extremes. Doorways are therefore high enough for most individuals, but do not cater for those over 2m tall.

In the case of the door, the smallest person's height was not considered as such people will always be able to fit. In the case of reach, small people need to be considered. Large people are not taken into account in this case.

A.4.2 Application of Force

This section of ergonomics looks at the maximum force a weak person is able to apply. These are used for applications where human energy is required to operate a part such as opening a valve or riding a bicycle. Different positions of the limbs affect greatly the maximum force of which a person is capable. At the fully outstretched position, an arm is able to pick up far less weight than when the arm

is close to the person. There are usually many variables to consider when using these figures; they have to be applied with caution. It is also difficult to establish what the maximum force should be, because this varies considerably from person to person. Some machines are designed for men only, whereas others need to be designed for both men and women.

Appendix B. Building of manikins

Manikins are used in ergonomic design as a tool to fit the human frame to the machine interface. Courtney and Wong(4) used manikins to determine the dimensions of bus cabs for use in Hong Kong. Previously its buses had been designed and imported from Europe and the USA. The result was that their drivers, being of very different dimensions from their overseas counterparts, were subjected to extremely uncomfortable postures. With life size manikins it was possible to design a cab suitable for a wide range of Hong Kong drivers.

For the design of the mobility aid the dimensions of the black population in South Africa were required. Only limited information is available on black males, while no anthropometrical studies have been done on black females in South Africa. The Ergonomics Handbook 1 (1) and a survey of black mine workers were used as sources. Dimensions obtained from the survey in Lesotho were incorporated as well. However, the information for the building of manikins was incomplete and US dimensions (8) were used as an additional reference. Multiplication factors were derived by comparing dimensions on the same parts of the body of the US male and the black SA male. Link measurements (lengths between respective hinge points of the body) were then calculated using the US measurements and the multiplication factor.

Using this method, 2.5th, 50th and 97.5th percentile manikins were built. Three dimensional manikins were not considered mainly because of their complexity. Flat two-dimensional manikins were better for draughting purposes because they can be laid directly onto drawing paper. A full scale model was not necessary because the wheelchair had not yet been built. 1:5 models were used to correspond to the scale used on the drawings.

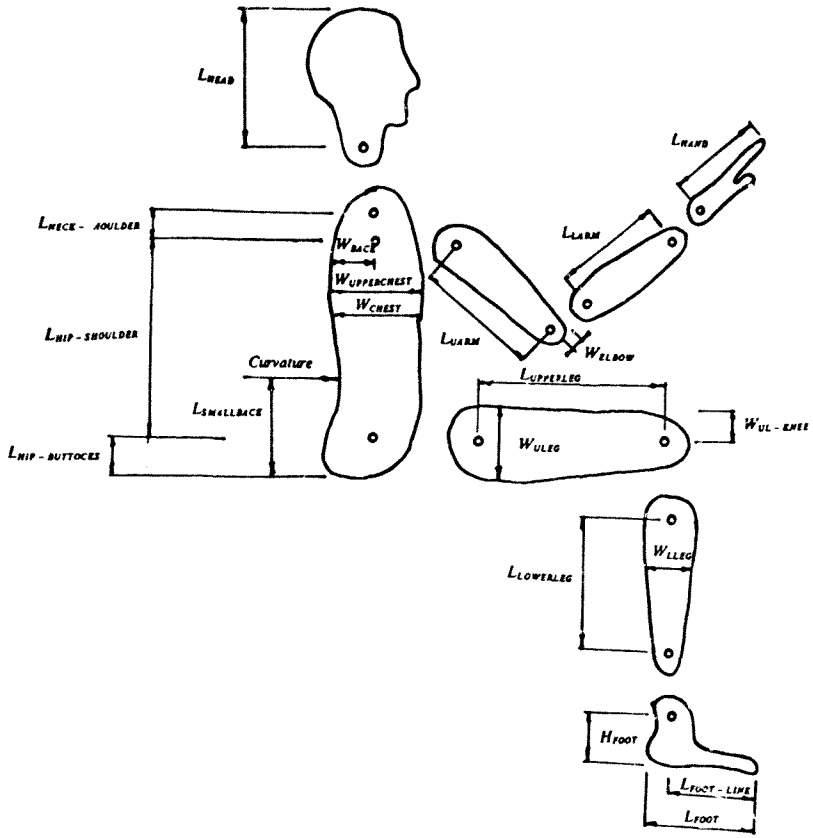

Figure B.1 Dimensions used to build manikins (See Table B.1)

Measurement	5th percentile	50th percentile	97.5th percentile
L_{HEAD}	256	273	292
$L_{HIP-SHOULDER}$	388	426	463
$L_{NECK-SHOULDER}$	79	85	92
$L_{HIP-BUTTOCKS}$	65	80	92
Curvature	254	254	254
$L_{SMALLBACK}$	210	225	241
W_{CHEST}	151	188	238
$W_{UPPERCHEST}$	180	214	251
W_{BACK}	89	106	128
$L_{UPPERLEG}$	357	405	454
W_{ULEG}	133	162	178
$W_{UL-KNEE}$	44	49	55
$L_{LOWERLEG}$	350	400	453
W_{LLEG}	95	114	133
L_{FOOT}	256	277	303
H_{FOOT}	99	108	114
$L_{FOOT-LINK}$	187	202	220
L_{UARM}	250	282	315
W_{ELBOW}	24	33	40
L_{LARM}	222	254	281
L_{HAND}	171	189	207

Table B.1 Dimensions used for the manikins

Appendix C. Calculations

C.1 Gear ratios



Figure C.1 Force F required to move a vehicle up a slope

A gear ratio making it possible for the mobility aid to climb a hill of 1:5 was needed. For the static case a force F is required to climb such a gradient:

$$\sum F_x = 0$$

$$F = mg \sin \theta$$

For the 5th percentile person a combined weight of 90kg was taken:

$$\therefore F = 90g \sin 11.31^\circ = 173.2N \text{ for both sides}$$

For one side it will be 86.6N. The maximum force that a 5th percentile person can apply is 100N per arm. The largest sprocket found to fit the rear wheel had 18 teeth. A 16"(405mm) wheel had been selected for the rear and the largest possible crank radius is 140mm. The number of teeth for the front sprocket was then found using:

$$F = \frac{T_w}{T_p} \frac{r_p}{r_w} F_p$$

where:

T_w: No. of teeth on wheel sprocket
T_p: No. of teeth on pedal sprocket
r_p: radius of pedal crank
r_w: radius of wheel
F_p: force applied to pedal

$$\therefore T_p = \frac{F_p}{F} \frac{r_p}{r_w} T_w$$

$$= \frac{100}{86.6} \frac{140}{200} 18 = 14.55 \text{ teeth}$$

A sprocket with 14 teeth was therefore selected.

C.2 *Centres of Gravity*

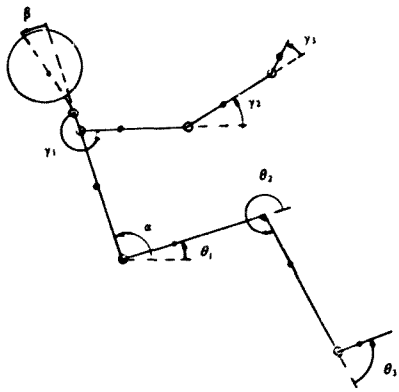

Figure C.2 Positions of CGs for all Body Parts

The centres of gravity for 2.5th, 50th and 97.5th percentile people and that of the mobility aid were required to calculate the stability of the mobility aid. The people built on statistics were then divided into the various body parts as shown in Figure C.2. the centres of gravity of each limb were found using the following expressions:

$$(x_{CG})_{ul} = L_{ul}(r_{CG})_{ul} \cos\ \theta_1$$

$$(x_{CG})_{ll} = L_{ul} \cos\ \theta_1 + L_{ll}(r_{CG})_{ll} \cos\ (\theta_1 + \theta_2)$$

$$(x_{CG})_f = L_{ul} \cos\ \theta_1 + L_{ll} \cos\ (\theta_1 + \theta_2) + L_f(r_{CG})_f \cos\ (\theta_1 + \theta_2 + \theta_3)$$

$$(x_{CG})_t = L_t(r_{CG})_t \cos\ \alpha$$

$$(x_{CG})_h = L_t \cos\ \alpha + L_h(r_{CG})_t \cos(\alpha + \beta)$$

$$(x_{CG})_{ua} = L_{ta} \cos\ \alpha + L_{ua}(r_{CG})_{ua} \cos\ (\alpha + \gamma_1)$$

$$(x_{CG})_{la} = L_{ta} \cos\ \alpha + L_{ua} \cos\ (\alpha + \gamma_1) + L_{la}(r_{CG})_{la} \cos\ (\alpha + \gamma_1 + \gamma_2)$$

$$(x_{CG})_{hand} = L_{ta} \cos\ \alpha + L_{ua} \cos\ (\alpha + \gamma_1) + L_{la} \cos\ (\alpha + \gamma_1 + \gamma_2)$$

$$+ L_{hand}(r_{CG})_{hand} \cos\ (\alpha + \gamma_1 + \gamma_2 + \gamma_3)$$

$$(y_{CG})_{ul} = L_{ul}(r_{CG})_{ul} \sin\ \theta_1$$

$$(y_{CG})_{ll} = L_{ul} \sin\ \theta_1 + L_{ll}(r_{CG})_{ll} \sin\ (\theta_1 + \theta_2)$$

$$(y_{CG})_f = L_{ul} \sin\ \theta_1 + L_{ll} \sin\ (\theta_1 + \theta_2) + L_f(r_{CG})_f \sin\ (\theta_1 + \theta_2 + \theta_3)$$

$$(y_{CG})_t = L_t(r_{CG})_t \sin\ \alpha$$

$$(y_{CG})_h = L_t \sin\ \alpha + L_h(r_{CG})_t \sin(\alpha + \beta)$$

$$(y_{CG})_{ua} = L_{ta} \sin\ \alpha + L_{ua}(r_{CG})_{ua} \sin\ (\alpha + \gamma_1)$$

$$(y_{CG})_{la} = L_{ta} \sin\ \alpha + L_{ua} \sin\ (\alpha + \gamma_1) + L_{la}(r_{CG})_{la} \sin\ (\alpha + \gamma_1 + \gamma_2)$$

$$(y_{CG})_{hand} = L_{ta} \sin\ \alpha + L_{ua} \sin\ (\alpha + \gamma_1) + L_{la} \sin\ (\alpha + \gamma_1 + \gamma_2)$$

$$+ L_{hand}(r_{CG})_{hand} \sin\ (\alpha + \gamma_1 + \gamma_2 + \gamma_3)$$

where

CG : Centre of gravity
ul : upper leg
ll : lower leg
f: foot
t: trunk
ta: refers the distance between hip and shoulder joint
h: head and neck
ua: upper arm
la: lower arm

r_{CG}: ratio of distance between the link closest to the hip along the body to the CG over the length of the body part

L: length of body part

Calculation of the centre of gravity of a mobility aid

Member	Length	Weight/m	Weight	Quantity	x	y	xWN	yWN	Total Weight
201a	77	0.79	0.06	2	-138	1008	-16.75	122.34	0.12
201b	63	0.79	0.05	2	-75	1015	-7.45	100.79	0.10
201c	285	0.79	0.22	2	0	860	0.00	386.33	0.45
201d	290	0.79	0.23	2	55	583	25.14	266.49	0.46
202	230	0.79	0.18	2	145	645	52.57	233.83	0.36
203	195	0.79	0.15	2	150	497	46.10	152.76	0.31
204	355	0.79	0.28	2	227	362	127.02	202.56	0.56
205	320	0.79	0.25	2	398	495	200.75	249.67	0.50
206	185	0.79	0.15	2	395	392	115.18	114.31	0.29
207	250	0.79	0.20	2	520	290	204.91	114.27	0.39
208	155	0.79	0.12	2	600	360	146.59	87.95	0.24
209	525	0.79	0.41	2	820	430	678.56	355.83	0.83
210	430	0.79	0.34	2	865	330	586.27	223.66	0.68
211	90	0.79	0.07	2	825	384	117.03	54.47	0.14
212	105	1.15	0.12	2	1085	402	262.87	97.39	0.24
213	540	0.89	0.48	1	395	290	190.67	139.99	0.48
214	464	0.89	0.41	1	130	420	53.92	174.21	0.41
215	455	0.89	0.41	1	395	495	160.66	201.33	0.41
216	75	0.89	0.07	2	620	330	83.13	44.25	0.13
217	360	0.42	0.15	2	208	873	62.99	264.37	0.30
218	360	0.42	0.15	2	208	873	62.99	264.37	0.30
219	450	0.42	0.19	2	30	360	11.36	136.27	0.38
221	71	1.14	0.08	1	135	440	10.93	35.61	0.08
224	430	6.88	2.96	1	280	480	828.35	1420.03	2.96
225	220	4.96	1.09	1	820	216	894.78	235.70	1.09
302	370	0.89	0.33	1	850	185	281.14	61.19	0.33
303	205	0.76	0.16	2	838	205	261.19	63.90	0.31
304	270	0.76	0.21	2	725	260	297.62	106.73	0.41
306	120	0.76	0.09	2	1085	407	197.96	74.26	0.18
307	84	1.52	0.13	2	1085	350	277.07	89.38	0.26
308	210	1.52	0.32	1	1060	240	338.35	76.61	0.32
chain	1165	0.33	0.38	2	370	960	280.32	727.32	0.76
pedalarnt			0.92	2	240	560	443.04	1033.76	1.85
rearwhl			1.50	2	0	200	0.00	600.00	3.00
frontwhl			1.00	2	1043	155	2086.00	310.00	2.00

Total Weight = 21.0kg

x-coordinate of cg = 447.4

y-coordinate of cg = 391.5

Table C.1 The CG of the mobility aid

Using the above expressions the centres of gravity were calculated in spreadsheets. Two cases were considered: A normal seated position, with the user reclining against the backrest ($\alpha = 103°$), and a forward position, with the user inclined at 30° to the seat ($\alpha = 45°$). The results are shown in Table C.2

	Normal body position		Forward body position	
	x	y	x	y
Percentile				
2.5th	206	761	374	712
50th	235	793	415	741
97.5th	255	820	446	765

Table C.2 Centres of gravity for statistical people

The centre of gravity of the mobility aid was calculated according to the part numbers in the drawings in Appendix G. Table C.1 shows how the centre of gravity was calculated. The results of Table C.1 and the centres of gravity of the people were then combined to obtain the results in Table C.3.

	normal body position		forward body position	
	x	y	x	y
Percentile				
2.5th	270	677	398	641
50th	286	712	429	671
97.5th	297	740	452	695

Table C.3 The combined CGs of mobility aid and people (all positions are given relative to the point of contact of the rear wheel with the ground)

C.3 Stability

C.3.1 Static Stability

Static stability was calculated for toppling backwards over the rear wheels' contact point with the ground and for toppling sideways. Toppling forward over the castors was not considered because the CG was too far from the castors. For toppling backwards both the normal and forward positions were considered and angles of toppling were calculated (Table C.4). The inclination of the body in the longitudinal direction does not affect sideways stability and only one value of sideways topple angle was calculated (Table C.5)

	normal body position	forward body position
Percentile		
2.5th	21.7°	31.6°
50th	21.9°	32.3°
97.5th	21.9°	32.8°

Table C.4 Angles of topple for toppling over the rear wheels

Percentile	
2.5th	18.4°
50th	17.5°
97.5th	16.9°

Table C.5 Angles of topple for toppling sideways

C.3.2 Dynamic Stability

For the dynamic case of tipping over backwards, consider a vehicle going up an incline of angle θ. Just before it starts tipping, the angular velocity ω and the reaction N_2 will be equal to zero. In the limiting condition the angular

acceleration α is also zero. The forces and acceleration are then as shown in Figure C.3.

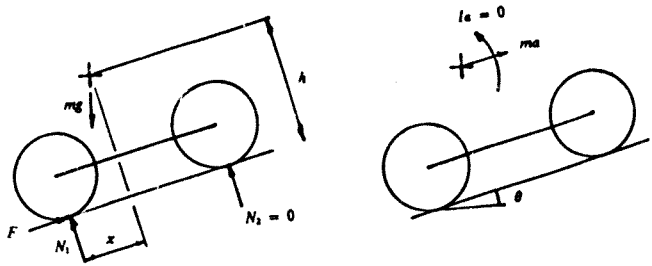

Figure C.3 Forces and acceleration of vehicle about to tip backwards while moving up an incline

Applying Newton's second law

$$\Sigma F_x = ma \quad \therefore F - mg \sin \theta = ma$$

$$\Sigma F_y = 0 \quad \therefore N_1 = mg \cos \theta$$

$$\Sigma M_G = 0 \quad \therefore Fh - N_1 x = 0$$

By substitution we get

$$F = \frac{mgx \cos \theta}{h}$$

This is the traction applied at the rear wheels which is required to accelerate the vehicle and to overcome gravity. The force needed to overcome gravity is $mg \sin \theta$. The force needed to accelerate the vehicle is:

$$F - mg\sin\theta = mg\left(\frac{x}{h}\cos\theta - \sin\theta\right) = ma$$

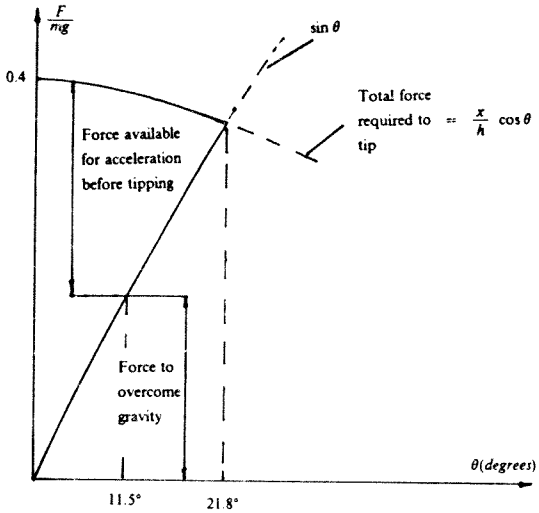

Figure C.4 Plot of dimensionless forces vs incline angle

This relationship is illustrated non-dimensionally in Figure C.4 for the case of the prototype, with the user in the normal seated position, against the backrest when the ratio $\frac{x}{h}$ is 0.4.

The plot shows clearly two extreme cases

1. On a level road ($\theta = 0$) all the traction is available for acceleration and, for a man weighing 900N, this traction must not exceed 360N if backwards tipping is not to occur.

2. On an incline of 21.8 °, a tractive force 334N is required to overcome gravity and any attempt to accelerate will result in backward tipping.

The plot also shows the case of an incline of 1:5 ($\theta = 11.5°$) when 180N is needed to overcome gravity and a maximum of 173N are available for acceleration without tipping.

Obviously, with the user leaning forward, the ratio $\frac{x}{h}$ is increased and the maximum traction which can be applied to accelerate is increased. Ground friction, if insufficient will cause sliding before tipping occurs.

C.4 Stress Analysis

The force analysis on the frame was done using the Finite Element Method. Forces and Moments in the principal directions were found and tabulated. A program was written to find the maximum stress acting on a section. Direct shear stress was neglected, because of the complexity of adding it in the generalised case. It would not affect most members because they are slender. If high stresses occur in shorter members, they would have to be further investigated. The stresses in the program were for a beam in space. The moments and forces at nodes were calculated by ABAQUS (24).

The axial stress σ_A was taken as:

$$\sigma_A = \frac{F_A}{A}$$

where:

F_A : Axial Force
A : Cross-sectional Area

The bending stress σ_{BM} was taken as:

$$\sigma_{BM} = \frac{\sqrt{M_x^2 + M_y^2}\, y'}{I}$$

and the maximum normal stress σ_N

$$\sigma_N = |\sigma_A| + |\sigma_{BM}|$$

Torsional Stress τ

$$\tau = \frac{Tr}{J}$$

The principal stresses were found using Mohr's Circle :

$$\sigma_1 = \frac{\sigma_N}{2} + \sqrt{\left(\frac{\sigma_N}{2}\right)^2 + \tau^2}$$

$$\sigma_2 = \frac{\sigma_N}{2} - \sqrt{\left(\frac{\sigma_N}{2}\right)^2 + \tau^2}$$

The von Mises Max Stress at a node was then found:

$$\sigma_{von\ Mises} = (\sigma_1^2 - \sigma_1\sigma_2 + \sigma_2^2)^{\frac{1}{2}}$$

The maximum stresses (in MPa) at selected elements were:

Element	Normal	Torsional	von Mises
1140	20.6	2.1	21.4
1070	28.7	1.6	29.0
1080	26.2	1.4	26.5
2120	21.3	0.4	21.4
2130	25.3	-0.7	26.0
2130	22.1	-0.7	22.9
2140	28.5	-1.0	28.9
2140	22.5	-1.0	23.0
2070	23.9	-1.2	24.1
2080	22.7	-0.7	22.8
3010	11.1	0.1	23.3
3110	22.6	-0.2	32.7
3110	31.1	0.6	32.0
3120	25.2	1.3	25.7
3120	24.8	-1.1	24.9
3120	24.4	-3.4	25.9
3130	27.5	-2.7	28.7
3130	24.9	-2.2	31.0

C.5 *Fatigue Analysis*

The fatigue analysis was done according to Shigley (17). Using the modified Goodman diagram the frame was designed for the region of infinite life.

The endurance limit S_e' for a rotating beam specimen was found by taking it as 0.35 of the ultimate tensile strength S_{ut} : $S_e' = 0.35 S_{ut} = 0.35 \times 400 = 140\ MPa$

The endurance limit for the frame S_e had to then be modified using various factors: $S_e = k_a k_b k_c k_d k_e k_f S_e'$

k_a : surface factor

k_b : size factor

k_c : reliability factor

k_d : temperature factor

k_e : modifying factor for stress concentration

k_f : miscellaneous effects factor

k_a

for a cold drawn material

$k_a = 0.83$

k_b

$k_b = 1.189d^{-0.097} \quad for\ d < 8mm \leq 250mm$

for $d = 22.23$

$k_b = 0.88$

k_c

Choose a reliability of 0.99

$\therefore k_c = 0.814$

k_d

$k_d = 1$ because the temperature $\leq 450^\circ C$

k_e

estimate $K_t = 3$ and take Notch sensitivity q to be equal to unity :

$$q = \frac{K_f - 1}{K_t - 1}$$

$\therefore K_f = K_t$

K_f : fatigue stress-concentration factor

K_t : geometric stress-concentration factor

$\therefore k_e = \frac{1}{K_f} = 0.33$

k_f

The miscellaneous effects factor was estimated to be 0.8

$\therefore S_e = k_a k_b k_c k_d k_e k_f S_e' = 0.83 \times 0\,88 \times 0.814 \times 1 \times 0.33 \times 0.8 \times 140 = 22\ MPa$

The stress is estimated to vary between 0 and maximum stress

$$\therefore \sigma_a = \sigma_m \qquad (1)$$

σ_a : amplitude of varying stress

σ_m : mean stress

The frame was designed so that its maximum stress fell within the area in the modified Goodman diagram where theoretically infinite life was expected. From the Goodman diagram the following equation was derived for the intersection of the two lines.

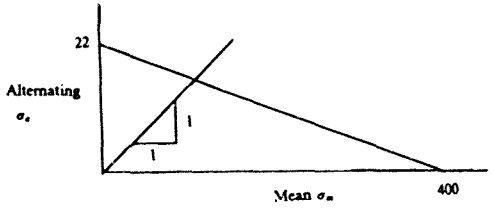

Figure C.5 Analysis using the modified Goodman diagram

$$\sigma_a = -\frac{22}{400}\sigma_m + 22 \qquad (2)$$

Substitute Equation 1 into equation 2 :

$$\left(1 + \frac{22}{400}\right)\sigma_a = 22$$

$$\therefore \sigma_a = 20.85\ MPa$$

$$\therefore \sigma_m = 20.85\ MPa$$

$$\sigma_{max} = \sigma_m + \sigma_a = 41.7\ MPa$$

The maximum stress in the frame for normal use with a seated user was found to be 32 MPa, which falls within the designed range.

C.6 *Natural Frequency Analysis of the Castors*

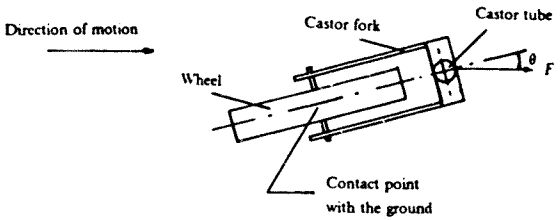

Figure C.6 Analysing the Natural Frequency of the Castor Fork

The symbols in following expressions are defined as: U: Potential Energy

T: Kinetic Energy

L: Castor Lag

F: force applied by the frame on the castors

θ: angle castor makes with the direction of motion

J: Mass moment of inertia of the castors

ω: Natural angular frequency

f: Natural frequency

The natural frequency was analysed using the energy method (Tse(19)).

$$\frac{\partial U}{\partial t} + \frac{\partial T}{\partial t} = 0$$

(U + T = constant)

From Figure C.6

$$U = FL(1 - \cos\ \theta)$$

$$\frac{\partial U}{\partial t} = FL \sin\ \theta\ \frac{\partial \theta}{\partial t}$$

for small θ $\sin\theta \approx \theta$

$$\therefore \frac{\partial U}{\partial t} = FL\theta \frac{\partial \theta}{\partial t}$$

$$T = \frac{1}{2} J\left(\frac{\partial \theta}{\partial t}\right)^2$$

$$\frac{\partial T}{\partial t} = J \frac{\partial^2 \theta}{\partial t^2} \frac{\partial \theta}{\partial t}$$

$$\frac{\partial U}{\partial t} + \frac{\partial T}{\partial t} = 0$$

$$(FL\theta + J \frac{\partial^2 \theta}{\partial t^2}) \frac{\partial \theta}{\partial t} = 0 \qquad \dot{\theta} \neq 0$$

By using $\theta = \theta_{max} \cos \omega t$ $\qquad \frac{\partial^2 \theta}{\partial t^2} = -\omega_n^2 \theta$

$$\therefore \omega_n = \sqrt{F \frac{L}{J}}$$

$$\therefore f_n = \frac{1}{2\pi}\sqrt{F\frac{L}{J}}$$

C.6.1 Modified Castor Arrangement

The expression, above, indicates that the frequency can be increased by increasing the lag, L, and decreasing the rotational inertia, J. However, J includes a factor proportional to the square of the lag and a definite increase in f_n can only be accomplished by reducing mass. This was achieved by reducing the section of the fork (from 40 x 5 mm flat bar to 15.88 x 1.2 tubing). Then, even though the lag was increased from 50 to 90mm, calculations of inertias indicated an increase of 12 % in the natural frequency.

C.7 Square - Round Tubing Comparison

Sections of equal weight and thickness were compared for both torsion and bending

Bending

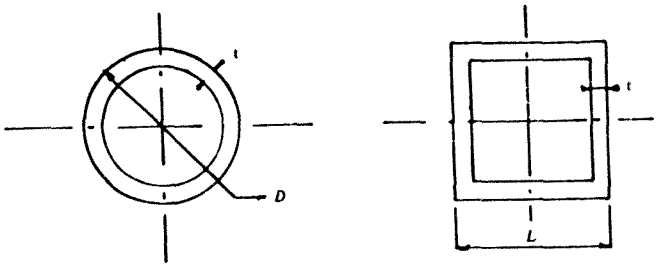

Figure C.7 Dimensions of sections for bending

for bending $\sigma = \frac{Mc}{I}$

A ratio of $\frac{\left(\frac{I_r}{c_r}\right)}{\left(\frac{I_s}{c_s}\right)} = \frac{I_r}{I_s} \times \frac{c_s}{c_r}$ needs to be evaluated.

where
s: refers to the square section
r: refers to the round section

for these sections (Figure C.7)

square: $A_s = L^2 - (L - 2t)^2 = 4Lt - 4t^2 = 4t(L - t)$

round: $A_r = \pi\left(\frac{D^2 - (D - 2t)^2}{4}\right) = \frac{\pi 4t(D - t)}{4} = \pi t(D - t)$

Sections of equal weight and thickness were compared so that an equivalent expression in terms of diameter D could be found for the length L

$A_s = A_r$

$4tL - 4t^2 = \pi tD - \pi t^2$

$L = \frac{\pi}{4} D + 0.215t$

say $t = aD$

where a is a proportionality factor

$I_s = \frac{1}{12}(L^4 - (L - 2t)^4)$

substitute $L = a'D$ and $t = aD$

where $a' = \frac{\pi}{4} + 0.215a$

$$= \frac{1}{12}\left((a')^4 D^4 - ((a' - 2a)D)^4\right)$$

$$= \frac{1}{12}\left((a')^4 - (a' - 2a)^4\right)D^4$$

$$\frac{1}{12}\left(\left(\frac{\pi}{4} \div 0.215a\right)^4 - \left(\frac{\pi}{4} - 1.785a\right)^4\right)D^4$$

$$I_r = \frac{\pi}{64}\left(D^4 - (D - 2t)^4\right)$$

$$= \frac{\pi}{64}\left(D^4 - ((1 - 2a)D)^4\right)$$

$$= \frac{\pi}{64}\left(D^4 - (1 - 2a)^4 D^4\right)$$

$$= \frac{\pi}{64}\left(1 - (1 - 2a)^4\right)D^4$$

$$\frac{I_r}{I_s} = \frac{3\pi}{16} \frac{1 - (1 - 2a)^4}{\left(\frac{\pi}{4} + 0.215a\right)^4 - \left(\frac{\pi}{4} - 1.785a\right)^4}$$

for the square section c is smallest at the outer edge when it is $\frac{L}{2}$ and is greatest at the corners where $c = \frac{L}{\sqrt{2}}$

$$\left(\frac{(c_1)_{smallest}}{(c_r)}\right)_{max} = \frac{\frac{L}{2}}{\frac{D}{2}} = \frac{\pi}{4} + 0.215a$$

A program was written to evaluate $\frac{I_r}{I_s}\frac{(c_1)_{smallest}}{(c_r)_{max}}$

It was found that the value was about 0.96 for all values of a between 0 and 0.3. At $(C_r)_{max}$ the value would be about $0.96\sqrt{2} = 1.36$. In general therefore the round tube has greater strength than square tube in bending.

Torsion

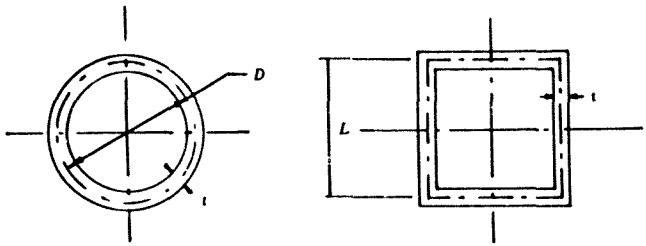

Figure C.8 Dimensions of sections for torsion

For torsion it was assumed that the thickness of the section was small compared to the cross-sectional length. The torsional stress could therefore be found using:

$$\tau_s = \frac{1}{2\Omega_s t} T$$

$$\tau_r = \frac{1}{2\Omega_r t} T$$

where

τ: torsional stress

Ω: Mean area that the cross-section contains

t: thickness

T: Torsion acting on the section

similar to the analysis done for bending $A_s = A_r$

square tube: $A_s = 4Lt$

round tube: $A_s = \pi Dt$

$$L = \frac{\pi}{4} D$$

$$Q_s = L^2 = \left(\frac{\pi}{4}\right)2D^2 = 0.617D^2$$

$$Q_r = \frac{\pi D^2}{4} = \frac{\pi}{4} D^2 = 0.785D^2$$

$$\frac{Q_r}{Q_s} = 1.273$$

The round section is also stronger in torsion than the square section.

Appendix D. Documents from the surveys

D.1 The Questionnaire

SURVEY OF PARAPLEGICS IN RURAL AREAS

1. Interview

1. DURATION		2. DISTANCE TRAVELLED	
3. INTERVIEW NO		4. DATE	

2. General

1. REGION		2. VILLAGE		3. SEX	
4. NAME				5. DATE OF BIRTH	
6. MECH OF INJURY		7. DATE OF ACCIDENT		8. MINE RELATED	
9. LEVEL OF INJURY	TOTAL	PARTIAL	10. DATE OF FIRST EMPLOYMENT		
11. OCCUPATION BEFORE INJURY					

3. Social

1. EDUCATIONAL LEVEL			2. GAINFUL ACTIVITY		
3. INCOME	YEARLY	MONTHLY	4. MARITAL STATUS		
5. SKILLS					
6. NO OF DEPENDANTS		7. STAYS WITH		8. ATTENDANT AVAILABLE	
9. PURPOSE OF ATTENDANT					
10. AGRICULTURAL ACTIVITY					
11. AGRICULTURAL INVOLVEMENT OF DISABLED PERSON					

4. Transport

1. MAIN TYPE		2. AVAILABILITY	
3. COST TO NEAREST TOWN		SINGLE	RETURN
4. ASSISTANCE REQD		5. CHARGE FOR WHEELCHAIR	

5. Distances (approximately)

1. TEBA		2. HOSPITAL		3. CLINIC	
4. SHOP		5. PUBLIC TRANSPORT		6. WATER	

6. Present Mobility Aids

1. APPLIANCES	a)		b)		c)		d)
2. USAGE	a)		b)		c)		d)
3. CONDITION	a)		b)		c)		d)

7. Wheelchair

1. TYPE		2. MODIFICATIONS	
3. PROBLEMS			
4. WHO PURCHASED THE WHEELCHAIR		5. COST OF WHEELCHAIR	
6. TYRE AND RIM SIZES		7. TYRE TYPE	
8. WHEELCHAIR REPAIR			
9. WHO REPAIRS		10. REPAIR SKILLS	
11. REPAIR FREQUENCY		12. AVAILABILITY OF SPARES	
13. PREVIOUS WHEELCHAIRS			
14. TRACTION PROBLEM		15. RANGE AROUND HOME	
16. MAIN OBSTACLES			
17. OBSTACLES NOW OVERCOME		18. WHEELCHAIR SKILLS	
19. DOES RAIN INFLUENCE PATHS			

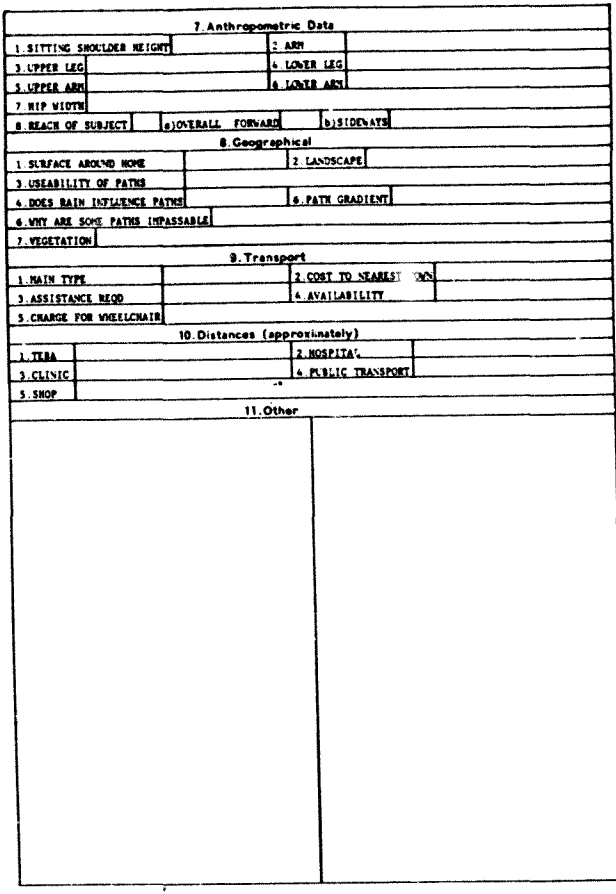

7. Anthropometric Data

1. SITTING SHOULDER HEIGHT		2. ARM	
3. UPPER LEG		4. LOWER LEG	
5. UPPER ARM		6. LOWER ARM	
7. HIP WIDTH			
8. REACH OF SUBJECT	a) OVERALL FORWARD		b) SIDEWAYS

8. Geographical

1. SURFACE AROUND HOME		2. LANDSCAPE	
3. USEABILITY OF PATHS			
4. DOES RAIN INFLUENCE PATHS		6. PATH GRADIENT	
6. WHY ARE SOME PATHS IMPASSABLE			
7. VEGETATION			

9. Transport

1. MAIN TYPE		2. COST TO NEAREST [illegible]	
3. ASSISTANCE REQD		4. AVAILABILITY	
5. CHARGE FOR WHEELCHAIR			

10. Distances (approximately)

1. TEBA		2. HOSPITAL	
3. CLINIC		4. PUBLIC TRANSPORT	
5. SHOP			

11. Other

D.2 The Introduction to the Surveys

My name is Heinrich Bartels. I am an engineering student at Wits University presently involved in a project to develop a wheelchair for your type of area. This means that I need to look at your present environment to understand your needs. Your mobility will be a important aspect of my study. Without knowing what your difficulties are I will not be able to develop a better wheelchair. The new wheelchair may not influence your life immediately, but it will benefit you even if someone else completes the project.

For the study to be useful, I need your help. Without it I will not be able to progress.

For the purpose of collecting information I have set up a questionnaire, so that I can record information I obtain from you. The questionnaire has three types of questions:

1. Questions that I will ask you to answer.

2. Questions which I will answer myself, including questions on your environment and wheelchair.

3. Measurements which will include your body dimensions. These are needed to size the wheelchair so that you will be able to fit into it.

I hope the questionnaire will not inconvenience you, for my only wish is to improve your mobility.

Appendix E. Estimated cost of a manufactured wheelchair

The prices listed were estimated using prices paid for items of the prototype. These items were purchased in December 1988 and January 1989.

Material

Steel tubing	19.88
Backrest material	13.46
Velcrotape	11.00
12"(304mm) BMX plastic wheels	17.00
16"(405mm) BMX spoked wheels	34.80
No-more-flats tubes	40.00
Chains	9.50
Bottom-Bracket (Axle) fittings	7.00
Castor fork fittings	7.50
Sprockets fixed 18 teeth	2.00
Sprockets fixed 14 teeth	2.00
Foam for backrest	4.37
Wood	8.00

Work:

Backrest stitching	20.00
Painting	40.00
Pedal Cranks	50.00
Pedal Handles	10.00
Estimate 12 hours work at R30/hour	360.00
Miscellaneous	40.00
Total	696.51

Appendix F. ABAQUS Input files and and an excerpt from an output file.

F.1 Abaqus Input

F.1.1 Complete input for the loading conditions according to the CG

```
*HEADING
ANALYSIS OF A MOBILITY AID FOR PARAPLEGICS IN RURAL AREAS
***DATA CHECK
*NODE
1010,-160,-235,985
1030,-120,-235,1010
1040,-84,-235,1016
1050,-50,-235 990
1070,50,-235,740
1090,240,-235,565
1110,70,-235,430
1130,0,-165,210
1150,0,-275,210
1170,400,-235,265
1190,400,-235,510
1210,685,-235,390
1250,710,-235,260
1270,750,-220,150
1310,930,-140,260
1390,890,-235,330
1410,895,-235,410
1430,1090,-280,425
1450,1090,-280,375
1470,1090,-280,350
1490,1040,-280,150
1089,60,-235,585
1129,35,-255,320
1138,320,-235,537.5
1139,235,-235,347.5
1149,200,-200,237.5
1209,555,-235,262.5
```

1309,790,-235,400
1419,990,-257.5,352.5
1510,1040,-280,0
1930 0,-220,0
2089,60,235,585
2129,35,255,320
2138,320,235,537.5
2139,235,235,347.5
2149,200,200,237.5
2209,555,235,262.5
2309,790,235,400
2419,990,257.5,352.5
2010,-160,235,985
2030,-120,235,1010
2040,-84,235,1016
2050,-50,235,990
2070,50,235,740
2090,240,235,565
2110,70,235,430
2130,0,165,210
2150,0,275,210
2170,400,235,265
2190,400,235,510
2210,685,235,390
2250,710,235,260
2270,750,220,150
2310,930,140,260
2390,890,235,330
2410,895,235,410
2430,1090,280,425
2450,1090,280,375
2470,1090,280,350
2490,1040,280,150
2510,1040,280,0
2930,0,220,0
3010,70,-225,430
3070,70,225,430
3110,400,-225,510
3170,400,225,510
3210,400,-225,265
3270,400,225,265

3310,850,-180,188
3370,850,180,188
*NODE,NSET = BOARDS
4110,65,-225,449
4170,65,225,449
4710,395,-225,529
4770,395,225,529
5110,750,-220,150
5170,750,220,150
5510,930,-140,260
5570,930,140,260
*NGEN,NSET = BOARDS
4110,4710,100
4170,4770,100
4110,4170,10
4310,4370,10
4510 4570,10
4710,4770,10
4130,4330,100
4330,4530,100
4530,4730,100
4150,4350,100
4350,4550,100
4550,4750,100
5110,5510,100
5170,5570,100
5110,5170,10
5310,5370,10
5510,5570,10
5130,5330,100
5330,5530,100
5150,5350,100
5350,5550,100
*NGEN
1010,1030,10
1050,1070,10
1070,1090,10
1090,1110,10
1110,1130,10
1130,1150,10
1150,1170,10

1170,1190,10
1190,1210,10
1210,1250,20
1250,1270,10
1270 1310,10
1250,1390,70
1390,1410,10
1410,1430,10
1430,1450,10
1450,1470,10
1470,1490,10
2010,2030,10
2050,2070,10
2070,2090,10
2090,2110,10
2110,2130,10
2130,2150,10
2150,2170,10
2170,2190,10
2190,2210,10
2210,2250,20
2250,2270,10
2270,2310,10
2250,2390,70
2390,2410,10
2410,2430,10
2430,2450,10
2450,2470,10
2470,2490,10
1130,1930,400
1150,1930,390
2130,2930,400
2150,2930,390
1490,1510,10
2490,2510,10
3010,3070,10
3110,3170,10
3210,3270,10
3310,3370,10
*ELEMENT,TYPE = B32,ELSET = MAIN1
1010,1010,1020,1030

```
1020,1030,1040,1050
1030,1050,1060,1070
1040,1070,1080,1090
1050,1070,1089,1110
1060,1090,1100,1110
1120,1110,1139,1170
1130,1090,1138,1190
1140,1170,1180,1190
1150,1190,1200,1210
1160,1170,1209,1250
1170,1210,1230,1250
1210,1250,1320,1390
1220,1210,1309,1410
1230,1390,1400,1410
1260,1430,1440,1450
1270,1450,1460,1470
1280,1470,1480,1490
*ELEMENT,TYPE = B32,ELSET = MAIN2
2010,2010,2020,2030
2020,2030,2040,2050
2030,2050,2060,2070
2040,2070,2080,2090
2050,2070,2089,2110
2060,2090,2100,2110
2120,2110,2139,2170
2130,2090,2138,2190
2140,2170,2180,2190
2150,2190,2200,2210
2160,2170,2209,2250
2170,2210,2230,2250
2210,2250,2320,2390
2220,2210,2309,2410
2230,2390,2400,2410
2260,2430,2440,2450
2270,2450,2460,2470
2280,2470,2480,2490
*ELEMENT,TYPE = B32,ELSET = FOOTSUP1
1180,1250,1260,1270
*ELEMENT,TYPE = B32,ELSET = FOOTSUP2
2180,2250,2260,2270
*ELEMENT,TYPE = B32,ELSET = FOOT1
```

1190,1270,1280,1290
1200,1290,1300,1310
*ELEMENT,TYPE = B32,ELSET = FOOT2
2190,2270,2280,2290
2200,2290,2300,2310
*ELEMENT,TYPE = B32,ELSET = ANGLE1
1240,1410,1420,1430
1250,1390,1419,1450
*ELEMENT,TYPE = B32,ELSET = ANGLE2
2240,2410,2420,2430
2250,2390,2419,2450
*ELEMENT,TYPE = B32,ELSET = FORKSB1
1070,1110,1120,1130
1080,1110,1129,1150
*ELEMENT,TYPE = B32,ELSET = FORKSF1
1100,1130,1149,1170
1110,1150,1160,1170
*ELEMENT,TYPE = B32,ELSET = FORKSB2
2070,2110,2120,2130
2080,2110,2129,2150
*ELEMENT,TYPE = B32,ELSET = FORKSF2
2100,2130,2149,2170
2110,2150,2160,2170
*ELEMENT,TYPE = B32,ELSET = AXLE1
1090,1130,1140,1150
*ELEMENT,TYPE = B32,ELSET = AXLE2
2090,2130,2140,2150
*ELEMENT,TYPE = B32,ELSET = ACROSS
3010,3010,3020,3030
3020,3030,3040,3050
3030,3050,3060,3070
3110,3110,3120,3130
3120,3130,3140,3150
3130,3150,3160,3170
3210,3210,3220,3230
3220,3230,3240,3250
3230,3250,3260,3270
3310,3310,3320,3330
3320,3330,3340,3350
3330,3350,3360,3370
*ELSET,ELSET = FOOTREST

```
FOOT1,FOOT2,FOOTSUP1,FOOTSUP2
*ELSET,ELSET = BOTLOAD
3010,3020,3030
*ELSET,ELSET = TOPLOAD
3110,3120,3130
*ELEMENT,TYPE = S8R,ELSET = BOARDS
4010,4110,4310,4330,4130,4210,4320,4230,4120
5010,5110,5310,5330,5130,5210,5320,5230,5120
*ELGEN,ELSET = BOARDS
4010,3,200,100,3,20,10
5010,2,200,100,3,20,10
*ELSET,ELSET = FOOTBORD
5010,5110,5020,5120,5030,5130
*ELSET,ELSET = SEATBORD
4010,4020,4030,4110,4120,4130,4210,4220,4230
*ELEMENT,TYPE = B32,ELSET = WHEELS
6110,1130,1530,1930
6120,1150,1540,1930
6130,2130,2530,2930
6140,2150,2540,2930
6210,1490,1500,1510
6220,2490,2500,2510
*NSET,NSET = SIDE1
1110,1190,1170,1290
*NSET,NSET = SIDE2
2110,2190,2170,2290
*NSET,NSET = CROSS1
3010,3110,3210,3310
*NSET,NSET = CROSS2
3070,3170,3270,3370
*NSET,NSET = BOARDLD
4120,4140,4160,4720,4740,4760,5320,5340,5360
*NSET,NSET = BEAMLOAD
3020,3040,3060,3120,3140,3160,3220,3240,3260
*EQUATION
2
CROSS1,1,1,SIDE1,1,-1
2
CROSS1,2,1,SIDE1,2,-1
2
CROSS1,3,1,SIDE1,3,-1
```

```
2
CROSS1,4,1,SIDE1,4,-1
2
CROSS1,5,1,SIDE1,5,-1
2
CROSS1,6,1,SIDE1,6,-1
2
CROSS2,1,1,SIDE2,1,-1
2
CROSS2,2,1,SIDE2,2,-1
2
CROSS2,3,1,SIDE2,3,-1
2
CROSS2,4,1,SIDE2,4,-1
2
CROSS2,5,1,SIDE2,5,-1
2
CROSS2,6,1,SIDE2,6,-1
2
BOARDLD,1,1,BEAMLOAD,1,-1
2
BOARDLD,2,1,BEAMLOAD,2,-1
2
BOARDLD,3,1,BEAMLOAD,3,-1
2
BOARDLD,4,1,BEAMLOAD,4,-1
2
BOARDLD,5,1,BEAMLOAD,5,-1
2
BOARDLD,6,1,BEAMLOAD,6,-1
*BEAM GENERAL SECTION,SECTION = PIPE,ELSET = MAIN1,DENSITY = 7.6E-9
22,1.6
0,1,0
200.E3,80.E3
*BEAM GENERAL SECTION,SECTION = PIPE,ELSET = MAIN2,DENSITY = 7.6E-9
22,1.6
0,1,0
200.E3,80.E3
*BEAM GENERAL SECTION,SECTION = PIPE,ELSET = FOOTSUP1,DENSITY = 7.6E-9
22,1.6
110,0,40
```

```
200.E3,80.E3
*BEAM GENERAL SECTION,SECTION = PIPE,ELSET = FOOTSUP2,DENSITY = 7.6E-9
22,1.6
110,0,40
200.E3,80.E3
*BEAM GENERAL SECTION,SECTION = PIPE,ELSET = FOOT1,DENSITY = 7.6E-9
22,1.6
-180,0,110
200.E3,80.E3
*BEAM GENERAL SECTION,SECTION = PIPE,ELSET = FOOT2,DENSITY = 7.6E-9
22,1.6
-180,0,110
200.E3,80.E3
*BEAM GENERAL SECTION,SECTION = PIPE,ELSET = ANGLE1,DENSITY = 7.6E-9
22,1.6
-55,-155,0
200.E3,80.E3
*BEAM GENERAL SECTION,SECTION = PIPE,ELSET = ANGLE2,DENSITY = 7.6E-9
22,1.6
-55,155,0
200.E3,80.E3
*BEAM GENERAL SECTION,SECTION = PIPE,ELSET = FORKSF1,DENSITY = 7.6E-9
15,1.6
-55,0,400
200.E3,80.E3
*BEAM GENERAL SECTION,SECTION = PIPE,ELSET = FORKSF2,DENSITY = 7.6E-9
15,1.6
-55,0,400
200.E3,80.E3
*BEAM GENERAL SECTION,SECTION = PIPE,ELSET = FORKSB1,DENSITY = 7.6E-9
15,1.6
-220,0,70
200.E3,80.E3
*BEAM GENERAL SECTION,SECTION = PIPE,ELSET = FORKSB2,DENSITY = 7.6E-9
15,1.6
-220,0,70
200.E3,80.E3
*BEAM GENERAL SECTION,SECTION = PIPE,ELSET = AXLE1,DENSITY = 7.6E-9
10,4.9
0,0,1
200.E3,80.E3
```

```
*BEAM GENERAL SECTION,SECTION = PIPE,ELSET = AXLE2,DENSITY = 7.6E-9
10,4.9
0,0,1
200.E3,80.E3
*BEAM GENERAL SECTION,SECTION = PIPE,ELSET = ACROSS,DENSITY = 7.6E-9
25,1.6
0,0,1
200.E3,80.E3
*BEAM GENERAL SECTION,SECTION = PIPE,ELSET = WHEELS
100,5
1,0,0
200.E3,80.E3
*SHELL SECTION,MATERIAL = WOOD,ELSET = BOARDS
20,5
*MATERIAL,NAME = WOOD
*DENSITY
800.0E-12
*ELASTIC
20.0E3,0.33
*ELSET,ELSET = SIDE1
MAIN1,FOOTSUP1,FOOT1,FORKSF1,FORKSB1,AXLE1,ANGLE1
*ELSET,ELSET = SIDE2
MAIN2,FOOT2,FOOTSUP2,FORKSF2,FORKSB2,AXLE2,ANGLE2
*ELSET,ELSET = BEAMS
SIDE1,SIDE2,ACROSS
*ELSET,ELSET = SIDECROS
SIDE1,3110,3210,3310
*ELSET,ELSET = ALLELEM
BEAMS,BOARDS,WHEELS
*ELSET,ELSET = MOSTELEM
BEAMS,BOARDS
*BOUNDARY,OP = NEW
1930,1,3
2930,1,2,3
2510,3
*PLOT,PLOT SIZE = 4
3-D VIEWPOINT:1,1,1
*DETAIL,ELSET = ALLELEM
*VIEWPOINT
1.,1.,1.
*DRAW
```

```
*DRAW,ELNUM
*PLOT,PLOT SIZE = 4
3-D VIEWPOINT:1,1,1
*DETAIL,ELSET = MOSTELEM
*VIEWPOINT
1.,1.,1.
*DRAW
*DRAW,ELNUM
*PLOT,PLOT SIZE = 4
SIDEVIEW:0,1,0
*DETAIL,ELSET = SIDECROS
*VIEWPOINT
0.,1.,0.
*DRAW
*DRAW,ELNUM
*PLOT,PLOT SIZE = 4
3-D VIEWPOINT:1,1,1
*DETAIL,ELSET = ALLELEM
*VIEWPOINT
1.,1.,1.
*DRAW
*DRAW,ELNUM
*PLOT,PLOT SIZE = 4
TOP VIEW
*DETAIL,ELSET = ALLELEM
*VIEWPOINT
0.,0.,1.
*DRAW
*STEP,LINEAR = NEW
LOAD FRAME
*STATIC
*DLOAD
ALLELEM,GRAV,9800,0,0,-1
TOPLOAD,PZ,-1.5311
BOTLOAD,PZ,-0.3578
TOPLOAD,PX,0.3711
BOTLOAD,PX,0.0867
*CLOAD
1070,1,-103
1070,3,-25
2070,1,-103
```

```
2070,3,-25
*EL PRINT,POSITION = NODE
*END STEP
```

F.1.2 Loading Conditions for a distributed load on the top cross-member

```
*STEP,LINEAR = NEW
LOAD FRAME
*STATIC
*DLOAD
ALLELEM,GRAV,9800,0,0,-1
TOPLOAD,PZ,-2
*EL PRINT,POSITION = NODE
*END STEP
```

F.1.3 Loading Conditions for a concentrated load on the seat corner

```
*STEP,LINEAR = NEW
LOAD FRAME
*STATIC
*DLOAD
ALLELEM,GRAV,9800,0,0,-1
*CLOAD
3110,3,-900
*EL PRINT,POSITION = NODE
*END STEP
```

F.2 Excerpt of Output

```
THE FOLLOWING TABLE IS PRINTED FOR ALL ELEMENTS WITH TYPE B32      AT THE NODES

ELEMENT     ND  SEC FOOT-    SF1          SF2          SF3          SM1          SM2          SM3
                PT NOTE

   1010     1010  0      8.6248E-11 -9.7470E-06 -3.9376E-12  -2.496     -1.8367E-11  5.0809E-12
   1010     1020  0      0.1984      0.3175     -5.4292E-12   4.992      3.6919E-11  7.3053E-13
   1010     1030  0      0.3968      0.6350     -6.9208E-12   12.48      9.2204E-11 -3.6199E-12
   1020     1030  0      0.7185      0.8843     -8.4041E-12   8.683      1.0063E-10 -1.7881E-12
   1020     1040  0      0.4384       1.177     -5.2961E-12   55.94      1.0996E-10 -8.6611E-11

   ABAQUS PRODUCTION VERSION 4-7-22                    DATE 12/14/89      TIME 16:57:24        PAGE    3
 FOR USE AT UNIVERSITY OF WITWATERSRAND UNDER ACADEMIC LICENSE FROM HKS, INC.

   ANALYSIS OF A MOBILITY AID FOR PARAPLEGICS IN RURAL AREAS                          STEP    1  INCREMENT    1
   LOAD FRAME                                                                   TIME COMPLETED IN THIS STEP   1.00
```

Appendix F. ABAQUS Input files and and an excerpt from an output file.

Appendix G. Pascal Source Code for the Stress Analysis

```
PROGRAM StressAnalysis(datain,dataout,Material);
TYPE AllElements = 0..255 ;
VAR SF1,
    SF2,
    SF3,
    SM1,
    SM2,
    SM3,
    MaxTresca,
    MaxMises: Real;
    RadiusOuter,
    RadiusInner,
    Area,
    AreaModulus,
    Thickness,
    TorsionalArea: ARRAY[1..3] OF real;
    I,
    SetElementConversion,
    MaxElement,
    Element: Integer;
    datain,
    dataout,
    Material: Text;
    Main,
    Forks,
    CrossMembers,
    Axles: SET OF AllElements;
    Heading: Boolean;
PROCEDURE InputOutputInitialisation;
BEGIN { Input/Output Initialisation }
reset(Material);
reset(datain);
rewrite(dataout);
END; {Input/Output Initialisation}
PROCEDURE NumberInitialisation;
BEGIN
```

```
MaxTresca: = 0.0;
MaxMises: = 0.0;
END; { NumberInitialisation }
PROCEDURE ElementInitialisation;
BEGIN
Axles: = (.9,109.);
Forks: = (.7,8,10,11,107,108,110,111.);
Main: = (.1..199.)-Axles-Forks;
CrossMembers: = (.200..255.);
END; { ElementInitialisation }
PROCEDURE ReadMaterial;
VAR J: Integer;
BEGIN
FOR J: = 1 TO 3 DO
readln(Material,Area(J.),AreaModulus(J.),
Thickness(J.),TorsionalArea(J.),RadiusInner(J.),RadiusOuter(J.));
END; { ReadMaterial }
PROCEDURE WriteHeadingForPipes;
BEGIN
writeln(dataout,' Element',' Max Normal ',' Torsional ',
'von Mises ');
END; { WriteHeadingForPipes }
PROCEDURE ReadInformation;
BEGIN
readln(datain,Element,SF1,SF2,SF3,SM1,SM2,SM3);
END; { ReadInformation }
PROCEDURE FindMaxStressInPipes;
VAR MaxMoment,
    AxialStress,
    BendingStress,
    MaxNormalStress,
    DirectShearStress,
    TorsionalShearStress,
    MaxDirectionalShearStress,
    MaxShearStress,
    Sigma1,
    Sigma2,
    TrescaMaxStress,
    MisesMaxStress,
    Theta:real;
```

```
  Check:boolean;
BEGIN
MaxMoment: = sqrt(sqr(SM1) + sqr(SM2));
AxialStress: = SF1/Area(.I.);
BendingStress: = MaxMoment/AreaModulus(.I.);
MaxNormalStress: = abs(AxialStress) + BendingStress;
DirectShearStress: = (4/3)*(sqrt(sqr(SF2) + sqr(SF3)))/Area(.I.)*
((sqr(RadiusOuter(.I.)) + RadiusOuter(.I.)*RadiusInner(.I.)
 + sqr(RadiusInner(.I.)))/
(sqr(RadiusOuter(.I.)) + sqr(RadiusInner(.I.))));
TorsionalShearStress: = SM3/(Thickness(.I.)*2*TorsionalArea(.I.));
MaxDirectionalShearStress: = abs(TorsionalShearStress) + DirectShearStress;
Theta: = arctan(MaxDirectionalShearStress*2/MaxNormalStress);
MaxShearStress: = abs(MaxNormalStress/2)*cos(Theta);
Sigma1: = MaxNormalStress/2 + MaxShearStress;
Sigma2: = MaxNormalStress/2-MaxShearStress;
TrescaMaxStress: = Sigma1-Sigma2;
IF (TrescaMaxStress/MaxNormalStress > 1.2) AND (TrescaMaxStress > 15.0) THEN
  Check: = true
  ELSE
  Check: = false;
IF TrescaMaxStress > MaxTresca THEN
  BEGIN
  MaxTresca: = TrescaMaxStress;
  MaxElement: = Element;
  END;
MisesMaxStress: = sqrt(sqr(Sigma1)-Sigma1*Sigma2 + sqr(Sigma2));
IF MisesMaxStress > MaxMises THEN
  MaxMises: = MisesMaxStress;
IF MisesMaxStress > 0.0 THEN
  BEGIN
  writeln(dataout,Element:5,'  ',MaxNormalStress:9:1,'  ',
  TorsionalShearStress:9:1,'  ',MisesMaxStress:9:1);
  END; { IF }
END; {FindMaxStressInPipes}
PROCEDURE MaxStressWrite;
BEGIN
writeln(dataout);
writeln(dataout,'Max von Mises Stress in Structure = ',MaxMises:9);
writeln(dataout);
writeln(dataout,'At Element',MaxElement);
```

```
END; { MaxStressWrite }
BEGIN { Main Program}
InputOutputInitialisation;
NumberInitialisation;
ElementInitialisation;
ReadMaterial;
read(datain,Element),
reset(datain);
SetElementConversion: = (Element DIV 10)-100;
IF SetElementConversion IN CrossMembers THEN
  Heading: = false
ELSE
  Heading: = true;
REPEAT
  ReadInformation;
  SetElementConversion: = (Element DIV 10)-100;
  IF SetElementConversion IN Main THEN
    BEGIN
    IF Heading = true THEN
      BEGIN
      WriteHeadingForPipes;
      Heading: = false;
      END;
    I: = 1;
    FindMaxStressInPipes;
    END
  ELSE
    IF SetElementConversion IN Forks THEN
      BEGIN
      IF Heading = true THEN
        BEGIN
        WriteHeadingForPipes;
        Heading: = false,
        END;
      I: = 2;
      FindMaxStressInPipes;
      END
    ELSE
      IF SetElementConversion IN CrossMembers THEN
        BEGIN
        IF Heading = true THEN
```

```
            BEGIN
            WriteHeadingForPipes;
            Heading: = false;
            END;
          I: = 3;
          FindMaxStressInPipes;
          END; { IF }
UNTIL eof(datain);
MaxStressWrite;
END.
```

Appendix H. Drawings

Drawing No	Description
2/1	General Assembly
2/2	Detail of frame
2/3	Miscellaneous
2/4	Modifications

Author Bartels Heinrich
Name of thesis Development Of A Mobility Aid For Paraplegics In Rural Areas. 1989

PUBLISHER:
University of the Witwatersrand, Johannesburg
©2013

LEGAL NOTICES:

Copyright Notice: All materials on the University of the Witwatersrand, Johannesburg Library website are protected by South African copyright law and may not be distributed, transmitted, displayed, or otherwise published in any format, without the prior written permission of the copyright owner.

Disclaimer and Terms of Use: Provided that you maintain all copyright and other notices contained therein, you may download material (one machine readable copy and one print copy per page) for your personal and/or educational non-commercial use only.

The University of the Witwatersrand, Johannesburg, is not responsible for any errors or omissions and excludes any and all liability for any errors in or omissions from the information on the Library website.