

https://dspace.org/

Development of a grassland monitoring system for the management of the wolkberg wilderness area.

Coombes, Peter, John.

1991
http://hdl.handle.net/10539/22949

Downloaded from a DSpace repository. https://dspace.org/

DEVELOPMENT OF A GRASSLAND MONITORING SYSTEM FOR THE MANAGEMENT OF THE WOLKBERG WILDERNESS AREA

Peter John Coombes

Degree awarded with distinction 11 December 1991

A thesis submitted to the Faculty of Science,
University of the Witwatersrand, Johannesburg,
for the degree of Master of Science.

March 1991

ABSTRACT

This study aimed to investigate, within the contemporary philosophy of science, key aspects of the paradigm formulated by the national Vegetation Monitoring Workteam (VMW), and thereby develop a grassland monitoring system to place the management of the Wolkberg Wilderness Area (WWA) on a testable basis.

The issues relevant to the designing of a monitoring system are (1) sample plot size, (2) the number of point observations required per plot, (3) sampling intensity or the number of plots per site and (4) the level of description associated with increasing sampling effort. These issues were investigated through a detailed pilot study with the objective of minimising subjectivity in the final choice of such issues.

Three different plot sizes were tested, of which a 40 X 40m plot was found to be the most suitable. The number of points per plot was established through investigating the dependence of replicate similarity on sets of points (sample size). 200 points per plot was found to be a practical, cost-efficient intensity for application in a detailed monitoring study. The number of plots per site and the level of description associated with increasing sampling effort were investigated simultaneously. Two different analysis procedures were used, namely replicate similarity and replicate ordination, with the aim of establishing an efficient sample size that achieves a reliable representation of the vegetational variation based on proportional species composition. The result is a set of models from which to calculate sampling intensity and the associated level of description based on the size of the area to be studied and *a priori* defined confidence levels.

Having selected the sampling design for the monitoring system it is necessary to formulate the grounds on which a null hypothesis (Ho) of there being no significant difference between abundance or relative abundance of baseline and follow-up surveys, will fail. This was accomplished by evaluating the results obtained through the established sampling design, in terms of sensitivity and power to known levels of vegetational change under increasing sampling intensity. Meaningful results and a satisfactory degree of sensitivity and power in the test of Ho was obtained at the 90% confidence level.

A central requirement for the implementation of a monitoring system is that management goals exist. To achieve the full benefit of the developed monitoring system it was necessary to develop a procedure for setting a management objective and subsequently translating this objective into operational goals with a known order of priority.

The developped monitoring system is finally incorporated through a meaningful sequence of steps set out in a detailed procedural guide-line, described in terms of an actual example. This procedural guide-line is specifically aimed at implementation by management, with the aspiration for the future management of the WWA to gain a competitive edge.

DECLARATION

I declare that this dissertation is my own work and that assistance from others is limited to that detailed in the acknowledgements. It is being submitted for the degree of Master of Science at the University of the Witwatersrand, Johannesburg, and has not been submitted before for any degree or examination at any other University. This research was carried out by me whilst initially employed by the Department of Environment Affairs, Forestry Branch and later the Transvaal Provincial Administration's Chief Directorate of Nature and Environmental Conservation.

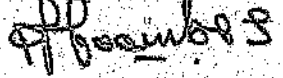

14 March 1991

ACKNOWLEDGEMENTS

I am greatly indebted to Mr G von dem Bussche of Forestry Branch, Department of Environment Affairs who identified the need for a project of this nature, and for his continual support, guidance and ability to stimulate enthusiasm throughout the duration of the research.

My special thanks to Professor M.T. Mentis for his sound guidance, motivation and criticism offered during the course of the research. As supervisor his ability to stimulate one's outlook on research and the broader "conservation world" will remain invaluable.

To Frank Pietersa, a special word of thanks for his assistance, support and the many stimulating discussions held during the long hours spent in the field. To the assistants from Wolkberg Wilderness Area Marius Snyders, Marius Wilken and Robert Malulaka, many thanks for the technical support in the field.

To Peter Dye of FORESTEK, C.S.I.R., Sabie my thanks for your guidance and encouragement during the initial phases of the project. To my colleagues of TPA Nature and Environmental Conservation many thanks for the constructive criticism during the developmental phases of the goal setting and prioritising procedure.

Finally a special thank you to my wife, Dagmar, for her understanding and support throughout the project.

Table of contents

	Page
CHAPTER 1 INTRODUCTION	1
1.1 Objectives	1
1.2 Justification	4
1.3 Definitions and concepts	5
1.4 Approach	10
1.5 Study area	11
1.5.1 Location	11
1.5.2 Land-use	14
1.5.2.1 Historical background	14
1.5.2.2 Present management	15
1.5.3 Geology and topography	16
1.5.4 Climate	17
1.5.5 Hydrology	22
1.5.6 Vegetation - general description.	22
1.5.7 The biota in relation to the grasslands	24
1.5.7.1 Plants	24
1.5.7.2 Mammals	24
1.5.7.3 Birds	25
CHAPTER 2 PILOT STUDY	26
2.1 Introduction	26
2.2 Objective	27
2.3 Plot size and number of points per plot	27
2.3.1 Introduction	27
2.3.2 Procedure	28
2.3.3 Results	32
2.3.4 Discussion	36
2.3.5 Conclusion	37
2.4 Sampling intensity	37
2.4.1 Introduction	37
2.4.2 Procedure	38
2.4.2.1 Replicate Similarity approach	39

Table of contents (continued)

Page

2.4.2.2 Replicate Ordination approach 41
2.4.3 Results 43
2.4.3.1 Replicate Similarity approach 43
2.4.3.2 Replicate Ordination approach 53
2.4.4 Discussion 67
2.4.5 Conclusion 69

CHAPTER 3 COMPARISON OF BASELINE AND FOLLOW-UP SURVEYS . . . 70
3.1 Introduction 70
3.2 Objective 71
3.3 Procedure 72
3.4 Results 75
3.4.1 Similarity coefficients 75
3.4.2 Ordination 76
3.5 Discussion 89
3.5.1 Similarity coefficients 89
3.5.2 Ordination 90
3.5.3 Conclusion 91

CHAPTER 4 MANAGEMENT OBJECTIVES AND GOALS. 93
4.1 Introduction 93
4.2 Objective 93
4.3 Procedure 94
4.4 Results 101
4.5 Discussion 104
4.6 Conclusion 106

CHAPTER 5 IMPLEMENTATION 108
5.1 Introduction 108
5.2 Procedural guide-line 108
5.3 Impact studies 142
5.3.1 Introduction 142
5.3.2 Procedure 142

Table of contents (continued)

	Page
5.3.3 Data analysis	144
5.4 Conclusion	144
CHAPTER 6 CONCLUSION AND SUMMARY	146
6.1 Conclusion	146
6.2 Final summary	147
REFERENCES	150

List of figures

		Page
Figure 1	A generalised algorithm for scientific management (Mentis 1984).	6
Figure 2	Bell-shaped species abundance curves in response to a hypothetical environmental gradient according to the Gaussian model of community structure (Gauch and Whittaker 1972).	8
Figure 3	Location of the Wolkberg Wilderness Area within the Transvaal.	12
Figure 4	Map of the Wolkberg Wilderness Area (shaded) and bordering farms.	13
Figure 5	Mean monthly rainfall for the period 1949 to 1987, recorded at New Agatha Weather Station.	20
Figure 6	Annual rainfall for the period 1949 to 1987, recorded at New Agatha Weather Station.	20
Figure 7	Types of residual plot pattern, (a) homoscedasticity (b) heteroscedasticity (c) calculation error (d) incorrect model to accurately describe the data.	35
Figure 8	Graphical display of the number of plots per site and the associated level of description (PS) retrieved at 90, 95 and 99% of the asymptotic value (β_0), by the exponential non-linear regression model.	50
Figure 9	Graphical display of the number of plots per site at 90, 95 and 99% of the asymptotic value, predicted by the Chapman-Richards non-linear regression model at the 95% confidence level.	59
Figure 10	Graphical display of the number of plots per site at 90, 95 and 99% of the asymptotic value, predicted by the Chapman-Richards non-linear regression model at the 99% confidence level.	60
Figure 11	Frequency histogram of similarity coefficients for the baseline survey and follow-up survey with 0% change.	79
Figure 12	Frequency histogram of similarity coefficients for the baseline survey and follow-up survey with 10% change.	80
Figure 13	Frequency histogram of similarity coefficients for the baseline survey and follow-up survey with 20% change.	81
Figure 14	Frequency histogram of similarity coefficients for the baseline survey and follow-up survey with 40% change.	82

List of figures (continued)

		Page
Figure 15	Plot of the first three detrended correspondence analysis axes in ecological space, for the baseline survey, where points are the location of plots.	84
Figure 16	Plot of the first three detrended correspondence analysis axes in ecological space, for the follow-up survey with 5% change, where points are the location of plots.	85
Figure 17	Plot of the first three detrended correspondence analysis axes in ecological space, for the follow-up survey with 10% change, where points are the location of plots.	86
Figure 18	Plot of the first three detrended correspondence analysis axes in ecological space, for the follow-up survey with 20% change, where points are the location of plots.	87
Figure 19	Plot of the first three detrended correspondence analysis axes in ecological space, for the follow-up survey with 40% change, where points are the location of plots.	88
Figure 20	Flow diagram of the monitoring procedure developed for the Wolkberg Wilderness Area.	110
Figure 21	Land facet map indicating the location of plots for the baseline survey. Small numbers indicate the plots for the early warning procedure and the larger numbers the additional plots required for the ordination analysis.	120
Figure 22	Land facet map indicating the location of plots for the follow-up survey. Small numbers indicate the plots for the early warning procedure and the larger numbers the additional plots required for the ordination analysis.	121
Figure 23	Frequency histogram of similarity coefficients for the baseline survey and follow-up survey compared in the test of the null hypothesis (Ho) of their being no significant difference between the two.	125
Figure 24	Dendrogram showing the hierarchical TWINSPAN classification of the baseline data.	126
Figure 25	Dendrogram showing the hierarchical TWINSPAN classification of the follow-up data.	127
Figure 26	Plot of the first three detrended correspondence analysis axes in ecological space for the baseline survey, where points are the location of plots.	134

Page

Figure 27 Plot of the first three detrended correspondence analysis axes in ecological space for the follow-up survey, where points are the location of plots. 135

Figure 28 Graphical 2-dimensional display, by SIMCA, of the baseline data (small numbers) with the follow-up data (large numbers) included as supplementary points, where points are the location of plots. 139

Figure 29 Graphical 2-dimensional display, by SIMCA, of the baseline data (small numbers) with the follow-up data (large numbers) included as supplementary points, where points are the location of plots in terms of their position in either firebelt 1 (1), firebelt 2 (2) or the block (B). 140

Figure 30 Graphical 2-dimensional display, by SIMCA, of the baseline data (small) with the follow-up data (large) included as supplementary points, where points are the location of plots in terms of their position on either a northern aspect (N) or southern aspect (S). 141

Figure 31 Block layout showing the combination of treatments. 143

List of tables

		Page
Table 1	Total rain days per annum for the period 1964 to 1987 recorded at New Agatha Weather Station.	19
Table 2	Mean monthly rain days based on a 34 year period from 1954 to 1987 recorded at New Agatha Weather Station.	19
Table 3	Monthly temperature extremes and mean daily range in degrees centigrade at New Agatha Weather Station over a 20 year period.	21
Table 4	Optimization of N, the number of points, using the inverse of the six fitted non-linear regression functions for each plot.	34
Table 5	Results of the REPSIM-SAS macro for determining plot intensity based on percentage similarity.	45
Table 6	Optimization, based on replicate similarity, of the number of plots per site (N), using the inverse of the fitted non-linear regression models, at 90, 95 and 99% of the asymptotic value.	46
Table 7	Number of plots per site at 90, 95 and 99% of the asymptotic value calculated from the exponential model used to describe the replicate similarity data of each site.	48
Table 8	Non-linear regression models fitted to the number of plots per site calculated from the exponential model used to describe the replicate similarity (PS) data.	49
Table 9	Inverse of the non-linear models, at 90, 95 and 99% of the asymptotic value, from which to calculate the number of plots required per unit area.	51
Table 10	Results of (1) the fitted multiplicative linear regression model to the mean PS retrieved for the 10, 25 and 100 ha sites and (2) the function to calculate the level of description (% internal association) associated with the number of plots required per unit area.	52
Table 11	Percentage non-significant Kolmogoro -Smirnov values of the frequency distribution comparisons of each J set of plots for 10, 25 and 100 ha sites, at 90 and 95% confidence levels.	54
Table 12	Number of plots (N) per site at 90, 95 and 99% of the asymptotic value, using the inverse of the fitted non-linear regression functions used to describe the non-significant Kolmogorov-Smirnov values at 95% and 99% confidence levels.	55

List of Tables (continued)

		Page
Table 13	Number of plots per site at 90, 95 and 99% of the asymptotic value of the Chapman-Richards model used to describe the non-significant Kolmogorov-Smirnov values at the 95% and 99% confidence levels.	56
Table 14	Non-linear regression models used to describe the number of plots per site (calculated from the Chapman-Richards model at 90, 95 and 99% levels of the asymptotic value) based on a 95% confidence level.	57
Table 15	Non-linear regression models used to describe the number of plots per site (calculated from the Chapman-Richards model at 90, 95 and 99% levels of the asymptotic value) based on a 99% confidence level.	58
Table 16	Inverse of the non-linear regression models, at 90, 95 and 99% of the asymptotic value for both the 95 and 99% confidence levels, from which to calculate the number of plots required per unit area.	61
Table 17	Results of the non-linear regression models used to describe the percentage of non-significant Kolmogorov-Smirnov (KS) values (level of description) at both the 95% and 99% confidence levels.	63
Table 18	Formula, derived from the inverse of the non-linear model, to calculate the level of description (percentage non-significant Kolmogorov-Smirnov values) associated with the minimum number of plots required pre unit area.	64
Table 19	Beta diversity per site with increasing sampling intensity (J).	65
Table 20	Results of the 4 X 2 contingency table using the Chi-Square option.	66
Table 21	Sampling intensity (J) and the associated level of description calculated for the 43.5 ha study site using the REPSIM and Replicate Ordination models.	73
Table 22	Sampling intensity with associated level of description to be tested through a baseline and follow-up surveys.	73
Table 23	Results of the test of the null hypothesis (Ho) between baseline and follow-up surveys based on the similarity coefficient approach.	78

		Page
Table 24	Results of the test of the null hypothesis (Ho) between baseline and follow-up surveys based on the ordination approach.	83
Table 25	Matrix for individual panelist scores.	98
Table 26	Matrix for calculating overall priority scores.	100
Table 27	Range of plots required and associated level of description calculated for a study site of 21.3 ha.	112
Table 28	Field form for recording the species code of the nearest rooted living plant to each of 200 points per plot.	122
Table 29	Form for arranging the data from the field form into the species code : density couplet format required for the ordination techniques.	123
Table 30	Results of the test of the null hypothesis (Ho) of no significant difference between baseline and follow-up surveys, using the Kolmogorov-Smirnov goodness of fit test.	124
Table 31	Numerical output of detrended correspondence analysis for the baseline data.	128
Table 32	Numerical output of detrended correspondence analysis for the follow-up data.	131
Table 33	Numerical output of simple correspondence analysis (SIMCA) for the baseline data with the follow-up data included as supplementary points.	136

CHAPTER 1 INTRODUCTION

1.1 OBJECTIVES

The purpose of this study was firstly to develop a system for monitoring the grassveld of the Wolkberg Wilderness Area (WWA), and secondly to draft a procedural guideline for the implementation of such a monitoring system with complementary impact studies. As management of the wilderness area is largely aimed at maintenance of species diversity (ß diversity), the study was based on proportional species composition.

A study of this nature must be seen as part of a larger whole aimed at fulfilling the requirements for adaptive management (Walters and Hilborn 1978; Mentis 1980, 1984). Clearly no stage of a study is independent of any other or of the components of adaptive management. The objectives of management, their operability, selection of approaches, methods, the sampling design, data analysis, interpretation and inference and finally the feedback to management are elements of an integrated whole that must be thought through at the planning stage (Mentis 1988).

Furthermore, it is important to consider during this planning phase the implications of the contemporary issues of scientific investigation within the field of ecology. Such issues are scientific method, statistical rigour and proper hypothesis testing (Loehle 1987). This has given rise to philosophical debate on the type of broad approach to be used in experimental design and the nature, limitations and implications of the inferences to be drawn (Mentis 1988). Two distinct approaches have been widely discussed in literature (Popper 1959; Romesburg 1981; Salt 1983; Loehle 1987; Mentis 1988) namely the hypothetico-deductive and inductive approaches. Mentis (1988) describes the hypothetico-deductive scheme as the collection and analysis of data to evaluate the truth of *a priori* hypotheses. Induction leads to the maturation of theory through improved understanding, thereby encouraging hypothesis generation or derivation of general statements from specific data (Loehle 1987; Mentis 1988).

Popper (1963, 1959) stated that an issue is scientific if it is potentially falsifiable or if it is, as Mentis (1988) describes, amenable to tests which might show a difference between the observed and the expected. Popper realized that there is no exact way of hypothesis testing which is why he emphasised the testing of "risky" predictions as an efficient means of getting to the truth. This implies that the development of knowledge in a particular field involves a process of selective retention among a suite of wild conjectures (Mentis

1988). In the testing of any such conjectures, falsification is based on the asymmetry between proof and disproof (Loehle 1987). In other words no conjectures can be proved correct although some may be found to fail (Mentis 1988). This necessitates the use of strong inference in science as advocated by Platt (1964) and Cousins (1985) in Mentis (1988).

However, the use of the hypothetico-deductive approach in ecology is faced with certain conceptual issues concerning the formulation of applicable hypothesis and defining the rationale against which a given hypothesis is refuted. The logistical problems of field ecology pertain to replication and temporal and spatial scales. True replication is impracticable or impossible as uniqueness is ubiquitous (Hinds 1984; Mentis 1988). Temporal and spatial scale often necessitate long term studies due to slow, subtle or complex processes which are further compounded at a macro scale (Mentis 1988).

According to Loehle (1987) many aspects of ecology do not necessarily lend themselves to analysis by the hypothetico-deductive approach, particularly in the fields of descriptive research. Bunge (1967) suggests that the process of explaining can provide theories that may be tested. In other words the inductive approach is used to generate hypothesis or as an end in itself for description. Mentis (1988) describes this as an ampliative approach, in that the content of the inference drawn is not present either explicitly or implicitly in the supposition, and gives a detailed discussion on ampliative techniques.

Neither of the two approaches are generally superior and their use should depend on the nature of the study, which will more then likely require a wise combination of the two, as suggested by Mentis (1988).

Vegetation monitoring is a field that should take cognisance of this philosophical debate, as it is a challenging task to unequivocally demonstrate vegetation change (Mentis 1988). This is particularly the case in Southern Africa where vegetation change is widely alleged, but only a few publications document such allegations. This is considered as being symptomatic of deficiencies in monitoring theory and practice, and gave rise during 1984 to a National Vegetation Monitoring Workteam (VMW). The primary aim of this work team was to develop procedures to monitor and evaluate the state of ecosystems in relation to the main uses to which they are put and in relation to their potential to satisfy future needs. A secondary objective was to identify gaps in our current knowledge of the structure and functioning of ecosystems relevant to interpreting monitoring results and their application to present and foreseeable uses (Mentis 1988).

The anticipated benefits from achieving these objectives were perceived by the VMW to include the following (Mentis 1988).

1) Baseline reference data can be provided in the context of control areas as advocated by Sinclair (1983).

2) Early warning of departures from management aims can be provided.

3) There may be the spin-off that monitoring data may provide further insight to ecosystem structure and functioning.

In terms of these benefits the following issues are considered as priority by the VMW.

1) Determination of the nature and direction of change. Change is considered to have vector-like properties.

2) Assessment of whether change is within the envelope of permissible limits. It is accepted that systems are dynamic.

3) Speculate about the cause of detected change using concomitant variables and/or supplementary data.

Within this framework the main challenges in monitoring vegetation are perceived by the VMW to be the following (Mentis 1988).

1) Selecting parameters which are sensitive to the issues of concern or interest in terms of the objectives and goals (Hinds 1984).

2) Specifying appropriate replication standards in a world that is full of unique places (Hinds 1984).

3) Selecting a technique that is appropriate to the system under study.

4) Selecting the appropriate monitoring frequency.

5) Deciding which concomitant variables may fruitfully be recorded eg rainfall.

This study is cast in the context of the concemporary philosophy of science, and aims to explore key aspects of the paradigm of the VMW with a view to furthering the objectives of this working group and setting the management of the WWA on a testable basis. Under this aim the specific objectives of the study were the following.

1) Establish the minimum number of point observations to achieve a stated level of precision under varying plot size, to determine a field procedure for observing proportional species composition.

2) Describe, using the developed field procedure, how the precision of description increases with increasing sampling effort.

3) Test the efficiency of the field procedure based on an optimum cost effective sampling design.

4) Prescribe one or more systems for monitoring the grasslands of the WWA.

5) Prescribe impact studies of man-induced disturbances to complement the monitoring and to facilitate identification of possible causes of likely future change.

1.2 JUSTIFICATION

Ecosystems are not static but are, to a greater or lesser extent, both spatially and temporally dynamic. Change within the limits of a system is according to Holling (1973) critical for the persistence and resilience of many ecosystems. To manage within a dynamic system, it is important to firstly determine the nature and direction of change, as change has vector like properties. Second it is important to assess whether change is within the permissible limits of the system (Mentis 1988).

The permissible limits of a system are determined by pre-defined management objectives. However, management objectives are normally broadly phrased statements of intent that are poorly falsifiable and either difficult or impossible to quantify. According to Mentis (1984) these general expressions of intent need to be translated into precise goals or written in operational terms. von Gadow (1978) describes a goal as being a more explicit translation of an objective which is only operational if (1) it is realisable, (2) the degree of attainment can be quantified and (3) the time of attainment has been specified.

The WWA, which forms a valuable baseline control area as defined by Sinclair (1983), cannot be regarded as a complete, independent, self-supporting ecosystem. Such a system is susceptible to change and necessitates an adaptive management approach. The Chief Directorate of Nature and Environmental Conservation (CDNEC) of the Transvaal Provincial Administration is the present custodian of the Wilderness Area and manages it extensively by way of controlled

winter and early spring block burns to achieve the set objectives. The objectives are concerned with (1) the sustained yield of high quality water and (2) the maintenance of species diversity. The objectives as they presently stand are poorly falsifiable and need to be described in operational terms. Additionally the degree of attainment of, or nature of departure from, the pre-defined objectives has not been assessed. This does not conform with the requirements of adaptive management (Walters and Hilborn 1978; Holling 1978; Mentis 1980, 1984), neither does it conform with Popper's (1983) concept of falsifiability. In this sense, such management is rendered non-scientific. Additionally, according to Mentis (1984) the practice of allegedly managing without periodically assessing the degree of goal attainment is a contradiction in terms.

In terms of this discussion, there is undoubtedly a need to position the management of the WWA on a more testable, scientific foundation than is current practice.

1.3 DEFINITIONS AND ICEPTS

To facilitate later discussion it is important that relevant definitions and concepts are clearly established at the outset.

Monitoring according to the vegetation monitoring work-team (Mentis 1988) is the repeated statistical testing of the null hypothesis of no significant difference between follow up and baseline surveys or between observed and expected system state or behaviour, in measurable and meaningful parameters which are sensitive to impact of not necessarily known location and timing.

Implicit in this definition are (1) 'no difference' does not mean absolutely no difference, but rather departure beyond the limits of change fixed by pre-defined objectives, (2) if change does occur beyond the permissible limits, management will need to know the probable cause if it is to consider reversing the change (Mentis 1988).

This definition is meaningful as firstly, based on Green's (1979) decision key, monitoring aims to detect change rather than its cause. Secondly, monitoring aims to measure only the salient parameters of a system with respect to the set objectives, as it is not possible to measure everything. Thirdly, this definition complies with Hind's (1984) requirement that monitoring be purposeful. Fourthly, the setting of null and alternate hypotheses distinguishes monitoring from purely descriptive exercises (Mentis 1988).

According to Ferrar (1983) an ideal or even functional monitoring system cannot be achieved in one step. He suggests a framework for initiating a monitoring system which is then improved with experience. Mentis (1984) has developed such a framework, placing monitoring within a management context (figure 1).

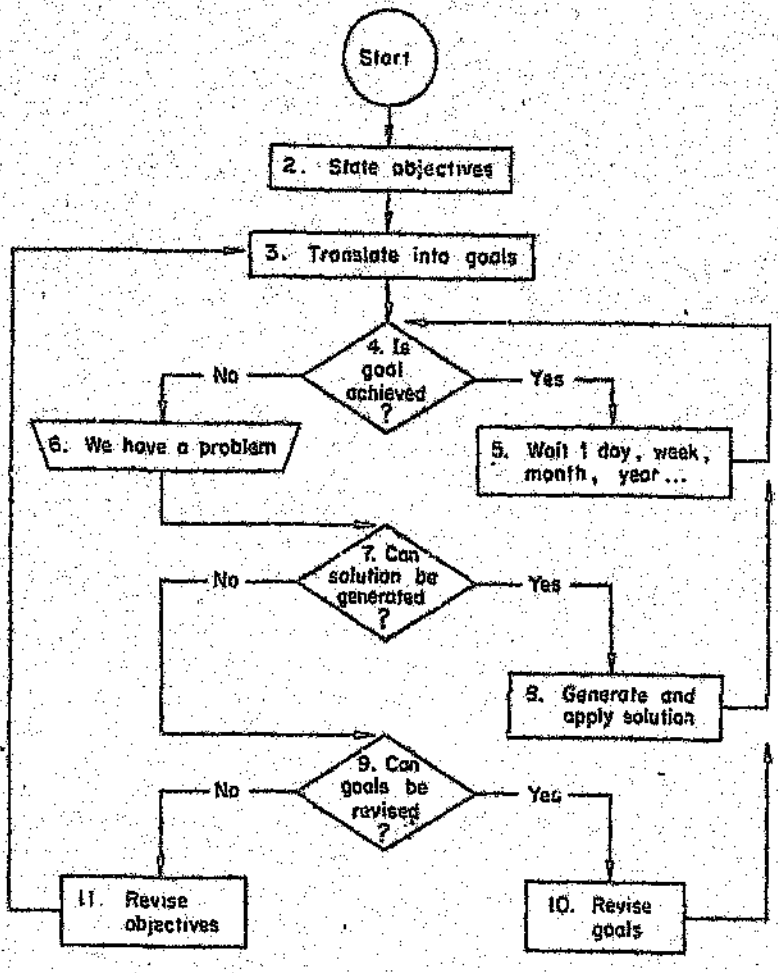

Figure 1. A generalised algorithm for scientific management (Mentis 1984).

The prerequisite for this approach to management is a statement of objective (step 2 in figure 1) which as mentioned earlier needs to be interpreted in operational terms or goals (step 3 in figure 1). Having satisfied this requirement the system must be examined to determine the degree of attainment or departure from pre-defined goals by way of monitoring (step 4 in figure 1) (Mentis 1984).

Before any routine monitoring can begin, baseline data must be available to provide a standard against which to detect a change. Baseline data are collected and analysed with the aim of defining the present state of the biotic community under the existing environment. The present state may contain patterns of spatial and temporal variation which are to be incorporated into the baseline model (Green 1979). According to Ferrar (1983) a baseline survey is partly a broad description, and partly it may be seen as the first cycle in the repeated measurements that comprise all monitoring systems.

As mentioned earlier, monitoring aims to detect change but does not aim to detect the cause of change. Without knowing possible causes of change, the prescription of remedial management measures is not possible. A need exists to identify likely causes of future change. This is accomplished by way of impact studies which endeavour to ascertain whether a specific impact or disturbance actually causes change and if so to describe the nature and direction of such change, as vegetational change has vector like properties. An impact study must be designed to judge impact effects against previously collected baseline data, and is best used when the results provide the basis for subsequent monitoring to detect further impacts of the same type (Green 1979).

A primary objective of the WWA is concerned with the maintenance of species or biotic diversity. Biotic diversity as discussed by the Grassland Monitoring Work-team (Mentis 1984) is a cluster of concepts summarised as follows.

1) Intraspecific genetic diversity. Individuals of a population may be genetically variable, similar or identical, depending on whether reproduction is sexual or asexual, and if sexual depending on the degree of in- and out- breeding. Such variation is not within the terms of reference of this study.

2) Alpha diversity (α-). Species constituting a community display, according to Peet (1974), three types of alpha diversity. First, species richness (αr) is the number of species occurring in a community of concern. Second, equitability (αe) measures the

evenness of the distribution among species of a community. A combination of richness and equitability indicates heterogeneity (α).

3) Structural community diversity. Communities have structural dimensions in the sense of the growth forms, sizes, densities, layerings, etc. of the organisms present. It is presumed that (α) would be diagnostic of structural diversity, as these characteristics are species specific.

4) Beta diversity (β-). This is the rate of turnover of species along an environmental gradient. A biotic community is a coincidence of species whose abundance changes gradually or suddenly in time and space, according to gradual or sudden changes in environmental factors. Species are depicted by scattered bell-shaped Gaussian species response curves along an environmental gradient (figure 2).

5) Gamma diversity. The composite (α-) and (β-) diversity of an entire landscape or ecosystem.

Each type of diversity can be estimated by various methods. There is therefore no single correct method by which to estimate (β) diversity, which is of concern to this study. The outcome is that the researcher must develop a cost-effective sampling method under the inherent variability of the vegetation to be studied.

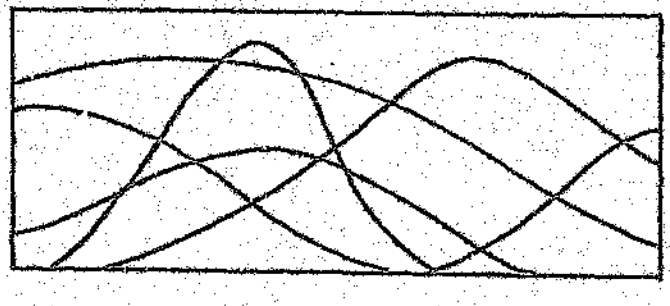

Figure 2. Bell-shaped species abundance curves in response to a hypothetical environmental gradient according to the Gaussian model of community structure (Gauch and Whittaker 1972).

Finally, the chosen sampling technique and intensity must be sensitive to the pattern of the vegetation to be studied. It is difficult, if not impossible, to understand all the factors responsible for a certain vegetation pattern. Often a scale of pattern is related to one of the more obvious or more easily measured of a group of closely interrelated environmental factors (Kershaw and Looney 1985).

According to Greig-Smith (1983) patterns of distribution differ not only in scale, but also in intensity, which is the degree of difference between different parts of the area under consideration. Kershaw and Looney (1985) define patterns in vegetation as the spatial arrangement of individuals of a species. Greig-Smith (1983) indicates that a multitude of variable factors are present, all having a greater or lesser effect on vegetation pattern. He has divided these factors into internal factors, intrinsic to the plant and environmental or external factors. The external factors range from the obvious measurable influences such as temperature, humidity and concentration of nutrients, through obvious but less measurable factors such as soil texture, to little understood effects such as specific secretions from other plants. The intrinsic factors have mainly to do with the effect of position of the plant and effect of age. Effective seed dispersal distance is also an intrinsic factor. These factors do not act independently, but exhibit numerous and complex interactions of which little is presently known (Greig-Smith 1983).

Kershaw and Looney (1985) divided pattern into three major types, namely morphological, environmental and sociological patterns. Morphological pattern is where the morphology of the species will produce small scale patterns which will be imposed on other species present. Such cases for example are where a species has a densely tussocked form, or where the basal leaves form a rosette and the smallest pattern present will be a measure of the mean size of an individual. Environmental pattern develops in vegetation in response to a variation of one of the major environmental factors and produces a pattern of density distribution. The determination of gross differences in vegetation by environmental factors is accepted as self-evident. On the other hand it is uncertain how far the smallest differences between samples of vegetation are environmentally determined and how far they are stochastic. Sociological pattern is a product of the interaction between species and between individuals, which may or may not be directly modified by micro-environment. Such sociological effects frequently form a mosaic of patches of varying density levels, dynamically related to each other in time and space. Numerous studies have examined the role of competition in determining the spatial pattern of plant communities (Smith and Walker 1983).

Pielou (1962) suggests that if intraspecific competition is taking place within a plant population, unsuccessful competitors will either be stunted or else completely unable to establish themselves. This implies that the closer two plants are to each other, the more intense the competition between them. This was examined on shrubs by Yeaton and Cody (1978) in the Mojave and Yeaton, Travis and Gilinsky (1977) in the Sonoran deserts. Both studies showed a significant positive correlation between distance to the nearest neighbour and the combined size of the plants. In both cases it was suggested that these results were evidence of inter and intraspecific competition.

1.4 APPROACH

My initial approach was to develop a sampling procedure through a pilot study and to then complete a baseline survey of the WWA. However, as I progressed in the pilot study, problems that would add to overall sampling error became apparent. Firstly, correct identification of the many young and/or non flowering plants posed problems. Secondly, the effect of rapidly changing facies due to the typical pyric succession of the moist grasslands could confound results, particularly between baseline and later follow-up surveys.

These potential problems made me very much aware of the importance of the predictive ability of a monitoring system in being able to detect true vegetational change, and not change due to sampling inadequacies as suggested in the paradigm of the VMW (Mentis 1987). For this reason and the need for future monitoring within the Directorate of Nature and Environmental Conservation (DNEC) reserves to be carried out by reserve staff, I changed the approach of the study to developing a tested, optimal, cost effective sampling design for the grassland areas.

The development of the sampling design concentrated on (1) investigating the effect of different plot sizes, (2) optimizing the number of point observations per plot to achieve stated levels of description and (3) optimizing the number of plots required per unit area for increasing levels of description. The developed sampling design was then tested through an iterative procedure of baseline and follow up surveys. This would result in a monitoring procedure of known descriptive and predictive ability based on the type and degree of change expected within the grasslands of the WWA, for implementation by the reserve personnel.

This approach was considered to be a more appropriate, cost effective and wiser option than an entire baseline survey with unknown predictability.

1.5 STUDY AREA

1.5.1 LOCATION

The study was conducted in the Wolkberg Wilderness Area (WWA) of Serala State Forest. The WWA is 19 270 ha in extent and forms part of the Northern Transvaal Drakensberg and the Strydpoort Mountain Ranges. The Wilderness Area is situated approximately 15 km due west of the town of Tzaneen and is centred on latitude 24°05' S and longitude 30°05' E (Figure 3).

The north eastern and eastern sides of the WWA are bounded by New Agatha State Forest of the Department of Environment Affairs, and Lebowa comprised of Mammathola Plantation, Mogoboya's Location and Mafefe's Location. The southern part of the Wilderness Area is bounded by Lekgalameetze Nature Reserve of the Department of Development Aid. To the west, the Wilderness Area borders on private farms, namely Ashmole Dales and Aden, while on the north the private farm Georges Valley forms the boundary (Figure 4).

Situated within the Wilderness Area is a portion of the farm Aloe which was privately owned and planted to *Pinus patula*. During Forestry Branch of the Department of Environment Affairs acquired the farm for incorporation into the Wilderness Area. The previous owners were granted a period of ten years for the exploitation of the trees.

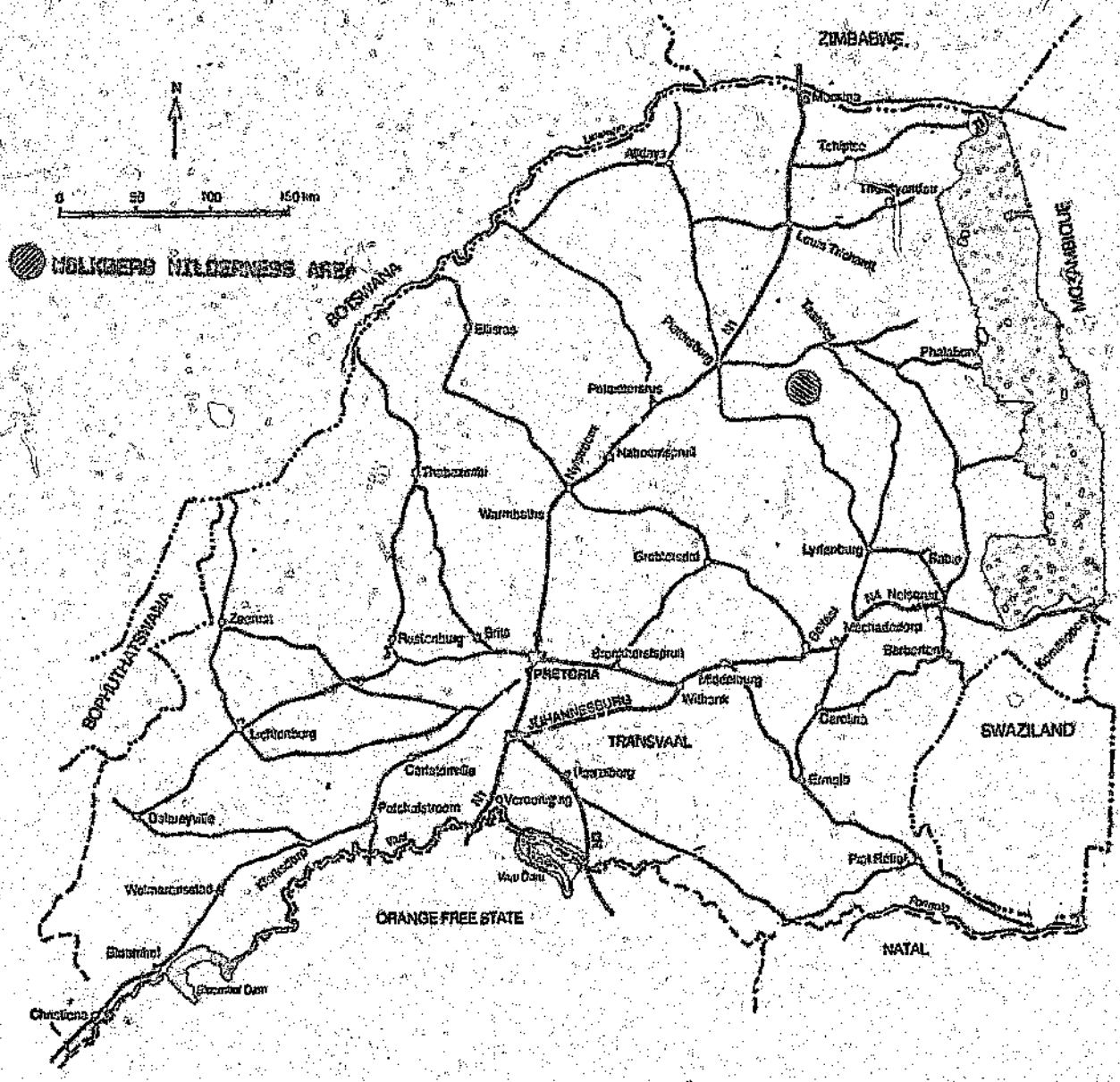

Figure 3. Location of the Wolkberg Wilderness Area within the Transvaal.

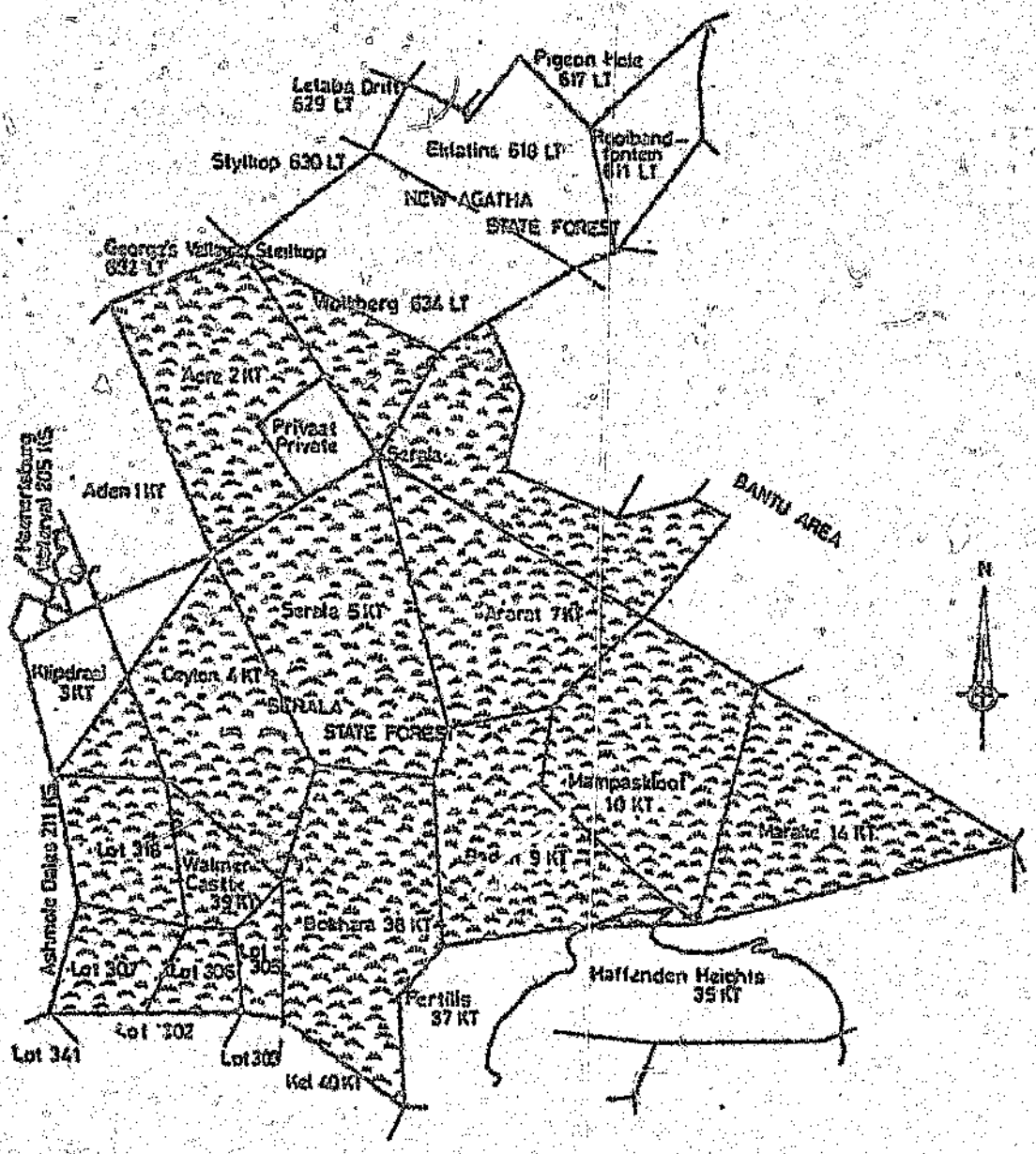

Figure 4. Map of the Wolkberg Wilderness Area (shaded) and bordering farms.

1.5.2 LAND-USE

1.5.2.1 HISTORICAL BACKGROUND

The first settled human occupation known in the region was of Sotho tribes along the foothills of the Drakensberg and the lower reaches of the Mohlapitze River (Krige and Krige 1943). According to Bulpin (1952) the first Bantu, offshoots of the Karanga people of Rhodesia, started to drift into the Transvaal about 1000 AD but were never particularly numerous. Later than this Karanga fragment, about 1400 AD, came the completely foreign migration of the Sotho speaking tribes, of which one group the Baralong entered the Transvaal from Bechuanaland today known as Botswana. The Baralong and their offshoots gradually spread themselves over the Transvaal and dispersed into several independent tribes. About 1500 AD, one such tribe occupied the region along the eastern escarpment, north of the Olifants River, displacing a small clan of Karanga people who had previously settled in this area.

Bulpin (1952) mentions that a few hunters and other Europeans had probably visited the Tzaneen area by the mid-nineteenth century. By the 1870's the upper escarpment of the Magoebaskloof Region appears to have been sparsely settled by white farmers and woodcutters (Lane Poole 1909). According to Rev. W. Krause (pers comm) in Scheepers (1977) almost all farms in the Tzaneen area were occupied by the middle 1890's.

There is scant historical documentation covering the actual Wilderness Area itself. However, it appears that the area was fairly intensively farmed at one stage, based on the number of remains of old homesteads within the area. Due to the rugged nature of the Wilderness Area it is probable that the farms were used mainly for grazing with a few cultivated fields along the larger river valleys. According to Whipp (1978) a number of English settlers were established in the area by the British Government after the Boer War. In particular it is known that shortly after the Boer War a certain Mr H. Whipp settled on the farm Ehlatine which is now part of New Agatha State Forest (Whipp 1979). He later acquired the farm Wolkberg as well (figure 2) and farmed with cattle and sheep and cultivated tomatoes. He farmed the area until his death during 1935, after which the Department of Forestry acquired the properties.

The site of the present office complex of the WWA was the homestead of a Dr. Jordaan who owned the majority of farms along the Mohlapitze River. He cultivated crops in the river valley and farmed with cattle and sheep on the hills to the south of the Mohlapitze River. During this period it was noted by vd Merwe (1970) that uncontrolled fires

were common, annually burning 70 to 80% of the Wilderness Area. Due to limited success with farming Dr Jordaan sold the farms during 1970 to the Department of Forestry for mountain catchment conservation purposes.

The area was set aside by the Minister of Forestry on the 28th of October 1977 as a Wilderness Area in accordance with the Forest Act.

During 1978 a fire protection plan was approved whereby the entire Wilderness Area was divided into seven blocks and burnt systematically on a 24 to 48 month rotation, during either winter or early spring. Uncontrolled fires still ravaged the area under this plan (von dem Bussche 1980) and a revised fire plan was implemented during 1980. Under this new plan the area was divided into 32 blocks, based largely on vegetation physiognomy and practical boundaries such as cliff faces, rivers and tracks. The blocks were burnt on either an 18 or 24 month rotation during either winter or early spring.

The Wilderness Area was controlled and administered by Forestry Branch of the Department of Environment Affairs from the date of proclamation until April 1987. Thereafter the administration of the area was handed over to the DNEC of the Transvaal Provincial Administration. Policy control is still maintained by Forestry Branch under the Forest Act.

1.5.2.2 PRESENT MANAGEMENT

Management is prescribed in terms of the stated management objectives which are concerned with (1) maintenance of species diversity and (2) maintenance of an optimal sustained yield of high quality water (von dem Bussche 1980: Coombes 1987).

Vegetation is the most readily manageable ecosystem component on a large scale, whether for water catchment conservation, soil conservation or wildlife habitat. Management has therefore concentrated on techniques for manipulating the vegetation.

The primary management tool employed in the WWA is fire. Controlled burns are applied under the following objectives (von dem Bussche 1980; Coombes 1987) to

1) maintain fire as an integral and natural component of the ecology of the WWA,
2) create a mosaic of vegetation pattern to provide maximum diversity at any given time,

3) minimize the spread of wild fires into and within the Wilderness Area,

4) maintain or where necessary develop a plant cover for water catchment and soil conservation.

The Wilderness Area has been divided into 32 burning blocks. The high elevation grassland blocks are burnt according to research findings largely from the Natal Drakensberg (Staples 1926,1930; Scott 1952; Killick 1963; Edwards 1968; Everson 1985) and practical experience gained under local conditions.

A fire rotation of 18 to 36 months is applied and burning restricted to the dormant period of the sward during winter or early spring before growth commences.

1.5.3 GEOLOGY AND TOPOGRAPHY

Characteristic of the Wilderness Area are high lying relatively flat plateaus above a steep escarpment. Below the escarpment are talus slopes leading to the valleys and foothills, and beyond the boundaries of the Wilderness Area, the plains of the Lowveld. The highest point within the Wilderness Area is Sersla Kop, 2050 m above sea level and 1400 m above the Lowveld. The lowest point at 735 m above sea level occurs in the south where the Mohlapitze River leaves the Wilderness Area (figure 2).

The landforms of the Wilderness Area are largely determined by the underlying geological structure. The area was initially geologically surveyed between 1907 and 1911 (Schwellnus, Engelbrecht, Coetze, Russell, Malherbe, van Rooyen and Cooke 1962). The latest survey was completed by Schwellnus et al (1962), from which the following description is taken.

The WWA is comprised of the Dolomite and Black Reef Series of the Transvaal System, the Wolkberg Formation and the Godwan Formation.

Only two of the three stages of the Dolomite Series of the Transvaal System occur within the Wilderness Area. They are firstly the Main Dolomite Stage which is comprised largely of grey to greyish-blue dolomitic limestone. Its weathered surface is dark grey or brownish with a characteristic grooved appearance. Second is the Banded Ironstone Stage which is represented by only a small strip in the south of the Wilderness Area. The upper portion of this stage has major developments of asbestos.

The Black Reef Series of the Transvaal System occurs in a ca .oo m strip in the Strydpoort Range. Two zones are identified. The Basal Arenaceous Zone consisting of quartzite and sandstone with inter bedded shale layers and the Transition Beds which forms a transition zone to the Dolomite Series. This zone is made up of shale with several thin interbedded bands of quartzite and lenticular layers of dolomite.

The Wolkberg Formation is the major component of the upper portions of the Northern Transvaal Drakensberg and Wolkberg and almost the whole of the Strydpoort Ranges. The quartzite zones of this formation, together with the Godwan quartzite are responsible for the principal physiographic features of these mountains.

The Godwan Formation is present only in isolated localities in the lower portions of the Wolkberg and Strydpoort Ranges, where it was deposited on a very uneven surface of Archeaen Granite and now only fills local basins in the latter.

1.5.4 CLIMATE

The climate of the WWA is strongly influenced by the broken topography and elevational variation. Unfortunately little data is available for the Wilderness Area, but the climate of the higher lying areas above 1200 m can be inferred from the nearby New Agatha Weather Station, and statistics from the South African Weather Bureau's "Climate of South Africa" publications.

The rainfall over much of the Wilderness Area is influenced by the escarpment along the western border and is largely orographic precipitation in the form of drizzle. Thunderstorms occur sporadically throughout the rainy season but contribute a small factor to the total annual rain days (table 1). Mist occurs frequently at elevations above 1300 m during the summer months from October to April and greatly adds to the annual precipitation. However, no figures are available. The rainfall is strongly seasonal as shown by table 2 and figure 5. Based on 25 years data, 84% of the annual rainfall falls during November to April with 4.5% falling during the winter months from June to August. The mean annual rainfall over a 39 year period was 1431.98 mm with a maximum of 2501.3 mm and a minimum of 751.6 mm (figure 6). The mean rain days per year over 24 years was 86 with a mean rainfall per rainy day of 15.2 mm (table 1).

The distribution of a plant species or community is largely limited by extremes of climatic factors. Over a 15 year period, temperatures in excess of 35° c were only experienced during three months from

October to December (table 3). Table 3 also demonstrates the differences in the monthly means of the daily ranges of temperature. The largest daily ranges occur during early spring and the smallest during late summer and autumn.

Table 1. Total rain days per annum for the period 1964 to 1987 recorded at New Agatha Weather Station.

YEAR	RAIN DAYS
1964	67
1965	64
1966	72
1967	78
1968	73
1969	72
1970	61
1971	96
1972	103
1973	104
1974	109
1975	115

YEAR	RAIN DAYS
1976	70
1977	75
1978	84
1979	97
1980	77
1981	100
1982	76
1983	67
1984	102
1985	103
1986	104
1987	88

Mean rain days per annum for the period 1964 to 1987 = 86

Table 2. Mean monthly rain days based on a 34 year period from 1954 to 1987 recorded at New Agatha Weather Station.

MONTHS	MEAN RAIN DAYS
January	13
February	11
March	9
April	6
May	3
June	2
July	2
August	3
September	4
October	8
November	11
December	12

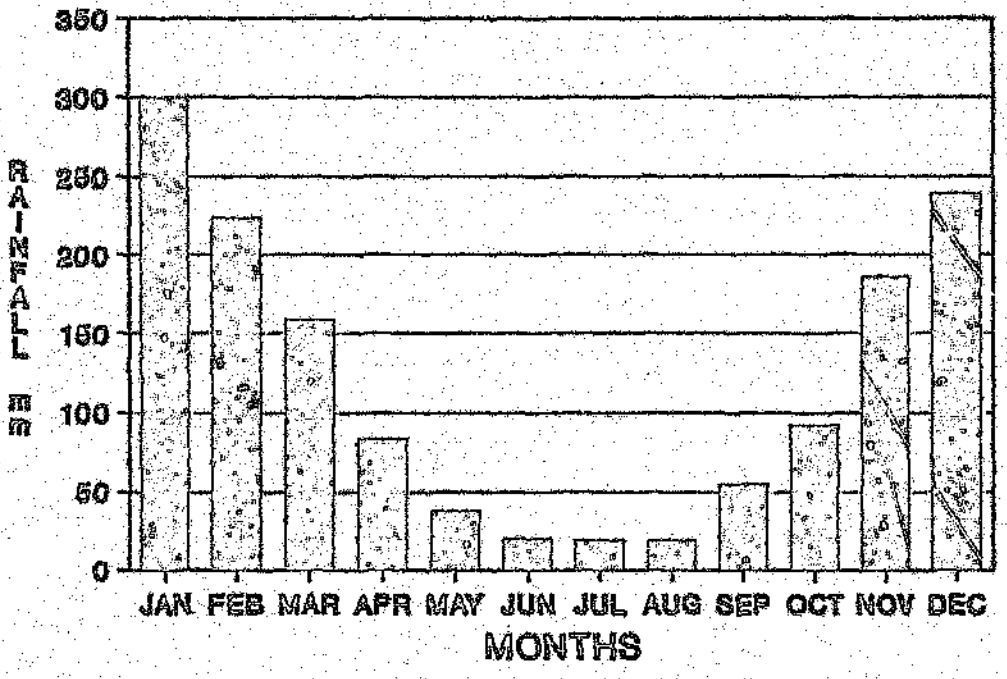

Figure 5. Mean monthly rainfall for the period 1949 to 1987, recorded at New Agatha Weather Station

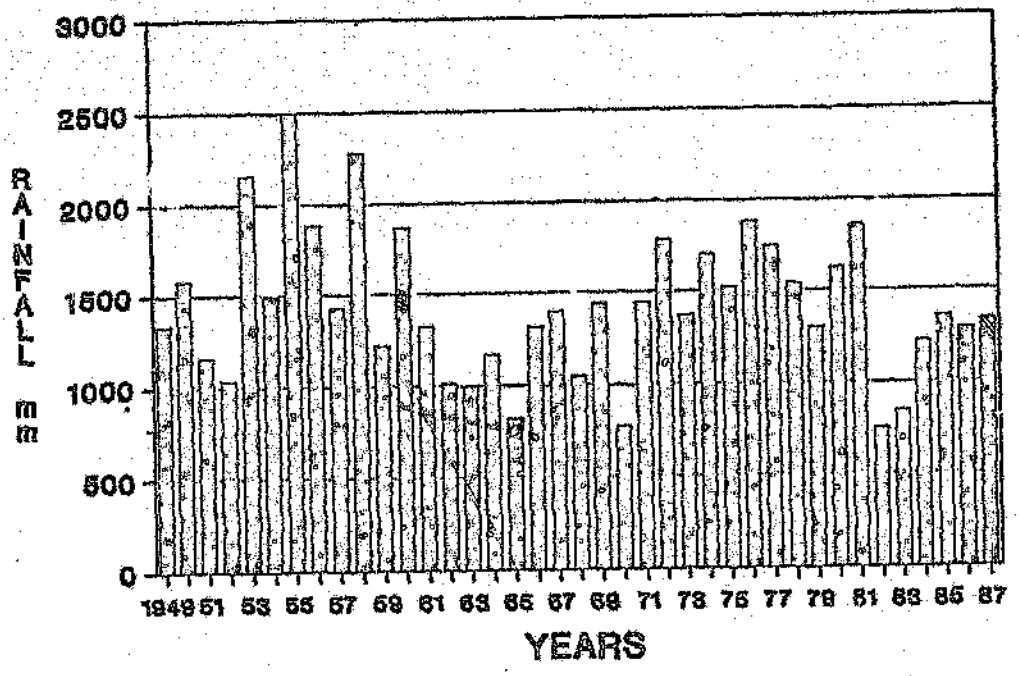

ANNUAL MEAN = 1431.98 mm

Figure 6. Annual rainfall for the period 1949 to 1987, recorded at New Agatha Weather Station.

Table 3. Monthly temperature extremes and mean daily range in degrees centigrade at New Agatha Weather Station over a 20 year period.

MONTH	TEMPERATURE MAX.	TEMPERATURE MIN.	MONTHLY MEAN OF DAILY RANGES
January	33.4	9.7	8.7
February	32.1	10.3	8.8
March	32.1	10.2	7.5
April	29.8	7.5	8.4
May	26.9	0.8	7.4
June	27.0	2.5	7.4
July	26.7	1.4	8.3
August	29.1	1.7	10.0
September	32.2	3.6	10.2
October	35.3	4.7	10.9
November	35.9	6.7	9.1
December	35.3	8.9	8.5

1.5.5 HYDROLOGY

The WWA falls within the Limpopo Olifants System of Middelton, Pitman, Midgely and Robertson (1981) and the Wolkberg mountain catchment sub-system of van der Zel (1981). The important perennial rivers flowing from the Wilderness Area are the Mohlapitze, Letsitele and Thabina Rivers.

The Mohlapitze is the major river of the three and is an important tributary of the Olifants River. It is interesting to note that originally the Great Letaba River flowed southwards down the valley today known as the Mohlapitze to join the Olifants River, formerly known as the Balula River (Whipp 1979). By means of the geomorphological phenomenon of river capture, the direction of the Great Letaba River was changed at a certain stage on the farm Georges Valley. The river now flows north east down the Letaba Valley, to again join the Olifants River but many kilometres further downstream in the Lowveld. What was left of the old river bed is now the Mohlapitze River which has its source on the farm Georges Valley.

Along the lower reaches of the Mohlapitze River are two settlements namely Ga-Mampu and Ga-Mafefe both of which are totally dependent on the Mohlapitze for water for household and agricultural use.

The Letsitele River, before its confluence with the Great Letaba River, supplies water for the Letsitele Valley, an important agricultural area, plus the large Selati and Letaba orange estates and the Nkowakowa industrial area of Gazankulu. As there are no large dams along the Letsitele River, these areas are largely dependent on water, particularly during the dry season, flowing from the Wilderness Area.

The Thabina River is the only water supply for the Ramodike Dam in Lebowa which supplies all water for a large densely populated settlement in the valley below the dam.

1.5.6 VEGETATION - GENERAL DESCRIPTION

No phytosociological study to describe and map the vegetation of the Wilderness Area has been conducted. However, the description by Scheepers (1978) of the vegetation of the Westfallia Estate, north of Tzaneen is generally applicable to the Wilderness Area.

According to Acocks (1975) the major veld types occurring within the Wilderness Area are North-eastern Mountain Sourveld (No. 8) and Lowveld Sour Bushveld (No. 9).

The Lowveld Sour Bushveld is a transitional vegetation type between the Lowveld and the higher-lying North-eastern Mountain Sourveld. Typical Lowveld Sour Bushveld occurs below 750 m (Scheepers 1978) and does not actually occur within the Wilderness Area. A transitional zone occurs between 750 m and 900 m, which is similar to the Lowveld Sour Bushveld, but with many outlying plant species from the higher rainfall areas, and a number of typical Lowveld Sour Bushveld species having dropped out. This vegetation type is comprised of short to tall woodland ranging from open to closed as defined by Edwards (1983). Typical woody species are *Parinari curatellifolia, Pterocarpus angolensis, Pterocarpus rotundifolius, Combretum molle* and *Faurea speciosa*. The herbaceous layer is largely comprised of tall, tufted generally sparse grasses such as *Panicum* spp, *Hyparrhenia* spp and *Cymbopogon* spp interspersed with shrubs.

Between roughly 900 m and 1050 m occurs a transitional North-eastern Mountain Sourveld. This zone is comprised of open shrubland or a low open woodland. Noticeable in this zone are proteas namely *Protea gaguedii* and *P caffra* and common species such as *Faurea saligna, F speciosa* and *Parinari curatellifolia*.

Above 1050 m up to the highest point of 2050 m occurs typical North-eastern Mountain Sourveld. This veld type is characterised by a mosaic of grasslands, woodlands and evergreen high forest patches. The grassland component is short and closed. Typical species are *Loudetia simplex, Themeda triandra, Monocymbium ceresiiforme, Allotropsis semi-alata, Harpochloa falx, Rendlia altera* and *Eragrostis racemosa*. Common herbs are *Clutia monticola, Helichrysum* sp, *Eriosema* sp, *Indigophera* sp and *Dicoma* sp.

Extensive indigenous forests occur on the southern and eastern slopes. On the higher-lying plateau the forests are small and in isolated patches generally situated in moist depressions or basins. The climax forest type, being evergreen high forest occurs above 1400 m in what Scheepers (1978) refers to as the upper montane forest zone. Typical species of the high forest are *Syzigium gerrardii, Xymalos monospora, Cussonia spicata, Cassipaurea gerrardii, Oxyanthus speciosus, Nuxia floribunda, Podocarpus latifolius, Prunus africana, Croton sylvaticus* and *Bersama transvaalensis*. At lower elevations between 1400 m and 1200 m the forests generally get drier and convert to semi deciduous forest (von dem Bussche 1983). Typical species are *Rhus chirindensis, Celtis africana, Bridelia micrantha, Trema orientalis, Zanthoxylem davyi* and *Mimusops zeyheri*.

Between the montane forests at 1400 m and the Transitional Lowveld Sour Bushveld at 900 m, occurs scrub forest. Typical of these forests is a very high density of woody stems with small diameter. Common species are *Acacia ataxacantha, Bauhinia galpinii, Smilax kraussiana* and *Dombeya burgessiae*.

Extensive areas of the grasslands above about 1300 m are characterised by tall open Protea savannas of *Protea roupelliae, P rubropilosa, P caffra* and *P gaguedii.*

Along the many drainage lines, streams and larger rivers a narrow belt of tall to high riverine forest occurs. Typical dominant trees are *Brsonadia micrpcephala,* which has been extensively exploited in the past, *Syzigium cordatum, Ficus* sp and *Bridelia micrantha.* The majority of plant invaders within the Wilderness Area are found along these riverine zones, with *Ceasalpinia decapetala* being prominent.

1.5.7 THE BIOTA IN RELATION TO THE GRASSLANDS

1.5.7.1 PLANTS

Only two species of exotic plants, namely *Pinus patula* and a type of *Rubus apetalus* which was not positively identified as an alien, occur in the high-lying moist grasslands. Both species occur as scattered individuals at very low densities and are easily controlled by the frequent prescribed burns applied to these grasslands. Under the present management the influence of these species on the grasslands is minimal.

1.5.7.2 MAMMALS

The mammalian fauna within the grasslands is well represented but numbers have been greatly depleted over the years through poaching and their influence correspondingly reduced. Only those species having a direct influence on the sward are discussed.

The antelope species occurring within the grasslands are self regulating and have inherently low population densities, which have also been further reduced by poaching. Their effect on the sward under such low numbers is minimal.

Large rodent communities are present in the high lying moist grasslands, but their effect on or value to the grasslands is presently unknown. This lack of knowledge, their probable importance in the food chain and the effects of frequent prescribed burning, warrants a detailed investigation. Rowe-Rowe and Lowry (1982) discuss the importance of small mammal populations as a food source and describe the fluctuations in species richness and abundance observed under a prescribed fire regime in the Natal Drakensberg.

Bushpig (*Potamochoerus porcus*) thrive in the grassland, forest patch mosaic pattern of the Wilderness Area, spending daylight hours within the forests and foraging at night frequently in the surrounding grasslands. Bushpig uproot many small areas of grassland in search of edible roots, corms etc. and appear to do considerable damage. However, according to Connell's (1978) intermediate disturbance hypothesis diversity is higher, through interspecific competition, when disturbances are intermediate on the scales of frequency, intensity and area. In this sense bushpig disturbance of the grasslands is probably more beneficial than detrimental.

Baboons (*Papio ursinus*) occur in large numbers within the Wilderness Area and frequently forage within the grasslands, turning over rocks and digging out numerous rootstocks, corms, rhizomes and lignotubers. After a large troop has moved through a section of grassland on a foraging forey their trail of upturned rocks and diggings is clearly noticeable. This disturbance, as with the bushpig, is likely to be more beneficial than detrimental.

Porcupines (*Hystrix africaeaustralis*) are also common in the grasslands of the Wilderness Area. Similar to the above two species porcupines dig for edible roots, corms etc. They do however appear to show a preference for the lignotubers of an *Argyrolobium* species. In one particular plot of 40 X 40 m 90% of the individuals of this species had been dug open and partially eaten. The disturbance by porcupine on the grassland, as with the above two species, is clearly noticeable but again probably more beneficial than detrimental, even though porcupines appear to be highly selective.

1.5.7.3 BIRDS

The grassland bird species are well represented within the Wilderness Area bu appear to have very little influence on the sward.

The only species which has any effect on the sward is the Redwing Francolin (*Francolinus levaillantii*). This bird in the Natal Drakensberg, according to Mentis (1973), feeds largely on underground storage organs of grassland geophytes and favours recently burnt areas. The overall disturbance caused by these birds on the grassland is minimal.

CHAPTER 2 PILOT STUDY

2.1 INTRODUCTION

The pilot study aimed to elicit information that would reduce subjectivity in the design of a monitoring system. The issues relevant to designing such a system are sample plot size, the number of point observations required per plot, sampling intensity or the number of plots per unit area and the level of description associated with increasing sampling effort. This chapter focuses on these issues through preliminary sampling, to provide a basis for evaluating sampling design options.

The importance of the sampling design is highlighted by the VMW in what it perceives to be the main challenges in monitoring vegetation (Mentis 1988). This is further emphasised by Gauch (1982) who states that the inherent strength or weakness of a monitoring system and the field data analysis are largely determined by the sampling design.

As this study is concerned with the detection of change in the grasslands over time, estimates of sampling variation associated with such change need to be established. Past work aimed at quantifying such variation is limited (Goodall 1952; Goodall 1953; Walker 1970; Mentis et al 1980; Mentis 1981; Mentis 1982; Everson 1985; Everson and Clarke 1988; Walker 1987). The sensitivity of a field sampling procedure depends on the precision and consistency of results yielded. For any field procedure, parameters that are sensitive to the issues of concern or expectations of the region as expressed in the objectives and goals, must be carefully selected. Additionally the chosen field technique must be cost-effective in terms of the required level of precision and scale of interest effecting sampling effort (Mentis 1988).

The field procedure used for the study was a point-based, nearest plant method for measuring proportional species composition in square plots as proposed by Mentis (1984). This approach is advocated over the originally proposed basal cover procedure of Tidmarsh and Havenga (1955). According to Mentis (1984) measuring change in basal cover is not cost-effective and yields data of low precision and accuracy. However, discarding the parameter of basal cover is open to the criticism that a change in plant density may not have a related shift in species composition. To counteract this possible error Mentis (1984) proposed the use of a maximum radius in combination with the nearest plant method beyond which bare ground would be recorded if there was no live plant within that distance, instead of the species of the nearest plant. Walker (1987) tested such a maximum radius and concluded that the use of a critical distance may have application

in the broad sense but was not worth the extra effort expended. Mentis (1984) considers this approach comparable to the traditional measure of frequency not only influenced by plant density and more cost-effective than direct estimates of plant density.

2.2 OBJECTIVE

The objective of the pilot study was to minimise subjectivity in the selection of plot size, number of points per plot and sampling intensity, through optimization and to subsequently describe how the precision of description increases with increasing sampling effort.

2.3 PLOT SIZE AND NUMBER OF POINTS PER PLOT

2.3.1 INTRODUCTION

Mentis (1984) emphasises that the purpose of plot sampling is to record the vegetation as an expression of the biotic and abiotic conditions of the site. Furthermore the vegetation-environment relationships will be confused if the sample area is very heterogeneous. Both plot shape and size effect this heterogeneity and the variance of the data collected (Mueller-Dombois and Ellenberg 1974; Greig-Smith 1983; Kershaw and Looney 1985). In the absence of guidance regarding shape of plot the traditional square plot (Kershaw and Looney 1985) was used.

If the distribution of individuals in a population are completely random then the size of the sample plot used is immaterial, as the accuracy of the estimate obtained depends only on the number of individuals counted. However, in the field individuals are invariable not randomly distributed but show some degree of clumping or contagious distribution (Greig-Smith 1983). In such cases plot size has a considerable effect on the variance of the data obtained. If the plot size is smaller than the average clump size then the variance of the data obtained will not be much greater than the mean. As plot size increases and approaches the size of the clumps, variance relative to the mean rises sharply (Greig-Smith 1983; Kershaw and Looney 1985).

A regular distribution of individuals rarely occurs in vegetation (Greig-Smith 1983; Kershaw and Looney 1985). Furthermore, a regular distribution is relative to the size of the area investigated and it is highly probable that an increase in the size of the sampling area would show a contagious distribution.

Greig-Smith (1983) advises that an investigation of the distribution of individuals is far more time consuming than direct determination of density. In cases of density determination he suggests that the safest approach would be to use the smallest plot that is practical or desirable on other grounds.

The number of point observations per sample area must be considered against the amount of sampling involved to reach a certain level of precision (Kershaw and Looney 1985; Greig-Smith 1983). A point is reached beyond which the extra information obtained from further sampling is not worth the effort expended. The aim is to determine the lowest number of point observations required to achieve a high estimate of internal association. Internal association is the similarity among replicate samples (Whittaker 1966; Gauch 1982), in this case from the same community. A similarity measure is a scalar expression of the amount that two samples differ in an importance measure (Walker 1987), which in this study is proportional species composition. The optimal number of point observations was determined by relating replicate similarity to sampling intensity as proposed by Mentis (1984). With this approach, increasing the number of points (N) per sampling area is likely to reduce sampling error and increase the similarity between replicate sets of N points.

2.3.2 PROCEDURE

Three sample plots of increasing size, namely 20 X 20 m, 30 X 30 m and 40 X 40 m, were judgementally located in a homogeneous grassland area. Each plot was sampled according to the procedure of Mentis (1984) as follows.

1) 2000 independent point observations ca. 3 m apart were systematically located within each plot using the wheel point apparatus (Tidmarsh and Havenga 1955).

2) At each consecutive point the nearest rooted living plant was recorded. All plants were, as far as possible, identified to species level (Gibbs, Russell and Smook 1980; Gibbs Russell et al 1985).

The data for each plot was analysed by the REPSIM - SAS macro of Duckworth and Walker (1988) for determining efficient sampling intensities by replicate similarity. Similarity measures have been reviewed in detail by Whittaker (1967), Odum (1971), Goodall (1978), Gauch (1982) and Greig-Smith (1983). The REPSIM program of Duckworth and Walker offers an option of two similarity measures namely community coefficient (CC) and percentage similarity (PS) and one distance measure namely Euclidian distance (ED). According to Gauch (1982) these are the three most widely used measures. CC is concerned

with presence/absence data resulting in both the common and rare species being given equal weighting. ED emphasizes the more common species and provides the most conservative estimate of replicate similarity. PS is an intermediate measure with a linear weighting of species abundance (Gauch 1982), which implies a proportional representation of items, emphasising dominants but still considering minor species. The PS measure, being intermediate seems according to Gauch (1982) and Goodall (1978) to be the best option which is the most commonly used and was therefore the option selected for this analysis.

The REPSIM - SAS macro is based on the following procedure of Mentis (1984).

1) 30 sets of N point observations were randomly selected without replacement from the total number of point observations for each plot. This was repeated for N = 10, 20, 30, ... 300.

2) For each 30 sets of N point observations, species frequency was converted to percent and then compared with every other set using Czekanowski's percentage similarity measure (PS) (Bray and Curtis 1957; Odum 1971; Gauch and Whittaker 1972) to yield a 30 X 30 similarity matrix. The measure was calculated as

$$PS_{jk} = \frac{200\sum \min(X_{ij}, Y_{ik})}{\sum (X_{ij} + Y_{ik})} \quad \ldots\ldots\ldots\ldots\ldots\ldots\ldots\ldots\ldots\ldots [3.1]$$

where PS_{jk} = similarity between samples j and k

X_{ij}, Y_{ij} = the abundance of species in samples j and k respectively.

3) For each 30 X 30 similarity matrix the replicate similarity (RS) was calculated for each group (N) using

$$RS = \frac{(\sum PS_{ij} - (100n))}{n(n-1)} \quad \ldots\ldots\ldots\ldots\ldots\ldots\ldots\ldots\ldots\ldots [3.2]$$

where RS = replicate similarity

PS_{ij} = measure of similarity between samples i and j

n = number of replicate samples.

The output from the REPSIM - SAS macro was further analysed by the following procedure, which conforms to that described by Mentis (1984).

1) The replicate similarity data for each group (N) was modelled using non-linear functions. The descriptive quality of a model depends on the proportion of variance accounted for by the dependent variable. According to Greig-Smith (1983) this is best achieved through a step-wise manner where further independent variables are added to the regression equation until the required proportion of variance has been accounted for. For this reason the following two, three and four parameter models were tested.

$$\overline{PS} = \frac{\beta_0}{\sqrt{[1+\beta_1]}} \quad \ldots\ldots\ldots\ldots\ldots\ldots\ldots\ldots\ldots\ldots [3.3]$$

Beule function (Hunt 1982)

$$\overline{PS} = \beta_0\left(\frac{N}{N+\beta_1}\right) \quad \ldots\ldots\ldots\ldots\ldots\ldots\ldots\ldots\ldots\ldots [3.4]$$

Michaelis Menton Function (Hall and Day 1977)

$$\overline{PS} = \beta_0(1-\exp-\beta_1 N) \quad \ldots\ldots\ldots\ldots\ldots\ldots\ldots\ldots [3.5]$$

negative exponential function (Hunt 1982)

$$\overline{PS} = \beta_0 * (\beta_1 \exp \beta_2 N) \quad \ldots\ldots\ldots\ldots\ldots\ldots\ldots\ldots [3.6]$$

exponential function (Hunt 1982)

$$\overline{PS} = \beta_0(1-\exp-\beta_1 N)^{[1-\beta_2]} \quad \ldots\ldots\ldots\ldots\ldots\ldots\ldots\ldots [3.7]$$

Chapman-Richards function (Walker 1987; Duckworth and Walker 1988)

$$\overline{PS} = \beta_0(1-\exp(\beta_1-\beta_2 N)^{\frac{\beta-1}{\beta_3}} \quad \ldots\ldots\ldots\ldots\ldots\ldots\ldots\ldots [3.8]$$

Richards function (Richards 1959)

where β_0 describes the upper asymptote to $\overline{PS}$

β_1 = the rate of change along the curve

β_2 = the location of the inflection point

β_3 = the variable point of inflection, which describes the degree of lag in the curve

$\overline{PS}$ = the measure of replicate similarity (equation 3.2) using percent similarity (equation 3.1) at group size N

N = the number of point observations.

2) The number of point observations was calculated for 90, 95 and 99% of the estimated internal association (β_0) described by the asymptote of each curve, using the inverse of the non-linear regression models as follows

$$N = -\frac{\beta_1}{\left(1-\left(\frac{\beta_0}{\overline{PS}}\right)^{\beta_2}\right)} \quad \ldots\ldots\ldots\ldots\ldots\ldots\ldots\ldots [3.9]$$

inverse Baule function

$$N = \frac{-\beta_1 Y}{\overline{PS}-\beta_0} \quad \ldots\ldots\ldots\ldots\ldots\ldots\ldots\ldots [3.10]$$

inverse Michaelis Menton function

$$N = \frac{\ln 1-\left(\frac{\overline{PS}}{\beta_0}\right)}{-\beta_1} \quad \ldots\ldots\ldots\ldots\ldots\ldots\ldots\ldots [3.11]$$

inverse negative exponential function

$$N = \frac{\ln\left(\frac{-\beta_0+\overline{PS}}{\beta_1}\right)}{\beta_2} \quad \ldots\ldots\ldots\ldots\ldots\ldots\ldots\ldots [3.12]$$

inverse exponential function

$$N = \frac{\ln\left(\left(\frac{1-\overline{PS}}{\beta_0}\right)^{(1-\beta_2)}\right)}{-\beta_1} \quad \ldots\ldots\ldots\ldots\ldots\ldots\ldots\ldots [3.13]$$

inverse Chapman-Richards function

$$N = \frac{\ln\left(1-\left(\frac{\overline{PS}}{\beta_0}\right)^{-\beta_2}\right)-\beta_1}{-\beta_0} \quad \ldots\ldots\ldots\ldots\ldots\ldots\ldots\ldots [3.14]$$

inverse Richards function

where N = optimal number of point observations

$\beta_0, \beta_1, \beta_2$ and β_3 are described under point 4

$\overline{PS}$ = 90, 95 or 99% of the asymptotic value β_0.

3) The relative superiority of the non-linear models used to describe the data was judged on R^2, the homoscedasticity and randomness of the residuals, parsimony and the degree of extrapolation of N beyond the maximum specified for the model.

R^2 is the coefficient of determination and expresses the proportion of the total variability in Y attributable to the dependence of Y on all the X_i as defined by the regression model fit to the data (Zar 1974).

The residuals indicate the suitability of the non-linear regression models used to describe the data. The residuals $(Y_i-\hat{Y})$ may be plotted as a function of their corresponding X's. If the model used is correct, the requirements of homoscedasticity should be satisfied with the residuals distributed evenly above and below zero (Snedecor and Cochran 1967; Zar 1974). If heteroscedasticity, which is increasing variability in Y with increasing values of X or some other type of pattern exists then the model is either not sufficiently describing the data or is incorrect (figure 7). The interpretation of the residual plot is facilitated by the runs test (Zar 1974) for randomness of the residuals based on the number of runs above and below zero. A significant test ($P<0.05$) indicates that the residuals are not randomly distributed.

The rule of parsimony dictates that no more causes should be assumed than account for the effect. For example a four parameter model may fit the data marginally better than a three parameter model, but runs the risk of describing error and in so doing, violates the rule of parsimony.

2.3.3 RESULTS

Table 4 displays the percentage similarity ($\overline{PS}$) and the minimum number of points N obtained from 90, 95 and 99% of the asymptotic value (β_0), for each model per plot.

In the 20 X 20 m plot, a total of 44 species were recorded. All the models tested, except for the Richards function, do not satisfy the requirements of homoscedasticity, evident from the pattern in the residual plot and a significant runs test ($P < 0.05$). The Richards model adequately describes the data, but predicts a value for N at 99% of the asymptotic value (β_0) beyond the maximum specified.

In the 30 X 30 m plot, 55 species were recorded. All the models, except in this case for the Chapman-Richards and Richards models, did not satisfactorily describe the data, as their is obvious pattern in the residual plot confirmed by significant runs tests ($P < 0.05$). Both the Chapman-Richards and Richards models satisfy the

requirements of homoscedasticity however, both models predict values of N at the 99% level beyond the maximum specified, but only marginally so by the Chapman-Richards model.

57 species were recorded in the 40 X 40 m plot. Only the negative exponential model does not satisfy the requirements of homoscedasticity. The Gaule and Michaelis Menton models yield estimates of N well beyond the maximum specified. The exponential, Chapman-Richards and Richards models give a good fit to the data. The four parameter Richards model has the highest R^2 value of these three, but runs the risk of violating the rule of parsimony, as both the three parameter exponential and Chapman-Richards models sufficiently describe the data.

Table 4. Optimisation of N, the number of points, using the inverse of the six fitted non-linear regression functions for each plot.

	FITTED VALUES					ESTIMATED VALUES AT 90, 95 AND 99% OF THE ASYMPTOTIC VALUES						RUNS TEST	RESIDUAL PLOT see Fig 7
						90%		95%		99%			
FUNCTION	B0	B1	B2	B3	R^2	PS	N	PS	N	PS	N	Prob.	PATTERN
20 X 20 m Plot (species recorded = 44)													
BA	89.17	36.25			0.994	80.3	155	84.7	336	88.3	1765	0.001	YES
MM	87.00	12.00			0.991	78.3	115	82.7	245	86.1	1275	0.001	YES
- EXP	86.51	0.05			0.989	[illegible]	48	76.5	53	79.7	97	0.001	YES
EXP	83.39	-45.46	-0.02		0.975	[illegible]	86	79.1	122	82.5	284	0.001	YES
C-R	84.77	0.01	-2.37		0.991	76.3	101	80.5	154	83.9	228	0.001	YES
RI	86.74	0.05	0.01	-5.20	0.996	78.1	125	82.4	235	85.9	414	0.06	ND
30 X 30 m Plot (species recorded = 53)													
BA	89.87	52.82			0.995	80.0	224	84.4	407	88.0	2532	0.04	YES
MM	85.82	17.45			0.977	77.1	157	81.3	332	84.8	1720	0.02	YES
- EXP	77.95	0.04			0.954	78.1	82	74.0	81	77.2	125	0.001	YES
EXP	81.37	-48.17	-0.02		0.981	73.2	108	77.3	150	80.6	248	0.005	YES
C-R	83.52	0.01	-2.07		0.986	75.2	133	79.3	158	82.7	332	0.15	ND
RI	85.93	0.04	0.01	-4.33	0.987	77.3	157	81.6	235	85.1	503	1.00	ND
40 X 40 m Plot (species recorded = 57)													
BA	93.39	51.04			0.995	84.1	210	89.7	472	92.5	2514	1.00	ND
MM	90.47	17.61			0.993	74.1	150	78.2	334	81.5	1743	1.00	ND
- EXP	82.28	0.04			0.931	81.4	62	85.9	81	89.6	124	0.02	YES
EXP	83.66	-59.83	-0.02		0.973	75.5	83	79.7	112	83.0	188	0.33	ND
C-R	84.60	0.02	-1.15		0.984	76.3	93	80.5	132	83.9	224	0.90	ND
RI	86.77	0.08	0.01	-4.86	0.994	79.0	115	82.4	177	85.9	334	0.95	ND

BA = Beule function
MM = Michaelis Menton function
- EXP = Negative Exponential function
EXP = Exponential function
C-R = Chapman Richards function
RI = Richards function

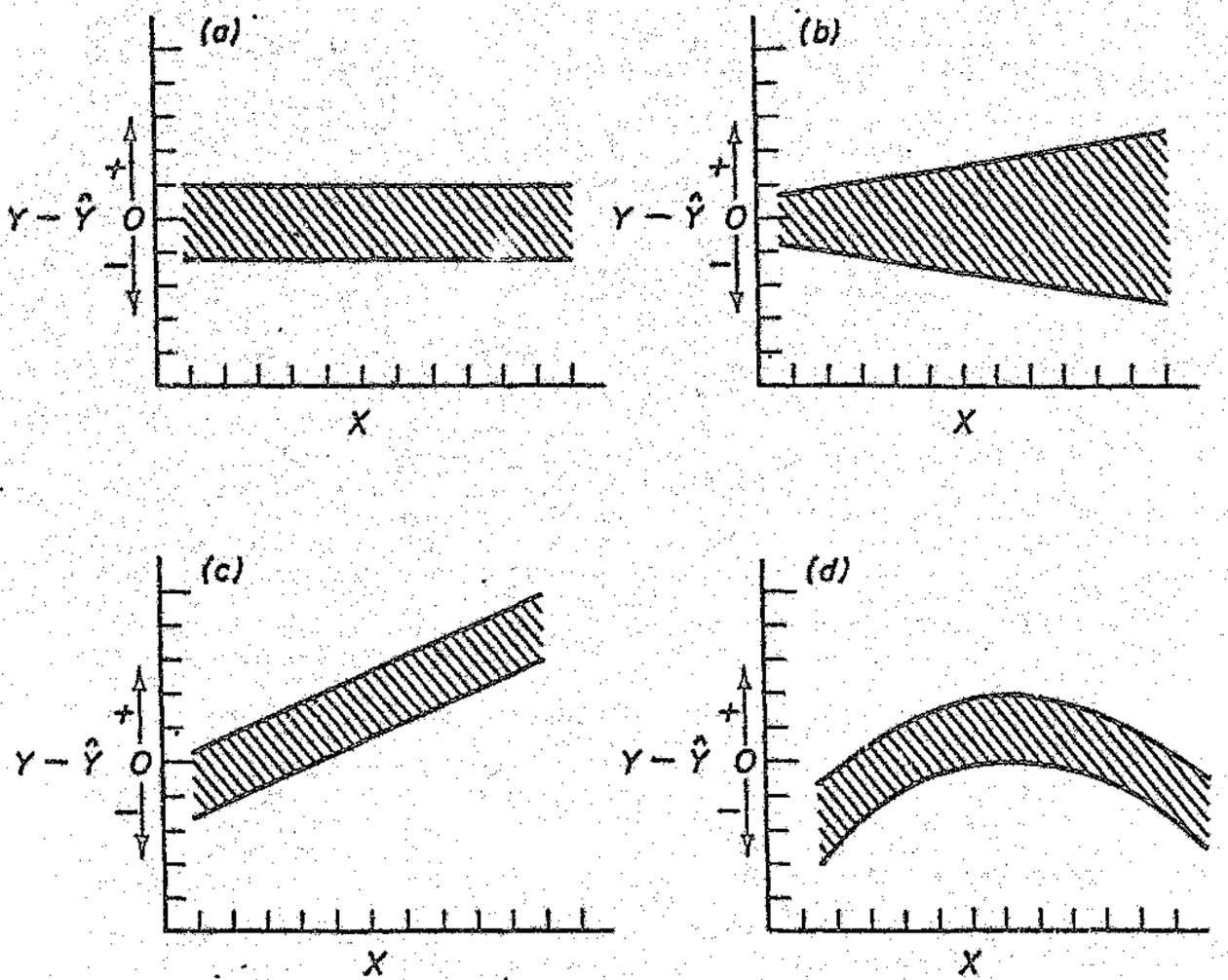

Figure 7. Types of residual plot pattern, (a) homoscedasticity (b) heteroscedasticity (c) calculation error (d) incorrect model to accurately describe the data (Zar 1974).

2.3.4 DISCUSSION

Of the models tested, only two models, the exponential and Chapman-Richards from the 40 X 40 m plot, satisfy the requirements of (1) homoscedasticity and randomness of residuals, (2) prediction of N within the maximum of 300 specified and (3) the constraints of the rule of parsimony. Additionally the internal association (PS) estimated by these two models is high, 83.9% and 84.8% respectively. As both models adequately fit the data, and neither has any obvious advantages over the other, the mean of the minimum number of point observations (N) predicted by the two models at the three cutoff levels (90, 95 and 99%), is considered to retrieve a reliable estimate of internal association. For this study, the 99% cutoff level is proposed. At this level a high percentage of replicate similarity (84.4%) is retrieved through a minimum of 200 point observations, taken from the mean of the two models. 200 points per plot is considered to be a practical cost-efficient intensity for application in a detailed monitoring study.

The three different plot sizes were tested without replication to observe the effects, if any, on the results of the point intensity data obtained. Only the data from the 40 X 40 m plot was satisfactorily modelled. This is possibly due to the greater independence of points when using the wheel point apparatus in a larger plot. Additionally a plot size of 40 X 40 m is considered to be of a practical size for the terrain of the wilderness area, and therefore accepted for the purpose of this study.

The lack of replication of the different sizes of plots could be seen as a major weakness in the procedure, thereby strongly reducing the confidence attached to any inferences drawn from the results. Corvello (1970) suggests that the selection of plot size adds considerably to the subjective element involved in the choice of a sampling procedure, which in turn has a considerable effect on the variance of the data obtained. However, this phase of the study was aimed at simply providing a basis to evaluate sampling design options with a view to reducing subjectivity in the final choice. As such subjectivity cannot be totally eliminated, Kershaw and Looney (1985) state that the choice of plot size is arbitrary. In this context the lack of replication is considered not to have detracted from the results. Nevertheless, these results should be used with caution outside the WWA, keeping in mind the importance of developing a sampling design under the inherent variability of the vegetation to be studied.

The degree of internal association (PS) retrieved by the two models (84.4%) agrees with figures reported in literature. Greig-Smith (1983) indicates that the similarity for replicate samples drawn from the same population will be somewhat less than 100%. Replicates of foliage insect samples by Whittaker (1952) ranged from 50% to 80%. Bray and

Curtis (1937) obtained a mean value of 82% from replicate vegetation samples. Whittaker (1967) determined a range from 60% to 94% for vegetation transects. Finally the number of 200 point observations per plot agrees with the recommendations of Foran (1976), Foran et al (1976), Hardy (1986) and Walker (1987).

Having determined a practical sample plot size and the minimum number of point observations per plot that retrieve a high level of description, it is necessary to establish a cost-effective sampling intensity or the minimum number of plots per site, that yield a high level of description, to complete the full sampling design. This aspect is investigated under the following section of the study.

2.3.5 CONCLUSION

The objective of this section of the study was to reduce subjectivity in the choice of sample plot size , and the number of point observations per plot, using the wheel point apparatus.

Three plot sizes (20 X 20m, 30 X 30m, 40 X 40m) were tested without replication. The 40 X 40 m plot was considered to yield the best results and accepted for this study.

A replicate similarity approach was followed, to determine the minimum number of point observations per plot that retrieve an adequately high level of description. The plot data was described by six non-linear regression models, of which the exponential and Chapman-Richards models were judged to be superior. Both models gave a high level of description, retrieving a mean of 84.4% of the internal association. From these two models a mean of 200 point observations per plot was accepted.

2.4 SAMPLING INTENSITY

2.4.1 INTRODUCTION

This phase of the study is concerned with first, the minimum number of plots required to achieve a known level of description and second, how the level of description increases with increasing sampling effort. The data was analysed by two different procedures, namely a Replicate Similarity and a Replicate Ordination approach. Green (1979) suggests that the use of different procedures improves the robustness of inferences drawn from the results. Furthermore the cost-effectiveness of the procedures can be compared.

According to Gauch (1982) sampling must be appropriate in intensity and breadth to support research conclusions. Similarly, sampling should not consume large amounts of time and resources beyond those required for the research objectives. As it is impossible to make a general rule regarding sampling intensity, each case needs to be decided independently and considered against the amount of sampling required to reach a certain level of accuracy (Kershaw and Looney 1985).

Two relatively objective methods for determining sampling intensity have been developed (Gauch 1982). The first is the species-area method for determining an efficient sampling intensity (Cain and Castro 1959; Daubenmire 1968; Shimwell 1971; Kershaw 1973; Meuller-Dombois and Ellenberg 1974; Orloci 1978; Greig-Smith 1983). The second method is based on the computation of standard errors of the mean for species abundances measured in a sequence of sample areas (Daubenmire 1968; Meuller-Dombois and Ellenberg 1974; Hume and Day 1974; Greig-Smith 1983).

Much work has been done on community [illegible] 1965; Pielou 1966, 1969; van der Maarl and Leeuwenmire 1968; Sullivan and Nixon 1971; Whittaker 1972), but investigations explain the methodology to determine sample size. Hume and Day (1974) identify this lack of firm guidelines for determining sampling intensity and propose a procedure for establishing an efficient sample size to achieve a reliable representation of the vegetational variation expressible as beta diversity. Mentis (1984) proposes a similar approach, based on proportional species composition.

2.4.2 PROCEDURE

The sampling procedure proposed by Mentis (1984) was closely followed.

1) A homogeneous site of 10 ha was judgementally selected.

2) 50 plots of 40 X 40 m were randomly located in the 10 ha site. If a plot fell into an atypical portion of the site, it was relocated to the nearest typical area.

3) The nearest rooted living plant to each of 200 consecutive points using the wheel point apparatus (Tidmarsh and Havenga 1955) was recorded in each plot. Plants were as far as possible identified to species level (Gibbs-Russel and Smook 1980; Gibbs-Russel et al 1985).

2.4.2.2 REPLICATE ORDINATION APPROACH

The second analysis procedure was based on a replicate ordination approach (Mentis 1984) as follows.

1) For the data from each site a discrete uniform random number generator (STSC, Inc 1986) was used to select 20 sets of J sample plots without replacement. This was repeated for J = 10, 15, 20, ------ 35.

2) Each set of J samples drawn was ordinated using DECORANA (Hill 1979a).

3) The frequency distribution of samples along the main axis extracted by each ordination was plotted in class widths of 0.25 SD (standard deviation) units.

4) The frequency distribution of each of the 20 sets of J sample plots for each site was compared with every other using the Kolmogorov-Smirnov goodness of fit test for ordinal scale data (Zar 1974) at both the 95 and 99% confidence level, to yield two 20 X 20 matrices of Kolmogorov-Smirnov (D) values for each set.

5) The percent of non-significant D values at both the 95 and 99% confidence levels, was determined for the off diagonal terms of each matrix.

6) The percentage of non-significant values at each confidence level was modelled using the exponential function (Hunt 1982)

$$J=\beta_0+(\beta_1-\exp\beta_2 N) \quad \ldots\ldots\ldots\

This data was analysed by the REPSIM - SAS macro procedure of Duckworth and Walker (1988), described in section 2.3.2 (page 28) to yield the replicate similarity (RS) of each set of N plots which was further analysed as follows.

1) The replicate similarity data for each set of N plots was modelled by the six non-linear regression models, as described under section 2.3.2 (page 30).

2) The minimum number of plots required, was calculated at 90, 95 and 99% of the estimated internal association (β_e) described by the asymptote of each curve, using the inverse of the non-linear models as described under section 2.3.2 (page 31).

3) The relative superiority of the non-linear models used to describe the data was again judged on R^2, the homoscedasticity and randomness of residuals, the constraints of the rule of parsimony and the degree of extrapolation of N beyond the maximum specified for the model.

4) The number of sample plots required per site, calculated from step 2 above, were modelled by the negative exponential, Michaelis Menton and exponential non-linear models.

5) The inverse of the model judged to best describe the data in step 4 was determined. This inverse formed the final model from which to calculate the minimum number of plots required per unit area to be sampled. The inverse of a non-linear model is obtained by solving for N (the number of plots) as follows,

non-linear model $$Y = A\left(\frac{N}{N+B}\right)$$

inverse $$N = \frac{-BY}{Y-A}$$

6) The percentage similarity (PS) values predicted by the model which gave the most satisfactory fit to the replicate similarity data per site calculated, in step 2, were extracted and described using a multiplicative linear regression model. From this model the level of description, in terms of replicate similarity retrieved by the number of plots required per unit area to be sampled, can be calculated.

7) The number of sample plots (N) for each of the three sites was calculated for 90, 95 and 99% of the asymptotic value using the inverse of the non-linear regression models as follows.

Inverse Exponential function

$$N = \ln \frac{\left(-\beta_0 + \frac{J}{\beta_1}\right)}{\beta_0} \quad \ldots\ldots\ldots\ldots\ldots\ldots\ldots\ldots\ldots\ldots [3.17]$$

and the inverse Chapman-Richards function.

$$N = \frac{\ln\left(\left(1 - \frac{J}{\beta_0}\right)^{[1-\beta_0]}\right)}{-\beta_1} \quad \ldots\ldots\ldots\ldots\ldots\ldots\ldots\ldots\ldots\ldots [3.18]$$

where N = optimal number of sample plots
β_0 describes the upper asymptote
β_1 = the rate of change along the curve
β_2 = the location of the inflection point
J = 90, 95 or 99% of the asymptotic value (β_0)

8) The number of sample plots per site calculated in step 7 above by the model judged to best describe the data, were extracted and modelled using the negative exponential, Michaelis Menton and the exponential non-linear regression models.

9) The inverse of the model (step 8) judged to best describe the number of plots per site was resolved, from which the minimum number of plots required per unit area to be sampled can be calculated.

10) The percentage non-significant values (D) associated with the minimum number of sample plots per site calculated in step 7 by the model judged to best describe the data, were extracted and modelled by the negative exponential, Michaelis Menton and exponential non-linear regression models.

11) The inverse of the model (step 10) that best describes the percentage non-significant values was resolved, from which the level of description associated with the required number of sample plots per unit area (step 9) can be calculated.

area displayed in table 10. From this model, the function to calculate the level of description associated with the minimum number of plots per sample unit, was derived (table 10).

Table 7. Number of plots per site at 90, 95 and 99% of the asymptotic value calculated from the exponential model used to describe the replicate similarity data of each site.

	NUMBER OF PLOTS (N) AT 90, 95 AND 99% OF THE ASYMPTOTIC VALUES			
SITE	90%	95%	99%	$\hat{P}S$
10	8	17	37	97.830
25	10	18	36	97.204
100	12	20	40	96.648
				$\bar{X}$=97.228

4) The size of the site was increased to 25 ha to include greater vegetational diversity and steps 2 and 3 above were repeated.

5) The size of the site was further increased to 100 ha, again to include greater vegetational variation and steps 2 and 3 above were repeated.

2.4.2.1 REPLICATE SIMILARITY APPROACH

To test for precision, which can be described as the degree of spread of results when the same method is repeatedly applied (Gauch 1982), different samples from the total data set for each site were selected by varying the number of sets and/or the number of plots (N) per set as follows.

1) 10 ha site

   a) 5 sets of N plots were randomly selected without replacement from the total number of plots. This was repeated for N = 5, 10, 15 ------ 40.

   b) 10 sets of N plots were randomly selected without replacement from the total number of plots. This was repeated for N = 5, 10, 15, 20 ------ 40.

   c) 10 sets of N plots were randomly selected without replacement from the total number of plots. This was repeated for N = 3, 6, 9, 12 ------ 39.

2) 25 ha site

   a) 5 sets of N plots were randomly selected without replacement from the total number of plots. This was repeated for N = 5, 10, 15 ------ 40.

   b) 10 sets of N plots were randomly selected without replacement from the total number of plots. This was repeated for N = 5, 10, 15, ------ 40.

3) 100 ha site

   a) 10 sets of N plots were randomly selected without replacement from the total number of plots. This was repeated for N = 3, 6, 9, ------ 39.

   b) 10 sets of N plots were randomly selected without replacement from the total number of plots. This was repeated for N = 5, 10, 15, ------ 40.

2.4.3 RESULTS

2.4.3.1 REPLICATE SIMILARITY APPROACH

The percentage similarity results from the REPSIM-SAS macro for each data set per site are displayed in table 5. Each set of data was modelled by the six non-linear regression models as displayed in table 6.

The two parameter models did not sufficiently describe the data, evident from the heteroscedasticity and non-randomness of the residuals and extrapolation of N at the 99% confidence level, well beyond the maximum specified.

The three parameter models satisfy the requirements of homoscedasticity of the residuals, and have a high descriptive quality evident from the consistently high R^2 values. The exponential model displays greater precision than the Chapman-Richards model, with a smaller spread of N over the data sets per site. Additionally the exponential model predicts values of N at the 90% confidence level within the maximum specified as opposed to the Chapman-Richards model.

The four parameter Richards model gives the best fit to the data and displays a high level of precision. However, the predicted values of N at the 99% confidence level are greater than the maximum specified. Additionally four parameters are at risk of violating the rule of parsimony, particularly when a three parameter model adequately describes the data.

The exponential model is judged to be superior, and the highest number of plots (N) per site and the associated level of description (PS) predicted by this model were extracted (table 7) for further analysis.

The results of the non-linear regression models fitted to this data are displayed in table 8. All three models adequately describe the data, but the Michaelis Menton model was judged to be superior due to the higher R^2 value and the constraints of the rule of parsimony.

The results of the Michaelis Menton model, describing the number of plots per hectare, are graphically displayed in figure 8. The inverse of this model yields the functions (table 5) for calculating the number of plots required per unit area to be sampled.

The percentage similarity (PS) values associated with the number of plots per site (table 7), modelled using the multiplicative linear regression model (STSC, Inc. 1988), which gave a good fit to the data,

Table 5 Results from the REPSIM-SAS macro for determining plot intensity based on percentage similarity.

10 HA SITE							
SET 1		SET 2		SET 3			
Repsim options min=5 max=40 incr=5 reps=5		Repsim options min=5 max=40 incr=5 reps=10		Repsim options min=3 max=39 incr=5 reps=5			
J	PS	J	PS	J	PS	J	PS
5	84.9600	5	84.4156	3	82.0704	27	95.3486
10	89.4100	10	90.1489	6	85.5037	30	95.7163
15	92.5333	15	92.3778	9	88.7630	33	96.8128
20	93.8075	20	93.8956	12	91.4380	36	96.7318
25	95.2260	25	94.7404	15	91.3074	39	97.3538
30	96.0817	30	95.6811	18	93.8957		
35	97.1357	35	96.8597	21	93.7460		
40	97.[illegible]	40	97.5057	24	94.6759		

A SITE				100 HA SITE			
SET 1		SET 2		SET 1		SET 2	
Repsim options min=5 max=40 incr=5 reps=5		Repsim options min=5 max=40 incr=5 reps=10		Repsim options min=3 max=39 incr=3 reps=10		Repsim options min=5 max=40 incr=5 reps=10	
J	PS	J	PS	J	PS	J	PS
5	79.9100	5	81.1356	3	74.5444	5	80.1933
10	91.0200	10	87.8744	6	83.5963	10	85.7656
15	89.8300	15	90.9022	9	86.2568	15	89.3281
20	93.2725	20	92.5444	121	86.6383	20	91.5478
25	94.1720	25	94.4707	15	88.2667	25	92.4093
30	95.8650	30	95.1985	18	89.9827	30	93.8381
35	96.2757	35	96.0987	21	91.0661	35	95.2444
40	96.6587	40	97.0883	24	91.8708	40	96.0106
				27	93.7638		
				30	94.2411		
				33	94.3451		
				36	95.8670		
				39	96.2547		

Table 6. Optimization, based on replicate similarity, of the number of plots per site (N), using the inverse of the fitted non linear regression models, at 90, 95 and 99% of the asymptotic value.

	FITTED VALUES					ESTIMATED VALUES AT 90, 95 AND 99% OF THE ASYMPTOTIC VALUES						RUNS TEST	RESIDUAL PLOT see Fig 7
						90%		95%		99%			
FUNCTION	00	01	02	03	R^2	PS	N	PS	N	PS	N	Prob.	PATTERN
10 ha site - SET 1 (reps=5 min=5 max=40 incr=5)													
BA	90.95	1.95			0.969	89.03	8	94.01	10	97.97	98	0.021	YES
MM	90.64	0.88			0.953	88.77	8	93.71	17	97.66	67	0.021	YES
- EXP	94.03	0.43			0.710	85.35	5	90.09	7	93.86	11	0.017	YES
EXP	97.03	-19.54	-0.08		0.988	88.14	8	93.03	17	96.95	37	0.702	NO
C-R	98.70	0.04	-9.59		0.980	89.73	10	94.71	23	98.70	60	0.09	NO
RI	99.63	-0.09	0.05	-0.45	0.989	89.14	9	94.09	20	98.05	51	0.09	NO
10 ha site - SET 2 (reps=10 min=5 max=40 incr=5)													
BA	90.90	1.95			0.979	89.93	8	93.94	10	97.09	96	0.021	YES
MM	90.58	0.88			0.975	88.72	8	93.65	17	97.59	67	0.017	YES
- EXP	94.00	0.43			0.765	85.32	5	90.06	7	93.85	11	0.017	YES
EXP	97.50	-19.05	-0.09		0.985	87.75	8	92.63	18	96.53	34	0.702	NO
C-R	98.98	0.04	-9.45		0.993	89.10	9	94.04	20	98.01	53	0.702	NO
RI	99.20	0.07	0.03	-14.27	0.995	89.27	9	94.23	21	98.20	59	0.252	NO
10 ha site - SET 3 (reps=10 min=3 max=39 incr=3)													
BA	97.71	1.51			0.920	87.94	6	92.82	14	96.73	74	0.021	YES
MM	97.34	0.67			0.905	87.61	6	92.47	13	96.37	66	0.021	YES
- EXP	93.02	0.63			0.560	84.44	4	89.13	5	92.88	7	0.017	YES
EXP	97.60	-19.98	-0.09		0.980	87.84	8	92.72	18	96.62	35	0.902	NO
C-R	101.2	0.92	-11.40		0.989	91.09	13	96.15	31	100.2	86	0.076	NO
RI	98.31	-0.09	0.04	-9.79	0.980	89.30	10	94.35	22	98.32	56	0.902	NO

BA = Baule function
MM = Michaelis Menton function
- EXP = Negative Exponential function
EXP = Exponential function
C-R = Chapman Richards function
RI = Richards function

Table 6 continued.

	FITTED VALUES					ESTIMATED VALUES AT 90, 95 AND 99% OF THE ASYMPTOTIC VALUES						RUNS TEST	RESIDUAL PLOT see Fig 7
						90%		95%		99%			
FUNCTION	B0	B1	B2	B3	R^2	PS	N	PS	N	PS	N	Prob.	PATTERN
25 ha site - SET 1 (reps=5 min=5 max=40 incr=5)													
BA	89.56	2.64			0.984	89.61	11	94.50	24	98.57	130	0.702	NO
MM	90.11	1.17			0.949	89.20	10	94.16	22	98.12	116	0.702	NO
- EXP	94.36	0.37			0.855	84.92	6	89.64	8	93.42	13	0.017	YES
EXP	96.07	-29.9	-0.13		0.927	86.46	9	91.26	14	95.11	29	0.702	NO
C-R	96.66	0.09	-4.50		0.937	86.99	9	91.83	15	95.70	32	0.702	NO
RI	99.02	0.12	0.03	-10.5	0.959	89.93	10	93.07	22	97.03	66	0.702	NO
25 ha site - SET 2 (reps=10 min=5 max=40 incr=5)													
BA	90.25	2.61			0.985	84.05	7	94.29	24	98.26	125	0.95	YES
MM	93.76	1.15			0.980	88.69	10	93.02	22	97.77	113	0.05	YES
- EXP	93.69	0.36			0.781	84.69	6	89.30	8	93.66	12	0.017	YES
EXP	97.20	-24.7	-0.10		0.993	87.48	10	92.34	18	96.23	36	0.702	NO
C-R	98.72	0.05	-6.95		0.997	88.05	12	93.78	23	97.73	53	0.702	NO
RI	98.72	0.03	0.03	-11.05	0.998	89.75	13	94.74	27	98.72	69	0.702	NO
100 ha site - SET 1 (reps=10 min=3 max=39 incr=3)													
BA	96.89	2.24			0.943	87.19	10	92.03	21	93.68	34	0.006	YES
MM	90.25	0.95			0.931	86.63	9	91.44	18	95.29	94	0.006	YES
- EXP	91.64	0.51			0.888	82.49	5	87.06	6	90.33	9	0.001	YES
EXP	96.23	-25.2	-0.00		0.956	86.61	11	91.42	20	95.27	39	0.554	NO
C-R	100.7	0.03	-0.25		0.975	90.64	19	95.68	38	99.70	95	0.995	NO
RI	101.7	0.03	0.02	-11.03	0.982	91.52	21	96.69	40	100.8	134	0.995	NO
100 ha site - SET 2 (reps=10 min=5 max=40 incr=5)													
BA	96.09	2.67			0.971	88.16	11	93.08	25	96.99	131	0.021	YES
MM	97.45	1.16			0.982	87.71	10	92.59	22	96.49	115	0.021	YES
- EXP	92.65	0.34			0.737	83.38	6	88.02	8	91.73	12	0.017	YES
EXP	96.65	-24.0	-0.00		0.982	86.69	12	91.72	20	95.56	49	0.702	NO
C-R	99.23	0.03	-7.67		0.995	89.31	15	94.27	31	98.24	75	0.702	NO
RI	100.8	0.03	0.02	-11.03	0.998	90.73	18	95.77	39	99.81	104	0.702	NO

BA = Davie function
MM = Michaelis Menton function
- EXP = Negative Exponential function
EXP = Exponential function
C-R = Chapman Richards function
RI = Richards function

Table 8 Non-linear regression models fitted to the number of plots per site calculated from the Exponential model used to describe the replicate similarity (PS) data.

Model	β_0	β_1	β_2	R^2	Residual Plot Homoscedasticity
90% of asymptotic value					
- Exp	11.541	0.108		0.988	YES
M M	12.621	6.981		0.999	YES
Exp	11.544	-11.47	-0.107	0.988	YES
95 % of asymptotic value					
- Exp	19.091	0.216		0.[illegible]	YES
M M	20.036	1.954		0.99[illegible]	YES
Exp	19.090	-19.08	-0.217	0.992	YES
99% of asymptotic value					
- Exp	39.558	0.268		0.995	YES
M M	39.826	1.183		0.998	YES
Exp	38.556	-38.55	-0.269	0.995	YES

- Exp = Negative Exponential Function
M M = Michaelis Menton Function
Exp = Exponential Function

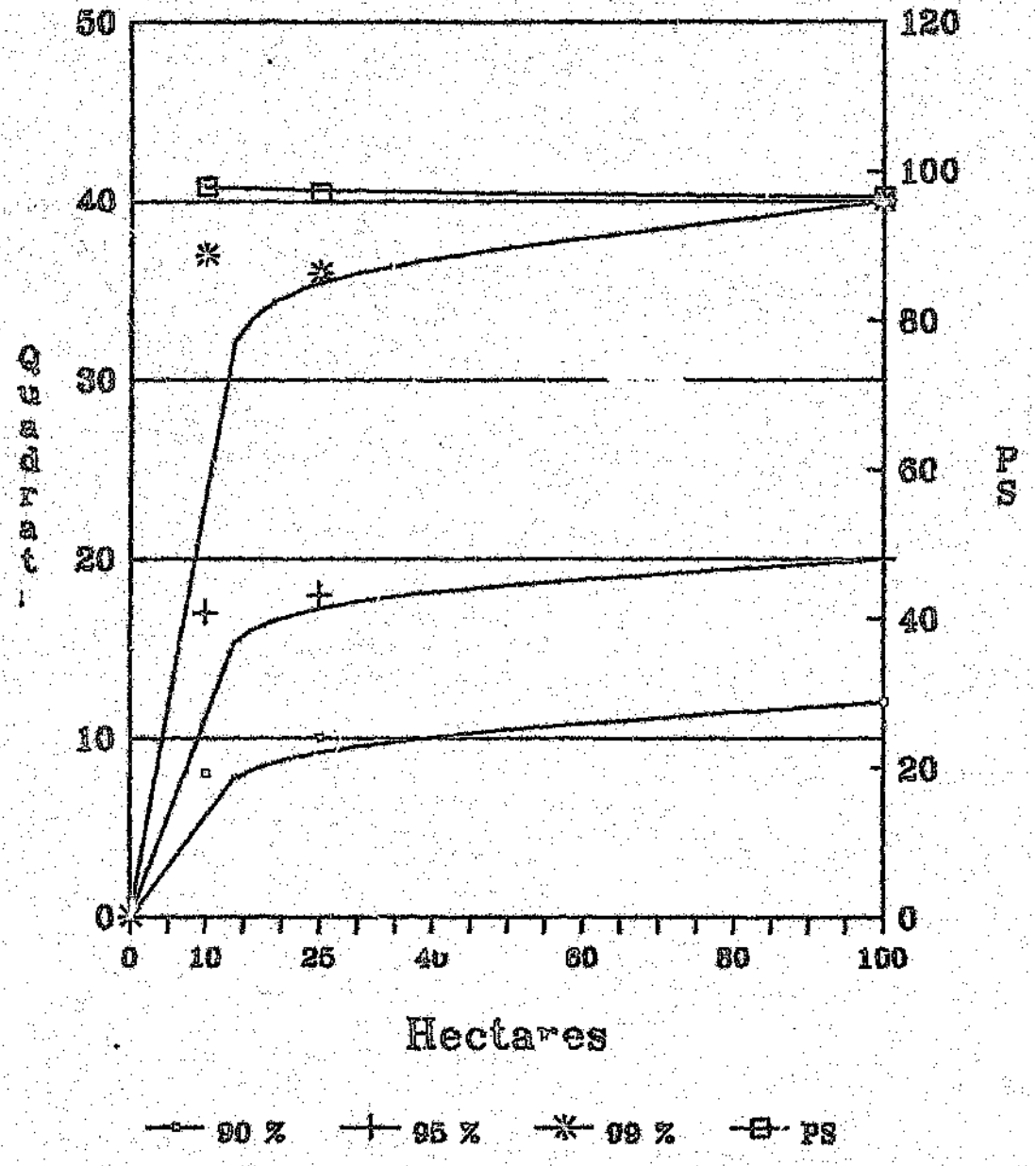

Figure 8. Graphical display of the number of plots per site and the associated level of description (*PS*) retrieved at 90, 95 and 99% of the asymptotic value (β_0), by the exponential non-linear regression model.

Table 9. Inverse of the non-linear regression models, at 90, 95 and 99% of the asymptotic value, from which to calculate the number of plots required per unit area.

90 % level $$Y = a\left(\frac{x}{x+b}\right)$$

where Y = number of plots
x = area in hectares
a = 12.6217
b = 6.9810

95 % level $$Y = a\left(\frac{x}{x+b}\right)$$

where Y = number of plots
x = area in hectares
a = 20.0382
b = 1.9541

99 % level $$Y = a\left(\frac{x}{x+b}\right)$$

where Y = number of plots
x = area in hectares
a = 39.8259
b = 1.1833

Table 10. Results of (1) the fitted multiplicative linear regression model to the mean *PS* retrieved for the 10, 25 and 100 ha sites and (2) the function to calculate the level of description (% internal association) associated with the number of plots required per unit area.

(1) Regression Analysis - Multiplicative model: $Y=aX^b$

a	b	F Test (P)	Correlation coefficient	Standard error of estimate	R^2
2.00892	-0.0061	0.09	-0.989	0.00145	97.91%

(2) Function to calculate the expected level of description in terms of percentage internal association related to sampling intensity.

$$Y_1=(aY_2)^b(100)(Z\%)$$

where Y_1 = level of description
Y_2 = required number of plots
a = 2.00892
b = -0.0066
Z = % of the asymptotic value at which the number of plots was calculated.

2.4.3.2 REPLICATE ORDINATION APPROACH

The percentage non-significant values for the Kolmogorov-Smirnov goodness of fit tests are displayed in table 11. Table 12 displays the results of the exponential and Chapman-Richards non-linear regression models used to describe the data. Both models satisfy the requirement of homoscedasticity and randomness of residuals ($P>0.05$), have high descriptive qualities indicated by the R^2 value, and adequately describe the data.

There is no obvious superiority of either model and a random choice between the two was taken, resulting in the minimum number of plots per site and the associated percentage of non-significant Kolmogorov Smirnov values predicted by the Chapman-Richards model being selected (table 13) for further analysis. This data was described by the negative exponential, Michaelis Menton and exponential non-linear models, as shown in table 14 and 15, to determine the number of plots required per unit area to be sampled. Each of the models adequately fit the data. In this case the rule of parsimony dictates the use of a two parameter model over a three parameter model, and due to the marginally higher R^2 value of the Michaelis Menton model, these results were accepted. Figures 9 and 10 graphically display these results. The inverse of the Michaelis Menton function results in the formulas shown in table 17 from which the number of plots required per unit area can be calculated.

The associated percentage non-significant values (table 13) were modelled by the negative exponential, Michaelis Menton and exponential models, as displayed in table 16. Again all three models adequately describe the data and the Michaelis Menton model was judged to be superior. The results of this model are graphically displayed in figures 9 and 10 in association with the number of plots per hectare. From the inverse of the Michaelis Menton models, the functions to calculate the level of description associated with the required number of plots per sample unit were derived (table 18).

Table 19 displays the beta diversity associated with sampling intensity under increasing study site size. Table 20 displays the results of the 4 X 2 contingency table to test for the dependence of beta diversity with increasing area on sampling intensity. The Chi-Square statistic (STSC, Inc. 1988) was found to be non-significant ($P>0.05$) and the null hypothesis (Ho) therefore rejected, indicating no dependence.

Table 11 Percentage non-significant Kolmogorov-Smirnov values of the frequency distribution comparisons of each J set of plots for 10, 25 and 100 ha sites, at 90 and 95% confidence levels.

J	% NON-SIGNIFICANT VALUES	
	CONFIDENCE LEVEL	
	95 %	99 %
10 ha site		
10	29 %	12 %
15	52 %	52 %
20	69 %	49 %
25	79 %	79 %
30	77 %	77 %
35	81 %	81 %
25 ha site		
10	13 %	3 %
15	38 %	38 %
20	71 %	45 %
25	84 %	84 %
30	70 %	70 %
35	86 %	86 %
100 ha site		
10	58 %	45 %
15	67 %	67 %
20	85 %	69 %
25	87 %	87 %
30	87 %	87 %
35	93 %	93 %

Table 12. Number of plots (N) per site at 90, 95 and 99% of the asymptotic value, using the inverse of the fitted non linear regression functions used to describe the non-significant Kolmogorov-Smirnov values at 95% and 99% confidence levels.

	FITTED VALUES				ESTIMATED VALUES AT 90, 95 AND 99% OF THE ASYMPTOTIC VALUES						MAS TEST	RESIDUAL PLOT
					90%		95%		99%			HOMOSCE-DASTIC
FUNCTION	B0	B1	B2	R^2	PS	N	PS	N	PS	N	(P)	
10 ha site 95% confidence level												
EXP	83.733	-195.6	-0.127	0.980	75.4	25	79.5	33	83.0	43	0.047	YES
C-R	81.935	0.171	0.013	0.981	73.8	23	77.9	27	81.1	37	0.047	YES
10 ha site 99% confidence level												
EXP	85.949	-214.1	-0.109	0.922	77.35	30	81.55	38	85.10	51	0.334	YES
C-R	82.070	0.159	0.059	0.910	74.59	25	78.77	31	82.05	41	0.334	YES
25 ha site 95% confidence level												
EXP	87.280	-252.6	-0.124	0.927	76.55	23	82.92	33	86.41	48	0.047	YES
C-R	82.592	0.233	0.954	0.945	77.03	23	81.31	28	84.74	33	0.047	YES
25 ha site 99% confidence level												
EXP	96.099	-213.0	-0.003	0.919	86.49	37	91.29	45	95.14	65	0.334	YES
C-R	85.739	0.190	0.017	0.914	77.17	29	81.45	33	84.80	42	0.334	YES
100 ha site 95% confidence level												
EXP	96.035	-90.70	-0.092	0.946	86.43	25	91.23	33	95.06	50	0.047	YES
C-R	92.625	0.090	0.080	0.947	86.06	25	90.84	32	94.66	49	0.047	YES
100 ha site 99% confidence level												
EXP	101.14	-115.9	-0.074	0.957	91.02	33	96.08	42	100.1	64	0.334	YES
C-R	100.58	0.079	0.224	0.956	90.52	32	95.55	41	99.50	61	0.334	YES

EXP = Exponential function C-R = Chapman Richards function

Table 13. Number of plots per site at 90, 95 and 99% of the asymptotic value from the Chapman-Richards model used to describe the non-significant Kolmogorov-Smirnov values, at the 95% and 99% confidence levels.

95% CONFIDENCE LEVEL

	NUMBER OF QUADRATS (N) AT 90, 95 AND 99% OF THE ASYMPTOTIC VALUES			
SITE	90%	95%	99%	% NS VALUES
10	23	27	37	81.965
25	23	26	33	82.592
100	25	32	49	92.625
				$\bar{X}$=85.73

99% CONFIDENCE LEVEL

	NUMBER OF QUADRATS (N) AT 90, 95 AND 99% OF THE ASYMPTOTIC VALUES			
SITE	90%	95%	99%	% NS VALUES
10	26	31	41	82.878
25	28	33	42	85.739
100	32	41	61	100.581
				$\bar{X}$=89.73

Table 14. Non linear regression models used to describe the number of plots per site (calculated from the Chapman-Richards model at 90, 95 and 99% levels of the asymptotic value) based on a 95% confidence level.

FUNCTION	FITTED VALUES			R^a	RESIDUAL PLOT HOMOSCEDASTIC
	B0	B1	B2		
90% of the asymptotic value					
- EXP	24.522	0.277		0.999	YES
MM	25.117	0.954		0.999	YES
EXP	24.521	-24.52	-0.277	0.999	YES
95% of the asymptotic value					
- EXP	29.764	0.198		0.981	YES
MM	31.775	2.596		0.992	YES
EXP	29.765	-29.74	-0.198	0.981	YES
99% of the asymptotic value					
- EXP	45.519	0.110		0.962	YES
MM	50.294	6.159		0.987	YES
EXP	45.590	-45.05	-0.108	0.962	YES

- EXP = Negative Exponential function
MM = Michaelis Menton function
EXP = Exponential function

Table 15. Non linear regression models used to describe the number of plots per site (calculated from the Chapman-Richards model at 90, 95 and 99% levels of the asymptotic value) based on a 99% confidence level.

FUNCTION	FITTED VALUES			R^2	RESIDUAL PLOT HOMOSCEDASTICITY
	β0	β1	β2		
90% of the asymptotic value					
- EXP	30.271	0.189		0.989	YES
MM	32.169	2.610		0.997	YES
EXP	30.272	-30.24	-0.189		YES
95% of the asymptotic value					
- EXP	37.777	0.159		0.971	YES
MM	41.048	3.795		0.989	YES
EXP	37.783	-37.86	-0.158	0.971	YES
99% of the asymptotic value					
- EXP	55.245	0.107		0.973	YES
MM	61.602	6.594		0.984	YES
EXP	55.495	-54.45	-0.103	0.928	YES

- EXP = Negative Exponential function
MM = Michaelis Menton function
EXP = Exponential function

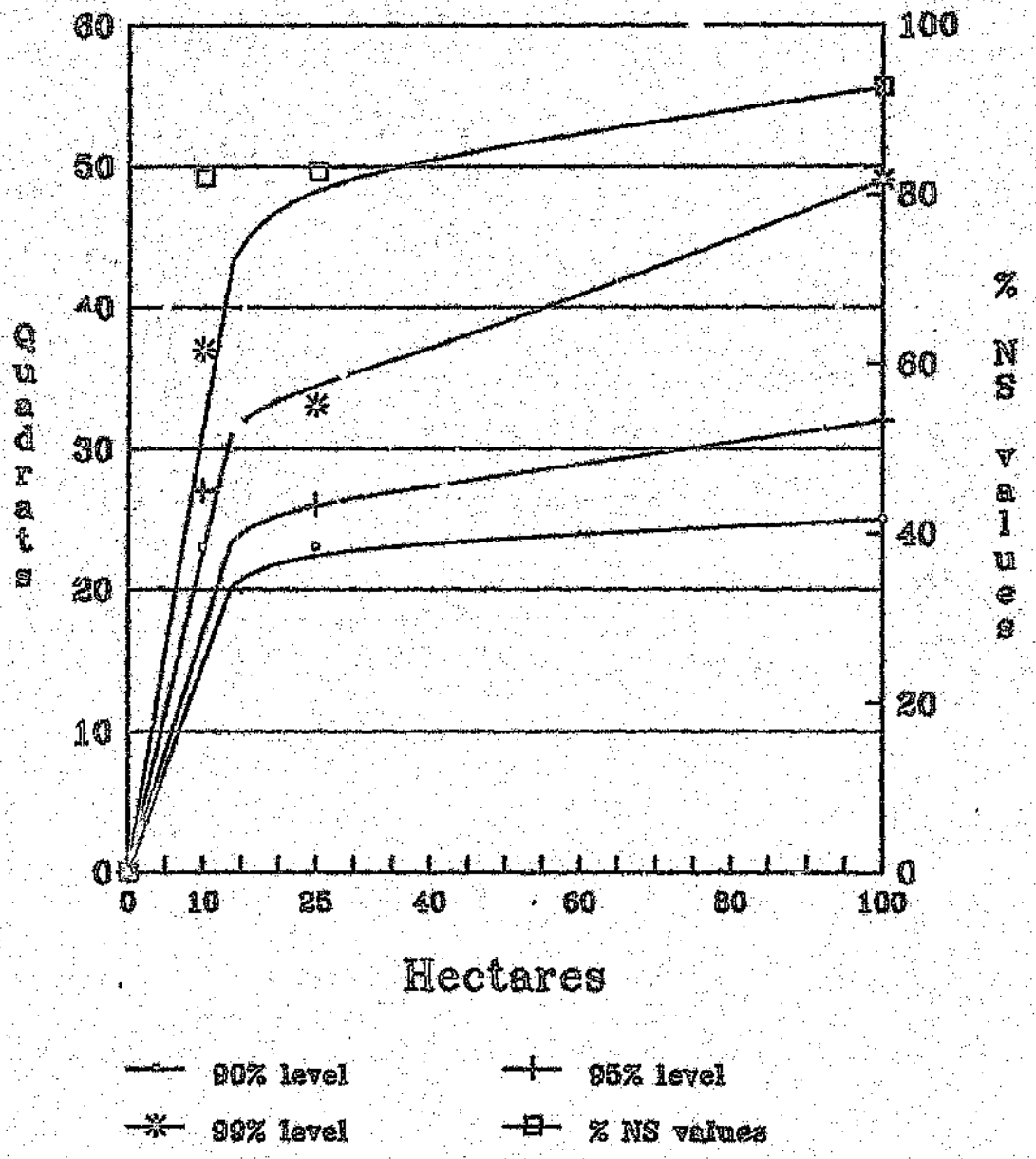

Figure 9. Graphics display of the number of plots per site at 90, 95 and 99% of the asymptotic value, predicted by the Chapman-Richards non-linear regression model at the 95% confidence level.

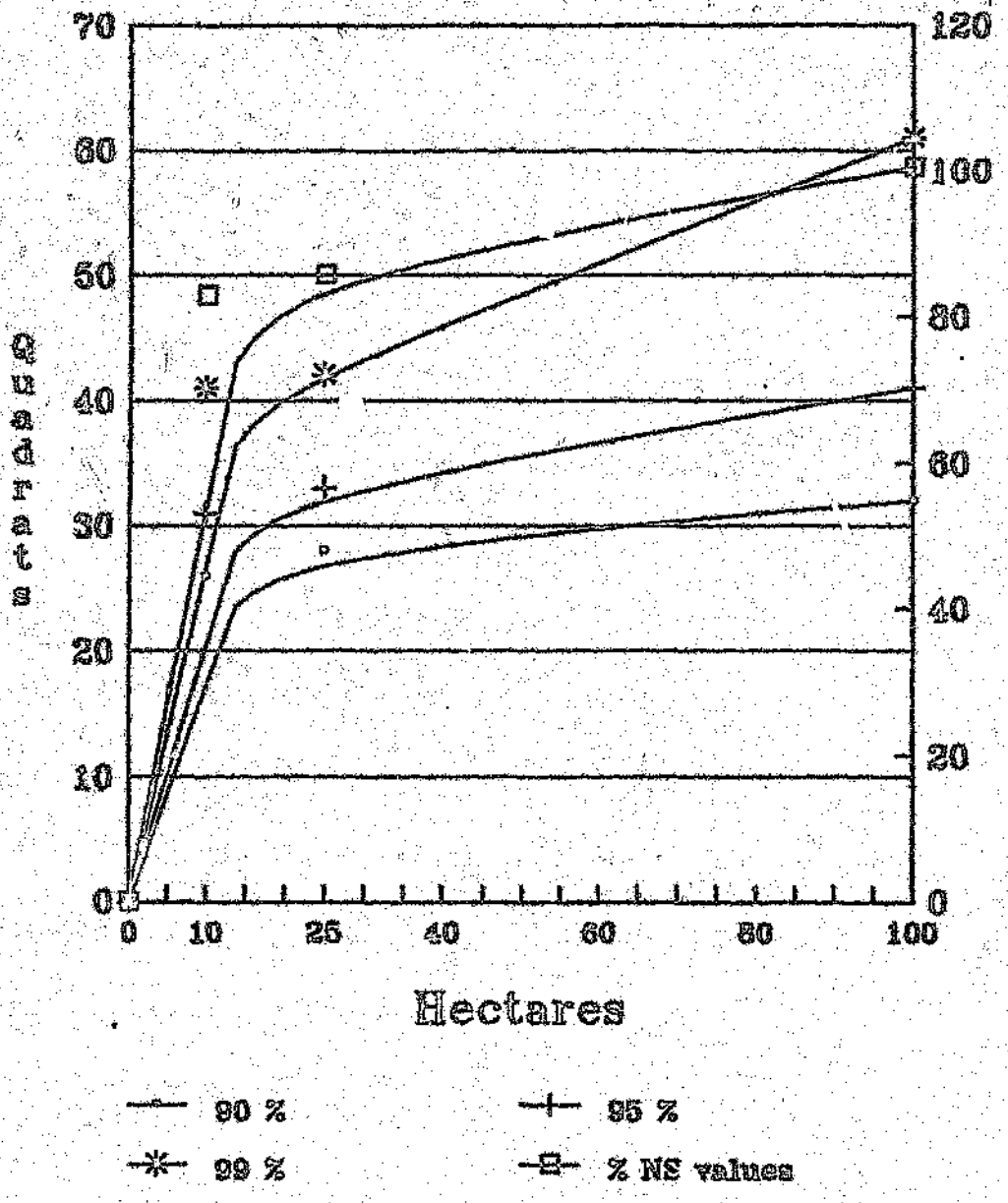

Figure 10. Graphical display of the number of plots per site at 90, 95 and 99% of the asymptotic value, predicted by the Chapman-Richards non-linear regression model at the 99% confidence level.

Table 16. Inverse of the non-linear regression models, at 80, 95 and 99% of the asymptotic value for both the 95 and 99% confidence levels, from which to calculate the number of plots required per unit area.

95% confidence level.

1) 90% of the asymptotic value

$$Y = a\left(\frac{x}{x+b}\right)$$

where Y = number of 40 X 40 m quadrats.
x = unit area in hectares.
a = 25.117
b = 0.954

2) 95% of the asymptotic value

$$Y = a\left(\frac{x}{x+b}\right)$$

where Y = number of 40 X 40 m quadrats.
x = unit area in hectares.
a = 31.775
b = 2.598

3) 99% of the asymptotic value

$$Y = a\left(\frac{x}{x+b}\right)$$

where Y = number of 40 X 40 m quadrats.
x = unit area in hectares.
a = 50.294
b = 6.159

Table 18. Continued.

98% confidence level.

1) 96% of the asymptotic value

$$Y = a\left(\frac{x}{x+b}\right)$$

where Y = number of 40 X 40 m quadrats.
x = unit area in hectares.
a = 32.169
b = 2.610

2) 95% of the asymptotic value

$$Y = a\left(\frac{x}{x+b}\right)$$

where Y = number of 40 X 40 m quadrats.
x = unit area in hectares.
a = 41.048
b = 3.795

3) 99% of the asymptotic value

$$Y = a\left(\frac{x}{x+b}\right)$$

where Y = number of 40 X 40 m quadrats.
x = unit area in hectares.
a = 61.602
b = 6.594

Table 17. Results of the non-linear regression models used to describe the percentage of non-significant Kolmogorov-Smirnov (KS) values (level of description) at both the 95% and 99% confidence levels.

FUNCTION	FITTED VALUES			R^2	RESIDUAL PLOT HOMOSCEDASTIC
	B0	B1	B2		
95% confidence level					
- EXP	87.778	0.267		0.991	YES
MM	91.380	1.363		0.996	YES
EXP	87.783	-87.77	-0.267	0.991	YES
99% confidence level					
- EXP	93.815	0.207		0.983	YES
MM	99.755	2.374		0.983	YES
EXP	93.825	-93.76	-0.207	0.983	YES

- EXP = Negative Exponential function
MM = Michaelis Menton function
EXP = Exponential function

Table 18. Formula, derived from the inverse of the non-linear model, to calculate the level of description (percentage non-significant Kolmogorov-Smirnov values) associated with the minimum number of plots required per unit area.

95% confidence level.

$$Y_1 = \left(a\left(\frac{Y}{Y+b}\right)\right)Z\%$$

where Y_1 = level of description.
Y = number of 40 X 40 m quadrats.
a = 91.360
b = 1.363
Z = % of the asymptotic value at which the number of plots was calculated

99% confidence level.

$$Y_1 = \left(a\left(\frac{Y}{Y+b}\right)\right)Z\%$$

where Y_1 = level of description.
Y = number of 40 X 40 m quadrats.
a = 99.755
b = 2.374
Z = % of the asymptotic value at which the number of plots was calculated

Table 13. Beta diversity per site with increasing sampling intensity (J).

J	β diversity
10 ha site	
10	0.3411
15	0.4031
20	0.3513
25	0.3688
30	0.4130
35	0.4251
25 ha site	
10	0.3850
15	0.3801
20	0.3986
25	0.4124
30	0.4195
35	0.4304
100 ha site	
10	0.4663
15	0.4766
20	0.4655
25	0.4868
30	0.4896
35	0.4945

Table 20. Results of the 4 X 2 contingency table using the Chi-Square option.

Ho: Beta diversity with increasing area is independant of sampling intensity.

Ha: Beta diversity with increasing area is not independant of sampling intensity.

Frequency Percent Row percent Column percent	SITE (ha)			TOTAL
	10	25	100	
J 10	34.11 4.49 28.56 14.83	38.5 5.06 32.23 15.87	45.83 6.16 39.21 16.29	119.44 15.71
15	40.31 5.30 32.00 17.52	38.01 5.00 30.17 15.67	47.66 6.27 37.83 18.56	125.98 16.57
20	35.13 4.62 28.90 15.27	39.86 5.24 32.80 16.43	46.55 6.12 38.30 16.19	121.54 15.99
25	36.68 4.83 29.11 15.95	41.24 5.43 32.73 17.00	48.08 6.32 38.16 16.72	126.00 16.58
30	41.3 5.43 31.24 17.96	41.95 5.52 31.73 17.29	48.96 6.44 37.03 17.03	132.21 17.39
35	42.51 5.59 31.49 18.48	43.04 5.66 31.88 17.74	49.45 6.51 36.63 17.20	135.00 17.76
Total	230.04 30.26	242.6 31.91	287.53 37.82	760.17 100.00

Statistic	DF	Value	Prob.
Chi-Square Likelihood ratio Chi-Square Contingency coefficient	10 10	0.803 0.805 0.032	1.000 1.000

Sample size = 760

P > 0.05 therefore accept HO

2.4.4 DISCUSSION

The final models from which to calculate sampling intensity and the associated level of description, based on the replicate similarity and replicate ordination procedures, are directly related to proportional species composition and the size of the area to be sampled. This is an extension of the procedure proposed by Mentis (1984), and is considered to offer a practical, cost-effective means for the end user to determine sampling intensity for the various sites to be monitored. An advantage of these models is there versatility. For any area to be sampled a range of sampling intensities and the associated level of description can be calculated under varying levels of confidence as demonstrated in example 1.

Example 1. The number of plots (N) required and the level of description (D) calculated from the models derived through the REPSIM and the Replicate Ordination procedures at 90 and 99% confidence levels for 90, 95 and 99% of the asymptotic value.

Area to be sampled = 23.2 ha

	Replicate similarity			Replicate ordination					
				95% Confidence level			99% Confidence level		
	90%	95%	99%	90%	95%	99%	90%	95%	99%
N	10	18	38	24	29	40	29	35	48
D	88.2%	92.8%	96.2%	77.8%	82.9%	87.5%	83.0%	88.7%	94.1%

This is considered of particular importance, as various factors effect the actual sampling intensity at which it is possible to execute a monitoring exercise. Such factors are,

1) the expected rate of change of the vegetation, which will determine the period between follow-up surveys,
2) the total size of the area to be sampled and the nature of the topography,
3) the manpower available for the fieldwork,
4) the amount of time such personnel have available for the fieldwork,

5) the number of plots that can be sampled per day, before error increases due to fatigue and

6) the funds available.

Only after having thoroughly considered each of the above points can it be determined, from the calculated range, at which sampling intensity it is possible to execute the monitoring exercise. It is then possible to ascertain, *a priori*, whether the associated level of description and confidence are adequate in terms of the objectives and goals of the area to be studied.

Considering that subjectivity in the choice of a sampling design can only be reduced and not totally eliminated and that conservative options towards more intensive sampling were taken throughout the analysis, these results are considered to be broadly applicable within the grasslands of the North Eastern Mountain Sourveld (Acocks 1975).

The use of area for determining sampling intensity based on proportional species composition or beta diversity is justifiable, apparent from the results of the contingency table analysis (table 20). These results reveal that beta diversity under increasing area is independent of sampling intensity. This indicates that the inherent variability associated with the size of a study site determines the asymptote and consequently the minimum number of sample plots required.

An inevitable weakness in the method followed, is that sampling intensity in terms of beta diversity per unit area is tied up with the fact that the study sites were limited by subjective boundaries. This implies that the models from which the minimum number of sample plots required per unit area and the associated level of description are calculated, must be used cautiously in areas larger than 100 ha. This constraint does not pose a problem in a rugged area such as the WWA, as homogeneous land units identified through stratification will as a rule be less than 100 ha.

The results obtained from relating sampling intensity to area based on proportional species composition or beta diversity agree with Diamond (1975) and Price (1984), who suggest that area is likely to be correlated with resource diversity. Price proposed a resource heterogeneity paradigm which asserts that the number of species present in a community is positively related to the number of resources present. Alternatively, larger areas sample larger numbers of species, accumulating more species per unit time.

Sampling intensity is the final requirement of the sampling design as set out in the objective for this pilot study. Before such a sampling design can be implemented in a final monitoring system, it is necessary to evaluate the results obtained through this design, in terms of sensitivity and power in detecting true vegetational change. This is of considerable importance in a vegetation monitoring context and is investigated in detail in the following chapter of this study.

2.4.5 CONCLUSION

The investigation of sampling intensity aimed to determine the minimum number of plots required to achieve a known level of description. This was subsequently related to area through describing how the level of description varies with sampling effort.

The data was collected through recording the nearest rooted living plant to each of 200 points, using the wheel point apparatus, per plot of 40 X 40m. 50 such plots were randomly located in a homogeneous 10ha study site. The study site was increased to 25ha and then 100ha to include greater vegetational diversity and sampling within 50 plots repeated in each site.

From the total data set of each site random samples were drawn to test the precision of the results obtained. Two analysis procedures were applied, namely a replicate similarity and a replicate ordination approach. The replicate similarity approach yielded a set of similarity measures through the comparison of each randomly drawn set of data with every other, using a percentage similarity measure. For the replicate ordination approach, the frequency distribution of samples along the first ordination axis for each randomly drawn set was compared with every other using the Kolmogorov-Smirnov goodness of fit test, from which the percentage non-significant values was determined at both the 95 and 99% confidence levels.

The replicate similarity data and the percentage non-significant Kolmogorov-Smirnov values were modelled using non-linear regression. The models judged to best describe the data were selected, from which the number of plots required per study site and the associated level of description were calculated. From these results the final models, for calculating sampling intensity and the associated level of description based on the size of an area to be studied, were developed.

CHAPTER 3 COMPARISON OF BASELINE AND FOLLOW-UP SURVEYS

3.1 INTRODUCTION

This section of the study is concerned with formulating the grounds on which a null hypothesis (Ho), of there being no significant difference between abundance or relative abundance of baseline and follow up surveys, will fail. This is necessary, as an important aspect of this type of hypothesis testing is the underlying value judgement. According to Mentis (1988) rejection of a hypothesis within an ecological context rests ultimately on a decision regarding the nature and scale of difference considered important, and the level of explanation that is felt to be satisfactory. As these decisions are subjectively based it becomes essential under the hypothetico-deductive scheme to formulate *a priori* the grounds for hypothesis failure. Furthermore, the grounds for failur must be appropriate to the system under study in terms of the poral and spatial scales and the objectives for the area.

The conditions under which a hypothesis will fail must also take into consideration the important requirement for a monitoring system to act as an early warning device, to detect change before it becomes serious or far advanced. This brings to attention the importance of the classical trade-off between type I and type II errors, discussed in many statistical texts and references (Steel and Torrie 1960; Snedecor and Cochran 1967; Sokal and Rohlff 1981; Zar 1974). Hinds (1984) describes a Type I and Type II error in a monitoring context. A Type I error means a change is proclaimed when no change exists and a Type II error means that no change is declared when a change does in fact exist. According to Hinds the ability to avoid Type I errors is described in terms of the sensitivity or significance of the design. The ability to avoid Type II errors is described in terms of the power of the design, which Zar (1974) refers to as the probability of rejecting the null hypothesis when it is in fact false and should be rejected. Often Type II error and power are ignored, whilst sensitivity is maximised. Hinds advises that the implications of using "powerless" designs are particularly severe in a monitoring context. If a biologically significant change cannot be determined to be real the monitoring effort is a failure.

Finally in the development of a monitoring system and the definition of conditions under which the hypothesis will fail, it is also important to consider the following background theory.

The primary aim of monitoring is to detect a departure from management goals and, by definition, not necessarily the cause of such departure. Obviously it is not practicable to strive to understand all things about a system and we should therefore maintain surveillance of the important things or things that count the most (Mentis 1984). It is nevertheless important that a monitoring system should also facilitate the interpretation of any detected change.

In any monitoring exercise, cost is an important aspect. It is largely the cost of the routine work that determines the cost-effectiveness of a monitoring system (Hinds 1984). Inevitable logistical limitations will reduce the scope of an ideal system. The final sampling design or intensity at which the routine data collection can be undertaken, depends on various logistical questions that need to be answered, as discussed in chapter 2.

During this phase of the study various sampling intensities covering the calculated range resulting from the REPSIM and Replicate Ordination procedures were tested, together with the sensitivity of the data analysis technique to a known degree of simulated change. An iterative procedure was followed whereby data was collected using the developed sampling designs, processed, analysed and interpreted in terms of quality and description. Further sets of data were then collected from the same area and the analysis and interpretation repeated. This approach enabled the predictive ability of the sampling procedure and analysis to be assessed. To ensure that the predictive ability was based on true vegetational change and not sampling error, the first set of data was collected as a baseline survey followed immediately, before any change in the vegetation could possibly have occurred, by a follow-up survey.

A functional monitoring system cannot be achieved in one step. Macdonald and Grimsdell (1983) suggest a framework for initiating a monitoring system and then improving it in the light of experience. This is a form of successive refinement which Gauch (1982) describes as involving repeated cycles of knowledge, questions and observations. This approach has been encouraged as an important working pattern of community ecologists (Southwood 1978; Noy-Meir 1979; Solomon 1979). The framework of Macdonald and Grimsdell (1983) suggests firstly the development of a sampling design within logical limits, secondly implementation and thirdly re-evaluation. In this study the last two phases have been combined.

3.2 OBJECTIVE

The objective of this phase of the study was to test through an iterative procedure of baseline and follow-up surveys, the sensitivity

and power of two monitoring procedures to known levels of vegetation change, under increasing sampling intensity and associated levels of description.

3.3 PROCEDURE

A central concern of vegetation monitoring within the WWA is proportional species composition or beta diversity (β). According to Magurran (1988) β diversity is a measure of how different or similar a range of habitats or samples are in terms of the variety and abundance of species found in them. One way of viewing β diversity is to compare the species composition of different communities or the same community over time. An important concept of β diversity that Magurran highlights, is that there is no reason why β diversity should only be investigated in terms of transects and environmental gradients as β diversity is the variation in species composition between areas of alpha diversity (α). This same argument can be applied within areas or communities over time, described by way of baseline and follow-up surveys.

β diversity can be measured through an investigation of the degree of association or similarity of sites or samples using standard ecological techniques (Southwood 1978; Greig-Smith 1983; Pielou 1984; Magurran 1988). The easiest method to measure β diversity of pairs of sites according to Magurran 1988 is by the use of similarity coefficients such as the Sorenson index for quantitative data. Additionally ordination techniques can be used to investigate the overall similarity of sites. This approach does not yield any direct measure of β diversity *per se*, but may be used to describe how species diversity, in terms of species turnovers, changes along gradient. A useful technique is detrended correspondence analysis (DCA) (Jeffers 1978; Gauch 1982; Greig-Smith 1983; Pielou 1984; Ter Braak 1988). Both approaches were tested.

The study area used was 43.5 ha. The sampling intensity range and the associated level of description were calculated from the models developed through the REPSIM and Replicate Ordination procedures of chapter 2, as presented in table 21.

Table 21. Sampling intensity (J) and the associated level of description calculated for a 43.5 ha study site using the REPSIM and Replicate Ordination models.

	REPSIM			REPLICATE ORDINATION					
				95% non-significant Kolmogorov-Smirnov values			99% non-significant Kolmogorov-Smirnov values		
% of asymptotic value	90%	95%	99%	90%	95%	99%	90%	95%	99%
No. of quads (J)	11	19	39	25	30	44	30	38	53
Level of description (%)	88.18	92.74	98.19	77.97	83.02	87.73	83.20	89.19	94.52

The following sampling intensities (table 22) from the above range (table 21) were tested through an iterative procedure of baseline and follow-up surveys.

Table 22. Sampling intensity with associated level of description to be tested through a baseline and follow-up surveys.

PROCEDURE	CONFIDENCE LEVEL	% OF ASYMPTOTIC VALUE	PLOTS	LEVEL OF DESCRIPTION
REPSIM		90%	11	88.18%
REPLICATE ORDINATION	95% non sig. Kolmogorov-Smirnov values	95%	30	83.02%
REPLICATE ORDINATION	99% non sig. Kolmogorov-Smirnov values	99%	53	94.52%

The procedure followed was adapted from Mentis (1984).

1. A study site of 43.5 ha was selected through stratification (Westfall 1985).
2. 60 Plots of 40 X 40 m were randomly allocated in the study site using a 4 mm grid and random grid co-ordinates.
3. The nearest rooted living plant to each of 200 points, using the wheel point apparatus was recorded in each plot. Plants were as far as possible identified to species level (Gibbs-Russell and Smook 1980; Gibbs-Russell et al 1985).
4. The number of plots required for a stratum of 43.5 ha based on the REPSIM and Replicate Ordination procedures and the expected level of description were calculated (tables 21 and 22) using the appropriate models (tables 9 pg 51, 10 pg 52, 16 pg 61 and 18 pg 64)
5. For the baseline survey the sampling intensities were selected from the calculated range (table 21). 11 Plots based on the REPSIM procedure and 30 and 53 plots based on the Replicate Ordination procedure were randomly drawn without replacement, using a discrete uniform random number generator (STSC, Inc 1986), from the total number of plots.
6. An immediate follow-up survey was conducted with steps 2 to 5 being repeated.
7. For the similarity coefficient procedure, each of the 11 plots sampled during the baseline and follow-up surveys was compared with every other using the following Sorenson quantitative index (Bray and Curtis 1957; Southwood 1978; Magurran 1988) to yield a set of similarity measures.

$$CN = \frac{2jN}{(aN+bN)}$$

where CN = similarity between plots a and b
aN = the total number of individuals in plot a
bN = the total number of individuals in plot b
jN = the sum of the lower of the two abundances recorded for species in both sites.

8. The frequency distribution of the similarity coefficients for each baseline and follow-up survey was calculated and compared using the Kolmogorov-Smirnov goodness of fit test for grouped data (Zar 1974), to test the null hypothesis (Ho) of there being no significant difference between the two.

9. In the ordination procedure, to enable a meaningful comparison of the baseline and follow-up ordinations, two common dummy marker plots were inserted into each data set to facilitate the identification of reversed polarity of the first axes. The marker plots were made up to lie ca. one sixth and four sixths along the first axes. The marker plots were then removed and the data re-ordinated. In the cases of reversed polarity a mirror image of the first axis for the follow-up data was used to align the axes.

10. The grouped frequency distribution of samples along the primary ordination axis in class widths of 0.2 standard deviation units (SD), for each ordination, was determined.

11. The frequency distribution of the baseline and each corresponding follow-up survey was compared using the Kolmogorov-Smirnov goodness of fit test for grouped data (Zar 1974) to test the null hypothesis of there being no significant difference between the two.

12. Each plot of the follow-up data was changed by 10% and steps 7 to 11 repeated. The change was based on total abundance per plot and consisted of a reduction of 10% in the overall abundance of 200, randomly spread across the species recorded. The effected species were then removed from the data set. The amount by which the overall abundance was initially reduced was then randomly added to the remaining species, after which the removed species were again included.

13. Step 12 was repeated with 20% change.

14. Step 12 was repeated with 40% change, except at the sampling intensity of n = 53, due to the increased sensitivity of the test of Ho at a higher sampling intensity (Zar 1974).

3.4 RESULTS

3.4.1 SIMILARITY COEFFICIENTS

The results of the tests of Ho between baseline and follow-up surveys, based on the comparison of the frequency distribution of similarity coefficients using the Kolmogorov-Smirnov goodness of fit test for grouped data, are displayed in table 23. Figures 11 to 14 display the frequency distribution histograms of similarity coefficients of the above comparisons. In each case the histogram of the baseline survey is displayed on top.

The test of Ho at the 80% confidence level, confirms a difference between the baseline and true follow-up data (0% change), where no change could have in fact occurred. This is clearly the commitment of a Type I error, indicating a low sensitivity of the test at this confidence level. The follow-up survey with 10, 20 and 40% simulated change was confirmed to significantly differ from the baseline data.

At the 90% and 95% confidence levels, the sensitivity of the test is improved, with the true follow-up data (0% change) not significantly differing from the baseline. The confirmation of no difference between the two surveys, at the 10% degree of simulated change, is possibly due to the commitment of a Type II error indicating a reduction in the power of the test at this level. The 20% and 40% levels of simulated change in the follow-up data were confirmed to significantly differ from the baseline as expected.

At the 99% confidence level the power of the test is further reduced. No difference was confirmed between baseline and follow-up surveys with a 10 and 20% degree of simulated change.

3.4.2 ORDINATION

The scatter plots of samples along the first three ordination axes, for selected baseline and follow-up surveys, are displayed in figures 15 to 19 to graphically illustrate the trend of an increasing degree of simulated change in the follow-up data. The results of the Replicate Ordination approach are shown in table 24. The Kolmogorov-Smirnov values (D) for the comparison of the frequency distribution of plots along the first ordination axis in class widths of 0.2 SD are displayed, together with the results of the test of Ho at 80, 90, 95 and 99% confidence levels.

At a sampling intensity of n = 25, the test of Ho at the 80% and 90% confidence levels both yield meaningful results with satisfactory sensitivity and power. At the 95 and 99% confidence levels the power of the test is reduced with a 20% change at the 95% confidence level and a 40% change at the 99% confidence level not confirmed to significantly differ from the baseline.

At a sampling intensity of n = 30, the test of Ho at the 80% confidence level yields meaningful results. At the higher confidence levels the test of Ho is sensitive with a 0% change not being confirmed to differ from the baseline data as expected. At these levels the power of the test is however reduced with both a 10% and 40% change not being declared, when a change does in fact exist.

At a higher sampling intensity (n=53) the sensitivity of the test of H_0 is reduced, with a change being proclaimed at all four confidence levels when in fact no change (0%) took place. Conversely the power of the test at the higher sampling intensity has greatly improved, confirming a change that has in fact occurred.

Table 23. Results of the test of the null hypothesis (Ho) between baseline and follow-up surveys based on the similarity coefficient approach.

Ho: there is no significant difference between the proportional species composition (β diversity) of baseline and follow-up surveys.

Ha: there is a significant difference between the proportional species composition (β diversity) of baseline and follow-up surveys.

SURVEY	SIMULATED CHANGE	n	D	P	80%	90%	95%	99%
Baseline		11						
Follow-up	0%	11	0.36	0.1<P<0.2	*	NS	NS	NS
Follow-up	10%	11	0.33	0.1<P<0.2	*	NS	NS	NS
Follow-up	20%	11	0.40	0.02<P<0.05	*	*	*	NS
Follow-up	40%	11	0.93	<P<0.001	*	*	*	*

Where * = significant difference - Ho is refuted
NS = non-significant difference - Ho is accepted

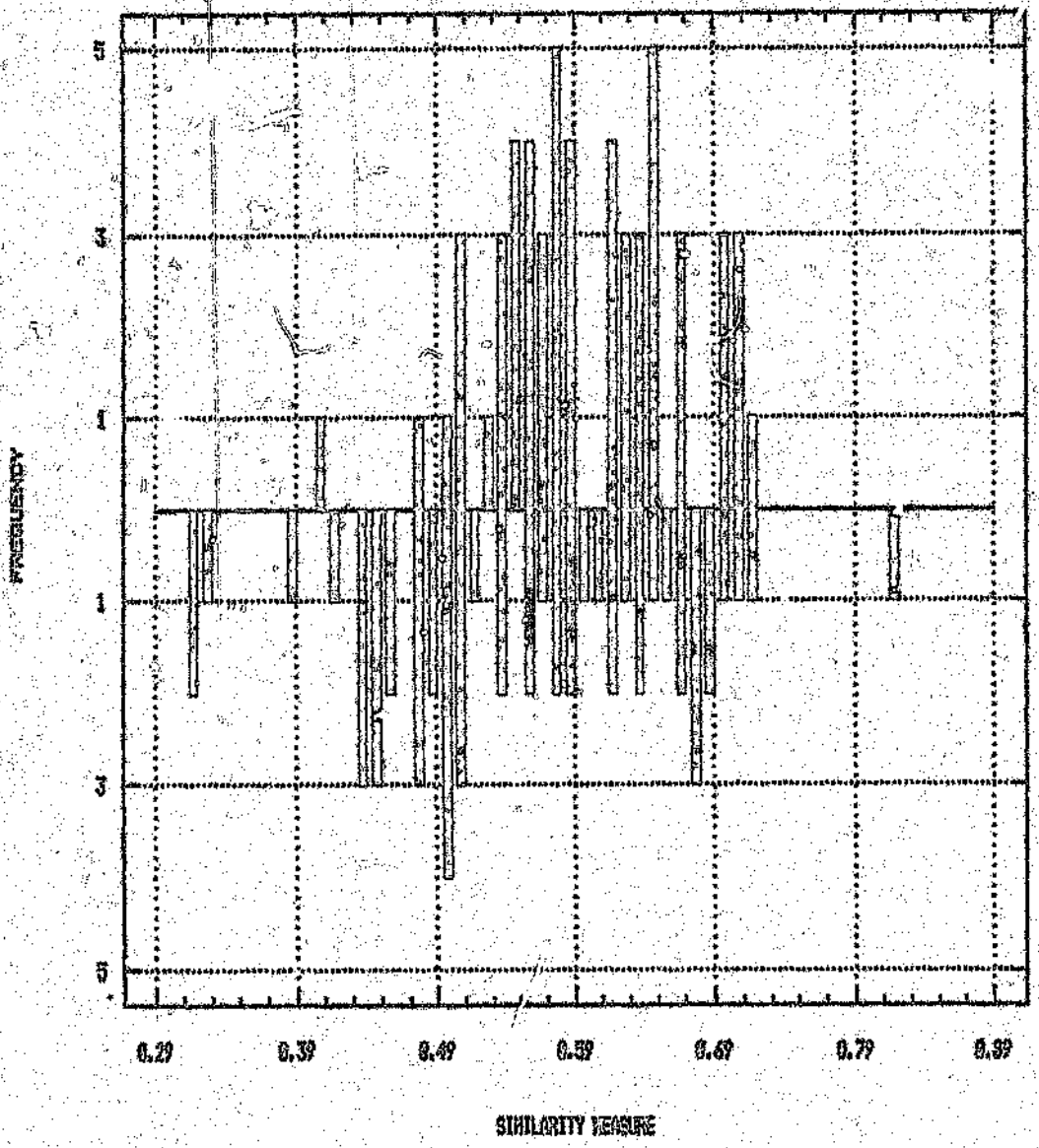

Figure 11. Frequency histogram of similarity coefficients for the baseline survey (top) and follow-up survey (bottom) with 0% change

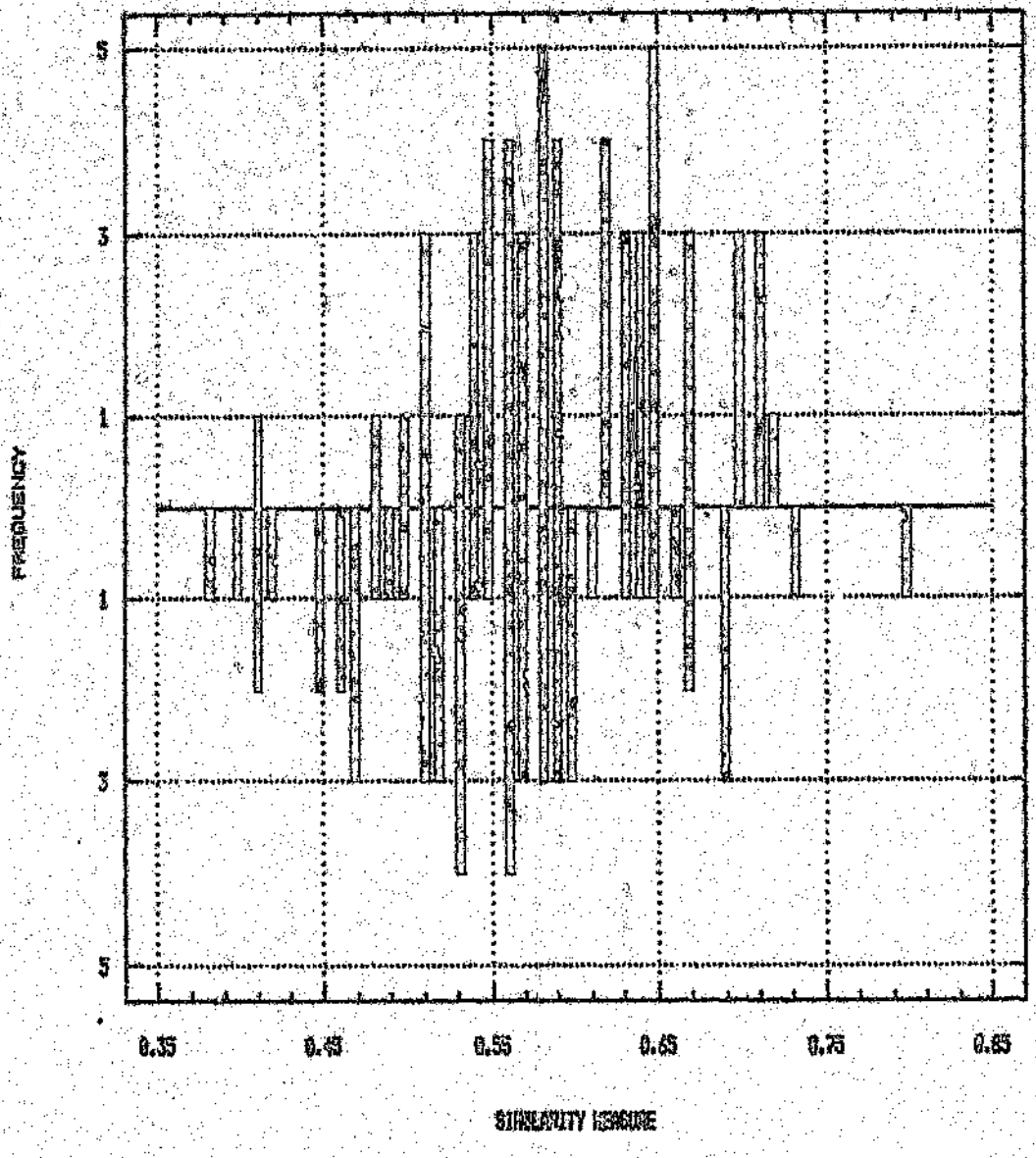

Figure 12. Frequency histogram of similarity coefficients for the baseline survey (top) and follow-up survey (bottom) with 10% change

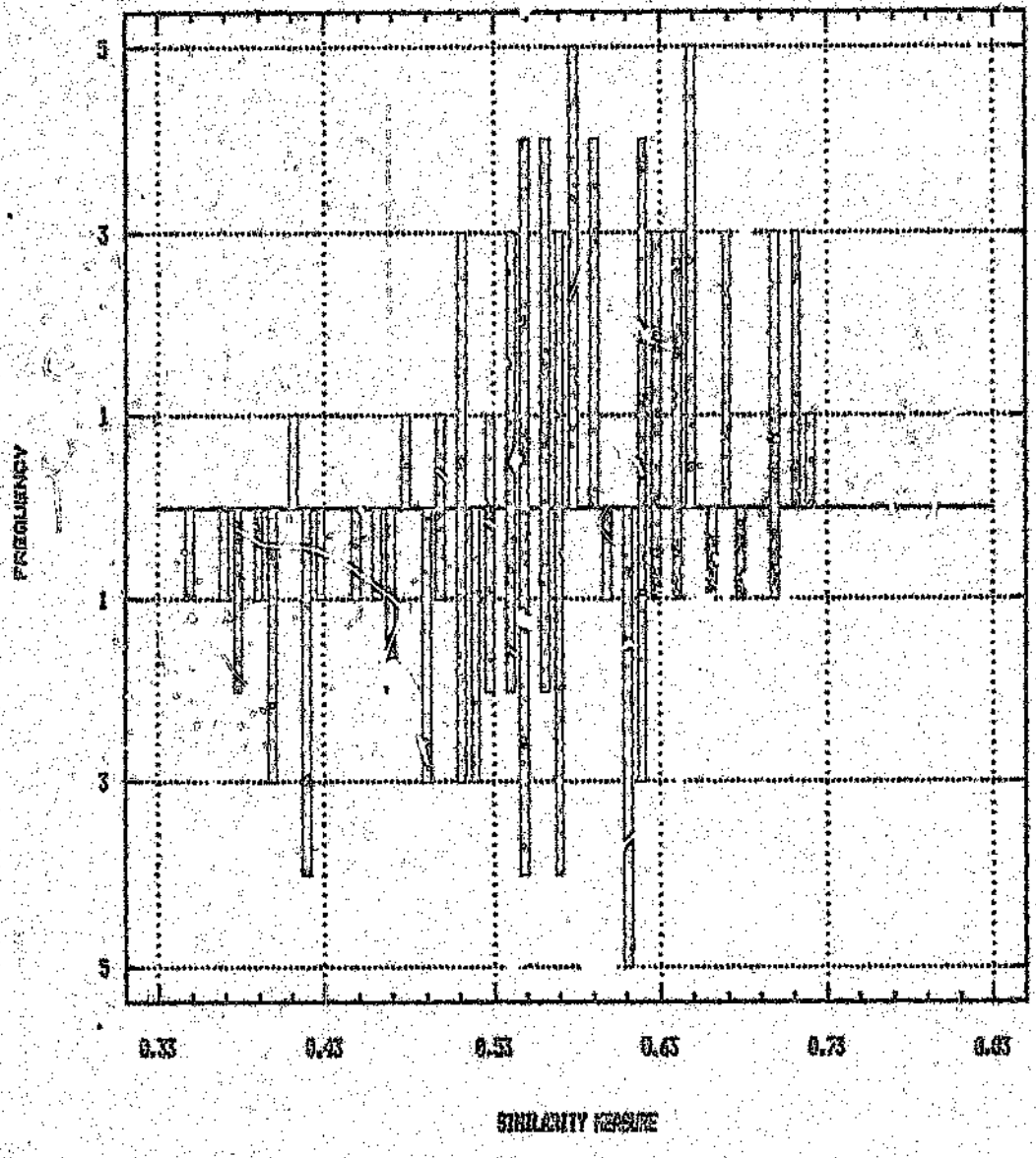

Figure 13. Frequency histogram of similarity coefficients for the baseline survey (top) and follow-up survey (bottom) with 20% change

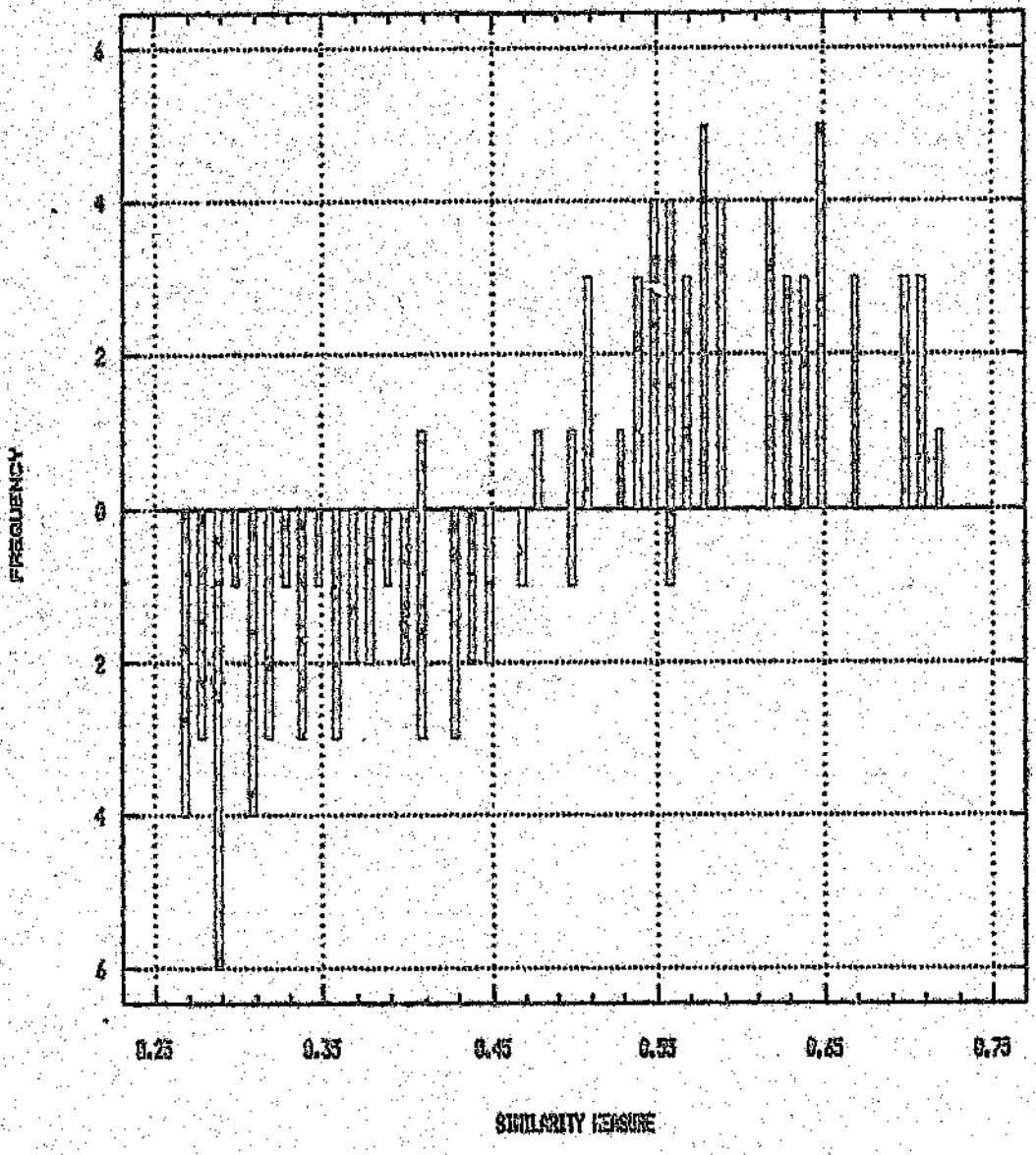

Figure 14. Frequency histogram of similarity coefficients for the baseline survey (top) and follow-up survey (bottom) with 40% change

Table 24. Results of the test of the null hypothesis (Ho) between baseline and follow-up surveys based on the ordination approach.

Ho: there is no significant difference between the proportional species composition (β diversity) of baseline and follow-up surveys.

Ha: there is a significant difference between the proportional species composition (β diversity) of baseline and follow-up surveys.

SURVEY	SIMULATED DECLINE	n	D	P	80%	90%	95%	99%
Baseline		25						
Follow-up	0%	25	0.12	0.5<P<	NS	NS	NS	NS
Follow-up	10%	25	0.20	0.2<P<0.5	*	NS	NS	NS
Follow-up	20%	25	0.24	0.05<P<0.1	*	*	NS	NS
Follow-up	40%	25	0.28	0.02<P<0.05	*	*	*	NS
Baseline		30						
Follow-up	0%	30	0.13	0.5<P<	NS	NS	NS	NS
Follow-up	10%	30	0.20	0.1<P<0.2	*	NS	NS	NS
Follow-up	20%	30	0.27	0.01<P<0.02	*	*	*	NS
Follow-up	40%	30	0.20	0.2<P<0.1	*	NS	NS	NS
Baseline		53						
Follow-up	0%	53	0.35	<P<0.001	*	*	*	*
Follow-up	10%	53	0.24	0.002<P<0.005	*	*	*	*
Follow-up	20%	53	0.19	0.02<P<0.05	*	*	*	NS

Where * = significant difference - Ho is refuted
NS = non-significant difference - Ho is accepted

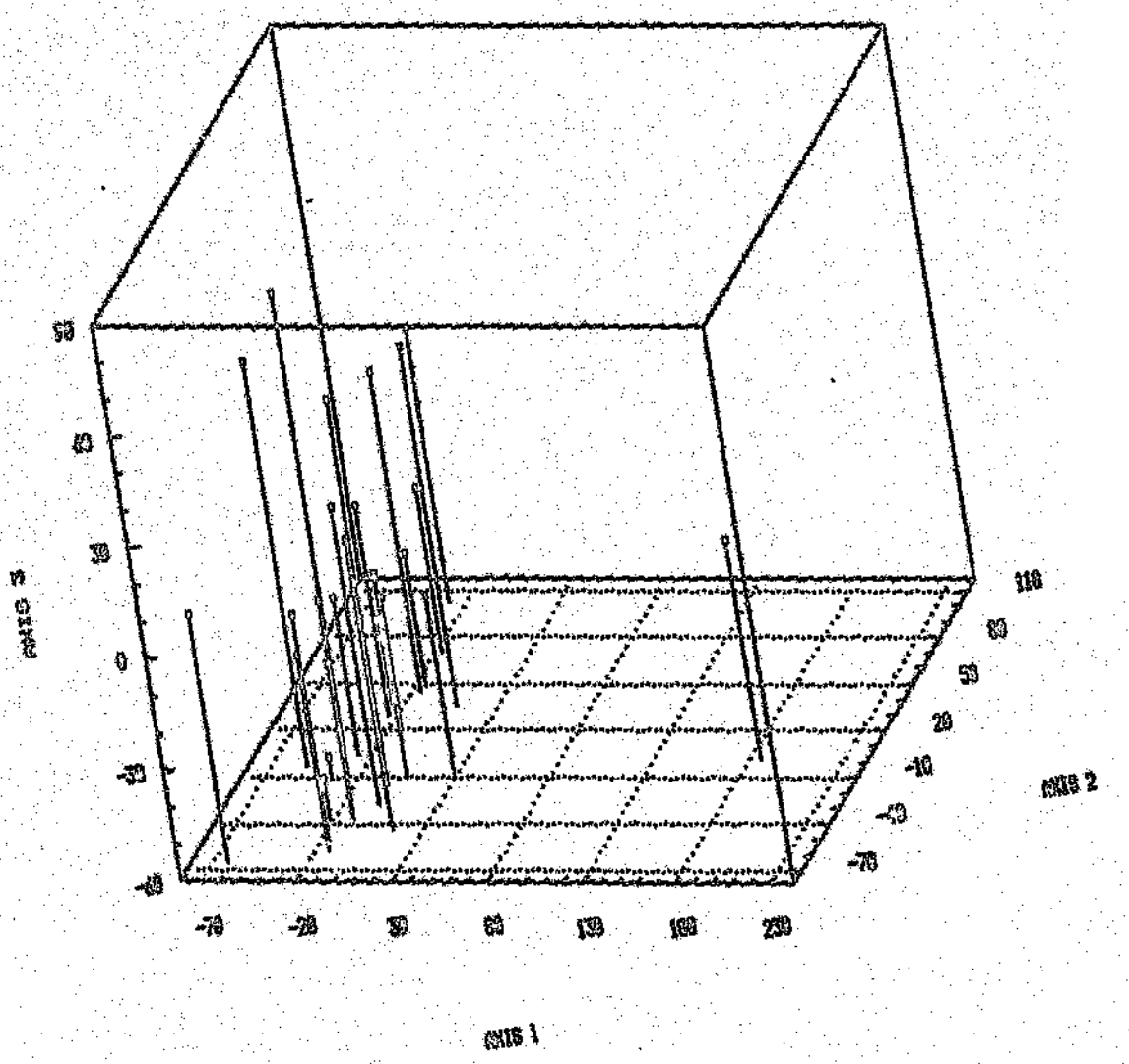

Figure 15. Plot of the first three detrended correspondence analysis axes in ecological space, for the baseline survey, where points are the location of plots.

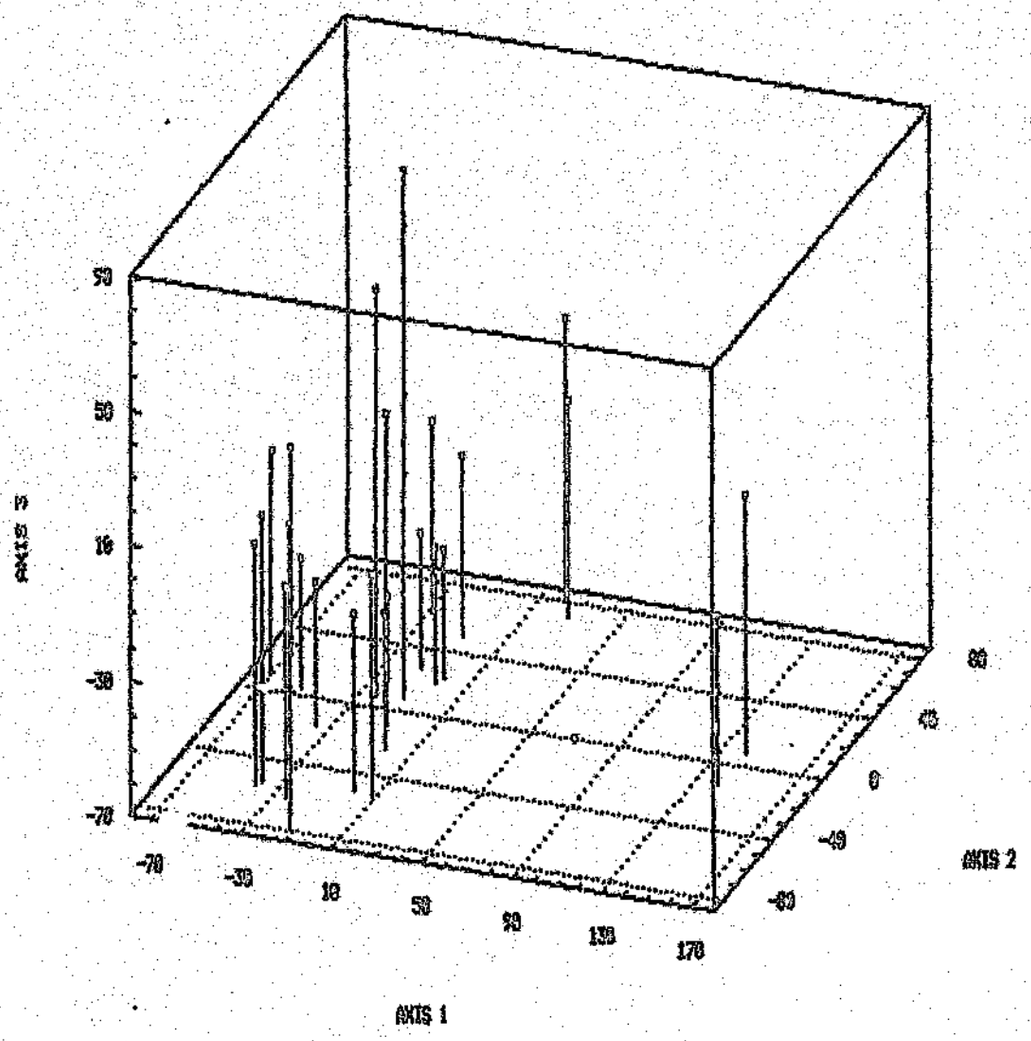

Figure 16. Plot of the first three detrended correspondence analysis axes in ecological space, for the follow-up survey with 0% change, where points are the location of plots.

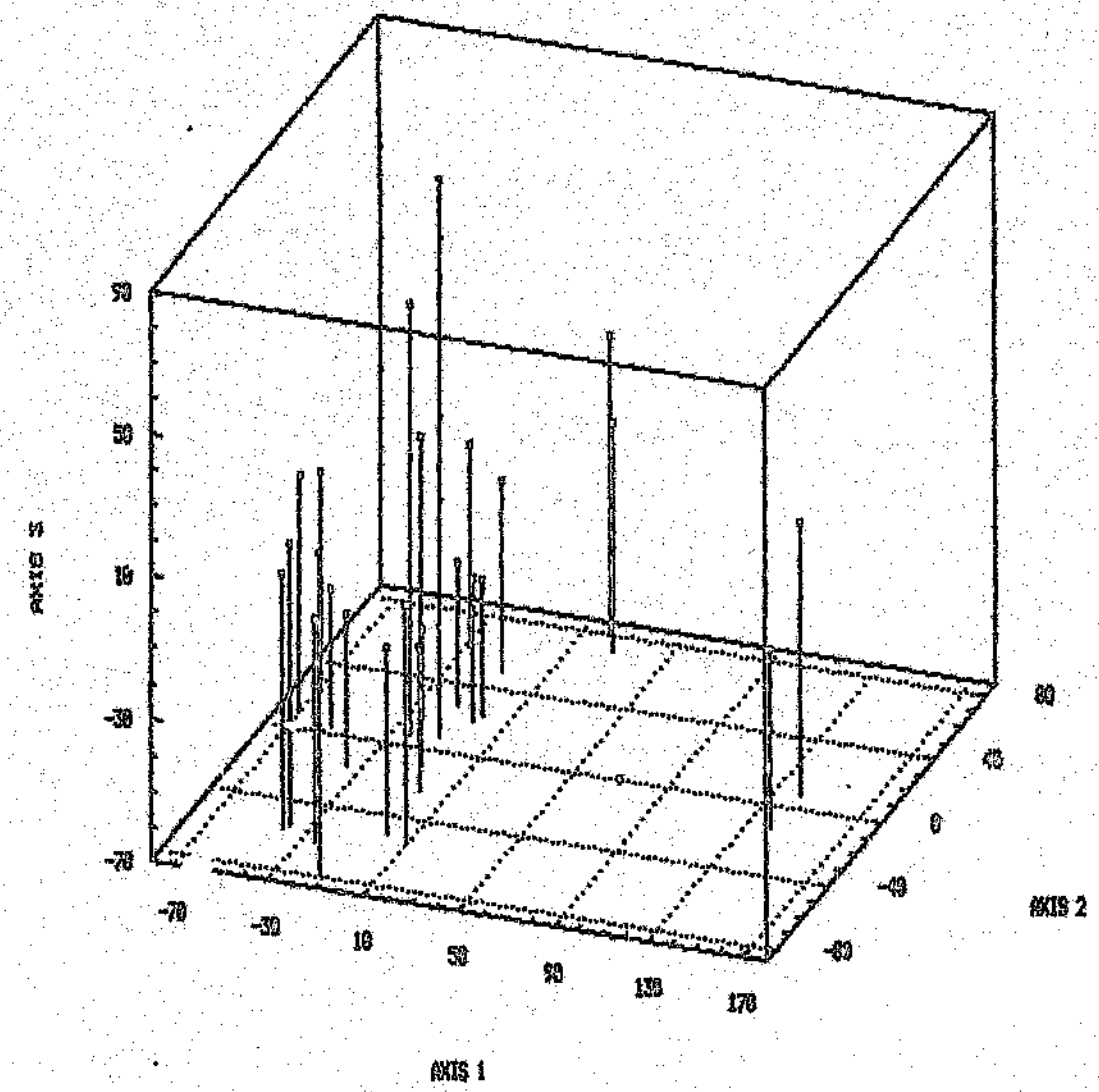

Figure 16. Plot of the first three detrended correspondence analysis axes in ecological space, for the follow-up survey with 0% change, where points are the location of plots.

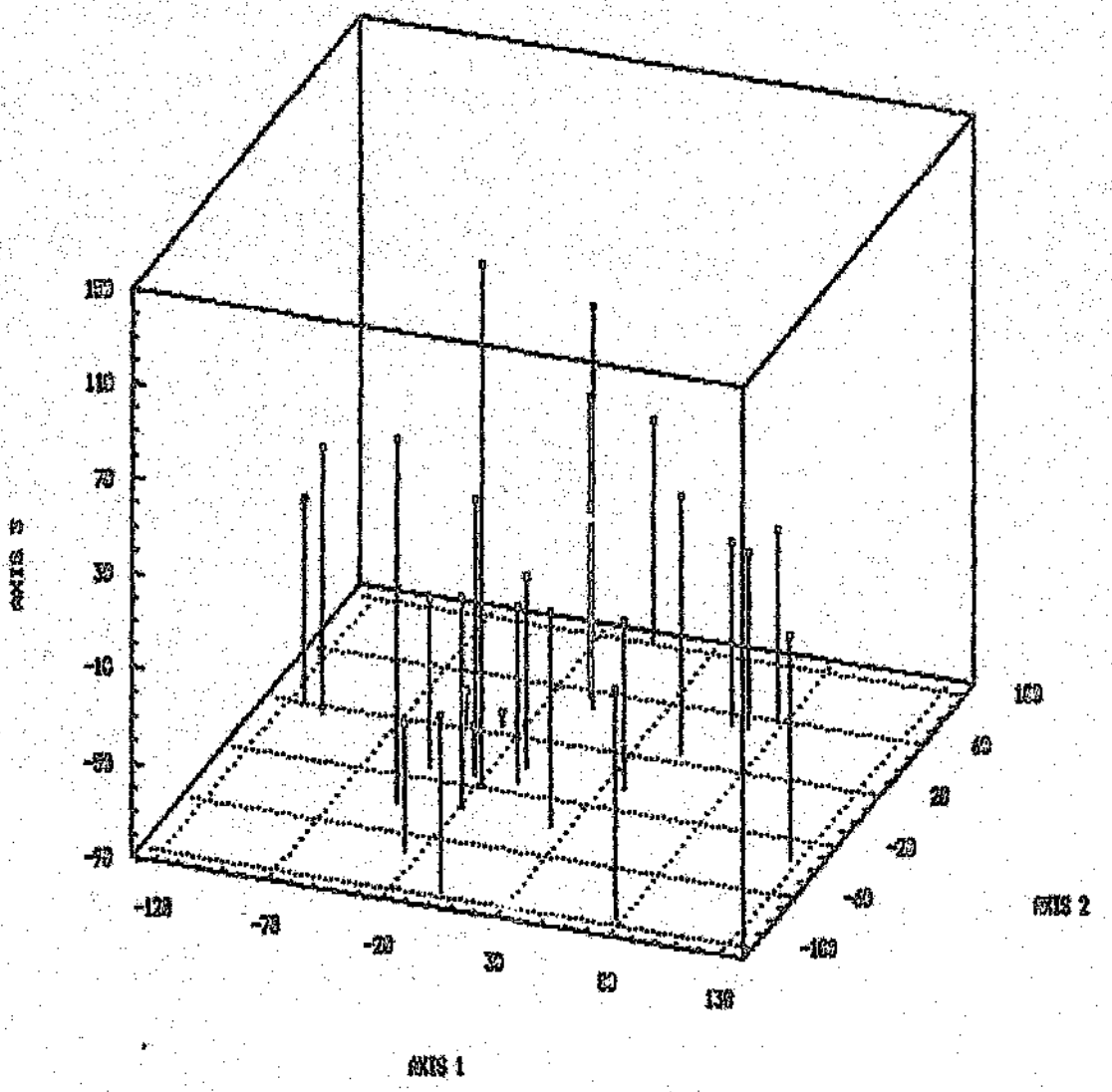

Figure 17. Plot of the first three detrended correspondence analysis axes in ecological space, for the follow-up survey with 10% change, where points are the location of plots.

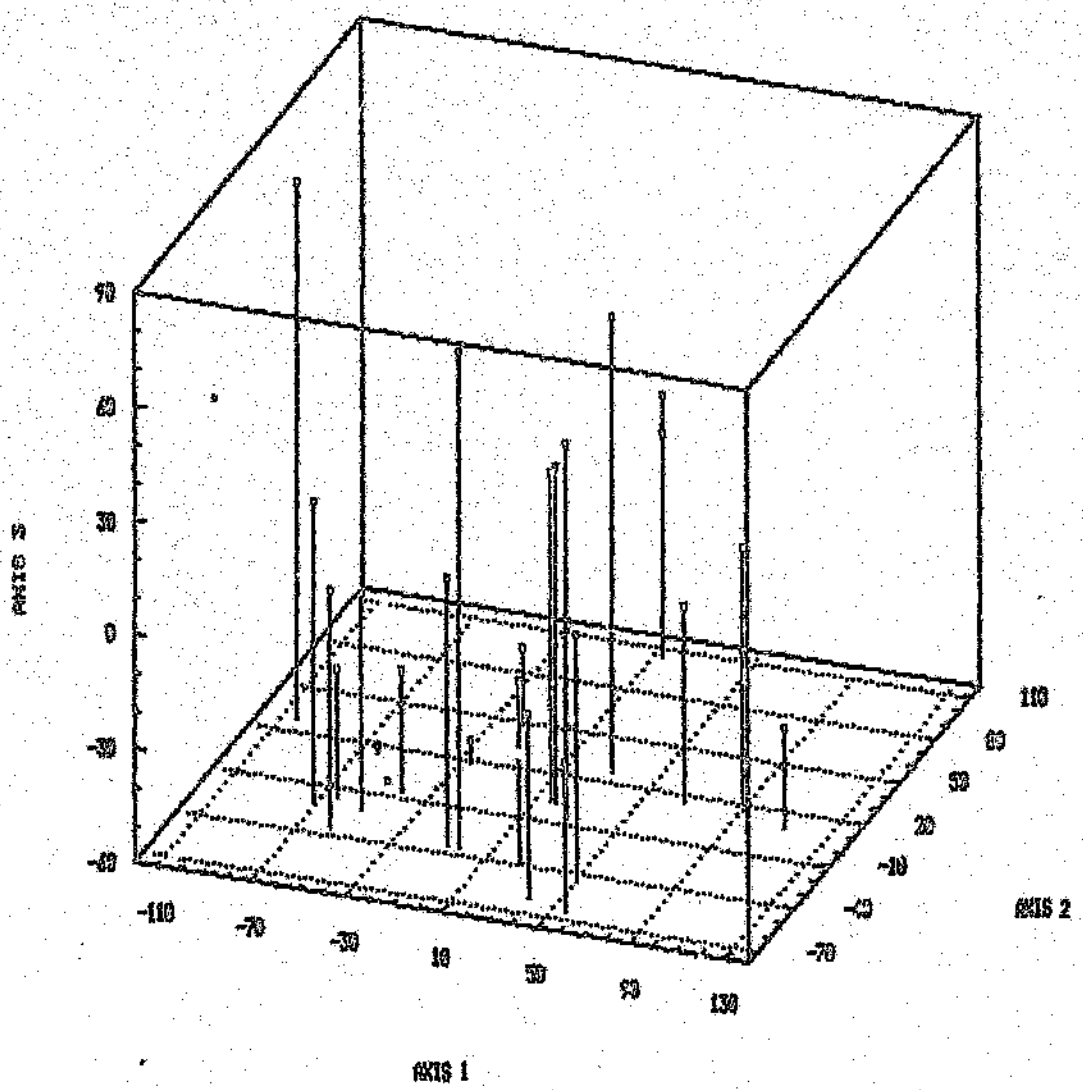

Figure 18. Plot of the first three detrended correspondence analysis axes in ecological space, for the follow-up survey with 20% change, where points are the location of plots.

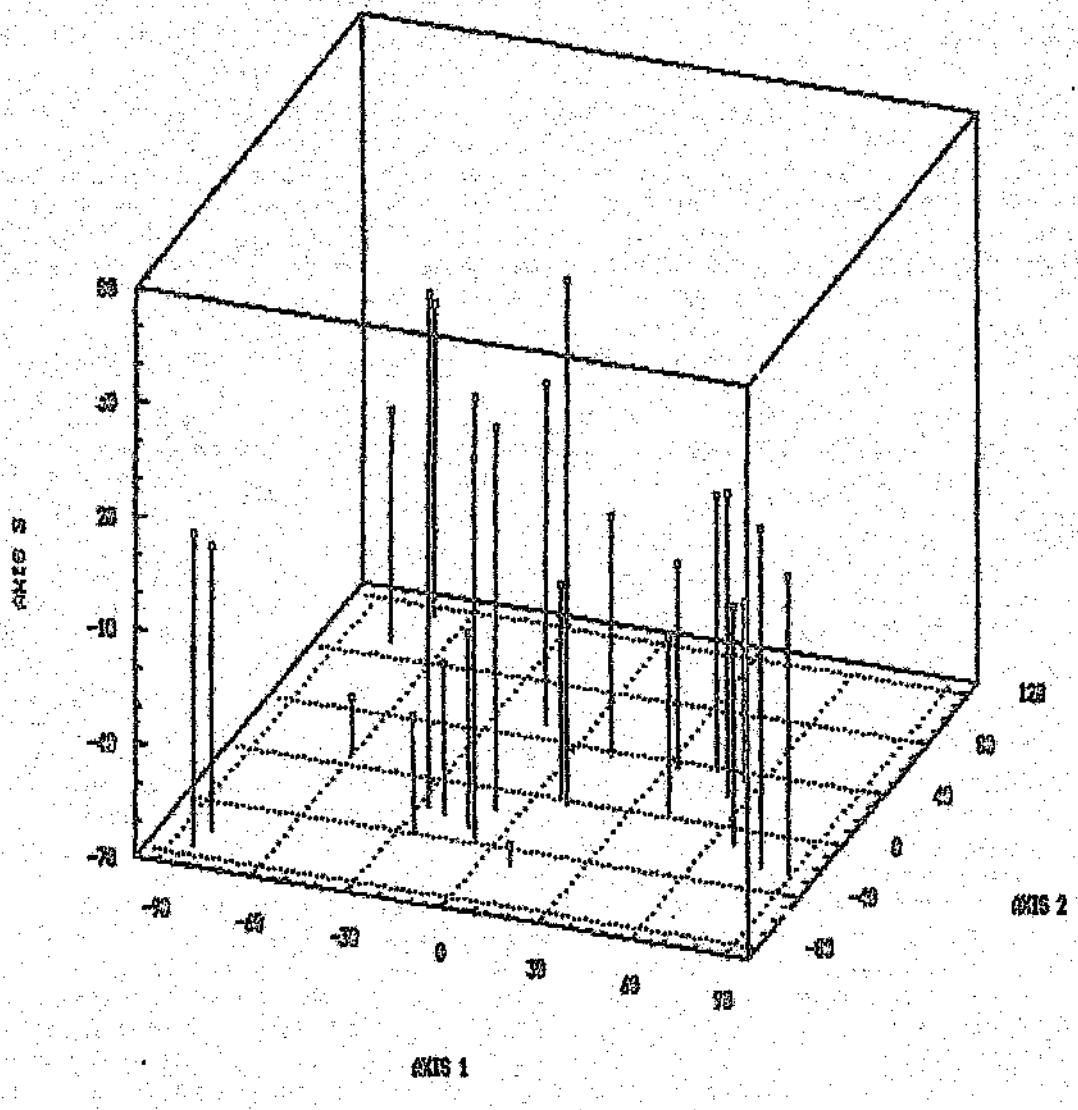

Figure 19. Plot of the first three detrended correspondence analysis axes in ecological space, for the follow-up survey with 40% change, where points are the location of plots.

3.5 DISCUSSION

3.5.1 SIMILARITY COEFFICIENTS

It is important in a monitoring context that a biologically significant change is determined to be real, which depends on the sensitivity and power of the test of Ho between baseline and follow-up surveys. A satisfactory degree of sensitivity and power was obtained at the 90 and 95% confidence levels, yielding meaningful results in which true change was detected. At lower confidence levels the sensitivity of the test was reduced through the commitment of Type I errors and at higher confidence levels the power of the test was reduced through the commitment of Type II errors.

A 90% confidence level may appear to be low, but within a monitoring context concurs with Hinds' (1984) suggestion of setting both error rates higher than the traditional 1% or 5% used for the Type I error. In ecological field studies such as this one, conditions are largely uncontrollable, sampling is difficult particularly in rugged terrain, coefficients of variation are large and one has little certainty of underlying distributions and penalties of error. Hinds (1984) therefore suggests equal error rates of 10% or even 15%. In light of this suggestion and the results obtained a 10% error rate is accepted for this procedure.

A possible shortcoming of the procedure, is that a 10% change between the baseline and follow-up survey was not proclaimed at the 90% confidence level, when such change did in fact occur through simulation. This, in a monitoring context, is the commitment of a Type II error as described by Hinds (1984). However, it is important to ascertain whether a 10% change is biologically significant in terms of the objective for the area and taking into consideration the inevitable noise in the data. The noise is considered to be high, due largely to incorrect identification of species without inflorescences which necessitated identification being based only on vegetative characteristics. In terms of the objectives for the WWA and the probable high level of noise in the data, a 10% change is considered not to be a biologically real change and in this sense does not detract from the power of the test.

A significant disadvantage of the use of similarity coefficients in testing a Ho within a monitoring context, is that the analysis does not facilitate the identification of the cause of change. The VMW (Mentis 1988) suggest that the determination of the nature and direction of change is an important consideration, particularly for the prescription of remedial management measures. However, it is

crucial that a monitoring system should serve as an early warning device (Hinds 1984), detecting change before it becomes serious or far advanced.

This procedure , due to its simplicity and the biologically meaningful results and satisfactory level of sensitivity and power achieved through a minimum sampling intensity (n = 11), is suitable as a credible, cost-effective early warning procedure, but needs to be combined with a technique for identifying the nature and direction of change.

3.5.2 ORDINATION

The results indicate that this procedure, in terms of an early warning device, has an inadequate combination of sensitivity and power, yielding results that are generally not credible or biologically meaningful. Additionally the procedure has a possible weakness in that the reversed polarity of the axes to be compared were re-aligned by taking the mirror image of the first axis of the follow-up data. This runs the risk that the axis were not exactly re-aligned in terms of the scale and origin constants of the marker plots. Further disadvantages of this procedure are, (1) the high sampling intensity required thereby reducing the cost-effectiveness of the technique, (2) the extensive data manipulation necessary to arrange the data in the cornell condensed format (Ter Braak 1988) required for the ordination and (3) the expense in terms of computer time required for multiple ordinations.

An important advantage of this procedure is that it facilitates the determination of the nature and cause of change. Additionally this can easily be assisted by TWINSPAN (Hill 1979b) a classification algorithm, as the format required by TWINSPAN, DECORANA (Mohler 1987) and CANOCO (Ter Braak 1988) is the same, and all three techniques use the reciprocal algorithm as a base. Classification enables a comparison with the environmental and other factors effecting the composition of vegetation which in turn leads to the generation of hypotheses about the causes of the composition of the stands as they were sampled (Greig-Smith 1983). SIMCA (Greenacre 1986) a program for simple correspondence analysis is another ordination technique that facilitates the determination of the nature and causes of change and has the added advantage of a very simplified data input format in comparison to DECORANA, CANOCO and TWINSPAN.

A combination of these methods allows for an environmental interpretation of the ordination axes, which could then be tested through active adaptive management (Holling 1978; Walters and Hilborn 1978) or deferred action (Mentis 1984). However McNaughton (1983) suggests that it is not yet possible to separate all individual effects encompassed in an ordination axis, as such an axis often represents

of this phase of the study was therefore to develop a practical procedure for translating an objective into operational goals and subsequently prioritising such goals.

4.3 PROCEDURE

An initial procedure was adapted from an approach by Shafer and Davis (1989) for making decisions about environmental management. This procedure was tested in a workshop format on a hypothetical reserve. From this workshop a revised procedure was developed which was subsequently refined through application on a Private Nature Reserve and on two Provincial Reserves. The present version of the procedure comprises the following 9 steps.

1) Develop resource inventory lists.
2) Define an overall objective/s.
3) Select panelists.
4) Individually list biotic components requiring specific management and combine the individual lists into a single overall list.
5) Refine the overall list into a final list.
6) Present background information on the listed biotic items.
7) Compare each item on the final list with every other and calculate the priority score of each listed item.
8) Calculate the consistency coefficient of each panelist.
9) Re-phrase each listed item into an operational goal.

To establish the full implication of the overall procedure each step is discussed in detail.

Step 1 Develop resource inventory lists

To set goals for a specific area, it is desirable to know *a priori* what resources occur within the area under question. Obviously an expansive understanding of the resources at the outset will elicit a more comprehensive and meaningful final set of management goals and priorities. However, the lack of comprehensive resource list does not denote that goals cannot be defined but simply implies that goals set on limited resource data will require re-evaluation, depending on the rate at which our understanding of the resources and the functioning of the system under management improves over time.

The Kendall coefficient of consistency has an expected value of 0 at maximum inconsistency, when responses are assigned at random, and 1 when no inconsistencies are present. Therefore a K of 0.5 means that half the triadic relations are inconsistent and a K of 0.2 would mean that four fifths of the relations are inconsistent (Ferguson 1976).

Step 9 Re-phrase each listed item into an operational goal

In the majority of cases where nature conservation is the applied form of land use, the time scale involved in management is longer than for most other forms of land use. Additionally the limits pertaining to the specific goals are often unknown or difficult to define, making the final re-phrasing of the listed item into an operational goal a difficult task. In this final step the requirements of an operational goal must be incorporated as far as possible. Where limits are unknown or difficult to define, this should be indicated.

4.4 RESULTS

A specimen set of results are presented to illustrate the procedure. These results are from the application of the procedure during the developmental phase as applied to a Provincial Nature Reserve, and are subsequently based on a limited panel of only five individuals.

Resource inventory lists as stipulated in step 1 had already been compiled and an overall objective (step 2) had previously been defined. Within the constraints of the overall objective a list of biotic factors considered to be important to conserve was drawn up by each panelist. From the individual lists the following combined list was developed (step 4).

1) Maintain the existing plant communities.
2) Manage a viable population of Sable.
3) Manage a viable population of White Rhinoceros.
4) Introduce Hippopotamus.
5) Eradicate/control Nyala.
6) Maintain species richness of birds.
7) Maintain species richness of reptiles.
8) Conserve a population of Crocodiles.
9) Conserve/maintain indigenous fish species.
10) Conserve/maintain large predators.
11) Manage Impala.
12) Conserve viable populations of ungulate species associated with the present vegetation without conflicting with higher priority ungulate species.
13) Maintain species diversity within plant communities.
14) Conserve threatened plants.
15) Conserve/maintain suitable habitat for game species.
16) Control bush encroachment.
17) Control aliens.
18) Conserve specific threatened invertebrate species.
19) Conserve small mammals.

This above list was refined, through debate, into a final list of 12 items (step 5) by the removal of correlated items and items that are actually the means by which other items are to be achieved.

a complex gradient. Mentis (1984, 1988) suggests in the case of complex axis that the results of an inductive technique such as ordination, provide the basis for formulating testable hypotheses about gross cause and effect relations.

This procedure possibly has limitations as an early warning device, but is obviously important for determining the nature and cause of change. A wise combination of this and the previous procedure would result in a complete monitoring system, satisfying the requirements of an early warning device and determining the nature and cause of change. Such a combination is proposed in chapter 5.

3.5.3 CONCLUSION

The objective of this chapter was to test through an iterative process of baseline and follow-up surveys, the sensitivity and power of two monitoring procedures to known levels of vegetation change, under increasing sampling intensity.

Sensitivity is described in terms of avoidance of a Type I error, which in a monitoring context means a change is proclaimed when no change exists. Power is described in terms of the ability to avoid Type II errors, which means that no change is declared when a change does in fact exist.

The baseline data was collected from a 43.5ha site using the wheel point apparatus to record the nearest rooted living plant to each of 200 points per 40 X 40m plot. 60 such plots were randomly located. The follow-up survey was executed immediately after the baseline survey, before any change in the vegetation could possibly have occurred. The follow-up data was then artificially changed by 10, 20 and 40% to yield four sets of follow-up data.

The baseline and each follow-up set of data, with a known degree of change, were compared through the testing of a null hypothesis (Ho) which stated that there was no significant difference between the two. Ho was tested through two different analysis procedures , namely a similarity coefficient procedure based on the Sorenson quantitative index and an ordination procedure based on the frequency distribution of samples along the primary ordination axis, using DECORANA.

For the similarity coefficient procedure a satisfactory degree of sensitivity and power was obtained at the 90 and 95% confidence levels, yielding meaningful results. At lower confidence levels the commitment of a Type I error increased, resulting in low sensitivity. At higher confidence levels power was reduced through the commitment of Type II errors. The similarity coefficient procedure is suitable

as a credible, cost-effective early warning procedure, but has the disadvantage that it does not facilitate the identification of the nature and cause of change.

The ordination procedure suffers from an inadequate combination of sensitivity and power at the confidence levels tested (80, 90, 95 & 99%), yielding results that are generally not credible. This procedure is clearly inappropriate for an early warning device, but is important as an inductive procedure for improving our understanding about the nature and cause of change. Such an understanding is obviously essential if remedial management measures are to be applied.

To achieve a complete monitoring system that (1) detects change before it becomes serious or far advanced and (2) facilitates the identification of the nature and cause of change, a wise combination of these two procedures is suggested.

CHAPTER 4 MANAGEMENT OBJECTIVES AND GOALS

4.1 INTRODUCTION

Management is not an end in itself, but a means by which specific ends or objectives are achieved (Miller and Child 1983). Monitoring is directly related to the objectives of an area, and is a means to test the degree of achievement of or departure from such objectives. It is important to recognize that both objectives and monitoring are central to scientific management (Figure 1 page 6) as described by Mentis (1984). This is frequently forgotten or not perceived, and has been identified by the WMW as a generic weakness of vegetation monitoring in South Africa (Mentis 1986).

In this study much effort has gone into the development of a monitoring system under the paradigm of the WMW. To ensure the full benefit of this system within the WMA, it is necessary to translate the set objective into operational goals. This will enable the important assessment of whether change identified through the monitoring system falls within the permissible limits of the system, as discussed in Chapter 1 (section 1.2 page 4). This chapter describes a procedure for translating an objective into operational goals and prioritising such goals.

An objective is a statement of what is wanted or expected from or intended for a system. To manage without objectives is a contradiction in terms and can be described as an aimless activity (Mentis 1984; Miller and Child 1983; Mentis and Collinson 1979; von Gadow 1978). Objectives are usually broadly stated and not controllable because the degree of attainment cannot be measured (von Gadow 1978), and therefore need to be translated into operational goals.

Goals are of real, practical value in that they contribute to efficient management by providing the basis for rational planning. According to von Gadow (1978) a goal is operational if it is possible to observe or measure how well it is being achieved. Stated more precisely, a goal is operational if it is (1) realisable or possible to achieve, (2) measurable, in other words the degree of attainment can be measured and (3) attainable, in that the time within which it must be attained is realistic and specified.

4.2 OBJECTIVE

A central requirement for the implementation of a monitoring system is that correctly identified and formulated goals exist. The objective

Step 2 Define an overall objective/s

In cases where an overall objective already exists, this procedure should aim at interpreting this objective in operational goals ensuring that the policy directives implicit in the objective are maintained. Where a formal objective has not been defined a statement of what the landowner or custodian of the property wants or expects must be clearly and precisely defined. This statement then serves as the overall objective.

Step 3 Select panelists

Shafer and Davis (1989) recommend that the panel should be comprised of knowledgeable people to make judgments about the importance of the activities to be evaluated. The knowledge or expertise of each individual panelist should relate to the reserve under discussion in terms of the resource inventory lists, the set objectives and the management applied or required to achieve such objectives.

Step 4 Individually list biotic components requiring specific management and combine the individual lists into a single overall list

This step ensures that the individual panelists have the opportunity to adequately express their opinion and concerns, in terms of their expertise. The individual lists are then consolidated into a single comprehensive list, encompassing the broad expertise of the panel.

Step 5 Refine the overall list into a final list

The comprehensive list from step 4 usually contains correlated items which need to be removed. For example the "maintenance of the proportional composition of small mammals" is assumed to be correlated with the "maintenance of vegetation species diversity, proportional composition and distribution". In other words the small mammals can be indirectly managed through direct management of the vegetation and the small mammal item should be removed from the list. Additionally listed items which are in fact the means by which other listed items are achieved, should be removed. For example the "control of bush encroachment" may be a means of "maintaining a particular plant community".

Step 6 Present background information on the listed biotic items

Each item remaining on the final list is presented by the panelist who is the expert in the particular field. It is important that background theory and the latest understanding be addressed and in the case of individual species the present status, distribution and

threats need to be highlighted. This type of information is necessary to enable the individual panelists to make an honest, objective judgement about the importance of the items to be evaluated.

Step 7 Compare each item on the final list with every other and calculate the priority score of each listed item

In this step the procedure of Shafer and Davis (1989) is closely followed. This procedure is based on the paired comparison method for which Ferguson (1976) and Bock and Jones (1968) present a mathematical basis. In the paired comparison method a choice is made on the importance of each item when compared with every other item. This method is accepted as yielding a more reliable ordering than dictatorially by a single individual (Ferguson 1976) and probably a more reliable ordering than democratically by a group. The choice of importance between paired items is made on the basis of different dimensions of qualitative and quantitative benefits (Shafer and Davis 1989; Ferguson 1976). Ferguson (1976) clearly explains the different dimensions using coloured cards. A red card may be preferred to a blue and a blue to a yellow on the basis of hue. The yellow may be preferred to the red on the basis of saturation. Clearly a different dimension is used as a basis of choice.

Each panelist completes a survey form (table 25) scoring only the half of the matrix above the diagonal. In completing the form a 1 is scored in the cell if the column item is judged to be more important than the row item. A 0 is scored if the row item is judged to be more important than the column item and 0.5 is scored if the column and row items are judged to be of equal importance.

In order to avoid conflict between the various goals applicable to a specific area and to facilitate management, it is important that the goals are prioritised. The procedure of Shafer and Davis (1989) was followed, where the priority score is based on the proportion of times the column item was judged more favourable than the row item and is calculated using table 26 according to the following formulas.

1)
$$P1 = \sum_{i=1}^{f} \frac{Xi}{N}$$

where P1 = pairwise comparison values for the upper off diagonal cells

Xi = the individual panelist score for a paired comparison (table 25)

f = the total number of paired comparisons

N = the number of panelists

2) $$P2 = 1 - P1$$

where P2 = the corresponding lower off diagonal cell to P1

3) For each column the P1 and P2 values are summed to yield C

4) The column totals (C) are summed to yield D

5) $$PR_i = \left(\frac{C_i}{D}\right)1000$$

where PR_i = final priority score for the ith column

Step 8 Calculate the consistency coefficient of each panelist

Due to the different dimensions on which paired comparisons are made inconsistent responses may arise. Ferguson (1976) notes that where inconsistencies are high the ordering attached to the items may be questionable. A coefficient of consistency is based on the number of inconsistent triplets, or triads of choices. For example if A is considered to be more important than B it is convenient to represent this choice by the notation A -> B and a choice of B to A as B -> A. The sequence A -> B -> C -> A is an inconsistent triad (Ferguson 1976).

The Kendall coefficient of consistency (Kendall 1970) is calculated from the survey form (table 25) using

$$K = \frac{12\sum\left(R - \bar{R}\right)^2}{N(N^2-1)} \qquad \text{when N is odd}$$

and

$$K = \frac{12\sum\left(R - \bar{R}\right)^2 - 3N}{N(N^2-4)} \qquad \text{when N is even}$$

where K = Kendall's coefficient of consistency

R = row sum

$\bar{R}$ = the mean of the row sums which is = $\frac{\Sigma R}{n}$

N = the number of items to be compared

Table 25. Matrix for individual panelist scores.

	1	2	3	4	5	6	7	8	9	10	11	12	13	14	15	16	17	18	19	20
1	X			Xi																
2		X				Xi														
3			X																	
4				X																
5					X															
6						X														
7							X													
8								X												
9									X											
10										X										
11											X									
12												X								
13													X							
14														X						
15															X					
16																X				
17																	X			
18																		X		
19																			X	
20																				X
Σ																				

RULES

Score 1 if column item is judged more favourable than the row item.
Score 0 if row item is judged more favourable than the column item.
Score 0.5 if column and row items are judged to be of equal importance.

Table 26. Matrix for calculating overall priority scores

	1	2	3	4	5	6	7	8	9	10	11	12	13	14	15	16	17	18	19	20
1	X			P1																
2		X				P1														
3			X																	
4	P2			X																
5					X															
6		P2				X														
7							X													
8								X												
9									X											
10										X										
11											X									
12												X								
13													X							
14														X						
15															X					
16																X				
17																	X			
18																		X		
19																			X	
20																				X
Σ	C																			
	PR																			

Σ =

1) Optimise Sable habitat.
2) Conserve viable populations of ungulate species associated with the present vegetation without conflicting with higher priority ungulate species.
3) Manage White Rhinoceros for sustained offtake.
4) Introduce Hippopotamus.
5) Maintain species diversity within existing plant communities.
6) Conserve rare and endangered species.
7) Identify habitat for the introduction of other endangered ungulate species.
8) Maintain a viable Crocodile population.
9) Provide a proportion of carcass off-take for avian scavengers.
10) Eradicate Nyala.
11) Protect breeding sites of selected bird species of special conservation concern.
12) Maintain/increase indigenous fish diversity.

Experts covering the field of listed items presented background information. The individual panelists then compared each item on the final list with every other, from which the following priority scores were calculated.

	ITEM	PRIORITY
1)	Maintain species diversity within existing plant communities.	155.4
2)	Conserve specific threatened plant species.	127.1
3)	Conserve viable populations of ungulate species associated with the present vegetation without conflicting with higher priority ungulate species.	107.3
4)	Optimise Sable Antelope habitat.	107.3
5)	Manage White Rhinoceros for a sustained offtake.	96.0
6)	Identify habitat for the introdurtion of other endangered ungulate species.	87.6
7)	Eradicate Nyala.	67.8
8)	Maintain/increase indigenous fish diversity.	45.2
9)	Provide a portion of carcass off-take for avian scavengers.	42.4

10)	Protect breeding sites of selected bird species of special conservation concern.	39.5
11)	Maintain a viable crocodile population.	36.7
12)	Introduce Hippopotamus.	19.8

The Kendall coefficient of consistency (K) was calculated for each panelist to assess their objectivity in the comparison of the listed items. The following results were obtained.

PANELIST	(K)
A	0.8
B	0.7
C	0.7
D	0.6
E	0.5

From these results it became evident that panelists D and E were biased towards game at the expense of vegetation management.

Finally the prioritised items were, in accordance with the limited expertise represented on the panel, the following operational goals.

	ITEM	PRIORITY
1)	Maintain and where necessary improve the existing within and between site vegetation species diversity, within set limits to meet the minimum condition of preserving soil.	155.4
2)	Conserve viable populations of rare and endangered species, within the limits set to meet the minimum condition of preserving soil.	127.1
3)	Maximise the proportional species composition of game associated with the present vegetation condition without conflicting with priority ungulate species.	107.3
4)	Manage a viable population of Sable Antelope. (Expert advice required)	107.3
5)	Manage White Rhinoceros for a sustained offtake. (Expert advice required)	96.0
6)	Identify habitat, within the set vegetation limits to meet the minimum condition of preserving soil, suitable for other endangered ungulate species.	87.6
7)	Eradicate Nyala.	67.79

8)	Maximize the indigenous fish diversity and abundance. (Expert advice required)	45.2
9)	Provide a portion of carcass off-take for avian scavengers. (Expert advice required)	42.4
10)	Protect breeding sites of selected bird species of special conservation concern. (Expert advice required)	39.5
11)	Maintain a viable crocodile population. (Expert advice required)	36.7
12)	Introduce Hippopotamus. (Expert advice required)	19.8

4.5 DISCUSSION

The procedure is a combination of a synthesis phase (steps 1 to 4) and an analytical phase (steps 5 to 9). This combination encourages and conceptualises intuitive thought, which is then directed through analytical thought to an end result based on a holistic appraisal of the system under question, giving the procedure a wide range of application.

The practicality of the paired comparison method is inherently limited by the number of items that can be compared, which is calculated by

$$f = \frac{n(n-1)}{2}$$

where f is the number of paired comparisons and n the number of items being compared. Between 15 to 20 items is considered to be a practical limit which would result in 105 to 190 comparisons.

It is important to realise that however effective the procedure is the end result reflects only the knowledge and judgement of the panelists. Clearly the selection of the panelists is crucial and their combined expertise should cover the items to be compared. The consistency coefficient (K) is a means of testing the objectivity and judgement of the individual panelists. A K of 0.65 is proposed as a meaningful cut off level at which point 65% of the relations are consistent. The consistency coefficient results should be discussed with the panel, particularly those with a K < 0.65, to identify possible bias in the comparison of items due to misunderstanding of the intention or implications of the listed items. After such discussion the comparison of the listed items (step 7) should be repeated, and the Kendall coefficient of consistency again calculated. This process should be repeated until each panelist is satisfied that he has fully

understood the implications of each item and judged their importance honestly and objectively. If at this stage an individual panelist still has a K < 0.5 he should be excluded form the panel.

A further aspect which can noticeably affect the end result, is the degree to which the entire exercise was executed within the constraints of the overall objective. This is obvious as the aim is to translate the objective into meaningful goals, but nonetheless often forgotten.

In the final analysis, the success of the procedure does not depend on the expertise of the panelists or the degree by which the constraints of the objective were adhered to, but depends on management acting on the priority scheme developed (Shafer and Davis 1989). To assist managers in taking the necessary action the goals defined should according to Miller and Child (1983) be formalised by means of specific policy directives which should indicate to staff at all levels the administrative, planning, research and management options available. Furthermore the realization of a goal often depends on its relation with other goals. This relationship can be of three types as follows (Miller and Child 1983; von Gadow 1978),

1) complementary, where the attainment of the one facilitates or causes the attainment of another,
2) indifferant, in that the attainment of one has no influence on the attainment of another,
3) conflicting, where the attainment of one causes a decrease in or difficulty with the attainment of another.

Due to these three types of relationships between goals a goal grading system is necessary. An example of such a system is as follows, where a goal

1) dominates the entire area,
2) dominates part of the area only,
3) shares dominance over all or part of the area,
4) is secondary over all or part of the area,
5) is not applicable.

Management should be applied according to the priority of the goals within whatever grading system is implemented. Similarly aspects requiring research, highlighted through the derivation of goals, will also depend on the goal priorities and grading system applied.

Finally this procedure for defining goals and their priority is not regarded as definitive, but rather as a practical aid that will be further refined through use.

4.6 CONCLUSION

Monitoring within a resource management context is primarily a means of assessing the attainment of objectives. An objective is usually a broad statement of expectation or intent that is generally not controllable, as the degree of attainment cannot be measured. It is therefore desirable for an objective to be translated into more precise terms or goals that are both testable and attainable.

As the selection or setting of objectives and goals is a matter of choice, a need exists to develop a method for guiding such choice. Furthermore to avoid conflict between the different goals derived it is necessary to arrange the goals in an order of priority. This chapter aimed at developing a procedure based on a holistic appraisal of the system under question, through the combination of an intuitive and an analytical approach.

The developed procedure is comprised of the following nine steps, starting from broad resource inventory lists and culminating in specific biotic aspects considered important to conserve.

1) Develop resource inventory lists.
2) Define an overall objective/s.
3) Select panelists.
4) Individually list biotic components requiring specific management and combine the individual lists into a single overall list.
5) Refine the overall list into a final list.
6) Present background information on the listed biotic items.
7) Compare each item on the final list with every other and calculate the priority score of each listed item.
8) Calculate the consistency coefficient of each panelist.
9) Re-phrase each listed item into an operational goal.

The calculation of the priority score is based on the pairwise comparison procedure of Bock and Jones (1968), whereby each item is compared with every other in terms of their importance. The consistency of the individual panelists in their judgement of the importance of each item is calculated by the Kendall coefficient of consistency, with an expected value of 0 at maximum and 1 at minimum inconsistency. This is useful in identifying possible bias or misunderstanding, with either the procedure or the implications of the listed items, amongst the panelists.

The procedure is considered to be practical with a broad range of application, particularly satisfying an important need in the implementation of a vegetation monitoring system.

CHAPTER 5 IMPLEMENTATION

5.1 INTRODUCTION

The success of a monitoring system does not depend on its efficiency alone, but also on management's implementation of the developed system. This point is emphasised by de Beer (1990) who states that if research is the gateway to new-found knowledge then the optimal implementation of that knowledge is the first step on the road towards gaining a competitive edge for the future.

The importance of the implementation of research findings has recently been given much attention. In this context the following provisional description of "implementation" was formulated by Gouws (1990):

> Implementation of research findings has taken place when the target group identified for the research utilises the research findings (and/or the associated skills and facility of the researcher) in the planned manner and within the planned time interval, as is shown by their concrete actions.

Evidently the view that the researchers job ends with the completion of the technical investigation and the submission of a research report is no longer acceptable. The latest opinion is that researchers can and should take active personal responsibility for the successful implementation of their research findings (Gouws 1990; Te-Hsuing Sun 1990; Twiss 1990; Caplan 1990).

Due to this recent implementation philosophy and the aspiration for the future management of the WWA to gain a competitive edge this final chapter encompasses the research findings of this study in practical procedural guide-line, aimed specifically at the manager. The procedure is explained through a case study which involved a baseline survey during summer 1987 and a follow-up survey one year later.

5.2 PROCEDURAL GUIDE-LINE

The format of the procedural guide-line is based on the following sequence of decisions that underlie the monitoring system

1) define operational goals,

2) select representative management blocks from the total number of blocks,

3) stratify each selected block into land facets, and identify the facets to be monitored,

4) trace a 1:10 000 scale map of the land facet to be monitored and measure the surface area,

5) calculate, based on the area, the required number of sample plots per facet,

6) on the traced land facet map randomly allocate the required number of sample plots for the baseline survey,

7) execute the survey at the recorded time after a burn,

8) locate the actual position of the sample plots in the field,

9) record, using the wheel point apparatus, the nearest rooted living plant to the required number of points,

10) capture the data on computer,

11) analyse the data according to the procedure of the early warning device,

12) after the defined period implement the follow-up survey by repeating steps 8 to 11,

13) compare baseline and follow-up surveys,

14) analyse the baseline and follow-up data with a view to identifying causes of change.

These decisions have been incorporated into a monitoring procedure flow diagram (figure 20) for the WWA. The logic behind this sequence of decisions and the specific theory related to each decision is important, and each step is therefore discussed in detail.

Step 1: Operational goals

An overall objective already exists for the WWA. However, the expected state of the system in terms of the objective has not been defined. Consequently the degree to which the objective is met cannot be assessed, rendering any monitoring as wasted effort. It is therefore essential to translate the objective into testable management goals. This can be done through implementation of the procedure developed in chapter 4.

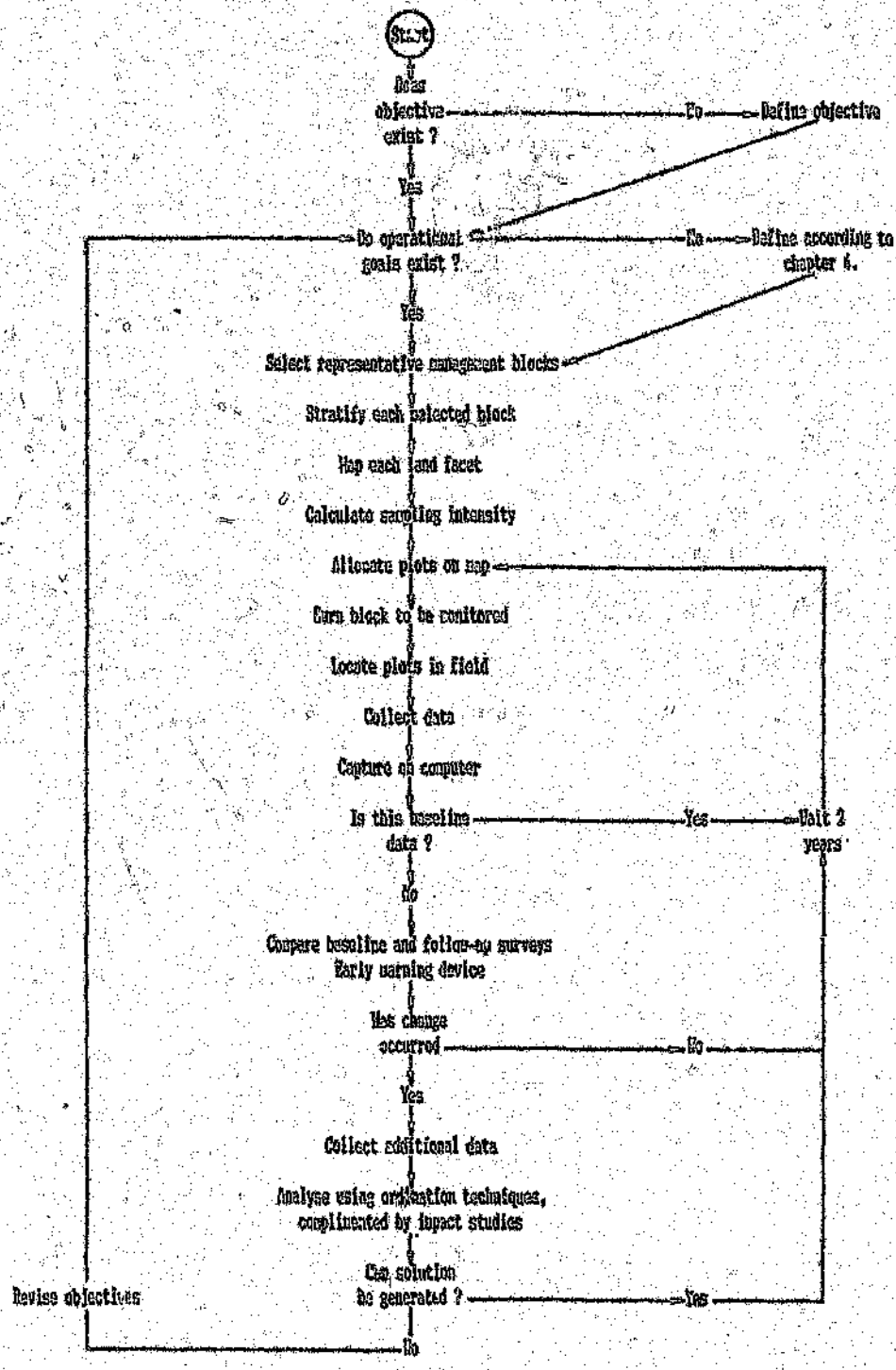

Figure 20. Flow diagram of the monitoring procedure developed for the Walkberg Wilderness Area.

Step 2: Select representative management blocks

It is impossible to monitor everything, particularly in a large rugged area such as the WWA, and representative portions of the total area need to be selected. In this selection it is important that subjectivity be reduced, which is achieved through evaluating each area against the same criteria. The following simple method, based on the existing management blocks, was developed for this purpose and is considered to be adequate.

1) Due to the rugged terrain, many blocks are relatively inaccessible. From a cost-effectivity point of view, each block is classed as inaccessible if it takes longer than two hours to reach.

2) Of the total management blocks, the vegetation physiognomy of some blocks is clearly similar and of other blocks unique. Physiognomy is the general outward appearance of a plant community determined by the life-form of the dominant species.

3) From each group of similar blocks, one representative block must be chosen with a view to incorporating the maximum variability of the group. In this regard the assumption is made that the largest block of the group incorporates maximum variability.

Based on these above criteria, each block is scored as follows.

	CRITERIA		POINTS
1. Accessibility	high		3
	intermediate		2
	low		1
2. Vegetation physiognomy	unique blocks		5
	similar blocks	- largest	5
		- intermediate	3
		- smallest	1

Blocks with a score of ≥ 7 are chosen for sampling.

Step 3: Stratify selected blocks

Large sections within each selected block are either inaccessible or not predominantly grassveld. This necessitates that the total block be sub-divided into smaller accessible units of grassland. For this purpose the following elementary terrain classification procedure is proposed.

1) Delineate and number on 1:10 000 aerial photographs, areas of distinctive pattern according to the following land facets.

Number	Land facet
1	Generally large, flat or gradual concavo-convex slopes of up to 10°
2	Generally medium sized, steeper slopes or valley sides between 11 - 15°
3	Either non grassland areas, inaccessible areas or slopes > 15°

2) Final confirmation of the various land facet bounderies must be accomplished through field reconnaissance.

Step 4: Map each land facet

Trace a boundary map of all type 1 and 2 land facets delineated on the 1:10 000 aerial photographs. Number each map according to the management block and land facet type. Measure, by planimetry, the surface area of each facet.

Step 5: Calculate sampling intensity

Based on the surface area of each land facet , calculate the range of the number of plots required and the associated level of description under the different confidence and asymptotic levels, using the formulas of tables 9, 10 16 and 18 developed in chapter 2, as shown for the case study below.

Table 27. Range of plots required and associated level of description calculated for a study site of 21.3 ha.

	REPLICATE SIMILARITY			REPLICATE ORDINATION					
				95% CONFIDENCE LEVEL			99% CONFIDENCE LEVEL		
	90%	95%	99%	90%	95%	99%	90%	95%	99%
N	10	18	38	24	28	39	29	39	47
D	88.2%	92.8%	96.2%	77.8%	82.8%	87.4%	83.0%	89.3%	94.0%

The final choice of sampling intensity is dependent on previously discussed factors. First, as discussed in chapter 2 page 63, these six factors that influence sampling intensity must be considered. Second, the monitoring system as developed in chapter 3, is comprised

of an early warning procedure and a procedure to facilitate the identification of causes of change. The early warning procedure depends on a smaller sampling intensity predicted through the replicate similarity approach. The identification of causes of change through ordination techniques requires a larger sampling intensity predicted through the replicate ordination approach. Consequently the baseline survey must be conducted at the larger sampling intensity, from which the number of plots required for the early warning procedure can be randomly drawn.

In the case study a maximum of 10 plots was considered to be the optimum possible for the early warning device. This intensity retrieves a satisfactory level of description (88.23%) and was therefore accepted. For the identification of cause of change it was decided that a 95% confidence attached to the inferences drawn from the results is satisfactory in terms of the objectives for the wilderness area. At this confidence level an optimum of 24 plots was considered to be practically possible, which retrieves an acceptable level of description, namely 77.8% (table 27).

If the maximum number of plots considered to be practically possible is not within the calculated range, lower confidence and asymptotic levels must be considered and the range of plots recalculated.

Step 6: Allocate plots on map

Having chosen the final sampling intensity, the required number of plots must be randomly allocated on the land facet maps of step 4. At a scale of 1:10 000 a 4mm square represents a 40 X 40 m plot on the ground. Therefore, overlay the land facet map with a 4 x 4 mm grid, aligned along the four cardinal compass directions, as shown in figures 21 and 22 for the baseline and follow-up surveys of the case study. Use random number tables to select the grid co-ordinates for locating the plots on the map. Having located the required number of plots, consecutively number each plot, starting with the plot closest to a point on the map that is convenient and locatable on the ground, continually moving to the nearest neighbouring plot.

Step 7: Burn block to be monitored

The exact time after a burn that baseline data is collected within each identified land facet must be recorded. Additionally the season of burn and the location (file reference) of the information recorded during the burn must be indicated.

Due to the obvious pyric succession of the grasslands, the timing of both baseline and follow-up surveys after a fire is crucial if noise within the data is to be kept to a minimum. Pyric succession is essentially a process of rapid vegetative recovery after fire, seldom involving great changes in plant populations (Kruger 1984).

Step 8: Locate plots in field

Plots are located in the field using the map . step 6. Start at the marked, locatable point on the map. From this point, using a compass, pace according to the map grid, the required direction and distance in multiples of 40m to a corner point of the first plot. From this point mark out the plot boundaries as set out on the map using nylon rope and a compass. Divide the plot into two with a centre line, to serve as a guide for the use of the wheel point apparatus.

If a plot falls within an atypical portion of the site it must be relocated, using the grid square map, to the nearest typical area.

Step 9: Collect data

Record within each 40 X 40 m plot the nearest rooted living plant to each of 200 points spaced 3m apart, using the wheel point apparatus. For each point record the species code on the field form (table 28).

Step 10: Capture data on computer for multivariate analysis

From the field form (table 28) transpose the data into the species code : density couplet format of table 29. This data is then captured on computer using Quattro (Borland, Inc. 1989) and further manipulated into the condensed matrix format using the supplied data management program COMPOSE (Mohler 1987). The data in the condensed matrix format must be sent to Flora Division of the Scientific Services Sub-Directorate for future analysis, if and when change is confirmed between baseline and follow-up surveys.

Step 11: Capture data on computer for the early warning device

This step constitutes the early warning device. The data recorded in table 29 is captured on computer using the data entry facility of and analysed by the supplied SORSIM program. This program is a macro written in Quattro Pro (Borland, Inc 1989) and compares each

plot with every other using the Sorenson quantitative index to yield a set of similarity measures as described under section 3.3 (page 68) of chapter 3.

Step 12: Execute the follow-up survey

This step marks the beginning of the follow-up survey. To determine the period between baseline and follow-up surveys the time-scale of anticipated change in terms of the management objectives and goals must be established. As fire, in the WWA, is the major impact assumed at this stage to induce change, change is anticipated to be between years. The frequency of fire in the long term can be described as regular, suggesting that follow-up surveys should be carried out on a regular basis. From a l[illegible]cal view point a minimum of two years between baseline and follow-up surveys is initially proposed. If with time it becomes apparent that change occurs over a longer time-scale the interval between surveys can be increased.

The field work for the follow-up survey is a repeat of steps 6-11 using the same sampling intensity determined for the early warning device in the baseline survey (step 5). In the follow-up survey the implications of step 7 must be carefully considered. The variability due to pyric succession must be reduced as far as possible. To achieve this it is crucial that, (1) for the follow-up survey the block be burnt at the same time and under similar weather conditions as recorded for the burn applied before the baseline survey (step 7) and (2) the follow-up survey must be completed within two weeks of the time that the baseline survey was executed after a burn.

Step 13: Compare baseline and follow-up surveys

For the early warning device the collected data must be analysed immediately according to the procedure of step 11. The follow-up set of similarity measures are then compared against the baseline set using the two sample Kolmogorov-Smirnov goodness of fit test in STATGRAPHICS (STSC, Inc. 1989). The null hypothesis (Ho) of there being no significant difference b[illegible]ween the two must be tested at the 90% confidence level as at this level optimum sensitivity and power of the test is achieved, as established in chapter 3.

If Ho is accepted, then the follow-up survey is completed. However, if Ho is refuted, indicating a change between baseline and follow-up surveys then further data is required to investigate the possible cause of change through the suggested ordination techniques. Additional plots must then be immediately sampled, until the required number of plots for the ordination technique as determined in step

5 have been completed. This data must then be transposed into the condensed matrix format as described in step 10 and sent to Flora Division for further analysis and interpretation.

In the example of the case study the comparison of the follow-up survey against the baseline survey indicated that no change had occurred as Ho was accepted (P>0.1) (table 30). Figure 23 graphically displays the frequency histogram of both the baseline and follow-up surveys.

However, to fully illustrate this step, further data was collected as if a change had in fact occurred. 14 Additional plots were randomly located and sampled, giving a total of 24 plots as determined in step 5. This data was transposed into the condensed matrix format, as described in step 10, for further analysis according to step 14.

Step 14: Analyse using multivariate techniques

This step is carried out by Flora Division of the Scientific Services Sub-Directorate, once change has been detected between the baseline and follow-up surveys. The data submitted from step 10 for both the baseline and follow-up surveys are analysed using multivariate techniques with a view to improving our understanding of the change that has taken place. The techniques applied are (1) TWINSPAN, (2) DECORANA and (3) SIMC .

The results of these techniques applied to the case study data are briefly discussed to demonstrate their ability for improving our understanding. In the case study it is obviously not possible to discuss the results in terms of change, as the early warning procedure confirmed that no change had in fact occurred. However, the case study site included two fire belts burnt bi-annually during June/July and a management block burnt on a 12 to 36 month fire cycle during winter or early spring plus a north aspect to the north of the vehicle track and a south aspect to the south of this track as shown in figures 21 and 22. The ordination results are discussed in terms of this variability.

TWINSPAN

TWINSPAN (Hill 1979b) is a Fortran program for arranging multivariate data in an ordered Two-way table by classification of the individuals and attributes. This provides a basis for comparison with the environmental and other factors effecting the composition of the vegetation.

The TWINSPAN results for the baseline and follow-up surveys are displayed in figures 24 and 25 respectively, which must be interpreted in terms of the actual location of the plots as displayed in figures 21 and 22.

For the baseline survey there is a distinction, at the primary dichotomy (D1), between plots within the firebelt 1 to the right and plots within the block to the left. The plots within fire belt 2 are separated between both sides of this dichotomy. However, of these plots those occurring on a north aspect are separated to the positive side from those on a south aspect to the negative side. This same distinction between plots within the fire belts and block is displayed by the follow-up data. The effect of aspect is more clearly demonstrated by this data set with all plots on a south aspect occurring on the negative side of dichotomy four (D4).

DECORANA

According to Greig-Smith (1983) the objective of ordinating sets of vegetation data is normally to generate hypotheses about the relationships between composition of vegetation and the environmental or other factors which determine it. In other words if there is a degree of order when the range of composition is plotted, there is evidence of correlation between an environmental factor and the overall composition of the vegetation.

The results of the DCA applied to the case study data are displayed in tables 31 and 32 and figures 26 and 27 for the baseline and follow-up surveys respectively.

The first ordination axis extracted from the baseline data clearly demonstrates a gradient with plots located in the block at the negative pole of the axis through to plots located within firebelt 1 at the positive pole of the axis. The eigen value for an axis is always a number between 0 and 1, and the higher the value the more important is the specific axis (Ter Braak 1988). In this case the low eigen value of 0.19 indicates that this axis has a relatively low importance making interpretation of the axis difficult, but due to the distinct grouping of plots along this axis it is predicted that the 1st axis represents fire frequency. The grouping of plots along the 2nd axis does not show any particular order and the low eigen value of 0.15 again indicates a low importance of this axis, making any meaningful interpretation difficult.

The first ordination axis of the follow-up survey clearly expresses the same gradient. Additionally the plots located on either a north or south aspect are separated along this axis. The extracted gradients

strongly support the results of the TWINSPAN classification. Indicator and preferential species for the division level by the classification are end points of the axes extracted by DCA. This is expected as both TWINSPAN and DECORANA are based on reciprocal averaging.

SIMCA

SIMCA (Greenacre 1986) is a program to perform simple correspondence analysis, a procedure that derives sets of multidimensional "scores" with a well defined and intentional geometric interpretation (Greenacre 1984).

The results of the correspondence analysis of the case study data are displayed in table 33. The two dimensional array of the plots for both the baseline and follow-up surveys are displayed in figure 28. Figure 29 is the same display of the plots except in terms of their locality within either the fire belts or block. Similarly figure 30 is a display of the plots in terms of their aspect. The geometry of the two dimensional display is fixed by the baseline data which was entered as the active data in the analysis. The follow-up data is superimposed on the baseline data by being treated as supplementary data in the analysis.

The 95% confidence radius (r) (table 33) for each point in the two dimensional plot was calculated using the following formula

$$r = \sqrt{5.99/k(fi)}$$

where k = total frequency of mention of all attributes
fi = mass of row (or column) i.

The plots contributing the major portion of the inertia to the principle axis are differentiated into those located within the firebelts at the negative pole and those within the block at the opposite pole. From this distinct order of plots, the principle axis is considered to represent fire frequency.

The second axis is largely described by plots located on either a north or south aspect, which are clearly differentiated (figure 30). As this axis accounts for 20.30% of the total variability, aspect is considered to have a strong influence on the composition of the plots.

From the results of these above three techniques, it is evident that the prescribed burning has a noticeable effect on the proportional species composition of the grass sward, which is further influenced

by aspect. There are an indefinite number of important factors influencing the vegetational composition of the grasslands, but it is obviously impossible to understand or identify them all. Through our improved understanding we are however able to identify those factors requiring further investigation and make predictions regarding causes of change. From the results of the case study the following predictions are made.

1) Beta diversity increases under a frequent fire cycle.
2) Season or timing of a fire has no effect on the grassland composition.
3) If the dominant plants are effected by stress or disturbance to a greater extent than scarcer individuals, then these latter plants have an opportunity to expand at the expense of the dominant individuals.

Due to the importance of understanding and identifying causes of change to enable the prescription of remedial management measures, a need exists to formulate these predictions into falsifiable hypotheses to be tested through a detailed impact study. Such an impact study is proposed in the following section.

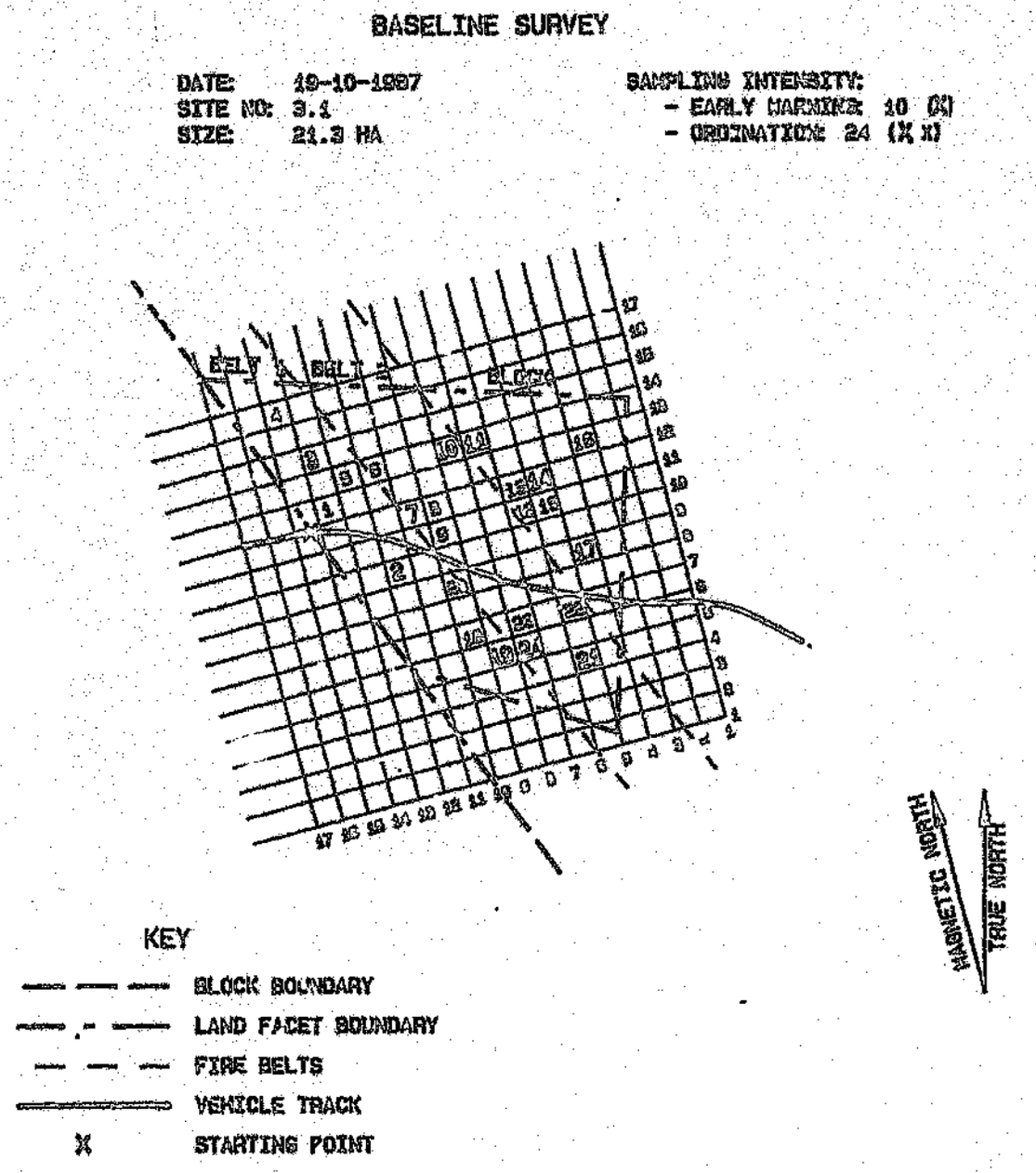

Figure 21. Land facet map indicating the location of plots for the baseline survey. Small numbers indicate the plots for the early warning procedure and the larger numbers the additional plots required for the ordination analyses.

FOLLOW-UP SURVEY

DATE: 14-10-1988
SITE NO: 3.1
SIZE: 21.3 HA

SAMPLING INTENSITY:
- EARLY WARNING: 10 00
- ORDINATION: 24 (X 2)

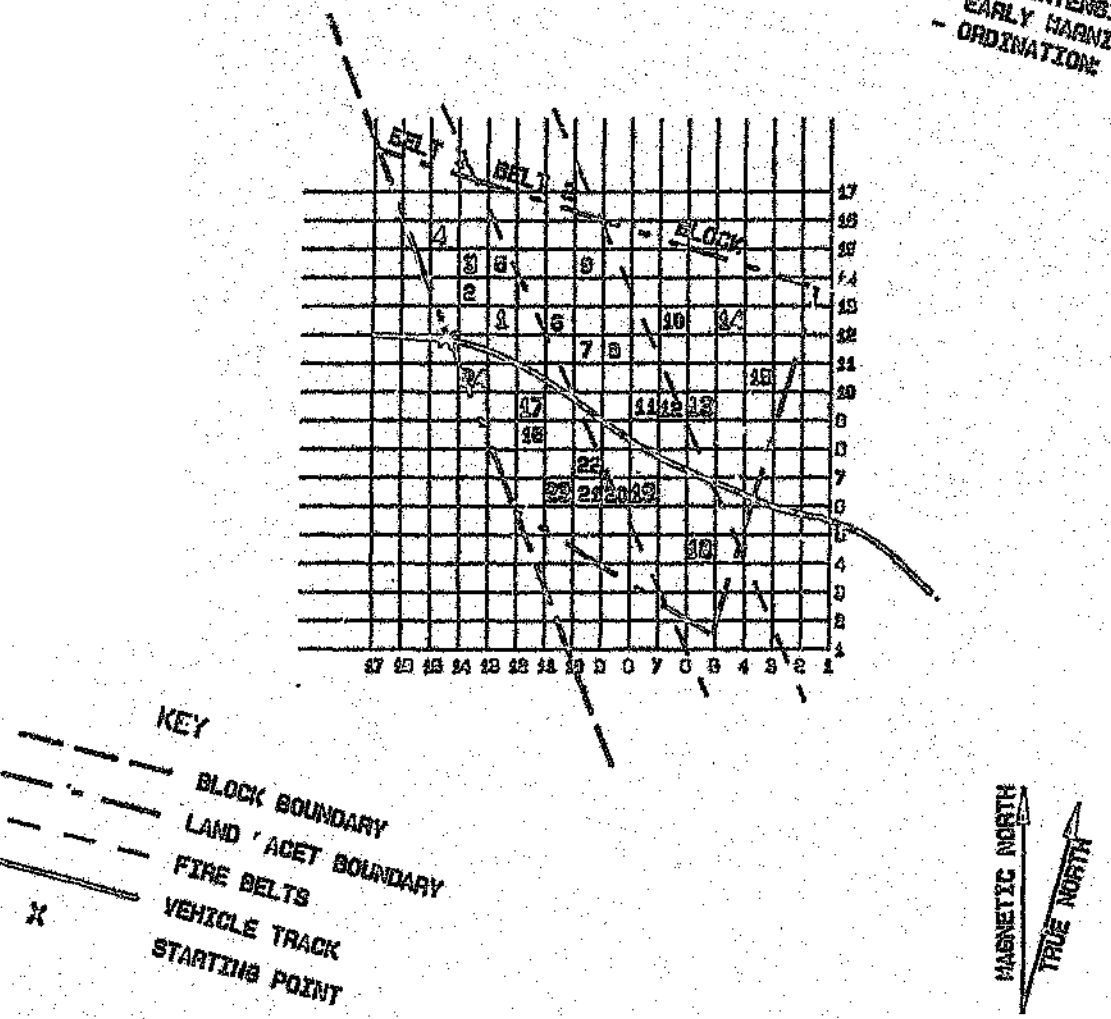

Figure 22. Land facet map indicating the location of plots for the follow-up survey. Small numbers indicate the plots for the early warning procedure and the larger numbers the additional plots required for the ordination analyses.

Table 28. Field form for recording the species code of the nearest rooted living plant to each of 200 points per plot.

HERBACEOUS LAYER SAMPLING FORM

RESERVE: OBSERVER: DATE:

PLOT NO.: BLOCK: SITE: VELD TYPE:

001			035			069			103			137			171		
002			036			070			104			138			172		
003			037			071			105			139			173		
004			038			072			106			140			174		
005			039			073			107			141			175		
006			040			074			108			142			176		
007			041			075			109			143			177		
008			042			076			110			144			178		
009			043			077			111			145			179		
010			044			078			112			146			180		
011			045			079			113			147			181		
012			046			080			114			148			182		
013			047			081			115			149			183		
014			048			082			116			150			184		
015			049			083			117			151			185		
016			050			084			118			152			186		
017			051			085			119			153			187		
018			052			086			120			154			188		
019			053			087			121			155			189		
020			054			088			122			156			190		
021			055			089			123			157			191		
022			056			090			124			158			192		
023			057			091			125			159			193		
024			058			092			126			160			194		
025			059			093			127			161			195		
026			060			094			128			162			196		
027			061			095			129			163			197		
028			062			096			130			164			198		
029			063			097			131			165			199		
030			064			098			132			166			200		
031			065			099			133			167					
032			066			100			134			168					
033			067			101			135			169					
034			068			102			136			170					

Table 29. Form for arranging the data from the field form into the species code : density couplet format required for the ordination techniques.

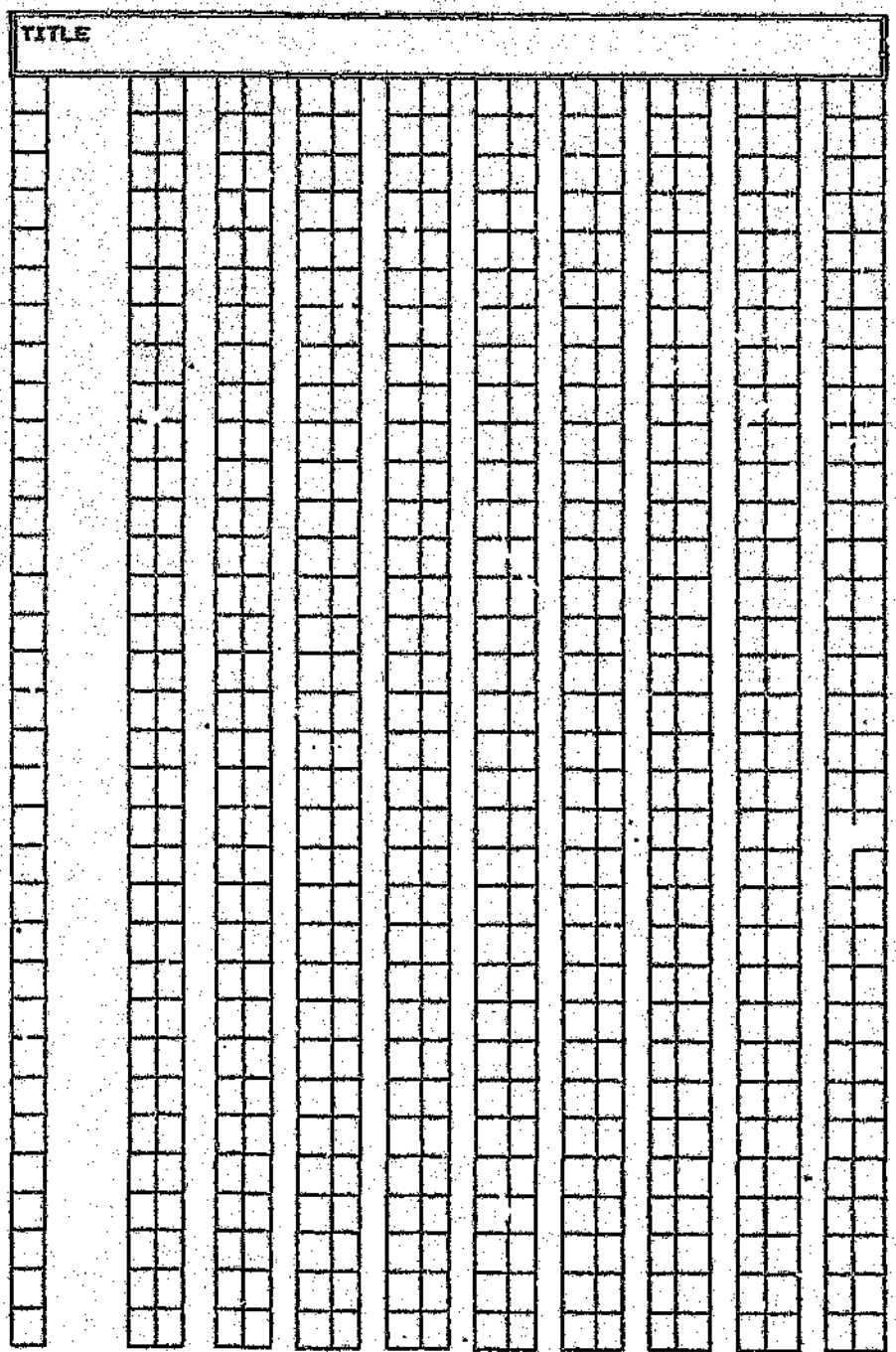

Table 30. Results of the test of the null hypothesis (Ho) of no significant difference between baseline and follow-up surveys, using the Kolmogorov-Smirnov goodness of fit test.

Two-Sample Analysis Results

		Sample 1	Sample 2	Pooled
Sample Statistics:	Number of Obs.	45	45	90
	Average	0.578222	0.563111	0.570667
	Variance	6.64677E-3	0.0135128	0.0100798
	Std. Deviation	0.0815277	0.116245	0.100398
	Median	0.57	0.59	0.58

Difference between Means = 0.015111

Conf. Interval For Diff. in Means:		90 Percent		
(Equal Vars.)	Sample 1 - Sample 2	-0.0200617	0.0503039	88 D.F.
(Unequal Vars.)	Sample 1 - Sample 2	-0.0201252	0.0503474	78.9 D.F.

Ratio of Variances = 0.491886

Conf. Interval for Ratio of Variances: 0 Percent

Sample 1 v Sample 2

Hypothesis Test for H0: Diff = 0 Computed t statistic = 0.71394

vs Alt: NE Sig. Level = 0.477154

at Alpha = 0.1 so do not reject H0.

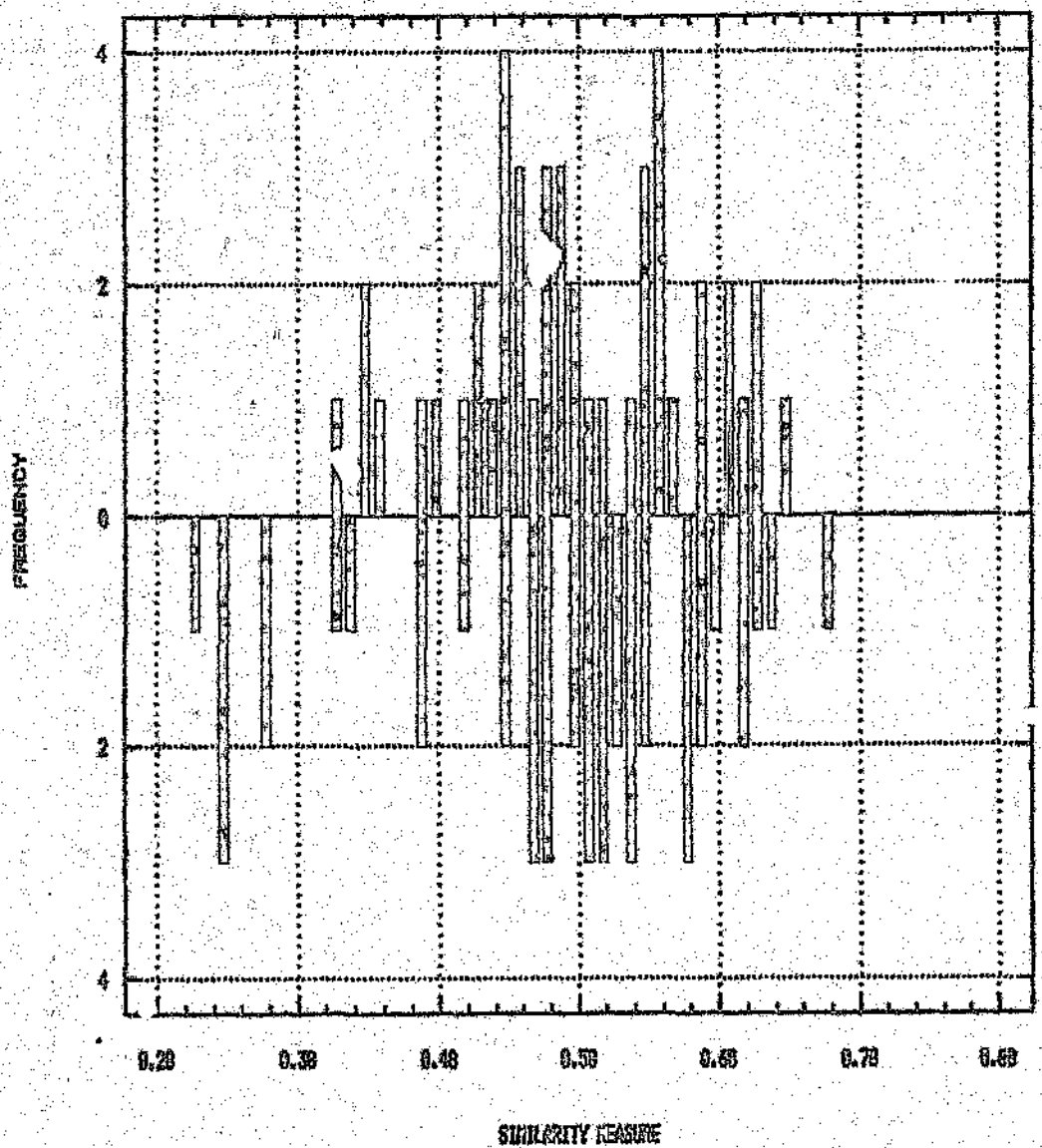

Figure 23. Frequency histogram of similarity coefficients for the baseline survey (top) and follow-up survey (bottom) compared in the test of the null hypothesis (Ho) of their being no significant difference between the two.

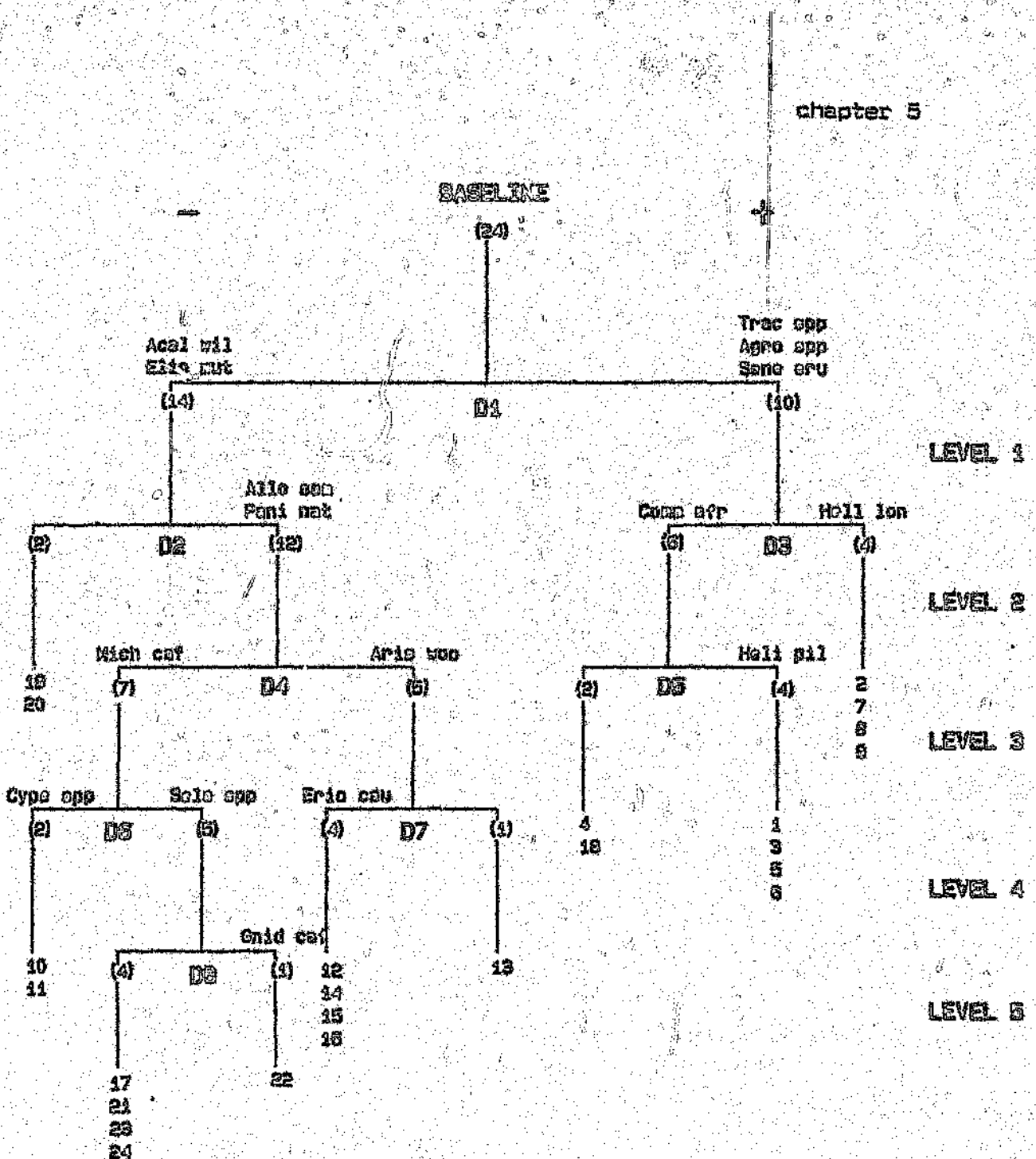

Note:

Species acronyms are indicator and preferential species for division level
Figures in brackets represent number of sample sites at division level.
Figures at the end of the level are sample plot numbers.

Figure 24. Dendrogram showing the hierarchial TWINSPAN classification of the baseline data.

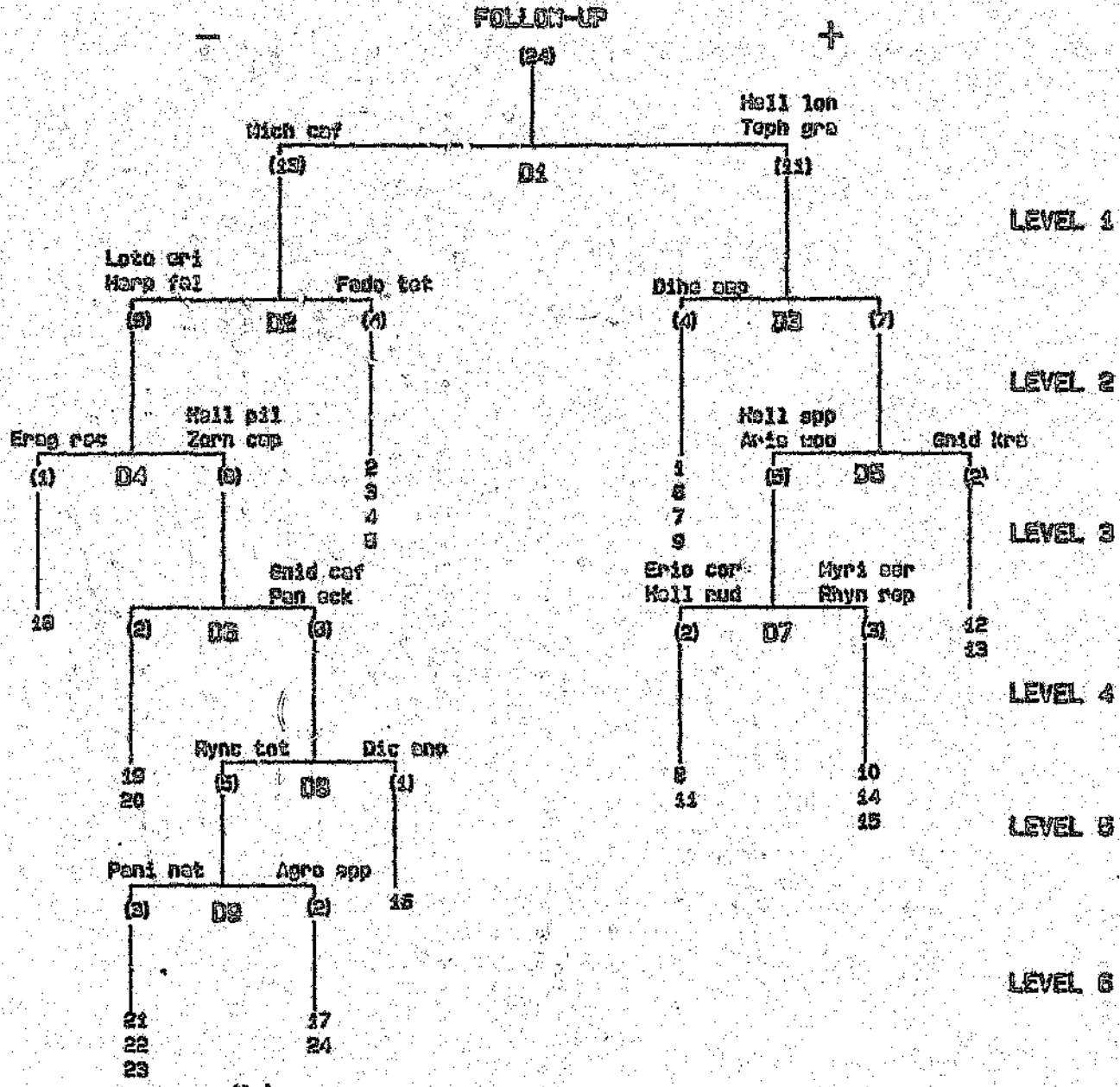

Note:

Species acronyms are indicator and preferential species for division 1a
Figures in brackets represent number of sample sites at division level.
Figures at the end of the level are sample plot numbers.

Figure 25. Dendrogram showing the hierarchial TWINSPAN classification of the follow-up data.

Table 31. Numerical output of detrended correspondence analysis for the baseline data.

NUMBER OF PLOTS 24 NUMBER OF SPECIES 68 NUMBER OF OCCURRENCES 851

SPECIES SCORES

ID	NAME	AX1	AX2	AX3	AX4	RANKED 1			RANKED 2			RANKED 3			RANKED 4		
							EIG=	.193		EIG=	.150		EIG=	.079		EIG=	.046
1	RHOD	ALT	-6	4	-8	1	61	BEDU	LEA	71	54	VERO	GAL	56	65	SERE	VER	74	66	HYPE	REV	125
2	TRAC	SPP	4	5	1	-3	62	CYPE	LAR	71	55	FRAG	TET	56	70	CHAM	SER	48	38	VERO	MAT	58
3	LOLI	SIB	6	5	0	6	64	SCIL	LAT	71	60	CHAM	PIL	30	68	SERE	SPP	40	83	LEDE	COO	45
4	TRIS	LEU	11	-5	3	-3	65	ERIO	CUR	71	61	HYPO	RIG	38	83	LEDE	COO	39	70	HYRI	SER	44
5	BULB	SPP	1	2	7	10	73	SENE	SPE	58	19	RUMC	KOH	35	49	RUMO	DEN	37	53	KOBA	ACH	43
6	ERIO	RAC	-5	2	-21	-16	76	LOBE	TRA	49	85	SENE	VER	33	69	SCAB	COL	36	78	ANTH	HER	42
7	THER	TRI	13	-10	-15	8	68	SERE	SPP	42	86	RHPE	REV	31	86	RUMC	TOT	34	79	HELI	MOO	39
8	AGRO	SPP	0	14	13	-7	45	ERAG	CAP	32	37	THES	SPP	25	76	ANTH	HER	32	60	HYAT	PIL	35
9	ELIO	MAT	-17	-7	6	-2	41	DIHE	AGP	55	56	BUCH	LON	24	62	HELL	LON	27	61	HYPO	RIG	35
10	HELI	PIL	7	-1	-12	-18	69	SCAB	COL	27	14	GNID	CAF	23	48	KELL	CHR	20	42	ZORO	CAP	30
11	ERIO	CAU	1	8	-12	11	20	HARP	FAL	26	42	ZORO	CAP	23	56	BUCH	LON	20	52	CLER	TRI	30
12	PENT	PRU	-8	-14	-3	2	79	HELI	MOO	25	18	SERE	VER	22	59	KOEL	CAP	20	51	SELA	SPP	25
13	RUMC	SPP	-1	18	5	-4	86	HYPE	REV	24	70	RHRI	SER	22	42	ZORN	CAP	19	66	RUMC	TOT	25
14	GNID	CAF	0	23	-22	9	18	SERE	VER	23	49	RUMO	DEN	21	67	CYPE	SPP	17	64	PENT	ANG	24
15	BUCH	CAF	8	-23	1	7	7	THER	TRI	13	50	VERO	MAT	21	85	HYPE	REV	17	18	SERE	VER	21
16	PANI	ECK	-7	6	-3	1	42	ZORN	CAP	13	68	SERE	SPP	13	28	ASTE	BAK	15	50	VERO	HIR	18
17	TRDI	SPP	-16	-3	-8	1	51	SELA	SPP	12	13	RUMC	SPP	18	53	KOBA	ACH	15	77	HERE	ANG	16
18	SERE	ERU	23	22	-20	21	4	TRIS	LEU	11	30	GNID	KRA	17	75	TETR	MAT	15	11	ERIO	CAU	11
19	RUMC	KOH	6	35	-59	-5	58	VERO	MAT	9	39	SCHO	SPA	17	0	AGRO	SPP	13	5	BULB	SPP	10
20	HARP	FAL	26	-4	9	-8	59	CHRY	PIL	9	29	STIC	AFR	16	51	SELA	SPP	13	40	KOEL	CRI	10
21	ALLO	SEN	-3	-16	0	3	61	HYPO	RIG	9	39	PEAR	OXO	16	76	SERE	LOO	10	14	GNID	CAF	9
22	GERB	KOA	0	-9	-5	2	15	RHCH	CAF	8	44	RHUS	SPP	16	20	HARP	FAL	9	75	TETR	MAT	9
23	TEPH	CRA	-12	-7	-1	-23	40	KOEL	CRI	8	64	PENT	ANG	16	47	HELL	SPP	8	7	THER	TRI	8
24	PROT	SIN	1	4	6	-28	62	HELL	LON	8	0	AGRO	SPP	14	58	VERO	MAT	8	59	KOEL	CAP	8
25	CLUT	KON	2	-2	-15	-30	65	SENE	VEN	8	53	KOBA	ACA	14	5	BULB	SPP	7	15	RHCH	CAF	7
26	CASS	BIE	-11	4	-10	3	10	HELI	PIL	7	34	DICO	ARO	11	9	ELIO	MAT	6	3	LOLI	SIB	6
27	CALL	LEP	1	-18	3	-4	39	SCHO	SPA	7	45	ERAG	CAP	9	24	PROT	SIN	6	32	PANI	MAT	6
28	ASTE	BAK	-10	6	15	-14	78	ANTH	HER	7	11	ERIO	CAU	8	83	BEDE	OBO	6	33	LOLM	AFR	5
29	STIC	AFR	-6	16	-48	-9	3	LOLI	SIB	6	86	RUMC	TOT	8	13	RUMC	SPP	5	41	DIHE	AGP	4
30	GNID	KRA	6	17	-35	-9	19	RUMC	KOH	6	16	PANI	ECK	6	45	ERAG	CAP	5	21	ALLO	SEN	3
31	TRDI	HIL	-5	-8	-3	-14	30	GNID	KRA	6	28	ASTE	BAK	6	79	KELL	ACO	5	26	CASS	BIE	3
32	PANI	MAT	-22	1	-2	6	35	ACAL	HIL	5	2	TRAC	SPP	5	43	ARIS	LOO	4	12	PENT	PRU	2
33	COLM	AFR	-13	-3	-10	5	59	KOEL	CAP	5	3	LOLI	SIB	5	60	CHRY	PIL	4	22	GERB	KOA	2
34	DICO	ARO	-6	11	2	-28	2	TRAC	SPP	4	62	HELL	LON	5	61	HYPO	RIG	4	1	RHOD	ALT	1
35	ACAL	HIL	5	-24	-2	-9	83	LEDE	COO	4	1	RHOD	ALT	4	64	PENT	ANG	4	16	PANI	ECK	1
36	RUMC	REP	-23	-2	-7	1	25	CLUT	KON	2	34	PROT	SIN	4	4	TRIS	LEU	3	17	TRDI	SPP	1
37	THES	SPP	2	25	-5	-29	37	THES	SPP	2	26	CASS	BIE	4	27	CALL	LEP	3	36	RUMC	REP	1
38	SCHO	SPA	7	17	-6	-29	53	KOBA	ACA	2	5	BULB	SPP	2	34	DICO	ARO	2	78	SERE	LOO	1
39	PEAR	OXO	-4	16	-18	-17	84	PENT	ANG	2	6	LONG	RAC	2	2	TRAC	SPP	1	48	[illegible]	CHR	0
40	KOEL	CRI	8	-11	-9	10	67	CYPE	SPP	2	46	PANI	BUR	2	15	RHCH	CAF	1	8	[illegible]	KUT	-2
41	DIHE	AGP	35	-7	-5	4	5	BULB	SPP	1	32	PANI	MAT	1	3	LOLO	SIB	0	2	TRAC	SPP	-3

Table 31 continued.

42	ZOEO	CAP	13	23	19	30	11	ERIO	CAU	1	43	ARIS	COD	1	21	ALLO	SEO	0	4	TRIS	LEU	-3									
43	ARIS	COD	-16	1	4	-14	24	PROT	SOR	1	69	SCAB	COL	1	23	TEPH	CHA	-1	13	RYBC	SPP	-4									
44	RHUS	SPP	-4	16	-10	-17	27	CALL	LEP	1	10	KELI	PIL	-1	57	PTER	SPP	-1	27	CALL	LEP	-4									
45	ERAG	CAP	36	9	5	-50	49	CROO	CER	1	81	DECU	LEA	-1	32	PANI	ANT	-2	19	RYBC	KOO	-5									
46	PANL	BUR	-12	2	-13	-6	8	AGRO	SPP	0	82	CYPE	LAR	-1	35	ACAL	UIL	-2	46	PANL	BUR	-6									
47	KELL	SPP	-1	-10	8	-11	14	ENTO	CAF	0	84	SCIL	ONT	-1	52	CLER	TRI	-2	8	AGRO	SPP	-7									
48	KELL	CHR	-2	-16	28	0	22	CERB	HOM	0	85	ERAG	CUR	-1	12	PENT	PRO	-3	49	KOMO	CER	-7									
49	KOMO	CER	1	21	37	-7	13	RYBC	SPP	-1	25	CLUT	KOO	-2	16	PANI	ECH	-3	20	HARP	FAL	-8									
50	VERO	HOR	-19	-17	-24	10	47	KELL	SPP	-1	38	RYBC	REP	-2	31	DODI	HIL	-3	29	STOO	AFR	-9									
51	SELA	SPP	12	-36	13	25	80	LOTO	ERI	-1	17	DEOF	TAP	-3	60	LOTO	ERI	-3	30	ENTO	KRA	-9									
52	CLER	TRI	-16	-7	-2	39	48	KELL	CHR	-2	33	COOO	HOR	-3	22	CERB	HOM	-5	35	ACAL	UIL	-9									
53	KOMO	ACA	2	14	15	43	54	VERO	GAL	-2	28	PROP	PRA	-4	37	THES	SPP	-5	92	TEPH	ELO	-10									
54	VERO	GAL	-2	56	-57	-49	55	FADO	TET	-2	4	TRIS	LEU	-5	41	DUKE	REP	-5	47	KELL	SPP	-11									
55	FADO	TET	-2	56	-57	-49	21	ALLO	SEO	-3	9	ELIO	FIL	-7	38	SCHO	SPA	-6	60	SCAB	COL	-11									
56	BUCH	LOO	-10	24	20	-36	29	STOO	AFR	-4	23	TEPH	CHA	-7	77	HEBE	ANG	-6	57	PTER	SPP	-12									
57	PTER	SPP	-9	-20	-1	-12	39	PEAR	OBO	-4	41	DUKE	ACP	-7	36	RYBC	REP	-7	63	BEDE	OBO	-12									
58	VERN	ONT	9	21	8	58	44	RHUS	SPP	-4	52	CLER	TRI	-7	71	PELA	LUR	-7	28	ASTE	BRK	-14									
59	KOEL	CAP	5	-16	28	8	66	RYBC	TOT	-4	73	SERE	SPE	-8	1	REHO	ALT	-8	31	LEOI	HIL	-14									
60	CHRI	PIL	9	39	4	35	6	ERAG	RAC	-5	22	CERO	HOM	-9	17	DODI	SPP	-8	63	ARIS	COO	-14									
61	HYPO	RIG	9	39	4	35	31	IRDI	HIL	-5	31	LYOL	HIL	-9	40	KOEL	CRI	-9	6	ERAG	RAC	-16									
62	KELL	LEO	8	5	27	-25	63	BEDE	OBO	-5	7	TRIR	TRI	-10	26	CASS	BIE	-10	10	KELI	PIL	-16									
63	BEDE	OBO	-5	-10	6	-12	1	REHO	ALT	-6	47	KELL	CAP	-10	33	COKO	AFR	-19	39	PEAR	OBO	-17									
64	PENT	ACO	2	16	4	24	34	DICO	ACO	-6	53	BEDE	COO	-10	74	KOKO	TRA	-11	44	RHUS	SPP	-17									
65	SERE	VEN	8	33	74	-37	71	PELA	LUR	-6	40	KOEL	CRU	-11	10	KELI	PIL	-12	34	DICO	ACO	-20									
66	RYBC	TOT	-4	6	34	25	16	PANI	ECH	-7	67	CYPE	SPP	-12	11	ERIO	CAU	-12	23	TEPH	CHA	-23									
67	CYPE	SPP	2	-12	17	-23	72	TEPH	ELO	-7	12	PENT	PRO	-14	46	PANL	BUR	-13	87	CYPE	SPP	-23									
68	SERE	SPP	42	10	40	-33	12	PENI	PRO	-8	74	KOKO	TRA	-14	73	SERE	SPE	-14	74	KOKO	TRA	-24									
69	SCAB	COL	27	1	35	-11	57	PTER	SPP	-9	77	HEBE	ANG	-14	7	THEH	TRI	-15	62	KELL	LOO	-25									
70	CHRI	SER	-49	22	48	44	28	ASTE	BRK	-10	21	ALLO	SEO	-16	25	CLUT	HOO	-15	24	PROT	SOO	-26									
71	PELA	LUR	-6	-37	-7	-58	55	BUCH	LOO	-10	68	KELL	CHR	-16	81	DECU	LEA	-15	37	THES	SPP	-29									
72	TEPH	ELO	-7	-41	-20	-10	26	CASS	BIE	-11	59	KOEL	CAP	-16	82	CYPE	LAR	-15	38	SCHO	SPA	-29									
73	SERE	SPE	55	-9	-14	-49	23	TEPH	CHA	-12	49	KELI	PUO	-16	84	SCIL	ANT	-15	25	CLUT	FIJ	-30									
74	KOKO	TRA	49	-14	-11	-24	46	PANL	BUR	-12	50	VERO	HOR	-17	85	ERAG	CUR	-15	68	SERE	SPP	-33									
75	TETR	ANT	-41	-20	15	9	33	COKO	AFR	-13	27	CALL	LEP	-18	39	PEAR	OBO	-18	56	BUCH	LOO	-36									
76	SERE	LOH	-50	-18	18	1	77	HEBE	ANG	-13	76	SERE	LOH	-18	44	RHUS	SPP	-18	65	SERE	VEN	-37									
77	HEBE	ANG	-13	-14	-6	16	17	IRDI	SPP	-16	80	LOTO	ERI	-19	18	SERE	ERU	-20	54	VERO	GAL	-49									
78	ANTH	HER	7	-32	32	42	52	CLER	TRI	-16	57	PTER	SPP	-20	72	TEPH	ELO	-20	55	FADO	TET	-49									
79	KELI	COO	25	-16	5	39	9	ELIO	FIJ	-17	75	TETR	ANT	-20	6	ERAG	RAC	-21	73	SERE	SPE	-49									
80	LOTO	ERI	-1	-19	-3	-61	43	ARIS	COO	-18	15	BUCH	CAF	-23	14	ENTO	CAF	-22	45	ERAG	CAP	-58									
81	DECU	LEA	71	-1	-15	-53	50	VERN	HOR	-19	35	ACAL	UIL	-24	50	VERN	HOR	-24	81	DECU	LEA	-53									
82	CYPE	LAR	71	-1	-15	-53	32	PANI	ANT	-22	83	LEDE	COO	-31	30	ENTO	KRA	-35	82	CYPE	LAR	-53									
83	LEDE	COO	6	-31	39	45	36	RYBC	REP	-23	78	ANTH	HER	-32	29	STOO	AFR	-48	84	SCIL	ANT	-53									
84	SCIL	ANT	71	-1	-15	-53	75	TETR	ANT	-22	51	SELA	SPP	-36	54	VERO	GAL	-57	85	ERAG	CUR	-53									
85	ERAG	CUR	71	-1	-15	-53	70	HYPI	SER	-49	71	PELA	LUR	-37	55	FADO	TET	-57	71	PELA	LUR	-59									
86	HYPE	REV	24	31	17	[illegible]	76	SERE	LOH	-59	72	TEPH	ELO	-41	19	RYBC	HOH	-59	80	LOTO	ERI	-61									

Table 31 continued.

SAMPLE SCORES

N	NAME	AX1	AX2	AX3	AX4	RANKED 1 EIG= .193			RANKED 2 EIG= .150			RANKED 3 EIG= .079			RANKED 4 EIG= .046	
1	SHCP01	11	16	-54	-6	20	SHCP20	138	5	SHCP05	84	7	SHCP07	75	16	SHCP16	58
2	SHCP02	41	-2	32	-3	19	SHCP19	60	7	SHCP07	60	16	SHCP16	38	19	SHCP19	27
3	SHCP03	32	28	-57	19	18	SHCP18	46	6	SHCP06	59	2	SHCP02	32	15	SHCP15	26
4	SHCP04	-8	26	-14	-8	2	SHCP02	41	18	SHCP18	46	21	SHCP21	31	21	SHCP21	21
5	SHCP05	-4	84	-45	-23	3	SHCP03	32	16	SHCP16	33	8	SHCP08	25	16	SHCP16	20
6	SHCP07	17	59	3	16	23	SHCP23	26	8	SHCP08	29	9	SHCP09	22	3	SHCP03	19
7	SHCP08	24	60	75	-6	24	SHCP24	25	3	SHCP03	28	10	SHCP10	13	8	SHCP08	16
8	SHCP09	-1	29	25	-7	7	SHCP07	24	4	SHCP04	24	24	SHCP24	12	23	SHCP23	8
9	SHCP10	4	23	22	-30	6	SHCP06	17	9	SHCP09	23	13	SHCP13	8	24	SHCP24	8
10	SHCP12	-12	-56	-7	-27	1	SHCP01	11	1	SHCP01	14	23	SHCP23	6	22	SHCP22	6
11	SHCP13	-6	-76	-17	-2	21	SHCP21	7	14	SHCP14	12	6	SHCP06	3	13	SHCP13	1
12	SHCP14	-62	-6	-6	-10	9	SHCP09	4	15	SHCP15	4	22	SHCP22	3	11	SHCP11	-2
13	SHCP15	-55	-20	8	1	8	SHCP08	-1	2	SHCP02	-2	17	SHCP17	-2	2	SHCP02	-3
14	SHCP16	-69	12	-10	-3	17	SHCP17	-2	20	SHCP20	-2	10	SHCP10	-6	14	SHCP14	-3
15	SHCP17	-66	4	-31	26	5	SHCP05	-4	12	SHCP12	-6	12	SHCP12	-6	1	SHCP01	-6
16	SHCP19	-84	33	35	20	11	SHCP11	-6	22	SHCP22	-10	19	SHCP19	-7	7	SHCP07	-6
17	SHCP35	-2	-29	-2	-28	4	SHCP04	-9	13	SHCP13	-28	14	SHCP14	-10	4	SHCP04	-8
18	SHCP41	46	46	13	58	22	SHCP22	-10	17	SHCP17	-28	20	SHCP20	-12	12	SHCP12	-10
19	SHCP48	60	-37	-7	27	10	SHCP10	-12	19	SHCP19	-37	4	SHCP04	-14	5	SHCP05	-23
20	SHCP49	138	-2	-12	-24	12	SHCP12	-52	24	SHCP24	-42	11	SHCP11	-17	20	SHCP20	-24
21	SHCP57	7	-47	31	21	15	SHCP15	-65	21	SHCP21	-47	15	SHCP15	-31	10	SHCP10	-27
22	SHCP59	-10	-10	3	6	14	SHCP14	-69	10	SHCP10	-56	5	SHCP05	-45	17	SHCP17	-28
23	SHCP60	25	-79	8	8	16	SHCP16	-94	11	SHCP11	-74	1	SHCP01	-54	9	SHCP09	-35
24	SHCP61	28	-42	12	0	13	SHCP13	-96	23	SHCP23	-79	3	SHCP03	-57	8	SHCP08	-39

Table 32. Numerical output of detrended correspondence analysis for the follow-up data.

NUMBER OF PLOTS 24 NUMBER OF SPECIES 79 NUMBER OF OCCURRENCES 833

SPECIES SCORES

N	NAME	AX1	AX2	AX3	AX4	RANKED 1 EIG= .222			RANKED 2 EIG= .166			RANKED 3 EIG= .084			RANKED 4 EIG= .042		
1	RENO	ALT	3	-5	-5	-3	63	MYRI	SER	80	46	BUCH	LON	86	75	KNOX	TRA	98	42	SENE	LEN	132
2	TRAC	SPP	-4	3	-7	1	62	PROT	SID	38	47	CYPE	SPP	58	73	PENT	ANG	59	30	ARGY	SPP	107
3	LOUD	SID	-8	-3	3	-6	58	RHYN	REP	35	19	RHYN	GLA	53	72	TETR	NAT	45	78	HYPO	ROD	49
4	TRIS	LEU	-5	-13	3	-2	67	TEPH	ELO	32	4	SENE	LON	53	74	LOTO	ERI	41	73	PENT	ANG	47
5	BULB	SPP	-3	-1	4	-5	29	ARIS	WOO	27	41	SENE	SPP	41	66	SENE	VEN	40	56	ERIO	LON	45
6	ERAG	RAC	4	11	-21	19	46	PANI	NAT	26	30	ARGY	SPP	35	42	SENE	LON	39	36	GNID	KRA	43
7	THEN	TRI	-12	-23	-6	-12	73	PENT	ANG	24	45	PEAR	OBO	30	36	GNID	KRA	33	39	KOBO	CER	33
8	AGRO	SPP	2	23	3	27	72	TETR	NAT	23	14	GNID	CAF	28	23	TEPH	GRA	30	40	PHYL	BUR	29
9	ELIO	NUT	14	-8	-6	4	75	KNOX	TRA	20	16	SENE	ERU	28	30	ARGY	SPP	30	8	AGRO	SPP	27
10	HELI	PIL	-14	-6	6	-13	37	HELL	LON	19	50	RYNC	TOT	28	65	CYPE	SP1	27	25	CLUT	KON	27
11	ERIO	COR	-3	1	-4	11	24	DICO	AND	17	8	AGRO	SPP	23	45	PEAR	OBO	22	22	GERB	KRA	24
12	PENT	PRU	10	-5	-3	13	23	TEPH	GRA	16	25	CLUT	KON	22	48	BUCH	LON	20	45	PEAR	OBO	24
13	RHYN	SPP	-2	12	9	-5	56	ERIO	LON	15	57	VERN	NAT	19	35	ERAG	CAP	18	6	ERAG	RAC	19
14	GNID	CAF	-9	28	4	-7	9	ELIO	NUT	14	51	STOK	AFR	18	58	RHYN	REP	16	24	DICO	AND	19
15	DICH	CAF	-17	-9	-8	4	33	COMM	AFR	14	39	KOBO	CER	15	24	DICO	AND	17	59	SELA	SPP	19
16	PANI	ACK	5	-5	-12	0	76	HELL	CHR	14	54	KOBO	ANT	14	26	CASS	BIE	17	75	KNOX	TRA	19
17	INDI	SPP	8	0	-62	-4	69	ACAL	SCH	13	43	THES	SPP	13	60	INDI	HIL	17	31	BEL.	OBO	18
18	SENE	ERU	-12	28	-15	5	71	LEDO	CEO	13	13	RHYN	SPP	12	25	CLUT	KON	15	54	KOBO	ANT	18
19	RHYN	GLA	-4	53	-15	-21	35	ERAG	CAP	12	34	DIHE	AMP	12	39	ROND	CER	14	38	HELL	NUD	17
20	HARP	FAL	-16	-10	2	12	55	ASTE	BAK	12	8	ERAG	RAC	11	79	PSAM	MYR	14	72	TETR	NAT	17
21	ALLO	SEN	-6	-3	-30	4	64	SCAB	COL	11	32	CLER	TRY	11	34	DIHE	AMP	11	41	SENE	SPP	16
22	GERB	KRA	6	2	-20	24	12	PENT	PRU	10	33	COMM	AFR	9	43	THES	SPP	11	62	PROT	SID	15
23	TEPH	GRA	16	-11	30	-10	32	CLER	TRY	9	63	MYRI	SER	9	44	ZORN	CAP	10	69	ACAL	SCH	14
24	DICO	AND	17	-8	17	19	17	INDI	SPP	8	36	GNID	KRA	7	46	PANI	NAT	10	71	LEDO	COO	14
25	CLUT	KON	7	22	15	27	36	GNID	KRA	8	66	SENE	VEN	7	13	RHYN	SPP	9	12	PENT	PRU	13
26	CASS	BIE	0	0	17	7	52	FADO	TET	8	29	ARIS	WOO	5	41	SENE	SPP	9	60	INDI	HIL	13
27	CALL	LEP	2	-5	-19	-1	25	CLUT	KON	7	52	FADO	TET	4	10	HELI	PIL	6	20	HARP	FAL	12
28	ACAL	UIL	5	-2	-7	1	60	INDI	HIL	7	2	TRAC	SPP	3	38	HELL	NUD	5	11	ERIO	COR	11
29	ARIS	WOO	27	5	-6	-13	65	CYPE	SP1	7	44	ZORN	CAP	3	5	BULB	SPP	4	49	KOEL	CAF	11
30	ARGY	SPP	-7	35	30	107	22	GERB	KRA	6	22	GERB	KRA	2	14	GNID	CAF	4	47	CYPE	SPP	10
31	BECI	OBO	-2	-3	-11	18	16	PANI	ACK	5	35	ERAG	CAP	2	3	LOUD	SID	3	51	STOK	AFR	9
32	CLER	TRY	9	11	-25	-7	28	ACAL	UIL	5	65	CYPE	SP1	2	4	TRIS	LEU	3	55	ASTE	BAK	9
33	COMM	AFR	14	9	2	-8	6	ERAG	RAC	4	11	ERIO	COR	1	8	AGRO	SPP	3	37	HELL	LON	8
34	DIHE	AMP	-6	12	11	-1	50	RYNC	TOT	4	17	INDI	SPP	0	20	HARP	FAL	2	28	CASS	BIE	7
35	ERAG	CAP	12	2	18	6	57	VERN	NAT	4	26	CASS	BIE	0	33	COMM	AFR	2	35	ERAG	CAP	6
36	GNID	KRA	8	7	33	43	66	SENE	VEN	4	5	BULB	SPP	-1	49	KOEL	CAP	-1	69	ANTH	KER	6
37	HELL	LON	19	-11	-6	8	1	REND	ALT	3	28	ACAL	UIL	-2	2	TRAC	SPP	-2	76	HEBE	ANG	6
38	HELL	NUD	-9	-6	5	17	43	THES	SPP	3	53	PTER	SPP	-2	50	RYNC	TOT	-2	77	VERN	HIR	6
39	ROND	CER	0	15	14	33	8	AGRO	SPP	2	56	RHYN	REP	-2	76	HYPO	ROD	-2	18	SENE	ERU	5
40	PHYL	BUR	-2	-3	-13	29	27	CALL	LEP	2	3	LOUD	SID	-3	12	PENT	PRU	-3	53	PTER	SPP	
41	SENE	SPP	-1	41	9	16	45	PEAR	OBO	2	21	ALLO	SEN	-3	11	ERIO	COR	-4	9	ELIO	NUT	4

Table 32 continued.

| | | |

Table 32 continued.

SAMPLE SCORES

N	NAME	AX1	AX2	AX3	AX4	RANKED 1 EIG= .222		RANKED 2 EIG= .106		RANKED 3 EIG= .064		RANKED 4 EIG= .042	
1	SAMPLE1	1	56	24	55	14	SAMPLE14 171	2	SAMPLE02 91	13	SAMPLE13 63	1	SAMPLE01 55
2	SAMPLE3	-10	91	13	-25	15	SAMPLE15 90	1	SAMPLE01 56	7	SAMPLE07 30	12	SAMPLE12 32
3	SAMPLE4	-15	50	-37	-10	10	SAMPLE10 70	3	SAMPLE03 50	15	SAMPLE15 26	17	SAMPLE17 24
4	SAMPLE5	-16	3	-45	1	12	SAMPLE12 63	5	SAMPLE05 46	1	SAMPLE01 24	24	SAMPLE24 21
5	SAMPLE6	-15	46	-28	19	13	SAMPLE13 45	6	SAMPLE06 43	6	SAMPLE06 16	5	SAMPLE05 19
6	SAMPLE9	3	43	16	-20	11	SAMPLE11 30	14	SAMPLE14 26	20	SAMPLE20 14	14	SAMPLE14 12
7	SAMPLE10	11	-11	30	1	8	SAMPLE08 22	16	SAMPLE16 7	22	SAMPLE22 14	13	SAMPLE13 8
8	SAMPLE11	22	-29	-33	-2	7	SAMPLE07 11	4	SAMPLE04 3	2	SAMPLE02 13	16	SAMPLE16 7
9	SAMPLE14	2	-3	-26	-5	6	SAMPLE06 3	17	SAMPLE17 -2	12	SAMPLE12 13	11	SAMPLE11 6
10	SAMPLE15	70	-29	-40	-11	9	SAMPLE09 2	9	SAMPLE09 -3	23	SAMPLE23 13	4	SAMPLE04 2
11	SAMPLE17	30	-33	-9	6	1	SAMPLE01 1	23	SAMPLE23 -4	21	SAMPLE21 12	18	SAMPLE18 2
12	SAMPLE18	63	-42	13	32	2	SAMPLE02 -10	15	SAMPLE15 -7	17	SAMPLE17 9	7	SAMPLE07 1
13	SAMPLE19	45	-26	63	8	3	SAMPLE03 -15	7	SAMPLE07 -11	19	SAMPLE19 9	8	SAMPLE08 -2
14	SAMPLE21	171	26	-8	12	5	SAMPLE05 -16	21	SAMPLE21 -11	16	SAMPLE16 0	9	SAMPLE09 -5
15	SAMPLE22	90	-7	26	-50	4	SAMPLE04 -16	19	SAMPLE19 -15	24	SAMPLE24 -1	19	SAMPLE19 -7
16	SAMPLE30	-60	7	0	7	19	SAMPLE19 -37	24	SAMPLE24 -15	14	SAMPLE14 -8	3	SAMPLE03 -10
17	SAMPLE31	-47	-2	9	24	24	SAMPLE24 -45	22	SAMPLE22 -16	11	SAMPLE11 -9	20	SAMPLE20 -10
18	SAMPLE53	-47	-52	-22	2	21	SAMPLE21 -46	12	SAMPLE12 -25	18	SAMPLE18 -22	10	SAMPLE10 -11
19	SAMPLE55	-37	-15	9	-7	17	SAMPLE17 -47	20	SAMPLE20 -27	9	SAMPLE09 -26	22	SAMPLE22 -13
20	SAMPLE57	-47	-27	14	-10	18	SAMPLE18 -47	8	SAMPLE08 -29	5	SAMPLE05 -28	23	SAMPLE23 -16
21	SAMPLE58	-46	-11	12	-21	20	SAMPLE20 -47	10	SAMPLE10 -29	8	SAMPLE08 -33	6	SAMPLE06 -20
22	SAMPLE59	-50	-16	14	-13	22	SAMPLE22 -50	11	SAMPLE11 -33	3	SAMPLE03 -37	21	SAMPLE21 -21
23	SAMPLE60	-51	-4	13	-16	23	SAMPLE23 -51	12	SAMPLE12 -42	4	SAMPLE04 -45	2	SAMPLE02 -25
24	SAMPLE61	-45	-15	-7	21	16	SAMPLE16 -60	18	SAMPLE18 -52	10	SAMPLE10 -48	15	SAMPLE15 -50

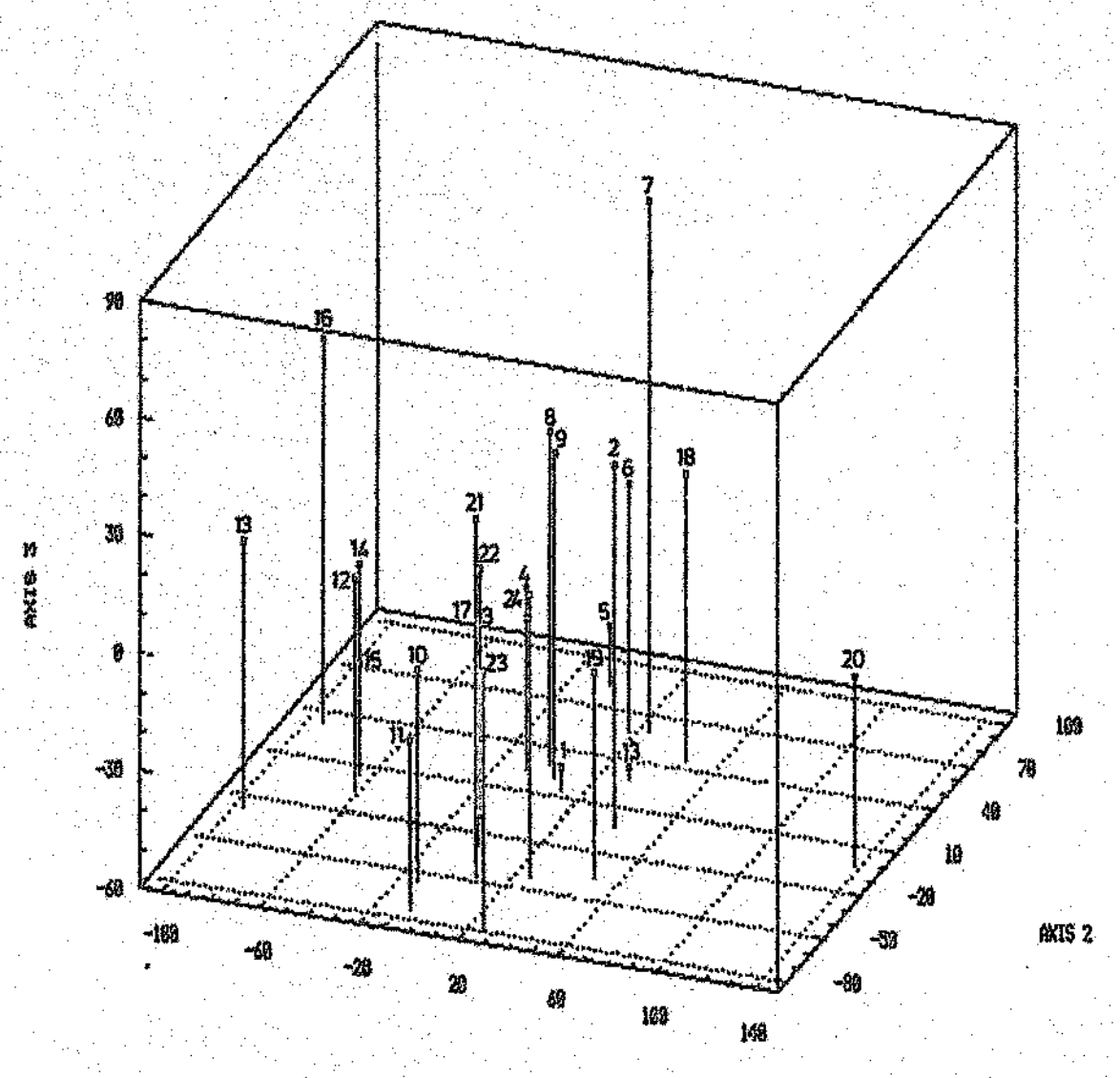

Figure 28. Plot of the first three detrended correspondence analysis axes in ecological space for the baseline survey, where points are the location of plots.

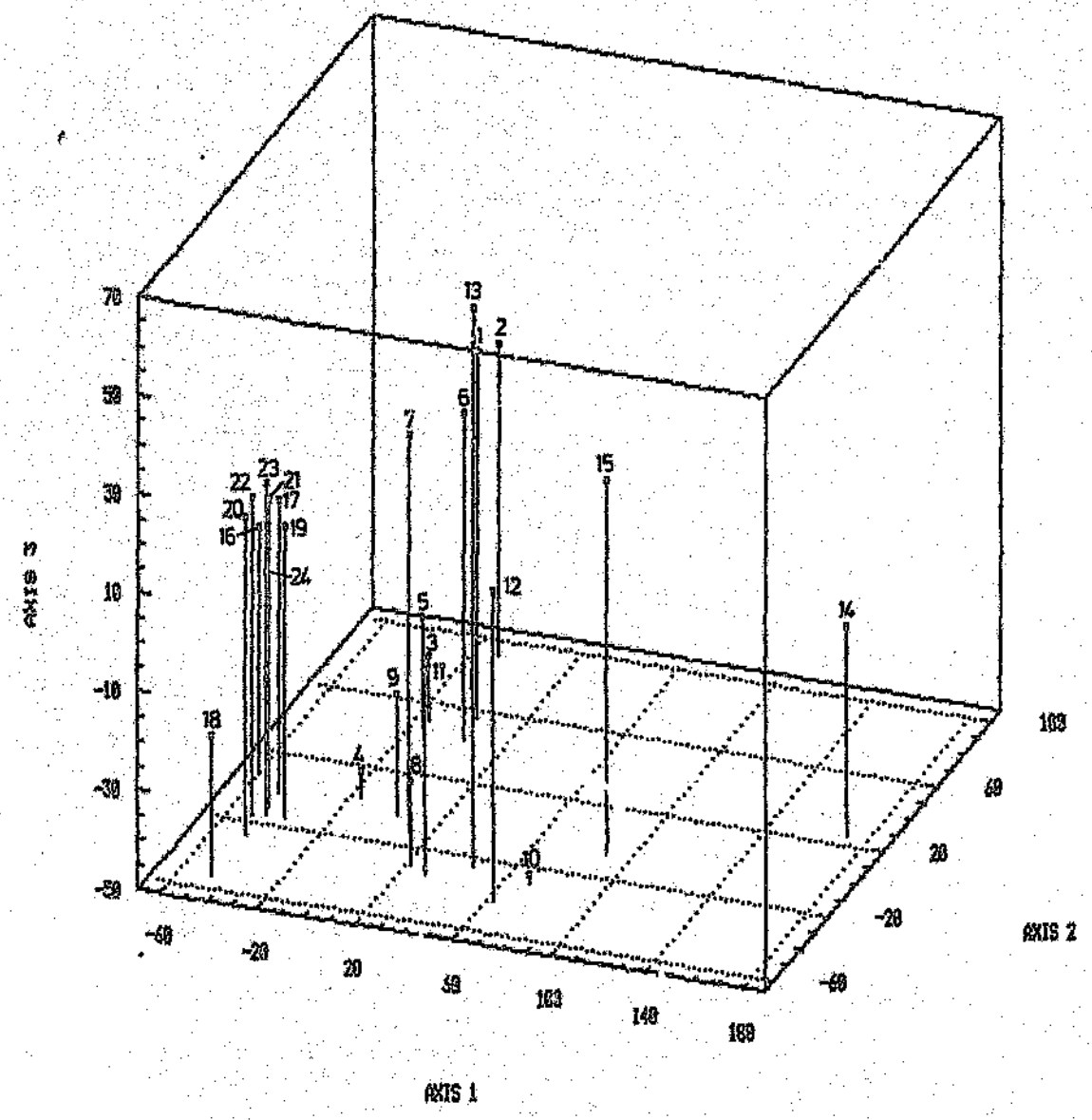

Figure 27. Plot of the first three detrended correspondence analysis axes in ecological space for the follow-up survey, where points are the location of plots.

Table 33. Numerical output of simple correspondence analysis (SIMCA) for the baseline data with the follow-up data included as supplementary points.

INERTIAS AND PERCENTAGES OF INERTIA

1	0.168225	24.71%	**********
2	0.138155	20.30%	*********
3	0.067146	9.86%	****
4	0.045192	6.64%	***
5	0.042023	6.17%	***
6	0.032222	4.73%	**
7	0.030141	4.43%	**
8	0.024623	3.62%	**
9	0.022163	3.26%	**
10	0.020495	3.01%	**
11	0.017546	2.58%	*
12	0.016135	2.37%	*
13	0.014043	2.06%	*
14	0.009177	1.35%	*
15	0.007760	1.14%	*
16	0.007342	1.08%	*
17	0.005810	0.85%	*
18	0.005076	0.75%	*
19	0.003226	0.47%	*
20	0.002563	0.38%	*
21	0.001613	0.24%	
	0.680675		

ROW CONTRIBUTIONS : Species

Species occurring in less than four plots were excluded

I	NAME	QLT	MAS	INR	k=1	COR	CTR	k=2	COR	CTR
1	1	200	88	25	67	24	2	183	176	21
2	2	594	115	30	-323	593	71	14	1	0
3	3	529	131	25	-263	525	54	24	4	1
4	4	356	43	27	-132	40	4	-372	317	43
5	5	45	104	34	-100	45	6	-3	0	0
6	6	102	21	21	118	21	2	232	81	8
7	7	381	36	42	-141	25	4	-531	356	74
8	8	294	21	21	-314	146	13	316	148	15
9	9	794	67	70	749	790	222	55	4	1
10	10	118	9	23	-372	80	7	-253	37	4

Table 33 continued.

11	11	120	9	12	-186	41	2	257	79	5
12	12	523	25	25	487	350	35	-341	172	21
13	13	510	42	47	-401	210	40	480	300	70
14	14	605	9	14	-456	189	11	677	416	29
15	15	807	43	68	-11	0	0	-932	807	271
16	16	223	19	11	95	23	1	282	200	11
17	17	650	19	19	632	574	44	230	76	7
18	18	482	11	45	-1011	375	68	541	107	24
19	19	352	4	38	-1070	191	29	984	161	30
20	20	390	22	34	-348	114	16	-541	276	46
21	21	270	9	18	304	67	5	-529	203	18
22	22	256	13	12	-6	0	0	-389	256	15
23	23	178	8	15	476	175	11	-57	2	0
24	24	8	2	6	-127	6	0	66	2	0
25	25	37	4	7	172	24	1	124	13	0
26	26	328	12	15	340	136	8	403	192	14
27	27	325	5	12	224	32	2	-679	294	18
28	28	47	4	8	112	10	0	219	37	2
29	29	141	3	15	-332	30	2	642	111	8
30	30	205	2	7	-649	150	4	393	55	2
31	31	56	8	13	226	44	2	-119	12	1
32	32	856	22	42	889	600	103	580	256	53
33	33	260	8	16	564	224	14	226	36	3
34	34	131	10	20	-138	15	1	398	116	11
35	35	638	20	42	517	190	32	-794	448	93
36	36	846	23	59	1099	676	163	559	169	50
37	37	402	7	24	-652	180	17	725	222	26
38	38	43	1	13	-587	31	2	366	12	1
39	39	19	1	15	-140	1	0	605	18	1
40	40	49	1	10	-137	3	0	-569	46	2

COLUMN CONTRIBUTIONS : Plots

BASELINE SURVEY 1997

Plots 16 and 20 are outliers and therefore excluded

J	NAME	QLT	MAS	INR	k=1	COR	CTR	k=2	COR	CTR	r
1	1	91	51	41	-219	88	15	44	3	1	1.73
2	2	337	45	38	-313	170	26	-311	168	32	1.84
3	3	204	51	51	-433	272	57	89	11	3	1.73
4	4	85	48	45	-58	5	1	225	80	18	1.78
5	5	594	48	89	-518	215	76	688	379	164	1.78

Table 33 continued.

6!	6	!	565	46	40!	-483	395	63!	317	170	33!	1.82!
7!	7	!	318	42	41!	-424	273	45!	172	45	9!	1.90!
8!	8	!	276	43	24!	-228	134	13!	235	142	17!	1.88!
9!	9	!	87	44	35!	-145	39	6!	160	48	8!	1.86!
10!	10	!	362	43	46!	386	183	34!	-352	179	41!	1.89!
11!	11	!	481	43	44!	261	97	17!	-519	394	83!	1.88!
12!	12	!	777	45	40!	610	606	99!	324	171	34!	1.84!
13!	13	!	787	44	94!	1047	750	285!	233	37	17!	1.86!
14!	14	!	769	46	56!	629	476	107!	494	293	80!	1.82!
15!	15	!	60[illegible]	46	46!	527	405	75!	366	196	44!	1.82!
16!	17	!	12[illegible]	43	37!	56	6	1!	-253	119	22!	1.78!
17!	18	!	31[illegible]	47	58!	-500	293	69!	139	23	7!	1.80!
18!	19	!	423	45	44!	-158	37	7!	-510	385	84!	1.84!
19!	21	!	331	40	17!	23	2	0!	-308	329	27!	1.95!
20!	22	!	42	48	26!	98	26	3!	-78	16	2!	1.78!
21!	23	!	705	44	57!	48	3	1!	-786	703	198!	1.86!
22!	24	!	500	47	31!	-36	3	0!	-475	498	76!	1.80!

FOLLOW-UP SURVEY 1988 (Supplementary points)

Plot 14 is an outlier and therefore excluded

JS!	NAME!	QLT	MAS	INR!	k=1	COR	CTR!	k=2	COR	CTR!	r
23!	1	! 64	48	273!	-359	33	37!	346	31	42!	1.78!
24!	2	! 297	47	166!	-537	120	81!	652	177	145!	1.80!
25!	3	! 164	4[illegible]	145!	-483	112	66!	330	52	37!	1.80!
26!	4	! 79	[illegible]	65!	-217	51	13!	159	28	9!	1.78!
27!	5	! 72		63!	-237	63	16!	94	10	3!	1.78!
28!	6	! 200	47	133!	-418	90	48!	462	110	72!	1.80!
29!	7	! 53	45	177!	-266	26	19!	266	26	23!	1.84!
30!	8	! 29	48	122!	-89	5	2!	205	24	15!	1.78!
31!	9	! 38	46	70!	-156	24	7!	120	14	5!	1.82!
32!	10	! 42	43	86!	226	37	13!	84	5	2!	1.88!
33!	11	! 37	46	18[illegible]	-99	4	3!	302	33	30!	1.82!
34!	12	! 7	44	309!	4	0	0!	184	7	11!	1.86!
35!	13	! 2	43	320!	28	0	0!	108	2	4!	1.88!
36!	15	! 46	37	142!	-185	13	8!	294	33	23!	2.03!
37!	16	! 237	48	80!	-500	220	71!	-137	16	6!	1.78!
38!	17	! 94	48	109!	-356	87	38!	-107	7	4!	1.78!
39!	18	! 195	46	109!	-137	12	5!	-543	183	98!	1.82!
40!	19	! 52	47	155!	-341	52	32!	29	0	0!	1.80!
41!	20	! 203	47	67!	-369	141	38!	-246	63	21!	1.80!
42!	21	! 206	50	51!	-390	206	43!	-16	0	0!	1.73!
43!	22	! 276	48	38!	-342	215	33!	-182	61	12!	1.78!
44!	23	! 253	47	37!	-366	247	38!	-57	6	1!	1.80!
45!	24	! 128	46	107!	-384	93	40!	-233	35	18!	1.82!

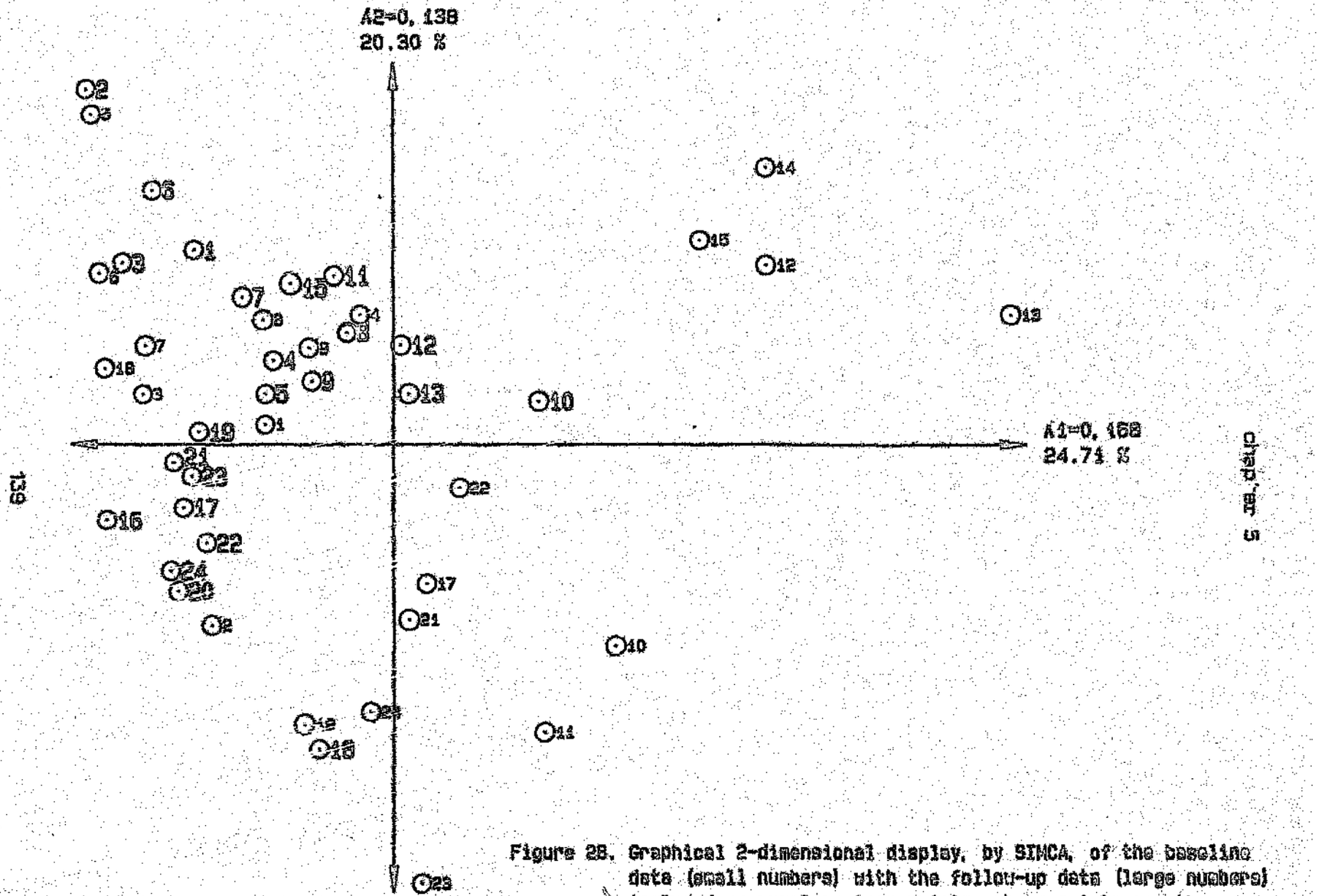

Figure 28. Graphical 2-dimensional display, by SIMCA, of the baseline data (small numbers) with the follow-up data (large numbers) included as supplementary points, where points are the location of plots and circles the 95% confidence limit.

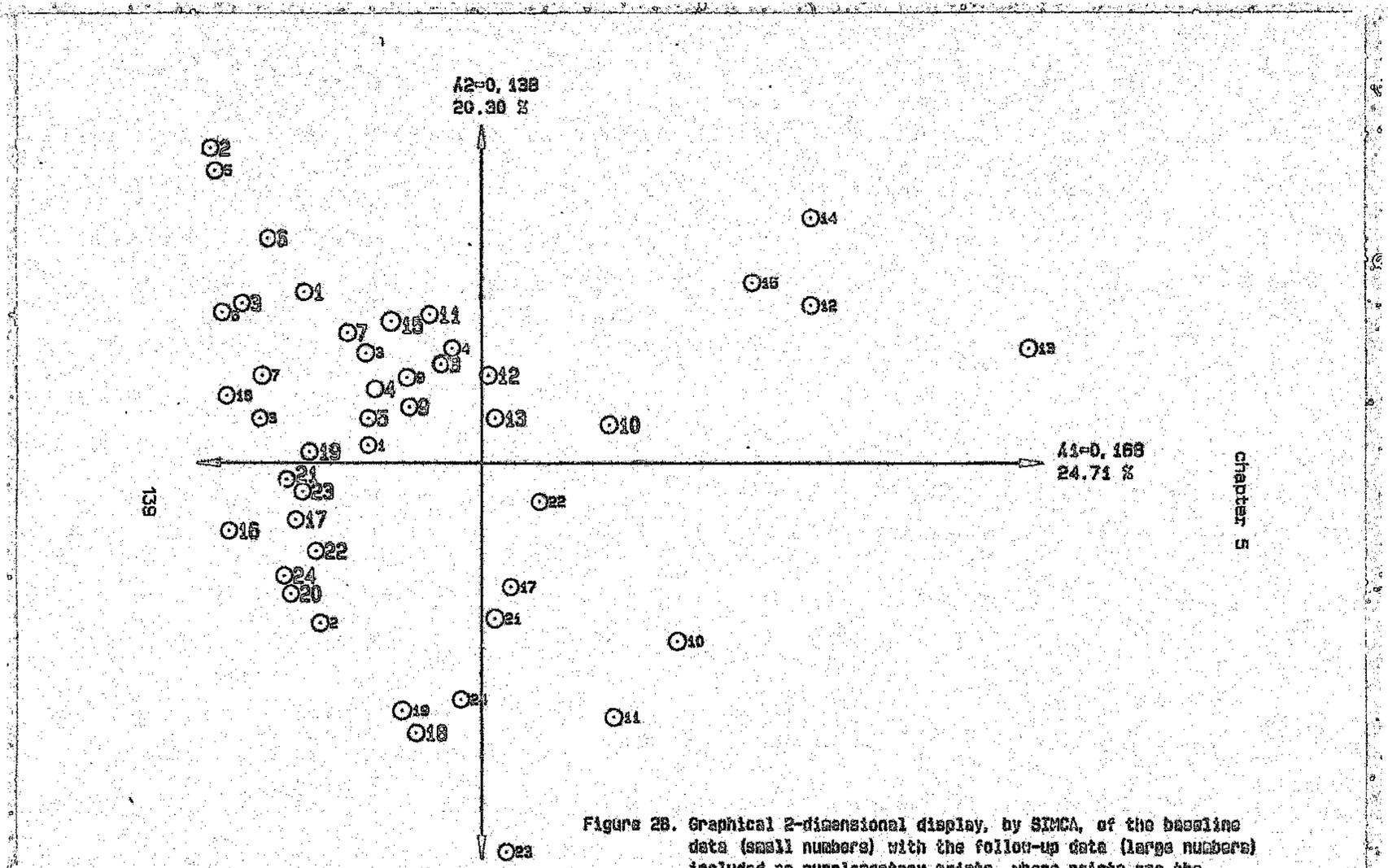

Figure 28. Graphical 2-dimensional display, by SIMCA, of the baseline data (small numbers) with the follow-up data (large numbers) included as supplementary points, where points are the location of plots and circles the 95% confidence limit.

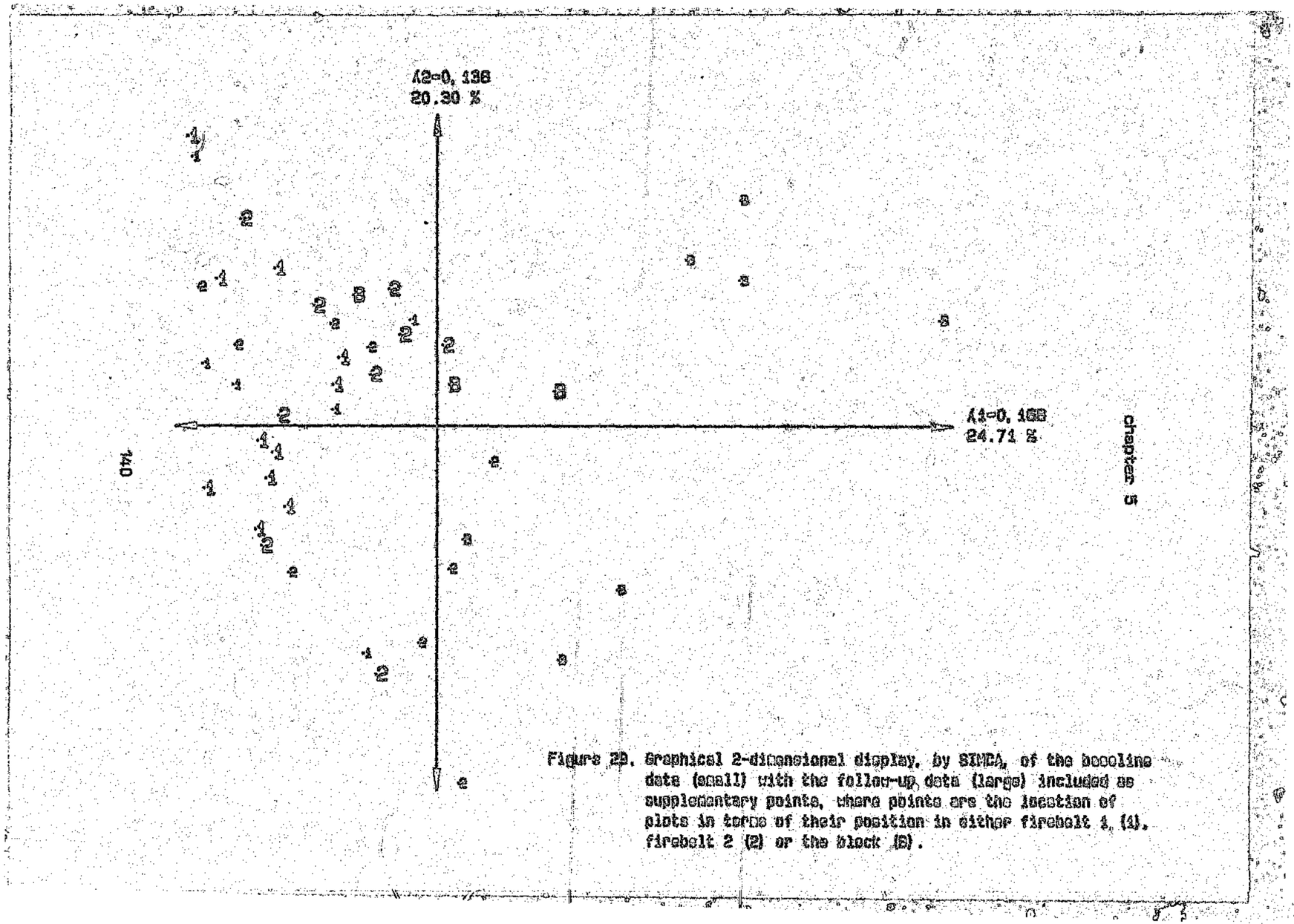

Figure 2D. Graphical 2-dimensional display, by SIMCA, of the baseline data (small) with the follow-up data (large) included as supplementary points, where points are the location of plots in terms of their position in either firebelt 1 (1), firebelt 2 (2) or the block (B).

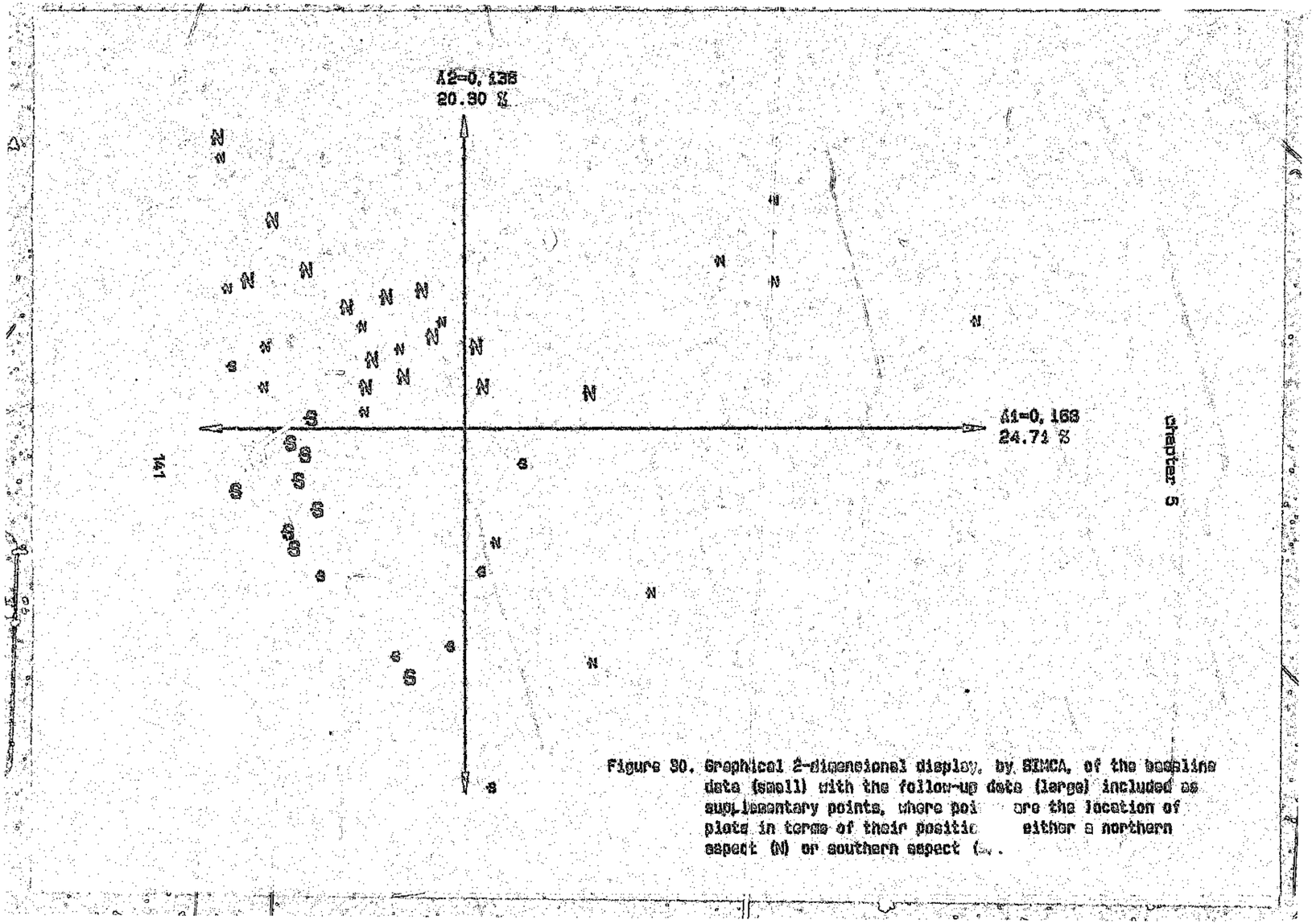

Figure 30. Graphical 2-dimensional display, by SIMCA, of the baseline data (small) with the follow-up data (large) included as supplementary points, where poi ore the location of plots in terms of their positic either a northern aspect (N) or southern aspect (S).

5.3 IMPACT STUDY

5.3.1 INTRODUCTION

A monitoring study aims at detecting change from the present state. The purpose of an impact study is to determine whether a specified impact causes change in a biological community and, if it does, to describe the nature of that change (Green 1979).

According to Green (1979) an impact study is best designed when it judges impact effects against previously collected baseline data. Green specifies four pre-requisites for such a design. First, the impact must not have yet occurred. Second, the type of impact and the time and place of occurrence must be known. Third, it must be possible to obtain measurements on all relevant biological and environmental variables in association with the individual samples, and fourth, an area that will not receive the impact must be available to serve as a control.

The only means of satisfying the requirements of such a design is through an experimental approach using an areas by times factorial design in which the evidence for impact is a significant areas by times interaction (Green 1979).

5.3.2 PROCEDURE

HYPOTHESIS

The hypothesis is based on the predictions made from the results of the monitoring procedure, as described in the previous section.

The null hypothesis (Ho) is that there will be no difference in plant species composition and abundance of individuals among plots that are (1) are and are not initially disturbed and (2) are subjected to a 12 month, 18 month 24 month and no follow-up stress.

DESIGN

The null hypothesis will be tested in a 2X4 factorial arrangement in a randomized block design. The two factors and their respective treatments are as follows.

Disturbance: disturbed; undisturbed
Follow-up stress: none; 12 months; 18 months; 24 months.

To avoid what Hurlbert (1984) has defined as pseudoreplication, the treatments must be interspersed with each other in space and time. In a manipulative experiment Hurlbert suggests that adequate interspersion is more or less automatically achieved through random allocation of the treatments. However he suggests that randomization is simply a way of achieving interspersion without bias, and that interspersion is the more critical feature. In view of this, the disturbance is allocated alternately to each plot and the follow-up stress allocated randomly to achieve proper interspersion as shown in figure 31.

Three blocks must be replicated within an homogeneous site giving a total of 24 plots. The size of each plot should be 20 X 20m, surrounded by a 5m firebelt (figure 31). The experiment can be repeated in different sites, to cover the inherent variability of the grasslands within the WWA.

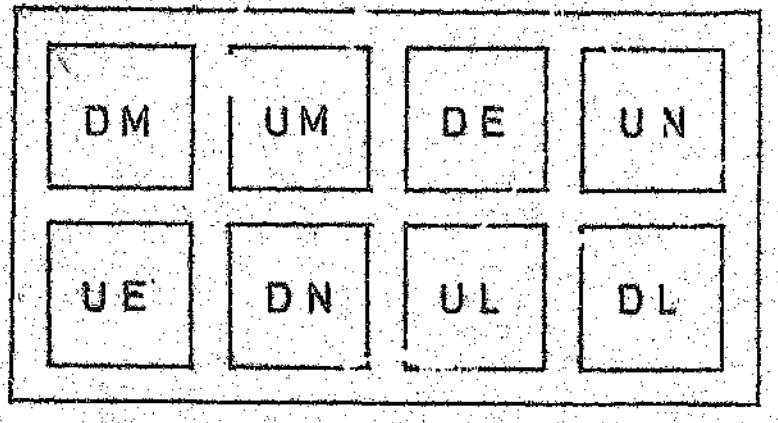

Disturbance: D = disturbed, U = undisturbed

Follow-up stress: N = none, E = 12 months, M = 18 months
L = 24 months

Figure 31. Block layout showing the combination of treatments.

TREATMENTS

The disturbance treatment should aim at weakening the established plants to the extent of temporarily disrupting the structure of the community. To achieve this a winter burn, applied during August, followed by three severe mechanical defoliations by clipping 30 days apart, is suggested.

Fire is proposed as the follow-up stress treatment to be applied at the prescribed frequency. The frequencies prescribed incorporate the effect of season. The 12 and 24 month cycle are summer burns and the 18 month cycle a winter burn.

DATA COLLECTION

Each plot must be sampled during January/February prior to the commencement of the experiment, which will serve as the baseline data, and at the same time each year thereafter for as long as the experiment continues. During sampling the nearest rooted living plant to each of 200 points within each plot must be recorded using the wheel point apparatus.

5.3.3 DATA ANALYSIS

The null hypothesis (Ho) can be tested using first, analysis of variance (ANOVA) based on sample scores along the first ordination axis. If this axis does not account for most of the variation in the species composition of the treatment plots, then an alternative approach must be used. This second approach is the use of ANOVA based on the density of selected species. As is often the case with density data, the data may not be normally distributed and a transformation necessary. The species selected should be those that are dominant prior to the application of the treatments and any which become common after the treatments (Walker 1988; Frost 1988).

The null hypothesis will be refuted if the largest difference in proportional species composition occurs in those treatments involving disturbance and follow-up stress.

5.4 CONCLUSION

The prescribed monitoring technique was developed through investigation of key issues and challenges arising from the paradigm of the VMU. The resulting monitoring system is considered to be

sufficiently rigourous for the detection of change in terms of the set objectives for the WWA. However it must be realised that this study is not a definitive study on vegetation monitoring and the developed technique will obviously need to be revised as the pooled national knowledge and thinking on vegetation monitoring adapts and improves. Such change, as with natural systems, is inevitable and necessary if we wish to progress over time. Similarly the practicality of the procedural guide-line can only be tested through implementation by management and will obviously be refined and improved through use.

A crucial constraint to any change in the technique is that old and new monitoring systems must be run concurrently for a calibration period. This ensures that data remains comparable over time and not discarded.

Finally, through the full implementation of the prescribed monitoring system the applied management can be evaluated and our understanding improved, thereby placing the management of the WWA ahead.

CHAPTER 6 CONCLUSION AND SUMMARY

6.1 CONCLUSION

This project arose from the need to place the management of the Wolkberg Wilderness Area (WWA) on a more testable, scientific foundation than is current practice. To achieve this the project aimed at the development of a grassland monitoring system through the investigation of key aspects of the National Vegetation Monitoring Workteam (VMW), with a view to furthering the objectives of this working group. The project was cast within the contemporary philosophy of science and addressed the following objectives.

1) Establish the minimum number of point observations to achieve a stated level of precision under varying plot size, to determine a field procedure for observing proportional species composition.
2) Describe, using the developed field procedure, how the precision of description increases with increasing sampling effort.
3) Test the efficiency of the field procedure based on an optimum cost effective sampling design.
4) Prescribe one or more systems for monitoring the grasslands of the WWA.
5) Prescribe impact studies of man-induced disturbances to complement the monitoring and to facilitate identification of possible causes of likely future change.

These objectives were reached, thereby contributing to the deficiencies of current monitoring theory and practice through an improved knowledge in (1) the selection of an appropriate sampling design, (2) the cost-effectiveness of the monitoring effort, (3) the means of relating monitoring to the assessment of operational goal attainment and (4) the practicality of implementing an efficient monitoring system.

Implementation of the developed monitoring system will enable the determination of the nature and direction of change and facilitate speculation about the likely causes of detected change. This places the management of the WWA on a testable basis within the framework of adaptive management, which implies a process of learning about system responses through experience. In other words where the best action for any system state cannot be fixed *a priori* it must instead be established through sequential re-assessment of system states and dynamic relationships (Walters and Hilborn 1978).

To ensure the full benefit of the developed monitoring system, it is necessary to ascertain how much change is acceptable in terms of the overall objective. This is achieved through attaching permissible limits to the defined operational goals, which is logically the next phase in the implementation of the developed system. Due to the importance of permissible limits to change this aspect demands a detailed investigation and is clearly the direction in which further research in the WWA should be going.

6.2 FINAL SUMMARY

The approach followed in this study was to select through a detailed pilot study, an efficient, cost-effective sampling design. This design was then tested through an iterative procedure of baseline and follow-up surveys aiming at a final monitoring system of known descriptive and predictive ability. As monitoring is the assessment of the degree of attainment of or departure from management goals, a procedure was developed for setting and prioritising operational goals within the constraints of an overall objective. The results of the research were finally incorporated into a procedural guide-line for implementation by the reserve management personnel.

The pilot study aimed at reducing subjectivity in the choice of sampling design. The relevant issues are sample plot size, the number of point observations required per plot, sampling intensity or the number of plots per site and the level of description associated with increasing sampling effort. The field procedure used was a point-based, nearest plant method for measuring proportional species composition in square plots.

Three sample plot sizes, namely 20 X 20m, 30 X 30m and 40 X 40m, were tested without replication. The 40 X 40m plot was found to yield the best results and accepted for this study. The optimum number of points per plot was determined using the REPSIM-SAS macro of Duckworth and Walker (1988), based on replicate similarity of randomly selected sets of increasing number of points from the total data set. The resulting replicate similarity data was modelled using non-linear regression, from which it was calculated that a minimum of 200 points per plot retrieves a high percentage (84.4%) of replicate similarity. 200 points per plot was considered to be a practical cost-efficient sampling intensity for application in a detailed monitoring study.

The number of plots per site or sampling intensity was concerned with first, the minimum number of plots required to achieve a known level of description and second, how the level of description increases with increasing sampling effort. The data was analysed by two different procedures, namely a replicate similarity and a replicate ordination

approach with the aim of (1) improving the robustness of inferences drawn from the results and (2) enabling a comparison of the cost-effectiveness of the two procedures. The results of the two respective analysis procedures were modelled using non-linear regression . From the regressions judged to best describe the data, models were developed by which the number of plots required and the associated level of description based on the size of the study site can be calculated.

Having developed a sampling design through a detailed pilot study, it was necessary to evaluate the results obtained, through this design, in terms of sensitivity and power in detecting true vegetational change. From this, the grounds on which a null hypothesis (Ho), of there being no significant difference between abundance or relative abundance of baseline and follow-up surveys, will fail were formulated. Sensitivity is described in terms of the ability to avoid a Type I error, and power in terms of the ability to avoid a Type II error. Within a monitoring context a Type I error means a change is proclaimed when no change exists and a Type II error means that no change is detected when a change does in fact exist.

The procedure followed was to compare baseline and follow-up surveys through an iterative procedure with known levels of simulated change. Baseline data was collected from a 43.5 ha study site using the developed sampling design. A follow-up survey was executed immediately after the baseline survey, before any change (0%) could possibly have occurred in the vegetation. The follow-up data was then artificially changed by 10, 20 and 40% to yield four sets of follow-up data. The baseline and each follow-up data set were compared through the testing of the above-mentioned Ho using two different analysis procedures. The analysis procedures were (1) a similarity coefficient procedure based on the Sorenson quantitative index and (2) an ordination procedure based on the frequency distribution of samples along the primary ordination axis, using DECORANA.

The similarity coefficient procedure was found to be suitable as an early warning device, at a 90% confidence level, detecting vegetation change before it becomes serious or far advanced. The ordination procedure was found to be suitable for the identification of the nature and cause of change. The proposed monitoring system consists of a combination of these two procedures.

A central requirement for the implementation of a monitoring system is that correctly identified and formulated goals exist. To gain the full benefit of the developed monitoring system it was necessary to devise a practical procedure for translating an objective into operational goals and subsequently prioritising such goals. The

procedure was developed through an initial workshop approach and refined through application on various reserves, resulting in the present system comprised of the following nine steps.

1) Develop resource inventory lists.
2) Define an overall objective/s.
3) Select panelists.
4) Individually list biotic components requiring specific management and combine the individual lists into a single overall list.
5) Refine the overall list into a final list.
6) Present background information on the listed biotic items.
7) Compare each item on the final list with every other and calculate the priority score of each listed item.
8) Calculate the consistency coefficient of each panelist.
9) Re-phrase each listed item into an operational goal.

The procedure is considered to be practical, with a broad range of application, particularly satisfying an important need in the implementation of a vegetation monitoring system.

The benefit of a monitoring system can only be realised through implementation. Implementation is considered to have taken place when the target group identified for the research utilises the research findings (and /or the associated skills and facility of the researcher) in the planned manner and within the planned time interval, as is shown by their concrete actions (Gouws 1990).

Due to this growing awareness of the need for implementation by the researcher, the results of this study are incorporated into a detailed procedural guide-line aimed at the manager of the wilderness area. The 14 steps of the monitoring system are described in detail using a case study, which involved a baseline and follow-up survey one year later, as an example. This procedural guide-line is not definitive and will obviously be refined and improved through use.

REFERENCES

Acocks J.P.H. 1975. Veld types of Southern Africa. Memoirs of the botanical survey of South Africa, no. 40.

Austin M.P. 1976a. On non-linear species response models in ordination. Vegetatio, 33: 33-41.

Austin M.P. 1976b. Performance of four ordination techniques assuming three different non-linear species response models. Vegetatio, 33: 43-49.

Beales E.W. 1973. Ordination: mathematical elegance and ecological naivete. Journal of Ecology, 61: 23-35.

Bock R.D. and Jones L.V. 1968. The measurement and prediction of judgement and choice. Holdenday, San Francisco.

Borland Inc. 1989. Quattro Pro, superior spredsheet power. Borland International, Inc., California.

Bray J.R. and Curtis J.T. 1957. An ordination of the upland forest communities of Southern Wisconsin. Ecological Monographs, 27: 325-349.

Bulpin T.V. 1952. Lost trails of the Lowveld, 3rd ed. Howard B Timmins, Cape Town.

Bunge M. 1967. The search for truth: studies in the foundations, methodology and philosophy of science. Scientific Research, vol. 3, Springer-Verlag , New York.

Cain S.A. and Castro G.M. de O. 1959. Manual of vegetation analysis. Harper, New York.

Caplan N. 1990. The use of achievement and evaluation studies on disadvantaged groups in the formulation of social policy. Paper presented at the Knowledge Utilisation conference, Human Sciences Research Council, Pretoria.

Connell J.H. 1978. Diversity in tropical rain forests and coral reefs. Science, 199: 1302-1309.

Coombes P.J. 1987. Policy memorandum: Wolkberg Wilderness Area (WWA), 1985 - 1990, first revision. Unpublished final report, Forestry Branch, Dept. of Environment Affairs, Nelspruit.

Corvello T.J. 1970. Analysis of character variation in ecology and systematics. Annual review of Ecology and Systematics, 1: 55-98.

Cousens F.E. 1985. Theory, hypothesis and experimental design in ecology. British Ecological Society Bulletin, 16: 76-77.

Daubenmire R. 1968. Plant communities. Harper and Row, New York.

De Beer C.S. 1990. The impact of the scientific venture on society. Paper presented at the Knowledge Utilisation conference, Human Sciences Research Council, Pretoria.

Diamond J.M. 1975. Assembly of species communities. In: M.L. Cody and J.M. Diamond (eds). Ecology and evolution of communities, pp 342-344. Belknap Press, Cambridge, Massachusetts.

Duckworth A.C. and Walker R.H. 1988. REPSIM - SAS Macros for determining efficient sampling intensities by replicate similarity. Occasional report no. 30, Foundation for Research Development, Council for Scientific and Industrial Research, Pretoria.

Edwards D. 1983. A broad-scale structural classification of vegetation for practical purposes. Bothalia, 14 (3&4): 705-712.

Edwards P.J. 1968. The long term effects of burning and mowing on the basal cover of two veld types in Natal. South African Journal of Agricultural Science, 11: 131-140.

Everson C.S. 1985. Ecological effects of fire in the montane grasslands of Natal. Unpublished PhD thesis, University of Natal.

Everson C.S and Clarke G.P.V. 1986. A comparison of six methods of botanical analysis. Proceedings of the Grassland Society of Southern Africa, in press.

Ferguson G.A. 1976. Statistical analysis in psychology and education. McGraw-Hill, Tokyo.

Ferrar A.A. (ed.) 1983. What causes change - Getting at the facts. South African National Scientific Programmes Report no. 69, Council for Scientific and Industrial Research, Pretoria.

Foran B.D. 1976. The development and testing of methods for assessing the condition of three grassveld types in Natal. Unpublished MSc thesis, University of Natal, Pietermaritzburg.

Foran D.B., Tainton N.M. and Booysen P. de V. 1978. The development for assessing veld condition in three grassveld types in Natal. Proceedings of the Grassland Society of Southern Africa, 13: 27-33.

Frost P.G.H. 1988. The dependence of recovery of stressed or disturbed savanna on environmental constraints on plant establishment and growth. In: B.H. Walker and J. Menaut (eds). Research procedure and experimental design for savanna ecology and management. RSSD, Australia.

Gauch H.G., Jr. 1982. Multivariate analysis in community ecology. Cambridge University Press, Cambridge.

Gauch H.G., Whittaker R.H. and Wentworth T.R. 1977. A comparative study of reciprocal averaging and other ordination techniques. Journal of Ecology, 65: 157-74.

Gauch H.G. and Whittaker R.H. 1972. Comparison of ordination techniques. Ecology, 53(5): 868-875.

Gibbs Russell G.E., Reid C., van Rooy J. and Smook L. 1985. List of species of Southern African Plants. Memoirs of the Botanical Survey of South Africa, 2nd ed. part 1, no. 51. Botanical Research Institute, Pretoria.

Gibbs Russell G.E. and Smook L. 1980. Names of Southern African grasses: name changes and additional species reported since 1955. Proceedings of the Grassland Society of Southern Africa, 15: 89-97.

Goodall D.W. 1952. Some considerations in the use of point quadrats for the analysis of vegetation. Australian Journal of the Scientific Research Service, 5: 1-41.

Goodall D.W. 1978. Sample similarity and species correlation. In: R.H. Whittaker (ed.), Ordination of plant communities. W Junk Publishers, The Hague.

Gouws D.J. 1990. Research with a view to implementation - managing the complexity and dynamics of the research process from initiation to implementation. Paper presented at the Knowledge Utilisation conference, Human Sciences Research Council, Pretoria.

Green R.H. 1979. Sampling design and statistical methods for environmental biologists. John Wiley and Sons, New York.

Greenacre M.J. 1984. Theory and applications of correspondence analysis. Academic press, London.

Greenacre M.J. 1986. SIMCA: a program to perform simple correspondence analysis. American Statistician, 51: 230-231.

Greig-Smith P. 1983. Quantitative plant ecology, 3rd ed. Blackwell Scientific Publications, Oxford.

Hall C A S. and Day J.W. 1977. Ecosystem modelling in theory and practice. John Wiley & Sons, New York.

Harc M.B. 1986. Grazing dynamics in highland sourveld. Unpublished MSc thesis, University of Natal, Pietermeritzburg.

Hill M.O. 1979a. DECORANA - A FORTRAN program for detrended correspondence analysis and reciprocal averaging. Ecology and Systematics, Cornell University, Ithaca, New York.

Hill M.O. 1979b. TWINSPAN - a FORTRAN program for arranging multivariate data in an ordered two-way table by classification of the individuals and attributes. Ecology and Systematics, Cornell University, Ithaca, New York.

Hill M.O. and Gauch H.G. 1980. Detrended correspondence analysis, an improved ordination technique. Vegetatio, 42: 47-58.

Rowe-Rowe D.T. and Lowry P.B. 1982. Influence of fire on small-mammal populations in the Natal Drakensberg. South African Journal of Wildlife Research, 12(4): 130-139.

Salt G.W. 1983. Roles: their limits and responsibilities in ecological and revolutionary research. American Naturalist, 122: 697-705.

Scheepers J.C. 1978. Vegetation of Westfalia Estate on the North-eastern Transvaal Escarpment. Memoirs of the Botanical Survey of South Africa, Botanical Research Institute, Pretoria.

Schwellnus J.S.I., Engelbrecht L.N.J., Coetzee F.I., Russell H.O., Malherbe S.J., van Rooyen D.P. and Cooke R. 1962. The Geology of the Olifants River area. Government Printer, Pretoria.

Scott J.D. 1952. Management of range lands (veld) in Africa. Proceedings of the sixth International Grassland Congress, 1: 477-483.

Shafer E.L. and Davis J.B. 1989. Making decisions about environmental management when conventional economic analysis cannot be used. Environmental Management, vol. 13, 2: 189-197.

Shimwell D.W. 1971. The description and classification of vegetation. Sidgwick and Jackson, London.

Siegfried W.R. and Davies B.R. 1982. Conservation of ecosystems, theory and practice. South African National Scientific Programmes Report no. 61, Council for Scientific and Industrial Research, Pretoria.

Sinclair A.R.E. 1983. Management of conservation areas as ecological baseline controls. In: R.N. Owen-Smith (ed.) Management of large mammals in African conservation areas. Haum, Pretoria.

Smith T.M. and Walker B.H. 1983. The role of competition in the spacing of savanna trees. Proceedings of the grassland society of Southern Africa, 18: 159-164.

Snedecor G.W. and Cochran W.G. 1967. Statistical methods. Iowa State University Press, Iowa.

Sokal R.R and Rohlf F. 1981. Biometry. Freeman, San Francisco.

Solomon D.L. 1979. On a paradigm for mathematical modelling. In: G.P. Patil and M. Rosenzweig (eds). Contemporary Quantitative Ecology and related Ecometrics, pp 231-50. Burtonsville, MD: International Co-operative.

Southwood T.R.E. 1978. Ecological methods. Chapman and Hall, London.

Staples R.R. 1926. Experiments in veld management. First Report. Science Bulletin 49, Department of Agriculture, Union of South Africa.

Staples R.R. 1930. Studies in veld management. A second report on certain veld burning and grazing experiments. Science Bulletin 91, Department of Agriculture, Union of South Africa.

Walker B.H. 1970. An evaluation of eight methods of botanical analysis on grasslands in Rhodesia. Journal of Applied Ecology, 7: 403-416.

Walker B.H. 1988. The existence of equilibrium properties of disturbed savannas. In: B.H. Walker and J. Menaut (eds). Research procedure and experimental design for savanna ecology and management. RSSD, Australia.

Walker R.S. 1987. Monitoring species composition in mountain catchment grasslands. Unpublished MSc thesis, Dept. of Grassland Science, University of Natal, Pietermaritzburg.

Walters C.J. and Hilborn R. 1978. Ecological optimization and adaptive management. Annual review of ecology and systematics, 9: 157-188.

Westfall R.H. 1985. Stratification of vegetation prior to sampling: recommended procedures. Technical Note ETC 7, Botanical Research Institute, Pretoria.

Whipp A.J. 1979. Policy memorandum for Serala Wilderness Area. Unpublished internal report, Department of Forestry.

Whittaker R.H. 1952. A study of summer foliage insect communities in the Great Smokey Mountains. Ecological Monographs, 22: 1-44.

Whittaker R.H. 1966. Forest dimensions and production in the Great Smokey Mountains. Ecology, 47: 103-121.

Whittaker R.H. 1967. Gradient analysis of vegetation. Biol. Rev., 49: 207-264.

Whittaker R.H. 1972. Evolution and measurement of species diversity. Taxonomy, 21: 213-215.

Yeaton R.I., Travis J. and Gilinsky E. 1977. Competition and spacing in plant communities. The Arizona upland association. Journal of Ecology, 65: 587-595.

Yeaton R.I. and Cody M.L. 1978. Competition and spacing in plant communities: the Northern Mohave Desert. Journal of Ecology, 64: 689-696.

Zar J.H. 1974. Biostatistical Analysis. Prentice Hall, London.

Hinds W.T. 1984. Towards monitoring of long term trends in terrestrial ecosystems. Environmental Conservation, 11: 11-18.

Holling C.S. 1973. Resilience and stability of systems. Annual review of ecology and systematics, 4: 1-32

Holling C.S. 1978. Adaptive environmental assessment and management. Wiley and Sons, New York.

Hume L. and Day J.C. 1974. The determination of an efficient sampling intensity for studying beta diversity in plant communities. Canadian Journal of Botany, 52: 189-199.

Hunt R. 1982. Plant growth curves. The functional approach to plant growth analysis. Edward Arnold Publishers, London.

Hurlbert S.H. 1984. Pseudoreplication and the design of ecological field experiments. Ecological Monographs, 54(2): 187-211.

Jeffers J.N.R. 1978. An introduction to system analysis with ecological applications. Arnold, London.

Kendall M.G. 1970. Rank correlation methods, 4th ed. Charles Griffen & Co. Ltd., London

Kershaw K.A. 1973. Quantitative and dynamic plant ecology. 2nd. ed. Elsevier, New York.

Kershaw K.A. and Looney J.H.H. 1985. Quantitative and dynamic plant ecology. Edward Arnold, Victoria.

Killick D.J.B. 1963. An account of the plant ecology of the Cathedral Peak area of the Natal Drakensberg. Memoirs of the Botanical Survey of South Africa, 34: 1-78.

Krige E.J. and Krige J.D. 1943. The realm of a rain queen. Oxford University Press, London.

Kruger F.J. 1984. Effects of fire on vegetation structure and dynamics. In: P. de V. Booysen and N. M. Tainton (eds). Ecological effects of fire in South African Ecosystems. Ecological studies 48. Springer-Verlag, Berlin.

Lane Poole C.E. 1909. Annual report, Woodbush Forest Station. Annual Report, Transvaal Department of Agriculture, (1907-8): 148-152.

Larsen J.A. 1965. The vegetation of the Ennadai Lake Area, N.W.T. Studies in subarctic and arctic bioclimatology. Ecological Monographs, 35: 37-59.

Loehle C. 1987. Hypothesis testing in ecology: psychological aspects and the importance of theory maturation. The quarterly review of biology, vol. 62, no. 4.

Miller K. and Child G. 1983. Goals for protected areas: management objectives for Nature Conservation. In: A.A. Ferrar (ed.), Guidelines for the management of large mammals in African Conservation areas. S.A.N.S.P. report no. 89, Council for Scientific and Industrial Research, Pretoria.

Mohler C.L. 1987. COMPOSE, a program for formatting and editing data matrices. Microcomputer Power, Ithaca, New York.

Mueller-Dombois D. and Ellenberg H. 1974. Aims and methods of vegetation ecology. John Wiley & Sons, New York.

Noy-Meir I. 1979. Graphical models and methods in ecology. In: G. P. Patil and M. Rosenzweig (eds). Contemporary quantitative ecology and related ecometrics, pp 453-72. Burtonsville, MD: International Co-operative.

Odum E.P. 1971. Fundamentals of ecology. W.B. Saunders Co., Philadelphia.

Orloci L. 1978. Multivariate analysis in vegetation research. 2nd. ed. W. Junk Publishers, The Hague.

Peet R.K. 1974. The measurement of species diversity. Annual review of ecology and systematics, 5: 285-307.

Pielou E.C. 1962. The use of plant-to-neighbour distances for the detection of competition, Journal of Ecology, 50: 357-367.

Pielou E.C. 1966. The measurement of diversity in different types of biological collections. Journal of Theoretical Biology, 13: 131-144.

Pielou E.C. 1969. An introduction to mathematical ecology. Jhon Wiley, New York.

Pielou E.C.1984. The interpretation of Ecological Diversity. Wiley and Sons, New York.

Platt J.R. 1964. Strong inference, Science, 146: 347-353.

Popper K.R. 1959. The logic of scientific discovery. Hutchinson, London.

Popper K.R. 1963. Conjectures and refutations. The growth of scientific knowledge. Harper and Row, New York.

Popper K.R. 1983. Realism and the aim of science. Hutchinson, London.

Price P.W. 1984. Alternative paradigms in community ecology. In: P.W. Price, C.N. Slobodchikoff and W.S. Gand (eds). A new ecology. Novel approaches to interactive systems. Wiley, New York.

Richards F.J. 1959. A flexible growth function for empirical use. Journal of Experimental Botany, 10(29): 290-300.

Romesburg H.C. 1981. Wildlife science: gaining reliable knowledge. Journal of Wildlife Management, 45(2): 293-313.

Macdonald I. and Grimsdell J. 1983. What causes change? Getting at the facts. In: A.A. Ferrar (ed.), Guidelines for the management of large mammals in African conservation areas, SANSP Report no. 69, Council for Scientific and Industrial Research, Pretoria.

Macdonald I.A.W. 1986. Report on the rapid survey of invasive alien organisms in the Wolkberg Wilderness Area, North-eastern Transvaal. Unpublished internal report, Percy Fitzpatrick Institute, University of Cape Town.

Magurran A.E. 1988. Ecological diversity and its measurement. Croom Helm, London.

McNaughton S.J. 1983. Serengeti grassland ecology: the role of composite environmental factors and contingency in community organisation. Ecological Monographs, 53: 291-530.

Mentis M.T., Collinson R.F.H. and Wright M.G. 1980. The precision of assessing components of the condition of moist tall grassveld. Proceedings of the Grassland Society of Southern Africa, 15: 43-46.

Mentis M.T. 1973. A comparative ecological study of Greywing and Redwing Francolins in the Natal Drakensburg. Unpublished MSc thesis, University of Stellenbosch.

Mentis M.T. 1980. Towards a scientific management of terrestrial ecosystems. South African Journal of Science, 76: 536-540.

Mentis M.T. 1981. Evaluation of the wheel-point and step-point methods of veld condition assessment. Proceedings of the Grassland Society of Southern Africa, 16: 89-94.

Mentis M.T. 1982. A simulation of the grazing of sour grassveld. Unpublished PhD thesis, University of Natal, Pietermritzburg.

Mentis M.T. 1984. Monitoring in South African Grasslands. South African National Scientific Programmes Report No. 91, Council for Scientific and Industrial Research, Pretoria.

Mentis M.T. 1988. Hypothetico-deductive and inductive approaches in ecology. Functional Ecology, 2: 5-14.

Mentis M.T. 1988. Vegetation monitoring workshop III, Foundation for Research Development, Occasional report no. 39, Council for Scientific and Industrial Research, Pretoria.

Mentis M.T. and Collinson R.F.H 1979. Management goals for wildlife reserves in grassveld and bushveld. Proceedings of the Grassland Society of Southern Africa 14: 71-74.

Middelton B.J., Pitman W.V., Midgley D.C. and Robertson R.M. 1981. Surface water resources of South Africa, Vol 1: Drainage Regions AB, the Limpopo-Olifants system. Report no. 10/81. Hydrological Research Unit.

Steel R.G. and Torrie J.H. 1960. Principles and procedures of statistics. McGraw-Hill Book Company, New York.

STSC, Inc. 1986. STATGRAPHICS - Instruction manual. STSC, Inc., U.S.A.

Sullivan J.R. and Nixon E.S 1971. A vegetational analysis of an area in Nacogdoches County, Texas. Texas Journal of Science, 23: 67-79.

Te-Hsiung Sun T. 1990. Research findings and the formulation/revision of policy: a risky interaction. Paper presented at the Knowledge Utilisation conference, Human Sciences Research Council, Pretoria.

Ter Braak C.J.F. 1988. CANOCO - a FORTRAN program for canonical community ordination by (partial) (detrended) (canonical) correspondence analysis, principal components analysis and redundancy analysis (version 2.1). Technical report: LWA-88-02. Agricultural Mathematics Group, Wageningen, The Netherlands.

Tidmarsh C.E.M. and Havenga C.M. 1955. The wheel point method of survey and measurement of semi-open grasslands and Karoo vegetation in South Africa. Memoirs of the Botanical Survey of South Africa, no. 29. Botanical Research Institute, Pretoria.

Twiss B. 1990. Advances in technological innovation; problems and human factors. Paper presented at the Knowledge Utilisation conference, Human Sciences Research Council, Pretoria.

van der Maarel E. 1979. Transformations of cover-abundance values in phytosociology and its effect on community similarity. Vegetatio, 39: 97-114.

van der Maarel E. and Leertouwer J. 1967. Variation in vegetation and species diversity along local environmental gradients. Acta Botanica Neerlandica, 16: 211-221.

van der Merwe G.H. 1980. Voorgestelde langtermynbeplanning van die Wolkberggebied. Unpublished internal report, Department of Forestry.

van der Zel D.W. 1981. Optimum mountain catchment management in Southern Africa. South African Forestry Journal, 116.

von dem Bussche G.H. 1980. Serala Staatsbos, brandplan vir die periode 1980/81 tot 1984/85. Unpublished internal report, Forestry Branch, Dept. of Environment Affairs, Louis Trichardt.

von dem Bussche G.H. 1983. Notes on the vegetation of the Wolkberg Wilderness Area. Unpublished internal report, Forestry Branch, Department of Environment affairs.

von Gadow K. 1978. Setting goals in forest management. South African Forestry Journal 106: 2-9.

Author: Coombes Peter John.
Name of thesis: Development Of A Grassland Monitoring System For The Management Of The Wolkberg Wilderness Area.

PUBLISHER:
University of the Witwatersrand, Johannesburg
©2015

LEGALNOTICES:

Copyright Notice: All materials on the University of the Witwatersrand, Johannesburg Library website are protected by South African copyright law and may not be distributed, transmitted, displayed or otherwise published in any format, without the prior written permission of the copyright owner.

Disclaimer and Terms of Use: Provided that you maintain all copyright and other notices contained therein, you may download material (one machine readable copy and one print copy per page)for your personal and/or educational non-commercial use only.

The University of the Witwatersrand, Johannesburg, is not responsible for any errors or omissions and excludes any and all liability for any errors in or omissions from the information on the Library website.