

https://dspace.org/

Problems experienced with low-profile dynamic splints

Van Velze, Cornelia Anna

1994
https://hdl.handle.net/10539/27528

Downloaded from a DSpace repository. https://dspace.org/

PROBLEMS EXPERIENCED WITH LOW-PROFILE DYNAMIC SPLINTS

CORNELIA ANNA VAN VELZE

A thesis submitted to the Faculty of Medicine, University of the Witwatersrand, Johannesburg for the degree of Master of Science, Occupational Therapy

Pretoria, 1994

ABSTRACT

Many patients have been supplied with dorsal dynamic finger extension splints for improvement of the range of motion of stiff finger joints. The design of the splint has been developed and improved over time, but the amount of force which was applied to a finger was determined intuitively. This research was undertaken to quantify the force exerted on a finger and to design a splint which would ensure that the amount of force exerted on a finger was constant and reliable. Since six studies were undertaken as part of the research, different protocols were developed for each.

The findings of the studies can be summarised as follows:

* similar tensions in a variety of rubber bands can not consistently be identified;
* rubber bands which are more or less equal in length, thickness and width do not undergo the same amount of elongation when identical weights are attached to them;
* friction between the outrigger and the traction unit plays a major role in determining how much force is exerted on a finger;
* a layer of Teflon paint over the outrigger coupled with a nylon fishing line traction unit causes the least amount of friction;
* stainless steel tension springs provide a more reliable and consistent force than rubber bands.

Finally a splint was designed, taking into account the results of the six studies. The splint consists of a thermoplastic base with Velcro attachment straps, a pre-notched copper coated welding rod dipped in Teflon paint at least 14 days before use, a traction unit made from a stainless steel tension spring with a tension of 3g/mm, a piece of nylon fishing line and a finger sling.

Although the splint was designed to ensure that the force exerted on a finger is consistent and quantifiable, it should still be tested clinically to ascertain whether the design is really practical.

DECLARATION

I declare that this thesis is my own unaided work. It is being submitted for the degree of Master of Science, Occupational Therapy, to the University of the Witwatersrand, Johannesburg. It has not been submitted before for any degree or examination to any other University.

C A VAN VELZE

.....C.A.v.Velze.....6th day of ...December..... , 1994

ACKNOWLEDGEMENTS

The author wishes to thank the following persons:

* Mrs H Farmer, for her supervision and encouragement

* Prof ME Concha, for her guidance

* Mrs M Steyn, for her time in typing and re-typing the manuscript

* Mr T Ackerman for his help in the design and manufacture of the jig used to form the outrigger notches, as well as for his enthusiasm for the project

* Mrs E Viljoen for doing all the statistical calculations and her patient explanations

* Dr SJ Reinach for his input with regards to the design of the studies and his statistical advice

* Ms S Lee and Mr P Cheshire for the time spent reading the manuscript and correcting the language used

* My fellow post-graduate students for their encouragement

* My parents, who gave me the chance of becoming an occupational therapist in the first place

CONTENTS

LIST OF TABLES . . . . . (iii)
LIST OF FIGURES . . . . . (iv)
LIST OF GRAPHS . . . . . (vi)

CHAPTER	CONTENTS	PAGE
I	**INTRODUCTION TO THE STUDY**	1
	Background to the study	2
	Problem statement	3
	Format of the study	4
	Definition of terms	5
II	**REVIEW OF THE LITERATURE**	8
	Introduction	8
	Rationale for splinting	9
	Purpose of dynamic splinting	12
	How much force is necessary	13
	Available sources of force	15
	How to determine the force exerted by a splint	15
	The low-profile splint	17
	Friction over the outrigger	19
	Dynamic splints described by different authors	21
	Conclusion	22
III	**STUDY 1**	23
IV	**STUDY 2A**	27
	STUDY 2B	33
V	**STUDY 3**	37
VI	**STUDY 4**	49
VII	**STUDY 5**	56
VIII	**STUDY 6**	68
IX	**CONCLUSION**	85

LIST OF REFERENCES	91
APPENDIX 1	93
APPENDIX 2	94

LIST OF TABLES

Number	Contents	Page
1	Rubber band length (mm) when the tension felt right	25
2	Number of correct guesses of tension for each trial in study 2A	32
3	Mean length (mm) of stretched rubber bands with 300g on each	35
4	Types of friction tested in study 3	44
5	Splints used to measure each type of friction	45
6	Analysis of variance	46
7	Means of all the friction types	47
8	Paired comparisons of three methods to determine friction	47
9	Analysis of variance to compare the four materials	53
10	Mean lengths (mm) of the rubber bands for the four materials	54
11	Comparison in cost: Welding rod vs Spectra-Medic system (1990)	58
12	Sequence of springs and outriggers (1)	77
13	Sequence of springs and outriggers (2)	77
14	Mean of the differences in tension spring length for the four different outriggers	78
15	P-values for each comparison	79
16	Mean of the differences in tension spring length for the four different outriggers	80
17	P-values for each comparison	80
18	Comparison between welding rod outrigger and the Spectra-Medic system	83

LIST OF FIGURES

Number	Contents	Page
1.	The dorsal dynamic finger extension splint	2
2.	The modified Haldex gauge	17
3.	The dorsal dynamic finger extension splint	24
4.1	The wooden box used in study 2A	27
4.2	Outrigger and traction unit from above	28
4.3	Attachment of rubber band to the box	29
4.4	Sandbags attached to traction units	30
4.5	The researcher feeling the amount of tension	30
4.6	Measurement of stretched rubber band	34
5.1	Measurement of rubber band to group together bands of similar length	38
5.2	Marking the rubber band	39
5.3	300g hooked on fishing line	40
5.4	The weight pulled down by the force of gravity	41
5.5	The weight is pulled down until the rubber band touches the outrigger	42
5.6	The rubber band is allowed to return to its original length	42
5.7	No friction present	43
6.	The outrigger showing the thermoplastic stoppers	50
7.1	The stepped outrigger	64
7.2	The stepped outrigger with thermoplastic stoppers	65
7.3	Jig developed to make notches in the welding rod	66
7.4	The notches in the welding rod made by the jig	66
8.1	The copper-coated welding rod outriggers mounted onto one splint base. One notch was dipped in Teflon paint	71
8.2	Notch dipped into Teflon paint	71

Number	Contents	Page
[illegible]	The two Spectra-Medic outriggers, one of which was dipped in Teflon paint	72
[illegible]	Determining the starting length of a free-hanging spring	74
[illegible]	200g attached to one of the fishing line loops	75
[illegible]	Motion type I: the weight is allowed to be pulled down by the force of gravity	75
[illegible]	Using the vernier caliper to measure the elongation of the weighted springs	76
[illegible]	The final design for the dorsal dynamic finger extension splint	86

LIST OF GRAPHS

Graph	Contents	Page
1	Stress vs. strain curve	57
2	Load vs. extension curve	58
3	Load vs. extension curve showing the required lengthening of a rubber band	59
4	Force-elongation curve for tension springs	62
5	Force-elongation curve for the tension springs	87

CHAPTER I

INTRODUCTION TO THE STUDY

A dorsal dynamic finger extension splint is a splint which is primarily designed to improve joint mobility of fingers which have become stiff after trauma. This stiffness is usually due to a combination of oedema, scar formation and muscle shortening.

The process which causes stiffness is described by Strickland (1987), as follows: oedema is the first and most noticeable reaction of the hand to injury. If the oedema is not treated effectively, collagen is laid down around the collateral ligaments of the interphalangial joints and around the flexor and extensor tendons. These in turn become attached to the surrounding immobile structures and this results in the restriction of active and passive movement. Later, the fluid is replaced with scar tissue which makes the condition worse. Scar tissue may be formed in any area of the hand, especially at the site of the injury. The scar tissue causes the tendons to adhere to surrounding structures which may lead to permanent stiffness.

However, immature scar tissue can still be favourably altered by the careful application of an external force. A dorsal dynamic splint is used to supply this force.

According to Brand (1984), stiffness of the joints of the hand is also caused by muscle shortening. This occurs as follows: if the tension of a muscle is completely removed for a period of time, (e.g. for the four to five weeks after a tendon has been repaired) the muscle remains shortened at its relaxed length. If the muscle is allowed to remain in a shortened position for four to six weeks, it may be very difficult to restore it to its former length. One method of lengthening the muscle, is to apply an external force to the hand by means of a dynamic finger extension or flexion splint. This force should be of a low amplitude and applied over a long period of time in order to prevent permanent damage to the muscle.

BACKGROUND TO THE STUDY

Many patients have been supplied with dorsal dynamic finger extension splints for improvement of the range of motion of stiff finger joints. The design of the splint has been developed and improved over time. At the beginning of this study the splint consisted of the following:

1. a custom made dorsally fitted splint base, constructed from low temperature thermoplastic splinting material. The splint base was secured to the forearm and hand by velcro straps;
2. an outrigger made from a 2,5mm copper coated welding rod. This outrigger was used as a pulley which redirected the line of the force to maintain the correct alignment of the traction units. The length, shape and height of the outrigger was adjusted to suit each individual patient. Small stoppers, made from scraps of splinting material were attached to the outrigger to prevent the fishing line, which formed part of the traction unit, from slipping off the outrigger; and
3. one or more traction units, each one comprising a rubber band, a piece of nylon fishing line and a leather finger cuff. The traction unit supplied the force which acted on the finger. See Figure 1.

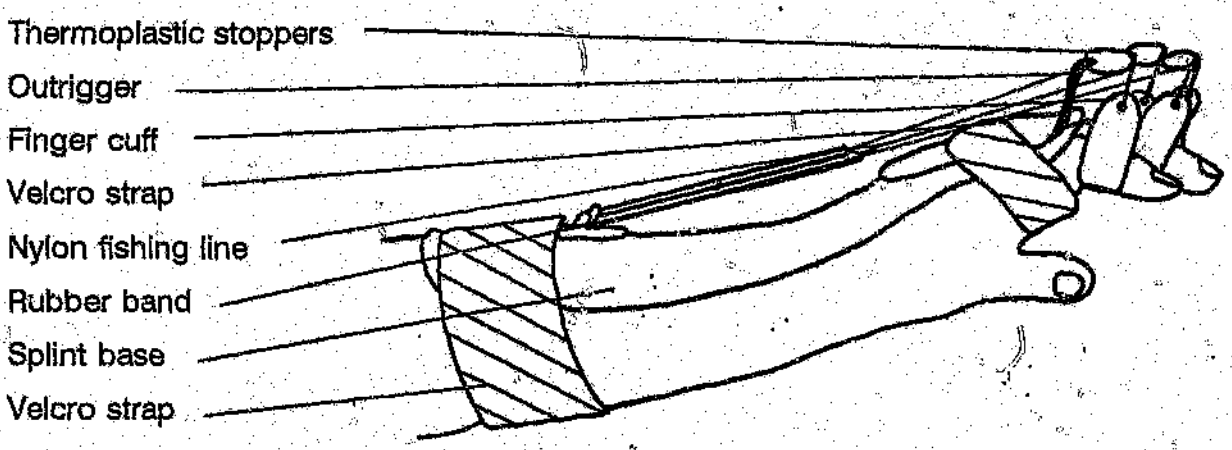

Figure 1. The dorsal dynamic finger extension splint

In keeping with therapists in other parts of the world (Fess and Philips, 1987), the researcher determined the amount of force which was applied to the fingers by feeling the tension of the traction units. A rubber band was selected from a standard batch of rubber bands, this was knotted onto the fishing line and then it was attached to the splint. The finger cuff was fitted to the patient's finger and the tension of the traction device was intuitively adjusted. Once applied, the amount of force was tested by applying pressure to the elongated rubber band to determine whether the tension "felt right". The patient's tolerance to the force was determined by ascertaining whether the splint felt comfortable or whether pain was experienced. If painful, the force was reduced, but if the patient experienced discomfort only, the force was left unchanged. A visual check was undertaken to see whether there was an excessive amount of blanching of the skin on the palmar aspect of the finger below the finger cuff and on the dorsal aspect of the proximal phalanges. Blanching of the skin is an indication that the applied force may be too great and should be reduced.

The above method of determining the magnitude of force exerted on the finger was unscientific and a matter of guesswork, based on intuition and experience. A more scientific method needed to be investigated and implemented in the clinical field.

Furthermore, occupational therapy students who do not have the clinical experience to judge whether the amount of force exerted on the finger is correct, would also benefit from a scientific means of determining the correct force. Once the amount of force necessary to influence tissue re-alignment is known and the amount of force exerted on a finger by the splint can be quantified, they will be able to apply the correct force and not have to rely on intuition.

PROBLEM STATEMENT

The amount of force required to influence growth and collagen alignment was (and still is) determined intuitively by occupational therapists. Difficulty was experienced in teaching occupational therapy students how to determine the required force

exerted on a finger by a dynamic splint. Students had no experience on which to rely, and required a method of measuring the chosen force.

The primary aims of the study were:

* to quantify the amount of force exerted on a finger, using the splint described above; and
* to develop a method which would ensure that the amount of force exerted on a finger by the traction unit of the splint was constant and reliable.

FORMAT OF THE STUDY

This dissertation endeavours to solve the problems experienced with low-profile dynamic splints and is therefore developmental in nature. No initial single protocol was set up, but different protocols were developed for each phase of the study.

Initially, the researcher planned to study the splint (described on page 2) which was in use at Ga-Rankuwa Hospital, and to make recommendations regarding the amount of force and the duration it should be applied to the finger for various conditions. However, during the first study, it was found that low profile splints displayed certain inherent qualities which prohibit the exertion of a constant and measurable force on the fingers. It was therefore important to design a splint where the force exerted on the finger was measurable and constant. Once this was achieved, the amount of force necessary to improve range of motion on a finger joint, could be studied.

The tension of a stretched rubber band on a splint was examined to determine whether the force exerted on a finger was constant and reproducible. This is described in Chapter III. Since this was extremely subjective, it was replaced by a second, more objective study. This study determined whether similar tensions in a variety of rubber bands could consistently be identified. This study is described in Chapter IV.

From this second study (Chapter IV) it was found that rubber bands more or less

equal in length, thickness and width did not undergo the same amount of elongation when identical weights were attached to them. It was therefore postulated that the friction between the fishing line and the outrigger could possibly be the cause of different elongations between similar rubber bands. The third study was designed to test this hypothesis and is described in Chapter V.

The fourth study developed from study three, after it was determined that friction played a major role in the design of the splint. The fourth study, described in Chapter VI, aims to determine whether certain materials cause less friction between the outrigger and the fishing line than others.

Chapter VII describes various solutions to the following two problems:

* problems associated with the traction force; and
* problems associated with the outrigger.

The last study, study six, was developed from the previous studies and aimed at comparing two different outrigger systems in order to design a splint which would ensure that the amount of force exerted on a finger was measurable, constant and still suitable for clinical use.

DEFINITION OF TERMS

Dorsal dynamic finger extension splint:

Is a splint made from thermoplastic splinting material, fitted to the dorsum of the hand and two thirds of the forearm with the wrist in 30 degrees dorsiflexion and the metacarpophalangeal joints in the neutral (zero) position. The aim of the splint is to extend the proximal interphalangeal joint(s) (PIP) which may have developed a post surgical contracture due to long periods of immobilisation.

Tension:

That which occurs in an elastic material such as a rubber band or a tension spring, when it is fixed at one end & a weight is hanging on its free end. A weight of 1kg

will subject a force of 1kg on the elastic band (Brand and Hollister, 1993).

Force:

That which causes acceleration. The effect of force is to cause stress in bone joints and soft tissues (Brand and Hollister, 1993).

Outrigger:

This is an extension from the main body of the splint for the purpose of positioning the traction unit. In this study it consists of a contoured piece of 2,5mm copper coated welding rod. It is rigid or near-rigid and redirects the line of force so that the correct alignment of the traction unit on the finger is maintained.

Traction unit:

This consists of a 140mm length of fishing line which has been knotted at one end to form a loop. A rubber band or a tension spring is attached to the loop at the one end and a leather finger cuff to the other end. It is used to apply a force to the finger.

Rubber bands:

These are commercially available office stationery bands made out of rubber. REPLICA RUBBER BANDS (size 32) supplied by Waltons Stationery Co. were used for the purpose of this study.

Tension springs:

These are specially manufactured springs, made from 0,06mm stainless steel wire, 5mm in diameter and 50mm long. They can replace the rubber bands applying force to the fingers.

Friction:

Friction is the restrictive force between two surfaces when one surface moves over another. Friction is lessened when the two surfaces are smooth and well lubricated.

Hysteresis:

The inability of an elastic material to return to its original shape when stress is removed (Brand and Hollister, 1993).

Creep:

Permanent deformation under constant load (Brand and Hollister 1993).

Newton:

Standard International unit of force (N)

will subject a force of 1kg on the elastic band (Brand and Hollister, 1993).

Force:

That which causes acceleration. The effect of force is to cause stress in bone joints and soft tissues (Brand and Hollister, 1993).

Outrigger:

This is an extension from the main body of the splint for the purpose of positioning the traction unit. In this study it consists of a contoured piece of 2,5mm copper coated welding rod. It is rigid or near-rigid and redirects the line of force so that the correct alignment of the traction unit on the finger is maintained.

Traction unit:

This consists of a 140mm length of fishing line which has been knotted at one end to form a loop. A rubber band or a tension spring is attached to the loop at the one end and a leather finger cuff to the other end. It is used to apply a force to the finger.

Rubber bands:

These are commercially available office stationery bands made out of rubber. REPLICA RUBBER BANDS (size 32) supplied by Waltons Stationery Co. were used for the purpose of this study.

Tension springs:

These are specially manufactured springs, made from 0,06mm stainless steel wire, 5mm in diameter and 50mm long. They can replace the rubber bands applying force to the fingers.

Friction:

Friction is the restrictive force between two surfaces when one surface moves over another. Friction is lessened when the two surfaces are smooth and well lubricated.

Hysteresis:

The inability of an elastic material to return to its original shape when stress is removed (Brand and Hollister, 1993).

Creep:

Permanent deformation under constant load (Brand and Hollister 1993).

Newton:

Standard International unit of force (N)

megapascal = 1 million N/m².

[illegible] dynamic splint:

A splint with a rubber band which is attached to a high outrigger (10-15cm in height). A finger cuff is attached to the rubber band and fitted over the finger.

[illegible] dynamic splint:

A splint with a rubber band which lies parallel to the forearm. An outrigger (2-3 cm [illegible] which redirects the line of pull is attached to the splint. A finger cuff is attached to the rubber band or fishing line and fitted over the finger.

[illegible]

In summary, this research was undertaken to standardize splinting techniques in occupational therapy so that therapists would be able to evaluate their work and their patients' recovery. This would enable them to provide an effective service and to compare their patients' progress with [illegible] worldwide.

CHAPTER II

REVIEW OF THE LITERATURE

INTRODUCTION

Splints used to correct hand deformities have been described and documented by Sterling Bunnell (Colditz, 1983), described as the father of hand surgery. He designed plaster of Paris splints with outriggers for specific problems and defined the rationale for splinting the injured hand. Since then, therapists and technicians have supplied many patients with splints, but have not always given enough thought to the amount of force exerted by the splint.

It was only in the 1980's that therapists and surgeons started to question how much stress the delicate tissues of the hand can withstand. This led to a more careful study of the various types of splints to determine the forces involved, and how splints could be more effective without damaging the soft tissue of the hand. Brand (1985), Rouzaud and Allieu (1987), Mildenberger et al. (1986), Fess and Philips (1987), and May and Silfversklold (1989), were among the first to propose methods to determine the amount of force exerted by a splint, but unfortunately these are not yet routinely applied in the clinical setting.

Literature regarding this topic is relatively recent, as very little work was done in this field prior to 1983. The literature reviewed will be discussed under the following headings:

* Rationale for splinting
* Purpose of dynamic splinting
* How much force is required
* Available sources of force
* How to determine the force exerted by the splint

* The low-profile splint
* Friction over the outrigger
* Dynamic splints described by Rouzaud and Allieu (1987), and May and Silfverskiold (1989).

RATIONALE FOR SPLINTING

Brand (1985), prefers not to use a splint on the hand, as he believes that a hand is always at its best when it is actively used in purposeful activity. He believes that a splint inhibits the ordinary free use of the hand and should only be used when activity may be harmful or alternative procedures are less successful.

He however cites two specific instances where splints are extremely useful:

* where range of motion is limited by contracted soft tissue or scar, an external force may be necessary to lengthen the contracted tissues. In this case, the patient's own muscles cannot produce or sustain the required torque for the required period of time to lengthen the tissues; and
* in some cases where an external force may be required to stabilise a proximal joint in such a position so that the patient's own muscles may be able to mobilise the distal joint better.

Brand (1985), also views tissue synthesis as an important objective of hand therapy. He is of the opinion that this can be achieved by the use of splints. The process is explained by Colditz (1983) as follows: dynamic splints provide a small amount of force over a prolonged period to influence the synthesis of new tissue, rather than apply a rapid jerking force to the soft tissues thus allowing them to immediately return to their original length. By wearing a dynamic splint, the tissues are kept in a constant state of mild tension causing cells to multiply and proliferate in response to the stress created by the splint. Colditz goes on to say that splints should be well designed and specifically applied because forces may cause modification of tissue synthesis. If incorrectly applied, they can do more harm than good.

In essence, Strickland (1987), agrees with Brand and Colditz, but describes the rationale for splinting slightly differently. He is of the opinion that splints can be used to:

* allow healing;
* modify contracted and scarred skin, subcutaneous tissue, fascia or ligamentous tissues; and
* lengthen tendon adhesions that have become fixed to bone or surrounding tissues.

In order to design, construct and apply an effective splint, the therapist should understand the necessary sequence of biologic events involved in normal tissue healing and the deviations in this sequence which may result in loss of range of motion. Splints can be used to alter and control these biological events so that maximum function is restored.

Although it is accepted that splints can be used most effectively to control the healing process of tissue, it is often difficult to know which type of splint should be applied at which point during the healing process. Strickland (1987), describes four phases of tissue healing: inflammation; fibroplasia; scar maturation and wound contracture, and gives clear guidelines as to which type of splint is appropriate for each phase.

The phases of healing and appropriate splint for each phase according to Strickland (Fess & Philips, 1987), are briefly described below.

Inflammation

The initial biological response following trauma is inflammation and is usually present for several (four to seven) days. Mobilising splints which apply stress to the healing wound may cause rupture of repaired structures or a prolongation of the inflammatory phase due to repeated injury to the tissue. It is therefore appropriate to immobilise the hand during this phase of healing.

Fibroplasia

This phase usually begins at the wound site on the fourth or fifth day post injury and continues for two to six weeks. During this phase the tensile strength of the tissue increases rapidly and it may be biologically correct to apply a mobilisation splint to provide light stress to the hand. However, this should only be undertaken if there are no healing tissues (e.g. nerve repairs, fractures or tendon repairs) that might be compromised by the application of stress. Careful observation of the hand (oedema, colour changes and changes in joint mobility) will indicate whether the stress is being applied correctly or not.

Scar maturation

After the sixth week of wound healing, changes in the form, bulk and strength of the scar occur. This remodelling of collagen is a spontaneous process and may continue for many years. It is during this phase that there is a continuous and simultaneous production and breakdown of collagen. In this phase it is appropriate to increase the amount and duration of the force applied to the hand. Joint stiffness and loss of tendon gliding which may have developed during the first two phases, may be due to immature scar tissue. This tissue can still be altered favourably by the appropriate use of stress. Mobilisation splints which are used in this phase of healing, are designed to influence the remodelling of collagen and ensure the maximum recovery of articular gliding and tendon excursion.

Wound contracture

The process of wound contraction begins after three days post injury (latent period) and will continue to close the wound until balanced by equal tension in the surrounding skin. Generally contraction is beneficial in healing wounds, but in the hand it may be detrimental to function, especially when mobile tissues around the joints are involved. The use of splints which resist the contractile influence of wound healing may favourably influence the process of wound contracture and therefore maximise function.

Strickland further states that splints may be used to assist the conversion of scar from an unfavourable to a favourable state, by controlling the biological process of synthesis and degradation of collagen. These splints should be designed in such a manner as to maximise stress to the scar, whilst minimising damage to normal hand tissue. The amount and direction of force applied to the hand must be carefully monitored to prevent damage to skin and subcutaneous tissue and to avoid unnecessary compression or distraction of the joints involved. Force should not be applied too rapidly as the ligaments may not be able to undergo the desired biological alteration and may rupture. It is for this reason that therapists must be able to answer the following questions before applying a splint to a patient's hand:

* what is the most desirable vector in the application of force to a given joint;
* how much force should be imparted;
* for how long a period should this force be applied;
* through how wide a surface;
* to what anatomical structures is the force being applied; and
* what assessments will ensure the splint is being effective. (For example, repeated range of motion measurements will indicate whether the splint is performing the required function).

Strickland (Fess & Philips, 1987), sums up the state of the application of splints as follows:

> "*Unfortunately, the application of splints often involves little more than trial and error, rather than a scientific process involving the direct application of methods for the careful measurement of force being applied by a particular splint and concerns for the mechanical aspects of force application*". (Fess & Philips, 1987, p 59)

PURPOSE OF DYNAMIC SPLINTING

According to Fess (1984), splints are used to correct existing deformities through the application of gentle force that gradually causes collagen realignment and tissue

growth. At the same time an increase in passive range of motion occurs at the joint. Splints are also used to substitute for lost active motion, whereby the functional use of the hand is improved. (The functional splint does not form part of this study and will not be discussed further).

Brand (1984), describes a dynamic splint as one which achieves its effect by movement and force. It is a form of manipulation which utilizes externally imposed forces.

The purpose of dynamic splinting is to provide a limited amount of force over a prolonged period to influence the synthesis of new tissue (Colditz, 1983). The goal is to keep the tissues in a constant state of mild tension so that cells multiply and proliferate in response to the need created by the force applied by the splint.

HOW MUCH FORCE IS NECESSARY

The application of force to the injured hand influences the remodelling of collagen and ensures maximum recovery of articular gliding and tendon excursion, or together with the alteration of scar from an unfavourable to a favourable state (Strickland, 1987). The question to ask is: how much force is necessary? This is a question which many therapists and students have asked over the last number of years.

Based on experience, Malick (1978), recommended a force of 0,5 pounds (eight ounces) when applying a dynamic splint. This is two ounces more than the amount of force recommended by Weeks (1973). Weeks states that the average hand can tolerate six ounces of force for up to four hours. However if the force is less than six ounces, it can be tolerated for longer periods. Weeks emphasises that excessive force causes ischemia and pain. Therefore, pain serves as an effective indicator that the amount of force used is too high.

It was only in the 1980's however, that therapists became more scientific in determining how much force should be applied to a finger or hand.

Fess & Philips (1987), described an experiment they conducted in 1984 in which they assessed the abilities of 47 therapists to select rubber band tensions (the tension felt in a rubber band is equal to the force which is applied to a finger). Using a standard set of instructions, subjects were asked to select two rubber bands from two tension adjustment frames, which would be appropriate for two patients described in two case histories. This enabled the researchers to ascertain how reliable the therapist's skills were to select rubber bands with the same tension from two different frames. Results indicated that therapists were able to identify the correct rubber band tension, and then replicate that tension in a second set of rubber bands. Experienced hand therapists altered their rubber band tensions according to diagnosis. The overall magnitude of force used ranged from 164 to 294g. They stated that a general concept of the "safe boundaries" of the magnitude of force required to influence tissue growth and collagen alignment were beginning to develop among hand therapists. However, further research was necessary to lay down a standard set of rules.

Dr P W Brand has undertaken extensive research on tissue regeneration. In order to quantify the forces exerted on a hand or finger he states that, as new collagen is laid down in new patterns responsive to a need, the tissue should be kept in a constant state which demonstrates this shortage of tissue length (Brand, 1984). The cells will sense the shortage and will make changes to meet this need. The best way to keep the tissue constantly in a state of mild tension, is to apply a splint (therefore force) to the hand. He stated:

> *"The optimum state requires less tension than most of us use, but it needs to be maintained for longer than most of us do"*. (Brand (1984), in: Hunter et al." p 849)

However, a year later Dr Brand was more specific and recommended splinting forces ranging between 100 and 300g (Brand, 1985), to keep the tissues in a state of mild tension.

AVAILABLE SOURCES OF FORCE

The most commonly used sources of force on a dynamic splint are rubber bands, springs or elastic threads (Breger-Lee & Buford, 1991).

The properties of rubber bands were studied extensively by Breger-Lee and Buford (1991), who concluded that rubber bands exhibit visco-elastic properties which may change rapidly, together with variability and lack of durability. Hysteresis (the inability of an elastic material to return to its original length after tension has been removed) is present in all rubber bands. This affects the force provided by the rubber band when stretched. Therefore, they can not provide a controlled repeatable force. Rubber bands also suffer from creep (permanent deformation under constant load) which decreases their reliability over a period of time.
According to Breger-Lee and Buford (1991), springs are more durable, have an excellent shelf life and provide a consistent and controlled force.
Elastic threads were also studied by Breger-Lee and Buford (1991), who found that they exhibited less creep than rubber bands although hysteresis was present to a similar degree to that of rubber bands.

Breger-Lee & Buford (1991), recommend tension springs for use in dynamic splinting.

HOW TO DETERMINE THE AMOUNT OF FORCE EXERTED BY A SPLINT

Strickland (1987), recommended the use of a simple spring-loaded scale to measure the force generated by a rubber band and sling combination attached to an outrigger splint. It is important that the scale measures the force of the rubber band at exactly

the same tension as will be used in a splint. This method works best when a high profile splint is used.

Fess & Philips (1987), described the following method to determine the amount of force exerted on a finger: an appropriate size standard brass weight was attached to the untrimmed end of the fishing line and was suspended from the outrigger at a 90 degree angle. The finger was then pulled gently into maximum extension and a mark placed on the fishing line at the point where the cuff was to be attached. The weight was removed and the cuff attached at the point marked on the fishing line. This ensured that the amount of force exerted on the finger was the same as that of the brass weight.

Mildenberger et al. (1986), and Brand (1985), advocated the use of force/elongation graphs when constructing a splint. This graph is prepared by a therapist or technician for a batch of rubber bands used in a clinical setting. It was prepared as follows: weights ranging from 100g to 500g were hooked onto the rubber bands one at a time and the length of the elongation measured for each weight. If a dynamic splint required a certain amount of force, e.g. 200g, the therapist also measured the distance on the splint which was available for elongation. Say the distance was 5cm, the graph enabled the therapist to choose a rubber band which was 5cm long when a force of 200g was applied to it.

However, Brand (1984), also recommended that the tension should still be checked with a spring scale after application to the hand.

Other authors, such as Gyoval and Wright Howell (1992), also proposed a method for determining the amount of force exerted on the finger by a splint. Having concluded that friction between the dynamic components and an outrigger or pulley influences the amount of force applied to the finger, they described a method of measuring the force supplied by a dynamic component taking friction and other variables into account. They determined that a 60 degree angle of pull using a

Haldex gauge was required to account for the effect of friction when using brazing rod outriggers. They described a modified Haldex gauge which is used to measure the applied forces of a splint. The gauge was modified by attaching a guide pin at a 60 degree angle to the pinch frame which covers the gauge. The guide pin ensures that the lever arm of the Haldex gauge is always attached to the dynamic component of a splint at a 60 degree angle (see Figure 2). When the gauge is moved proximally, the spring (part of the dynamic component) is put under tension. Once the desired force is achieved, the gauge is removed and the dynamic component attached to the splint base with the spring at the determined length.

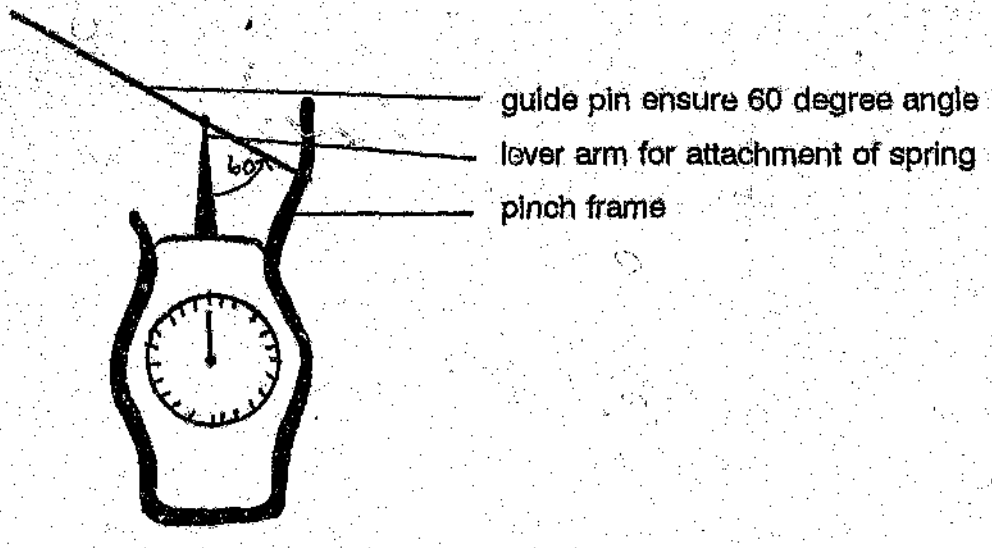

Figure 2. The modified Haldex gauge

THE LOW-PROFILE DYNAMIC SPLINT

This is a splint where the rubber band or spring lies parallel to the forearm along the base of the splint. An outrigger to redirect the line of pull is attached to the splint. Many of Bunnell's splints, which he designed during World War II, were of the low-profile type, in keeping with his philosophy that splints should be easily adjustable and not too bulky. (Colditz, 1983).

In later years splints were usually made by orthopaedic technicians. These splints were often fairly large and bulky because they made use of piano wire to achieve movement of the fingers.

With the advent of low temperature thermoplastic materials, occupational therapists became more and more involved in the manufacture of splints. Since it was easier for them to obtain the correct angle of pull using a high outrigger, most designs for dynamic splints were of the high outrigger type (Malick, 1978). Most dynamic splints made during the 1970's had a high profile. (Colditz, 1983).

During the early 1980's, therapists tended to return to the use of low-profile dynamic splints. According to Colditz (1983), one of the reasons for the change in splint design was that the low-profile splint was less bulky and more streamlined. It was also mechanically sound and cosmetically more acceptable to the patient.

Brand (1985), stresses the mechanical advantage of the low-profile splint, which ensures that there is sufficient room for a long spring or long rubber band. Length is important, because a rubber band requires sufficient resting length to permit effective action at both ends of its required range. Using a low-profile splint, it is possible to select a rubber band or spring which is long enough to allow constant tension through a long excursion. When a high-profile splint is used, very often the outrigger is not sufficiently high enough to allow for rubber band excursion. Since rubber bands need to be very short to fit the splint, these splints are often only effective when first fitted. A small improvement in joint range makes the splints useless, because the rubber band is ineffectual over a short distance.

According to Colditz (1983), one of the advantages of the low profile splint is the ease with which the finger loop can be correctly placed on the finger, ensuring a 90 degree angle of pull. At the same time, however, one of the disadvantages of the low profile splint is the rapid loss of the correct angle of pull compared with that of a high profile splint. If a joint's mobility increases by 10 degrees, an outrigger 30mm away

from the finger will need to be adjusted sooner than an outrigger 150mm away from the finger in order to maintain a 90 degree angle of pull. Low profile splints need frequent adjustment, requiring regular visits to the therapist. Where this is problematic a splint with a high outrigger may be more effective.

FRICTION OVER THE OUTRIGGER

The use of a low-profile dynamic splint, where the outrigger acts as a pulley to redirect the line of force, brings additional problems in the form of friction between the traction unit and the outrigger. A literature review revealed that very little reference is made to this problem. Foss & Philips (1987), state that friction may occur between the surfaces of the traction device and the outrigger which could undermine the strength of the traction device. They suggest two methods of reducing friction: the use of nylon line or unwaxed dental floss, or the use of pulleys over the outrigger.

These two methods were also briefly described by Colditz (1983), and Brand (1987), in their descriptions of a low-profile dynamic splint.

Colditz (1983), preferred FF monocord string for use as part of the traction device, as it is strong, non-stretchable and not susceptible to fraying. She mentioned that it slides across the outrigger easily, but the possible occurrence of friction between the monocord and the outrigger was not discussed.

Brand (1987), advocated the use of a nylon pulley over the outrigger together with a monofilament nylon thread to act as a tendon. However, the possibility of friction between the outrigger and the nylon thread which could decrease the actual force exerted over the finger was not discussed.

The issue of friction between the outrigger and the fishing line of a low profile dynamic splint was only mentioned in the literature in the 1980's. However the

problem received more attention in literature published in the 1990's (eg. Bell-Krotoski et al. (1990), and Gyovai and Wright Howell (1992)).

Bell-Krotoski et al. (1990), state that external drag (friction) is present when the nylon thread moves around an outrigger. The friction can cause a nylon thread to move like a ratchet with slips and starts. This results in additional unwanted force over the finger. Specifically the use of an outrigger made of thermoplastic material was condemned whilst the use of a free and frictionless bar or a wheel pulley available in prefabricated splint packages was suggested.

To validate spring forces applied in dynamic outrigger splinting, Gyovai and Wright Howell (1992), found that whenever an outrigger or pulley was added to a simulated splint, additional force had to be applied and a longer spring length was required. It is believed that friction between the dynamic component (traction device) and the outrigger was the major factor responsible for reducing the force produced by the springs. For this reason it is suggested that therapists should not use premeasured springs on splints without measuring the amount of force exerted on the finger in situ (on the patient's hand in a clinical department), as the manufacturers of the springs do not take into consideration the effect of friction between the outrigger and fishing line when the springs are pre-measured.

As sufficient proof of friction between the dynamic unit and the outrigger influencing the amount of force exerted on a finger was found, a method of measuring the amount of force using a modified Haldex gauge was suggested by Gyovai and Wright Howell (1992). This takes into account factors such as friction, length and contour of the splint, angle of the outrigger, size and direction of pull of the finger sling and the patient's method of application of the sling.

It is surprising that the possible occurrence of friction between the outrigger and the traction unit received little mention in the literature, as one of the major findings of this study was that friction between the fishing line and the outrigger plays a major role

in decreasing the force exerted on a finger by a low profile dynamic finger extension splint. Furthermore, this study has investigated methods of decreasing this friction using materials which are economical and easily obtainable.

DYNAMIC SPLINTS DESCRIBED BY DIFFERENT AUTHORS

Rouzaud and Allieu (1987)

Rouzaud and Allieu (1987), described a custom made splint manufactured from thermoplastic material, using a calibrated spiral spring instead of a rubber band to supply the force. A selection of colour coded springs ranging from 50 to 2000g was developed. When a spring is stretched by 50mm, a certain magnitude of force is exerted on a finger. As each colour represents a different force magnitude, the therapist can select the most appropriate spring for the patient.

These springs tested by Roberson et al. (1988), were reported as providing a consistent and controlled force, and were durable and gradable.

The gauged springs are part of a universal system consisting of adjustable parts, available in kit form. This kit enables a therapist to construct a splint consisting of a splint base, a traction unit (made up of a spring and traction wire) and a pulley over which the traction wire will run. The splint is of the low-profile type and is easily adaptable and cosmetically acceptable. However, one of the greatest drawbacks is the high cost of the components.

May and Silfverskiold (1989)

May and Silfverskiold (1989), described a new power source in dynamic splinting, namely a watch spring with a torsional (wound up) design. Their splint consisted of a splint base made from thermoplastic material and a spring which powered a spool on to which a nylon line was wound. The unit was built into a brass housing unit which clipped on to the end of an outrigger. A cuff was attached at the end of the nylon cord and fitted on to the finger. The torsional design did away with the need

for a long rubber band or a high outrigger, as the force of the spring was coiled around the spool. Therefore, there was no need for the outrigger to be very high (approximately 3cm) and pulleys were unnecessary. This facilitated and simplified quantification and standardisation of the forces.

The above splint design has definite merit, however it is not available in countries outside Sweden.

CONCLUSION

The use of dynamic splints in the treatment of many hand conditions is widely recommended. One only needs to refer to the definitive work "Rehabilitation of the Hand" (eds: Hunter et al. 1984), in which hundreds of conditions are discussed, to obtain an idea of the extensive use of dynamic splinting (i.e. the application of forces to the hand). Unfortunately, not enough has been written about the consequences of incorrectly applied forces. Therapists must be made aware of these and learn to question what they are doing. In a chapter by Dr P W Brand: "*The forces of dynamic splinting: ten questions before applying a dynamic splint to the hand*", (Hunter et al, 1984), therapists and surgeons are cautioned to consider the effect of the application of a splint carefully. In some instances a splint may do more harm than good. The literature describes a number of dynamic splints, but most are too expensive. Therefore, most clinicians still rely on rubber bands to provide the force required in a dynamic splint, even though they have proved to be inconsistent and unreliable.

A number of authors, concerned that therapists do not measure the forces they apply to the hand when constructing a dynamic splint have proposed different ways of determining how much force is necessary to influence collagen remodelling. Furthermore, methods have been proposed to measure the force applied by the splint, but they do not appear to be widely used in the clinical field (Brand, 1985; Fess and Philips, 1987).

CHAPTER III

STUDY 1

INTRODUCTION

The first study was to determine whether the therapist's intuitive feeling of the tension of a stretched rubber band of a low profile dorsal dynamic finger extension splint was constant and reproducible.

AIMS

1. To determine the weight that causes the tension in a stretched rubber band to "feel right" (i.e. have the correct tension).
2. To measure the length of the stretched rubber band.

NULL HYPOTHESIS

The amount of force needed to provide the tension which "feels right", on the traction unit of the splint cannot be identified.

MATERIALS

1. A dorsal dynamic PIP extension splint consisting of the following:
   - 1.1 a dorsal splint base, made from a thermoplastic material extending from two thirds of the forearm to just proximal to the PIP joints of the fingers. The wrist was immobilised in 30 degrees dorsiflexion;
   - 1.2 a contoured outrigger made from a 2.5mm copper coated welding rod (available from Afrox) with thermoplastic stoppers; and
   - 1.3 a traction unit made from a rubber band (Replica rubber bands, size 32, supplied by Waltons Stationery Co (Pty) Ltd), a 300mm piece of nylon fishing line, with a breaking strength of 3,6 kilograms, knotted to

form a loop 140mm in length and a leather finger cuff. (See Figure 3).

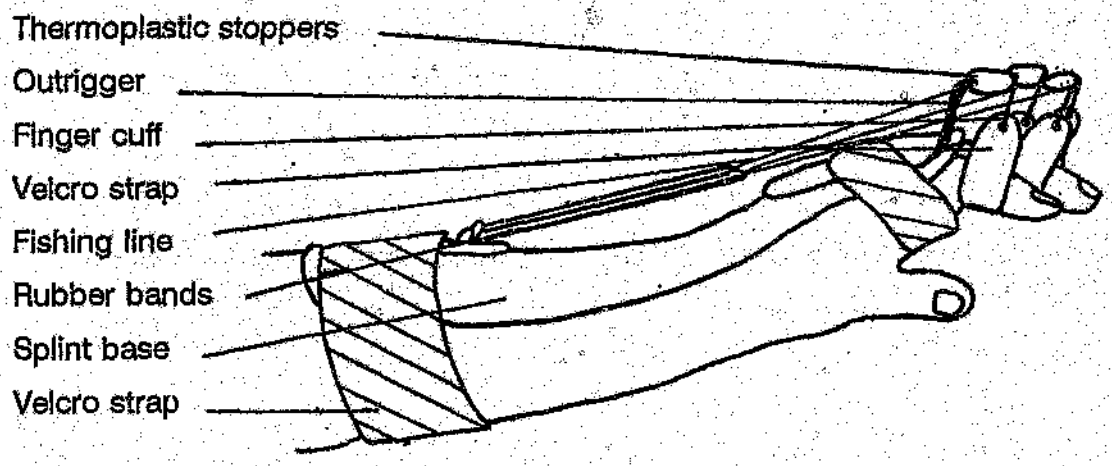

Figure 3. The dorsal dynamic finger extension splint

2. A laboratory stand with an adjustable chuck clamp.
3. Laboratory weights ranging from 100g to 500g with hooks to attach them to the finger cuff.

MEASURING DEVICE

1. The fingers of the researcher were used to measure the tension of the rubber bands.
2. A standard plastic ruler calibrated in millimetres was used to measure the length of the stretched rubber bands.

METHOD

The splint was clamped horizontally to the laboratory stand. A rubber band randomly selected from a box of bands in use in the clinical department, was attached to the splint. A succession of five weights, ranging from 100g to 500g were hooked onto the finger cuff by the researcher in such a way that the fishing line passed over the outrigger and the rubber band was stretched. The tension of the rubber band was felt by the researcher and when it "felt right" the weight producing the correct tension

was recorded and the length (in mm) of the stretched rubber band was measured and recorded. This was repeated ten times on each rubber band, using each weight twice (100g, 200g, 300g, 400g and 500g).

RESULTS

The results can be seen in Table 1. When the tension felt right, a mark (x) was made under the column "felt right" and the length of the stretched rubber band was measured and recorded.

TABLE 1

RUBBER BAND LENGTH (in mm) WHEN THE TENSION FELT RIGHT					
1st Measurement					
Rubber band 1			**Rubber band 2**		
Weight	Felt right	Length	Weight	Felt right	Length
100g			100g		
200g			200g		
300g	x	180mm	300g	x	175mm
400g			400g		
500g			500g		
2nd Measurement					
100g			100g		
200g			200g		
300g	x	168mm	300g	x	190mm
400g			400g		
500g			500g		

DISCUSSION

The above table shows the results for two rubber bands only, as it soon became apparent that there was a marked researcher bias during this first study. The

researcher had been influenced by Brand (1985), who recommended that splinting forces should range between 200g and 300g. As the weights were hung onto the traction unit and the tension judged while the weight was visible, it was impossible to be objective, the conclusion being that the tension only "felt right" when a weight of 300g was used. Therefore, since the first study was not objective, it was replaced by a second study which attempted to be less subjective.

CHAPTER IV

STUDY 2A AND 2B

STUDY 2A

INTRODUCTION

Since study one was not objective it was replaced by a second study which attempted to be less subjective.

AIM

To determine whether the researcher could consistently identify the same tension in a variety of rubber bands which had various weights attached to them. (A research assistant was used to eliminate subjectivity).

MATERIALS

1. A wooden box, measuring 300mm x 300mm x 1300mm with two short, square sides and three long, rectangular sides (see Figure 4.1).

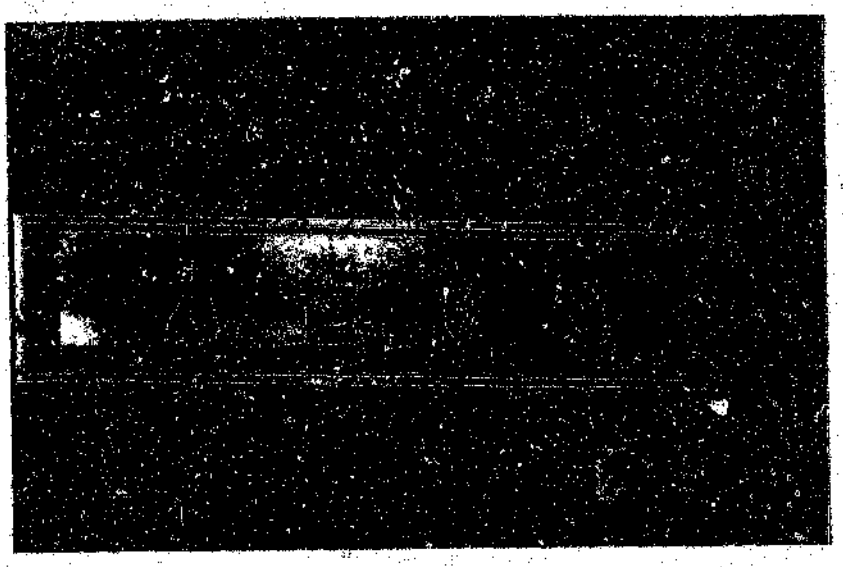

Figure 4.1. The wooden box used in study 2A

Five holes, 12mm in diameter, were drilled 250mm apart in one of the rectangular sides of the box. This was done in such a manner that the open side of the box was adjacent to the side with the holes (see Figure 4.1). Five outriggers made from 2.5mm copper coated welding rods and contoured in the same manner as the outriggers used on dorsal dynamic splints, were attached to the side with the holes in such a way that the outriggers were directly above each hole. Small thermoplastic stoppers were also attached to the outriggers to maintain the correct alignment of the traction units. (See Figure 4.2).

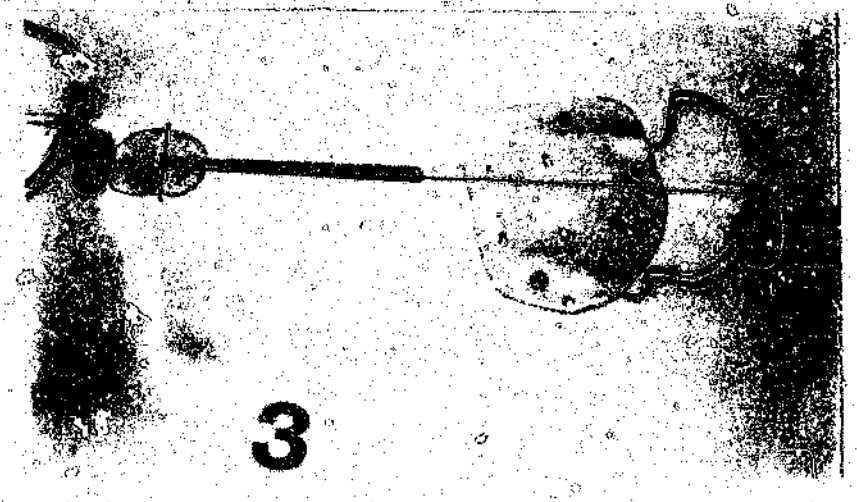

Figure 4.2. Outrigger and traction unit from above

2. Five traction units, each consisting of a rubber band (Replica, size 32) and a 300mm piece of fishing line, with a breakage strength of 3,6kg, knotted to form a 140mm loop, were attached to the box, 25cm from each hole (see Figure 4.3).

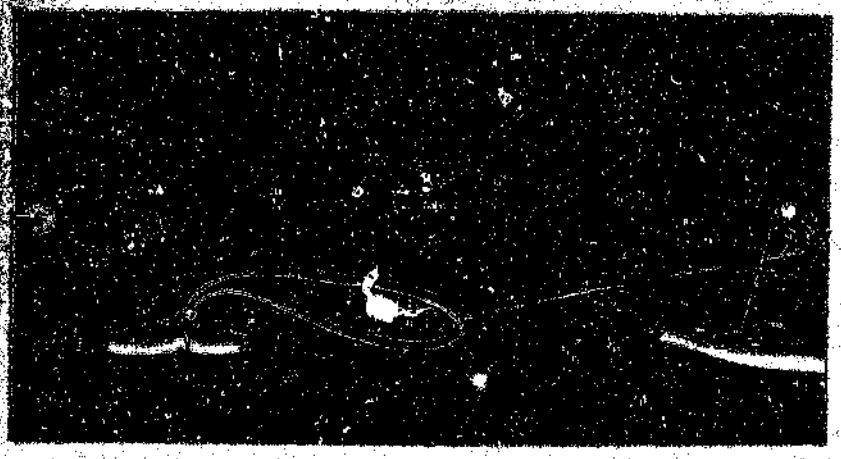

Figure 4.3. Attachment of rubber band to the box

Six sandbags of different weights (2 x 100g; 2 x 200g; and 2 x 300g) were prepared and a fishing clip attached to each sandbag. Since Brand (1987), only recommended the use of forces below 300g (forces higher than 300g can cause permanent damage to skin and other structures), it was decided to omit the 400g and 500g weights.

MEASURING DEVICE

As described in Chapter III.

METHOD

The box with the five simulated dynamic splints was placed on a table in such a way that the researcher was unable to see the open side.

The traction units were threaded through the holes so that the fishing line loops passed over the outriggers.

An assistant randomly attached different sandbags to each fishing line loop without the researcher seeing which weight was attached to which unit (see Figure 4.4).

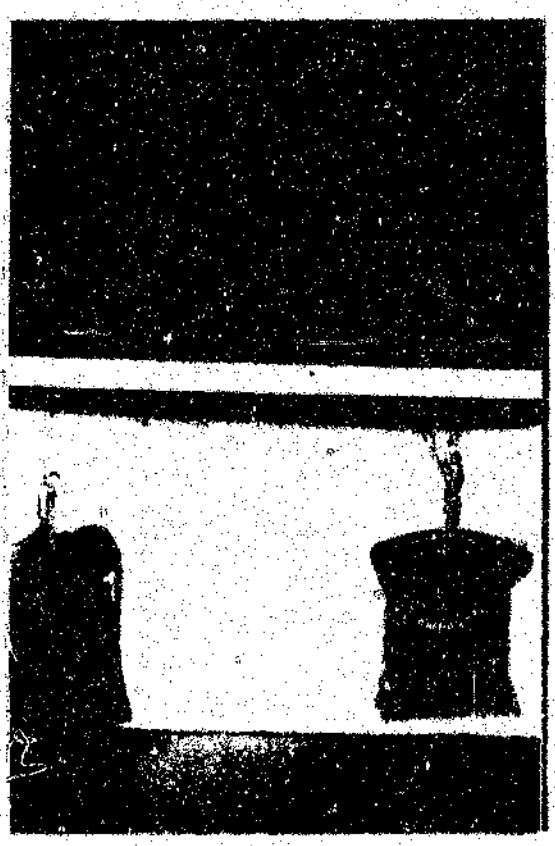

Figure 4.4. Sandbags attached to traction units

The degree of tension of each traction unit depended on the weight of the sandbag. The researcher then felt each traction unit and tried to determine which "felt right" (see Figure 4.5).

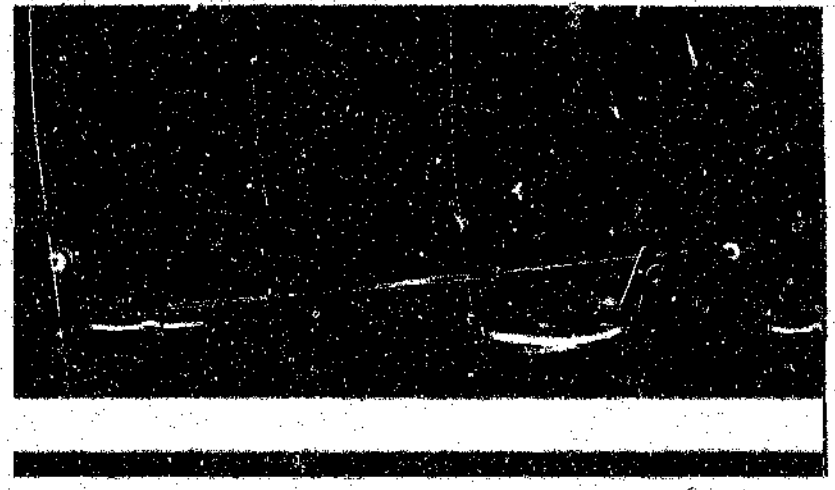

Figure 4.5. The researcher feeling the amount of tension

An attempt was made to determine (by guessing) which rubber bands were equal in tension as the assistant always ensured that there were at least two sandbags of identical weight attached to the five fishing lines. The assistant recorded the weight for each traction unit. A response was correct when the researcher correctly identified the weight of the sand bag on the traction unit. Few correct responses for each traction unit were recorded. Even with the naked eye it was apparent that rubber band tension on the different traction units were very different, although the same weight was attached to them. This was possibly due to the difference in length, thickness and width of the different rubber bands, which, although from the same batch, did not have uniform properties. Therefore, the rubber bands were replaced with ones which were considered to be more equal in length, thickness and width (from the same batch) and the experiment was repeated.

RESULTS

It was still impossible to consistently identify the traction units which had equal weights attached to them, in spite of the rubber bands being more equal in length, thickness and width. The results of this study can be seen in Table 2. In every trial the weight which was guessed correctly was marked with a cross.

TABLE 2

NUMBER OF CORRECT GUESSES OF TENSION FOR EACH TRIAL IN STUDY 2A

Trial	Traction Unit	1	2	3	4	5	Total correct	% correct
1	Weight in g	100	300	200	100	300		
	Correct		x				1	20
2	Weight in g	200	300	300	100	200		
	Correct			x			1	20
3	Weight in g	200	200	200	300	100		
	Correct						0	0
4	Weight in g	300	300	300	300	300		
	Correct				x		1	20
5	Weight in g	100	300	100	200	200		
	Correct		x				1	20
6	Weight in g	200	200	200	200	200		
	Correct						0	0
7	Weight in g	100	300	200	200	300		
	Correct			x			1	20
8	Weight in g	300	200	100	100	300		
	Correct						0	0
9	Weight in g	200	200	300	300	100		
	Correct		x	x			2	40
10	Weight in g	300	300	100	200	100		
	Correct		x				1	20
Total correct (out of 20)							8	40

SUMMARY OF RESULTS

300 g was correctly identified in 6 out of a possible 19 instances (31,5%), 200g weights correctly identified in 2 out of a possible 18 instances (11%), 100g weights were never correctly identified.

DISCUSSION

Due to the opinion of Brand (1987), who recommends splinting forces of between 100g and 300g, the 400g and 500g forces used in the first study, were omitted. In this study only weights of 100g 200g and 300g only, were used. As there were five traction units, more than one identical weight was used in each trial. Therefore, it was also possible to determine whether the researcher was able to correctly guess when two traction units had the same amount of tension (and therefore equal weights).

As can be seen from Table 2, the number of correct guesses in each trial was limited. In all but one trial, only 20% (1/5) was guessed correctly. It is important to note that one 300g weight was nearly always correctly identified in each trial, but it is apparent that the researcher could not identify traction units with identical weights attached in the same trial. In other words, when there was more than one traction unit with 300g, only one traction unit was consistently correctly identified.

Since the same tension on equal traction units could not be identified, the aim of the study was not being met. This had an important practical implication, since it meant that it could never be ascertained that the correct amount of tension was applied to a finger when a dynamic splint was fitted.

STUDY 2B

The method used in Study 2A was changed in that five equal weights (sandbags) of 300g were hung onto the five different traction units. The amount of rubber band elongation was measured instead of the amount of tension.

AIM

The aim of this study was to determine whether there was a difference in length of stretched rubber bands with equal weights of 300g attached to them.

METHOD

The assistant hung equal sandbags, all weighing 300g, onto each traction unit. The researcher tried to determine whether the tension of all five of the rubber bands felt the same. With equal weights, using rubber bands which were apparently similar, the five different traction units did not undergo the same amount of stretching. It was decided to measure the amount of elongation which each traction unit underwent when a weight of 300g was attached to it and compare these lengths.

The following procedure was followed:

1. five rubber bands, similar in length, thickness and width were attached to the fishing line loops as described in Study 2A, page 29; and
2. a 300g weight was hung onto each traction unit and allowed to elongate for 30 seconds. The length of each stretched rubber band was measured in mm, using a standard ruler, between the place where it was attached to the splint and the fishing line loop (see Figure 4.6);
3. this was repeated ten times for each rubber band.

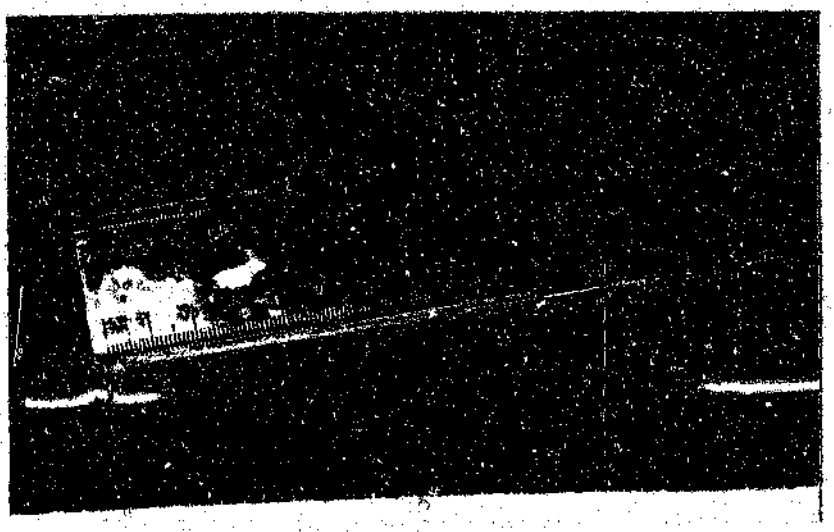

Figure 4.6. Measurement of stretched rubber band

RESULTS

The mean length and standard deviation of the different rubber bands was calculated for each traction unit.

The results are seen in Table 3.

TABLE 3

MEAN LENGTH(mm) OF STRETCHED RUBBER BANDS WITH 300g ON EACH

Rubber band	1	2	3	4	5
Mean length(mm)	10,84	12,11	9,99	11,25	9,87
SD	0,66	0,62	0,79	1,01	2,87
Range	9.97-11.30	11.40-13.80	8.76-11.11	9.90-13.41	6.40-12.65

$\bar{X}$ = 10,81mm
SD = 1,11
Range = 8.40 - 13.80

DISCUSSION

The statistician reported that the standard deviations for the first four rubber bands were within acceptable limits. The fifth rubber band had a standard deviation of 2,87 which is an indication of the variety of measurements obtained with the same weight. When the average of the five mean lengths was calculated, it was found to be 10,81mm with a standard deviation of 1,11. This meant that the length of the five stretched rubber bands differed even though equal weights were attached to them.

However, it was felt that there were still factors that had not been sufficiently controlled, which could have influenced the above study, such as whether the rubber bands were really equal in length, thickness and width, or whether all five rubber bands had the same initial starting length. If these were not equal, they could not be compared to each other.

From Study 2B it was found that rubber bands which were more or less equal in length, thickness and width, did not undergo the same amount of stretching when identical weights were attached to them. This could have been due to the fact that the rubber bands were not equal in all respects or due to other factors. It was postulated that friction between the fishing line and the outrigger could be another interfering factor. Study 3 was designed to test this hypothesis, taking care to use rubber bands which were equal in length, thickness and width and which had the same starting length.

CHAPTER V

STUDY 3

INTRODUCTION

Since friction over the putrigger appeared to be a major contributing factor to the unequal stretching of the rubber bands when equal weights were attached to them, Study 3 was designed to determine whether this was true or not.

AIMS

To determine:

1. whether there is friction between the fishing line and the outrigger; and
2. whether friction changes the amount of force exerted on the finger.

NULL HYPOTHESIS

There is no friction between the fishing line and the outrigger of the splint.

MATERIALS

1. Three dorsal dynamic PIP extension splints, as described in Chapter III (page 23).
2. Three laboratory stands, as described in Chapter III (page 24).
3. Three 300g laboratory weights.
4. Three 300mm lengths of nylon fishing line, knotted to form three 140mm loops.
5. Thirty Replica rubber bands, size 32.

To obtain rubber bands which closely resembled each other with regards to their elasticity, 30 rubber bands were selected in ten sets of three in the following manner: Three rubber bands were selected from a batch and hung on a horizontal rod, (part of the laboratory stand). Standard laboratory weights of 300g were hung onto each band. The bands were allowed to stretch for 30 seconds and were then measured (Figure 5.1).

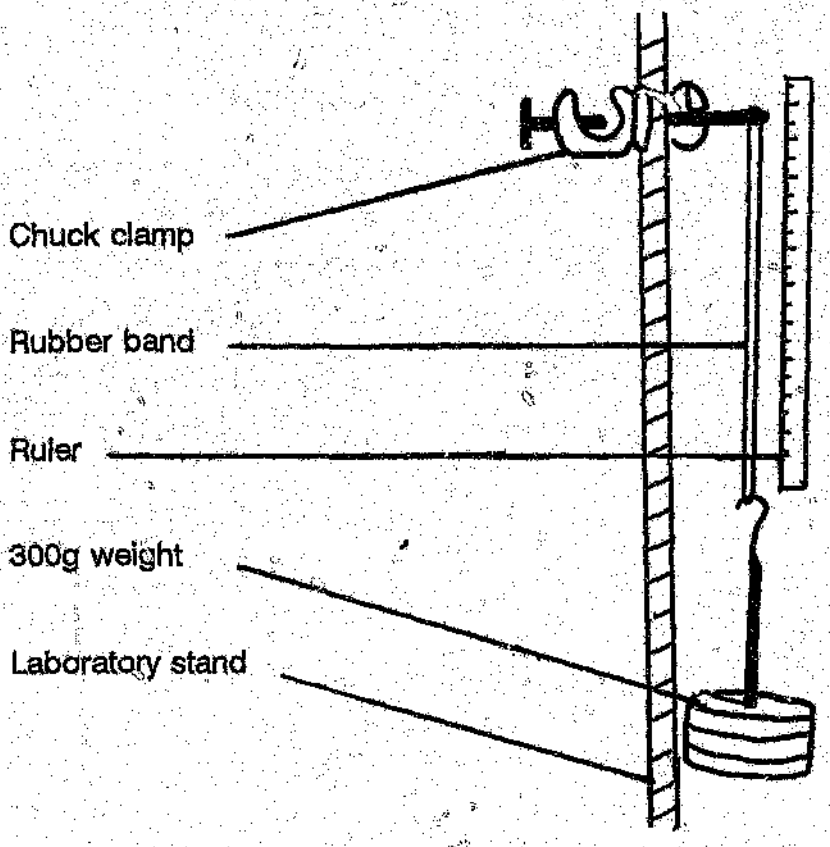

Figure 5.1. Measurement of rubber band to group together bands of similar length.

By a process of elimination, three rubber bands which were similar in length (within 5mm) when stretched by a 300g weight, were grouped together to form a set. This process was repeated to obtain ten different sets. Each set was kept in a separate envelope to ensure that the sets were not mixed. The lengths of the sets of rubber bands varied between 90mm and 120mm.

MEASURING DEVICE

A commercially available vernier caliper which measures up to a maximum of 150mm.

METHOD

Three splints were clamped horizontally to three laboratory stands. Using the first set of rubber bands, each band was attached to a fishing line loop to form a traction unit.

Each unit was then attached to one of the splints. In order to obtain comparable measurements, each rubber band of a set had to be marked at the same distance from its attachment to the splint. This was done in the following manner: a standard weight of 20g was hooked onto the fishing line loop of one of the traction units so that the rubber band was pulled taut in a horizontal position, with the fishing line passing over the outrigger (see Figure 5.2). (The 20g weight was selected as it was found that it was the minimum weight which was necessary to pull the rubber band taut, without applying tension). The same distance was marked off for each rubber band of a set.

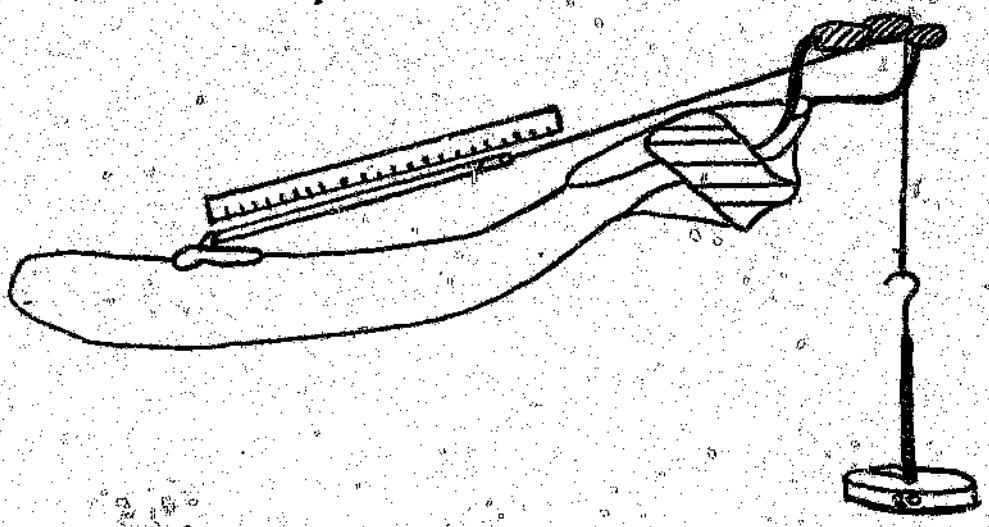

Figure 5.2. Marking the rubber band

The process of marking each rubber band was repeated for all ten traction units immediately before each experiment was carried out. Due to the fact that the rubber bands were not exactly equal in length, the distances from the attachments for the different sets varied between 90mm and 120mm, but they were equal for each rubber band in the same set.

FRICTION

Before continuing with the description of the procedure followed in this study, the term friction needs to be defined.

Friction type 1

The weight (300g) was hooked on to the fishing line loop, the fishing line passed over the outrigger and the weight was allowed to be pulled down further by the force of gravity (see Figure 5.3 and Figure 5.4).

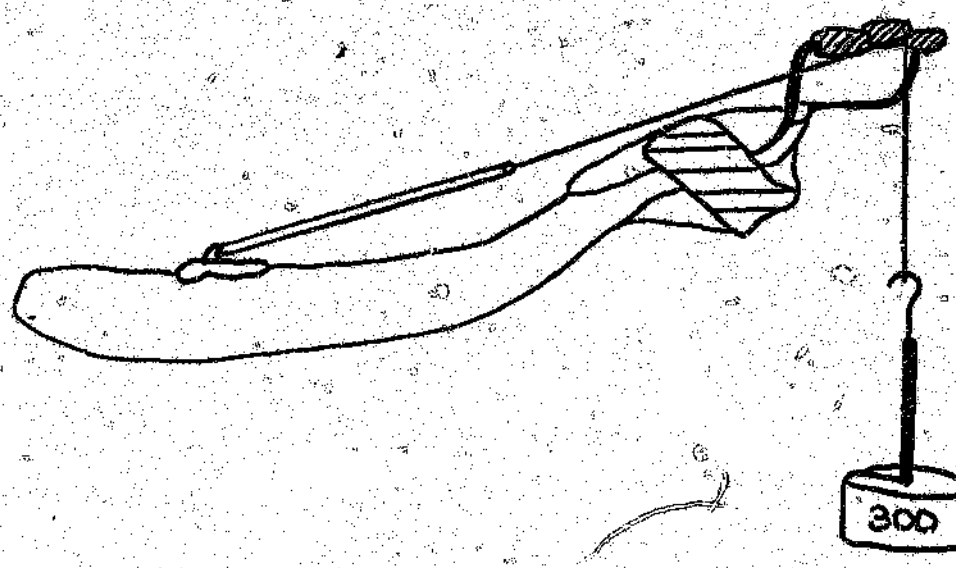

Figure 5.3. 300g hooked on fishing line

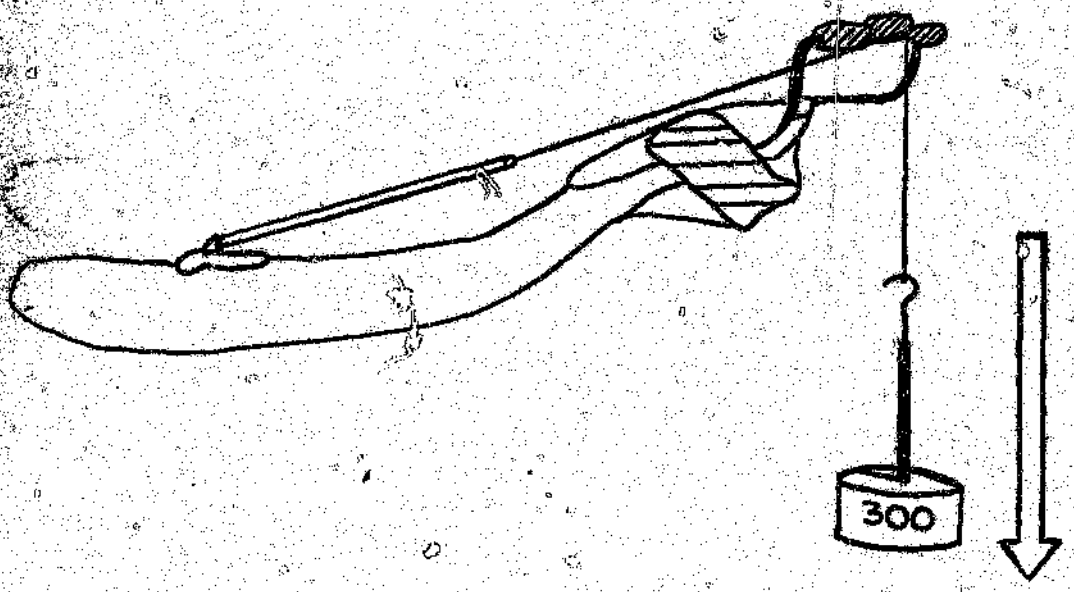

Figure 5.4. The weight was allowed to be pulled down by the force of gravity

It is important to note that no force was exerted on the rubber band by the researcher, as this was supposed to simulate the situation where a patient is fitted with a splint and does not flex the finger against the pull of the traction unit. The rubber band is allowed to exert an extending force on the finger. Friction type 1 enables the measurement of the amount of friction present before the outrigger.

Friction type 2

The weight (300g) was hooked on to the fishing line loop, the fishing line passed over the outrigger and the weight pulled down by the researcher until the rubber band touched the outrigger. The rubber band was then allowed to slowly return to its original length (see Figure 5.5 and Figure 5.6).

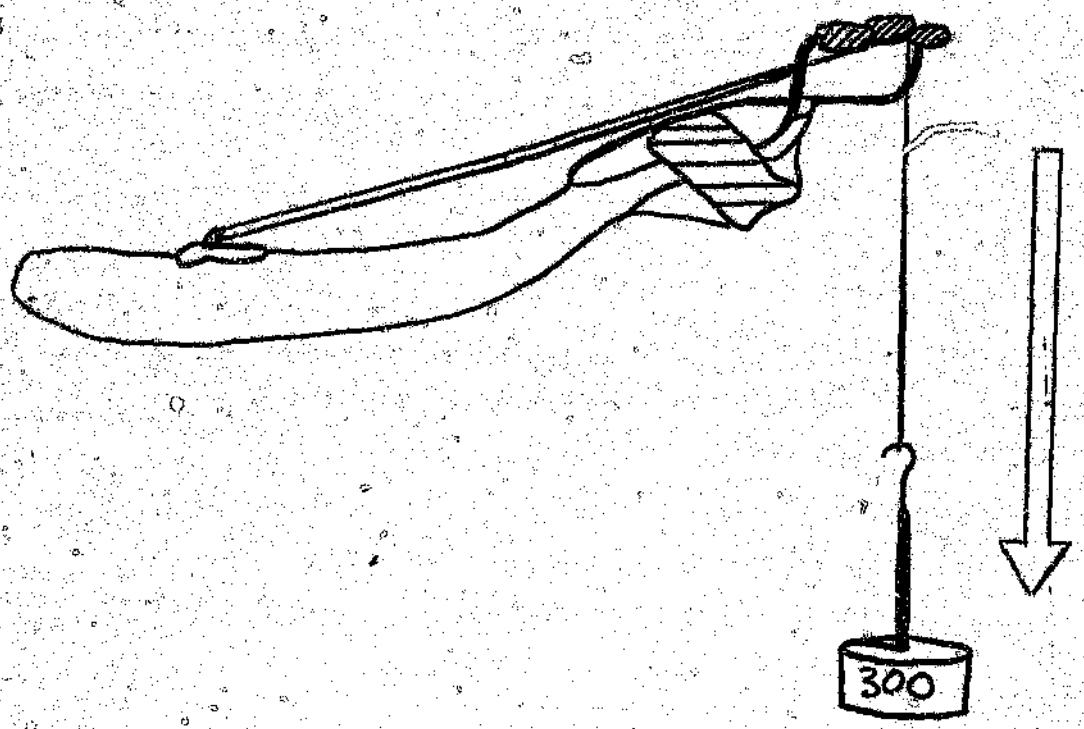

Figure 5.5. The weight is pulled down until the rubber band touches the outrigger

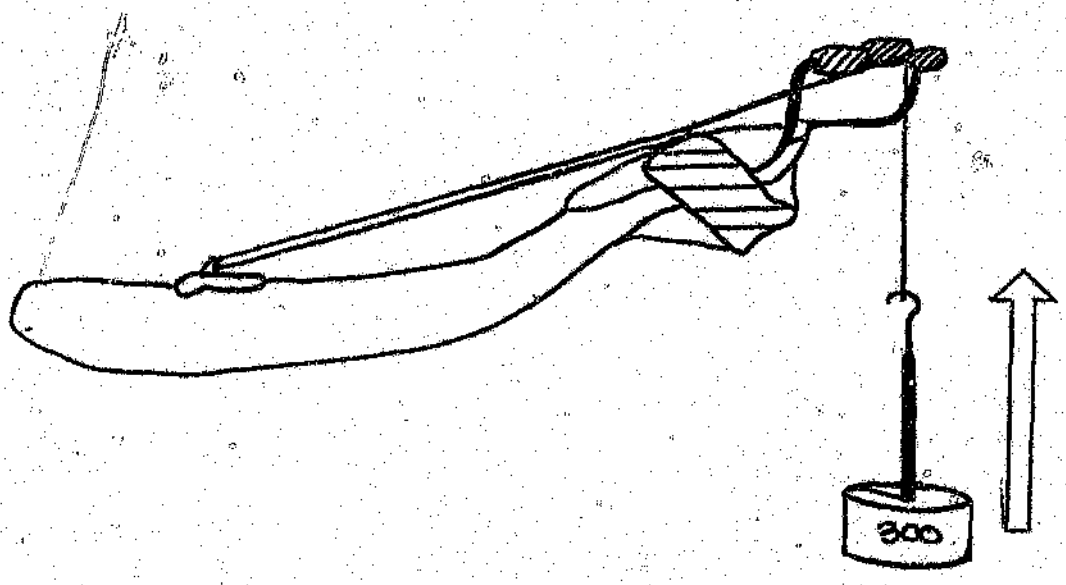

Figure 5.6. The rubber band is allowed to return to its original length

This simulated the condition when a patient actively flexes the finger against the force of the traction unit. On relaxation, the rubber band will tend to revert to its original state and the finger will be pulled straighter. Friction type 2 enabled the measurement of the amount of friction present after the outrigger.

Friction type 3

For control purposes, it was necessary to compare the amount of stretching of the rubber band in situations where friction was present, to stretching of rubber bands where there was no friction. To obtain a situation where there was no friction, the splint was turned upside down and the weight hooked onto the fishing line loop without the fishing line passing over the outrigger. In other words, the traction unit hung vertically (see Figure 5.7).

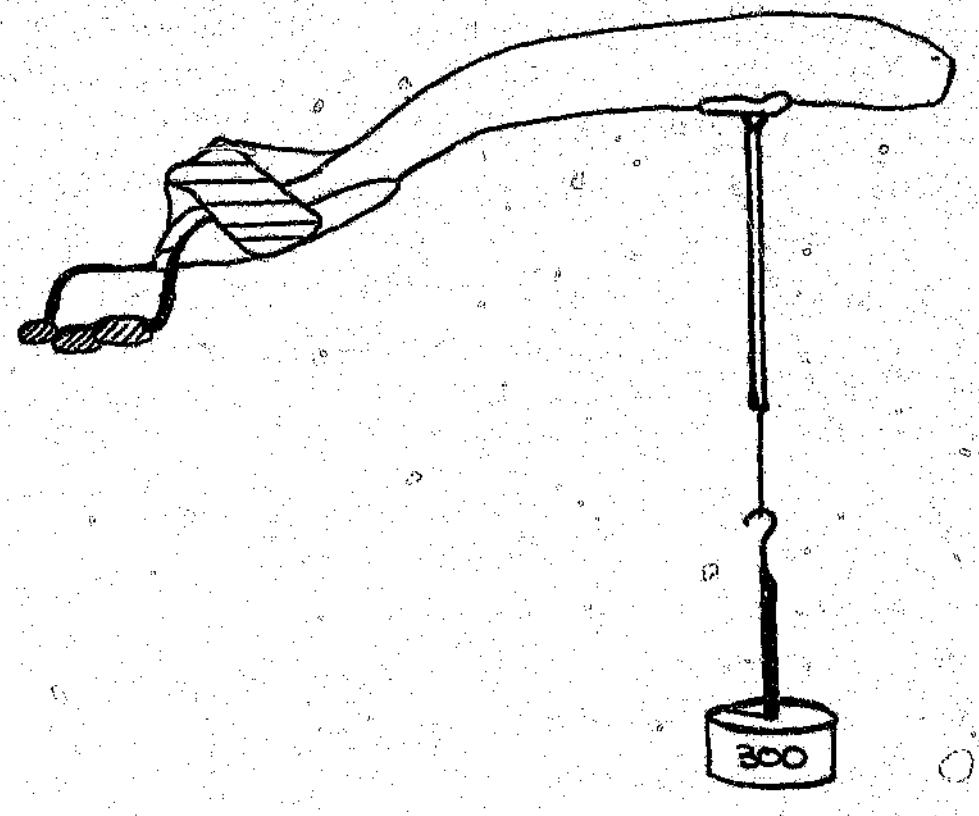

Figure 5.7. No friction present

Friction type 3 therefore, measured true lengthening of a rubber band when a weight was hung onto it, without the presence of friction.
See Table 4 for a summary of the three different types of friction.

TABLE 4

TYPES OF FRICTION TESTED IN STUDY 3

Type	Friction
1	Before the outrigger
2	After the outrigger
3	No friction

METHOD FOR STUDY 3 (CONTINUED)

After the set length of the rubber bands had been marked, this length, called the starting length of each rubber band, was recorded. One of the splints was selected and turned upside down on its stand. This splint (named C), was used to measure the amount of rubber band stretching without the presence of friction (type 3 friction). Another splint (named A), was selected and used to measure type 1 friction (friction before the outrigger). The remaining splint (named B) was used to measure type 2 friction (friction after the outrigger). Three standard 300g weights were hung onto each of the traction units in the method described above.

The stretched lengths of each rubber band were measured and recorded in millimetres using a vernier caliper from the attachment to the previously marked point. All weights were removed, the rubber bands were allowed to return to their original lengths and the weights were re-attached to the same traction units, using the same method for each one. The amount of lengthening was measured and recorded again. This was repeated once more. The three measurements were later used to calculate a mean value for each type of friction. After the three measurements for the three different types of friction had been completed, the splints were changed around in order to measure a different type of friction. This was done to eliminate any bias

which may have been present because of the use of three different splints. Splint A was used for friction type 2; splint B for friction type 3 and splint C for friction type 1. Thereafter the same procedure as described above was repeated. Three measurements for each of the three different types of friction were obtained and recorded. After this was completed, the splints were changed around once more, to ensure that each splint was used to measure all three different types of friction. This time splint A was used for friction type 3, splint B for friction type 1 and splint C for friction type 2.

See Table 5 for a summary of the use of each splint in each trial.

TABLE 5

SPLINTS USED TO MEASURE EACH TYPE OF FRICTION

Trial	Splint A	Splint B	Splint C
1	friction type 1	friction type 2	friction type 3
2	friction type 3	friction type 1	friction type 2
3	friction type 2	friction type 3	friction type 1

The above was carried out with the three rubber bands in set number 1. The above procedure was then duplicated with the remaining nine sets of rubber bands. A total of 270 measurements were obtained: 30 rubber bands were measured three times each for three different types of friction (30 x 3 x 3 = 270).

RESULTS

In order to determine whether or not there were any significant differences between the three types of friction, a 3 x 3 Latin square, repeated ten times, was used. This method also eliminated possible differences as a result of errors of observation.

The results of the analysis of variance done on a 3 x 3 Latin square basis, can be seen in Table 6

TABLE 6

ANALYSIS OF VARIANCE

Factors	Degrees of freedom (df)	Sum of squares (ss)	Mean square (mse)*	F	P
Friction types	2	28028,433	14014,217	206,4079	<0,0001
Common errors	20	1357,9145	67,8957		
* $\sqrt{MSe}$ = 8.24 and estimates the standard deviation					

The calculated F-value was highly significant at a p=0,0001 level. This indicated that there were significant differences between the three types of friction.

Since the analysis of variance had determined that there were significant differences between the types of friction and that possible differences which could have been ascribed to errors in observation had been eliminated, it was subsequently possible to compare the two types of friction. This was done to determine which of the two types of friction, type 1 or 2 (friction before or friction after the outrigger), exerted the most friction. (Type 3 friction was used as a control and did not exert any friction at all. It was, however, used in calculations).

To compare the different types of friction, the mean values of the stretched rubber bands for each of the three different types of friction were calculated and are seen in Table 7.

TABLE 7

MEANS OF ALL THE FRICTION TYPES

Friction Type	Mean value
Type 1	135,36
Type 2	178,58
Type 3	157,49

Thereafter, the difference between the mean values was calculated using the paired t-test. It was found that the difference between type 1 and type 2 was the most significant. (See Table 8).

Paired t-tests were done on the different combinations of the three types of friction. The t-values are also seen in Table 8.

According to Bonferroni (Neter and Wassermann, 1974), the P-value should be corrected for the number of comparisons made. The more comparisons present, the smaller the P-value should be. In this case, there were three comparisons.

TABLE 8

PAIRED COMPARISONS OF THREE METHODS TO DETERMINE FRICTION

Comparison	Difference (of means)	T-value	P-value
2 vs 1	43,22	28,71	<0,0001 *
3 vs 1	22,13	14,71	<0,0001 *
2 vs 3	21,09	14,02	<0,0001 *
* P = <0,0167			

The calculated P-value was 0,0167 (0,05 divided by 3 = 0,0167). Therefore, a P-value less than 0,0167 was significant at a 5% level of significance.

This meant that friction was definitely present at the outrigger and that it would have a significant influence on the amount of force exerted on a finger.

The null hypothesis was therefore rejected. Friction was present between the fishing line and the outrigger of a splint.

DISCUSSION

Study 3 was performed paying great attention to detail. Each rubber band in a set was matched as closely as possible, the starting length of each rubber band was carefully recorded and the same distances from the attachment on the rubber bands were always compared with each other. All rubber bands were tested for all three different types of friction, therefore, the possibility of rubber bands influencing the outcome of the study was excluded.

This study clearly indicated that friction of the fishing line over the outrigger plays a significant role in determining how much force is exerted on a finger by the splint. This was also found by Gyovai and Wright Howell in 1992.

In order to manufacture a splint which would enable a therapist to measure as accurately as possible the amount of force exerted on a finger, the materials used needed to be tested to determine which displayed the least amount of friction. This was undertaken in Study 4.

CHAPTER VI

STUDY 4

INTRODUCTION

Once it was determined that friction was definitely present around the outrigger of the splint, the next step was to determine whether the use of different materials could decrease the amount of friction between the outrigger and the traction unit.

Two different types of materials were chosen: a Teflon covering for the outrigger and polyester sewing thread to replace the nylon fishing line. The polyester sewing thread was used to imitate unwaxed dental floss, mentioned in the literature (Fess and Philips 1987). Since polyester sewing thread can be obtained more easily than unwaxed dental floss in an occupational therapy section, this was used in Study 4.

AIMS

1. To determine whether covering the outrigger with Teflon reduces the amount of friction; and
2. to determine whether polyester sewing thread causes less friction over the outrigger than nylon fishing line.

NULL HYPOTHESES

1. There is no difference in the amount of friction caused by an outrigger covered with Teflon and one without Teflon.
2. There is no difference in the amount of friction caused by nylon fishing line and polyester sewing thread.

MATERIALS

1. Two similar dorsal dynamic PIP extension splints as described in Chapter III (page 23), with outriggers shaped to follow the contour of the PIP joints. Small pieces of thermoplastic material were attached to the outrigger at regular intervals (approximately 10mm apart) to act as stoppers which prevented the fishing line or thread from slipping off the outrigger (see Figure 6 which illustrates a splint which was used clinically. The thermoplastic stoppers were used to correctly align the fishing line).



Figure 6. The outrigger showing the thermoplastic stoppers

2. Two small pieces (15mm x 10mm each) of sticky backed Teflon-covered paper were wrapped around the outrigger of one of the splints between the thermoplastic stoppers of the experimental splints.
3. Forty rubber bands selected from a batch of size 32 Replica rubber bands were divided in sets in the same manner as described in Chapter III (page 23). This time, however, since four different combinations were to be tested, ten sets of four rubber bands were selected (giving a total of forty rubber bands).

4. Two 300mm pieces of nylon fishing line with a breakage strength of 3,6kg which were knotted to form two loops, each 140mm long.
5. Two 300mm pieces of polyester sewing thread which were also knotted to form two loops of 140mm.
6. Four standard weights of 300g, as described in Chapter V (page 37).

MEASURING DEVICE

A vernier caliper as described in Chapter V (page 38).

METHOD

The two splints were mounted on the stands in a horizontal position. Two fishing line loops were attached to two rubber bands from set number 1 and attached to splints A and B. The two sewing thread loops were attached to the remaining two rubber bands from set number 1 and also attached to the two splints. This meant that there were four different combinations to test:

1. nylon fishing line over a welding rod outrigger;
2. nylon fishing line over a Teflon covered welding rod outrigger;
3. polyester sewing thread over a welding rod outrigger; and
4. polyester sewing thread over a Teflon covered welding rod outrigger.

All four rubber bands were marked at the same distance from the attachment point in the same manner as described in Study 3 (page 39). In Study 3 it was determined that friction type 2, (friction after the outrigger), displayed the most friction (see results of Study 3 on page 47). Therefore this method was chosen for the following experiment. Standard weights of 300g were hooked onto each of the traction units in such a way that the fishing line and the sewing thread passed over the outriggers. The weights were pulled down until the rubber bands touched the outriggers. The weights were allowed to slowly return to their starting lengths, until the weights no

longer moved. The lengths of the four different stretched rubber bands were measured from their attachment point to the previously made marks, using a vernier caliper.

The measurements were recorded, after which the weights were removed and the procedure repeated twice for each traction unit. This gave three measurements for each combination. After three measurements for each combination were completed, the rubber bands were removed and replaced with another set of four similar rubber bands. The procedure described above was followed and repeated with the other eight sets of rubber bands. A total of 120 measurements were recorded: ten sets of rubber bands were measured three times each for four combinations (10 x 3 x 4 = 120).

RESULTS

Four combinations were tested:

1. fishing line over a welding rod outrigger;
2. fishing line over a Teflon coated welding rod outrigger;
3. polyester sewing thread over a welding rod outrigger; and
4. polyester sewing thread over a Teflon coated welding rod outrigger.

The mean of the difference between the starting lengths and the stretched lengths of the rubber bands of the traction units passing over the two different types of outriggers (Teflon and welding rod) were compared with each other (T vs W). The same comparison was made for the different types of thread, namely nylon fishing line and polyester thread (N vs P). Thereafter, the mean of the difference between starting lengths and stretched lengths of the rubber bands of the two different outriggers were compared to the different types of thread (outrigger vs thread). An analysis of variance was undertaken to compare the four different materials with each other in order to determine whether there were significant differences between the four different materials and to eliminate differences which could be ascribed to errors

of observation. The results can be seen in Table 9.

TABLE 9

ANALYSIS OF VARIANCE TO COMPARE THE FOUR MATERIALS

Factors	Degrees of freedom (df)	Sum of Squares (Ss)	Mean Square (mse)•	F	P
T vs W	1	6987,30	6987,30	74,12	0,0001**
N vs P	1	431,19	431,19	4,57	0,0417*
Outrigger vs thread	1	42,70	42,70	0,45	0,5066
* $p \leq 0,05$ shows a significant difference between the two factors ** $p \leq 0,0001$ shows a highly significant difference between the two factors					
• $\sqrt{MSe} = 9.71$ and estimates the standard deviation					

From the above table it is clear that there was a highly significant difference (p=0,0001) on a 1% level of significance between the outrigger covered with Teflon and the one which was not covered with Teflon.

There was also a significant difference (p=0,0417) on a 5% level of significance between the fishing line and the polyester sewing thread.

The p-value for outrigger vs thread = 0,5066. Since this was larger than 0,05 the difference was not significant. This meant that it was not possible to quantify the interaction between the type of outrigger and the type of thread and therefore the materials needed to be compared separately.

Since the analysis of variance had determined that the differences between the different materials were significant and that possible differences could not be ascribed to error of observation, it was possible to determine which materials performed best.

In order to do this, the mean lengths of the rubber bands for the four different materials were calculated. Comparisons were made between the two outriggers and between the two types of thread. (See Table 10).
Since friction type 2 (after the outrigger) was tested, this meant that the smaller the mean length of the rubber band, the less friction was present.

TABLE 10

MEAN LENGTHS(mm) OF THE RUBBER BANDS FOR THE FOUR MATERIALS

Material		Mean length
OUTRIGGER	Welding rod outrigger	182,18
	Welding rod covered with Teflon	155,75
THREAD	Nylon fishing line	86,68
	Polyester sewing thread	172,25

In Table 10 it can be seen that the welding rod covered with Teflon performed better than the welding rod only. Nylon fishing line performed better than the polyester sewing thread, since the mean length was smaller.

DISCUSSION

Type of outrigger

From Table 9 it is clear that there was a highly significant difference between the two types of outriggers (p=0,0001).
Since the mean length of the rubber bands of the traction unit passing over the Teflon covered welding rod outrigger was the smallest (see Table 10), it meant that the friction was least in this instance. The reason for this is that friction used in this study, was type 2 (friction after the outrigger, where the weight is pulled down and allowed to slowly move back to its starting position). In type 2 friction it followed that the shorter the length of the stretched rubber band, the less friction was present between the outrigger and the thread. (The easier it was for the rubber band to

return to its original length after it had been stretched, the less friction was present).

Type of thread

For the same reason, the nylon fishing line was also found to perform better than the polyester sewing thread, as the mean length of the rubber bands attached to the fishing line was less than that of the rubber bands attached to the polyester sewing thread (see Table 10). Since there was a significant difference (p=0,0417) between the two types of thread (see Table 9), it could be deducted that nylon fishing line causes less friction than polyester sewing thread.

This meant that the null hypotheses as stated on page 49 should be rejected, namely:

1. there is no difference in the amount of friction caused by an outrigger covered with Teflon and one without Teflon; and
2. there is no difference in the amount of friction caused by nylon fishing line and polyester sewing thread.

The results of this study indicate that in order to decrease the friction between the outrigger and the traction unit, the outrigger should be covered in Teflon and fishing line should be used as part of the traction unit.

CHAPTER VII

STUDY 5

INTRODUCTION

Although it was found that an outrigger made from a Teflon covered welding rod and a traction unit made from nylon fishing line caused the least amount of friction, a number of problems still made the splint impractical for clinical use. These problems could be grouped under two headings, those associated with the outrigger and those associated with the traction force (rubber bands).

5.1 Problems with the traction force

The rubber bands used in all the studies were unreliable and inconsistent. This meant that it was not possible to determine accurately the amount of force exerted on the finger, hence it was still a matter of guess work.

The methods used to overcome this problem are discussed below:

5.1.1 Inconsistent and unreliable rubber bands

In an attempt to determine the force exerted by the rubber bands, a stress-strain curve was recorded for five different rubber bands from the same batch using Hooke's apparatus available at the Pretoria Technicon.

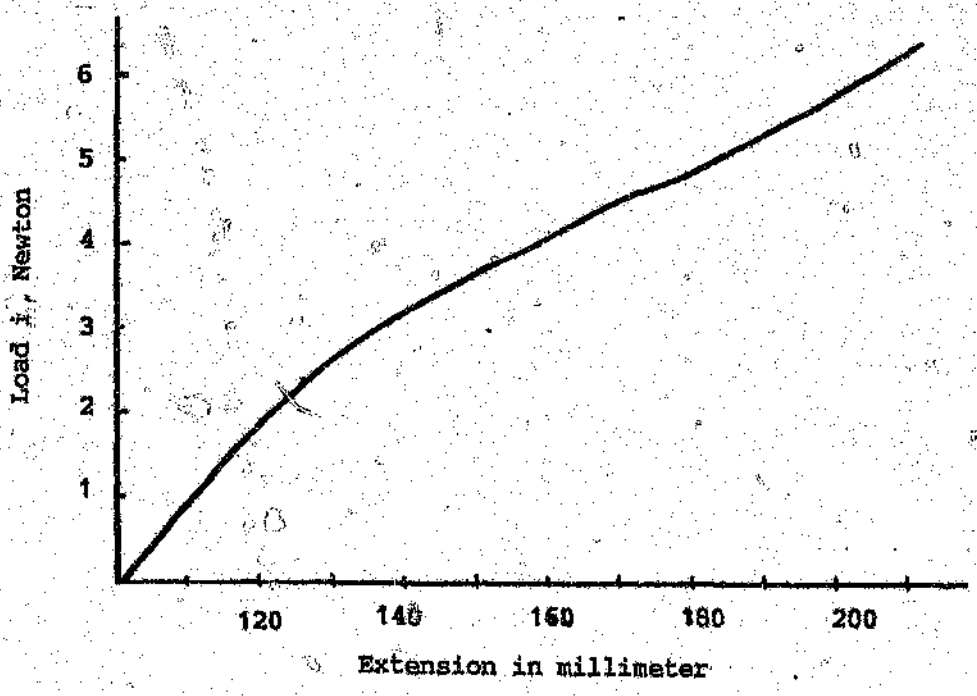

Graph 1. Stress vs. strain curve

This curve demonstrates how much a rubber band would lengthen if an increasing force was applied to it. The starting length was 100mm.

Since the force exerted on a finger by a rubber band is determined by its starting length, thickness and width, the curve could be used to ascertain how much a rubber band should lengthen when a specific force was required.

5.1.2 Use of the stress-strain curve

The method used to calculate the extent to which a rubber band had to lengthen to exert a specific load (force) on a finger, is described below:

1. The stress-strain curve from graph 1 (where the y-axis displays load in Newton and the x-axis the extension of the rubber band in millimetres) was transposed onto a second graph, the load vs extension curve (see Graph 2).

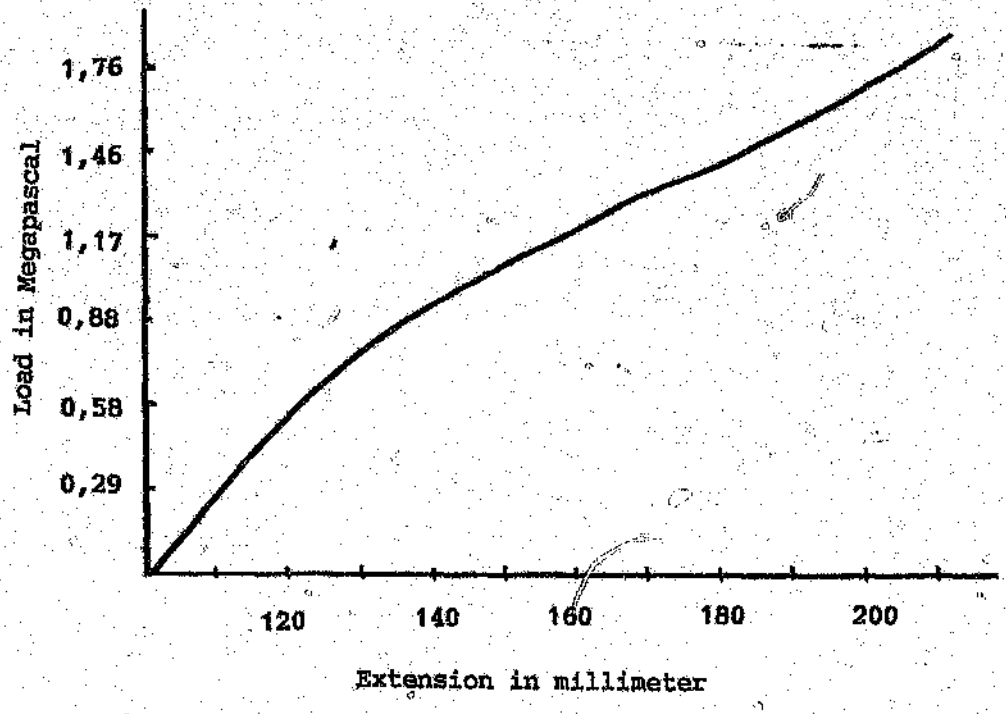

Graph 2. Load vs. extension curve

In the second graph the load in Megapascal is displayed on the y-axis and extension of the rubber band in millimetres on the X-axis.

2. The thickness and width of the rubber band were determined using a standard vernier caliper. The area of load of the rubber band was calculated by multiplying thickness by width (area = thickness x width).
3. Once the amount of force required for the splint was known, it was possible to calculate the number of Newton (N) using the following equation:

Newton (N) = 1kg x gravitational acceleration

Therefore: N = $\frac{\text{grams load}}{1000}$ x 9,81

4. The number of megapascals were then calculated by dividing the Newtons by the area of load:

$$\text{Megapascals} = \frac{\text{Newtons}}{\text{area of load}}$$

5. From the Load vs Extension curve, on graph 2, the Megapascal value was found on the y-axis. A horizontal line was drawn at this point and where the line cut the curve, a vertical line was drawn which enabled the researcher to read off how much the rubber band had to lengthen to obtain that load. (See Graph 3)

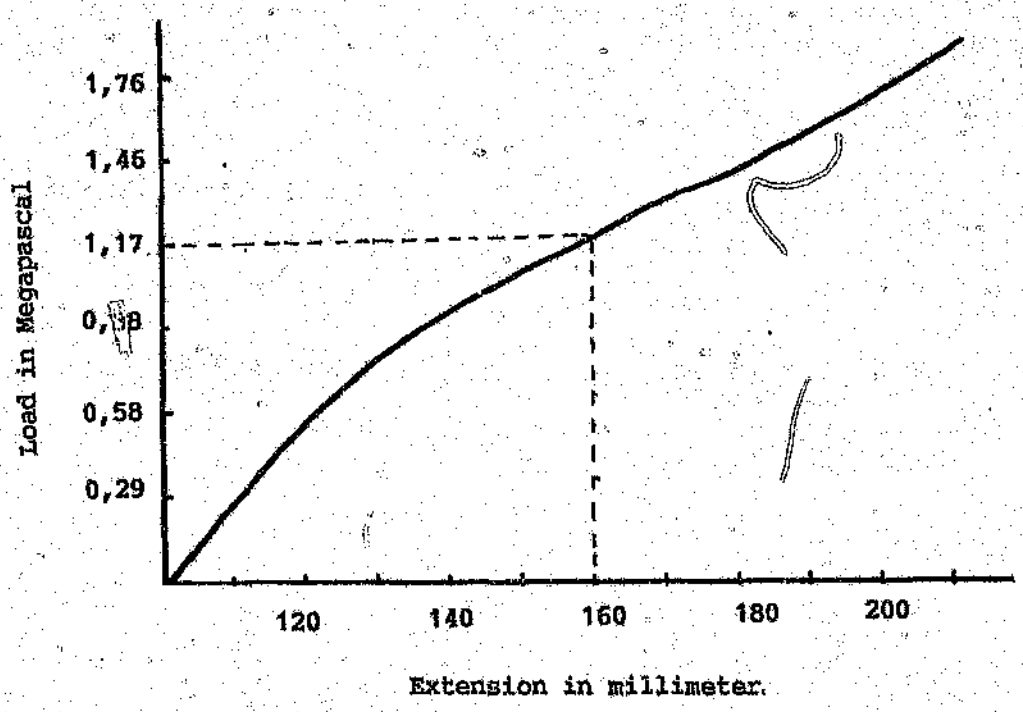

Graph 3. Load vs. extension curve showing the required lengthening of a rubber band.

6. After 100mm was marked on the rubber band, it was stretched to the extension value read off Graph 2.

7. This length would then ensure that the pre-determined force was exerted on the finger, providing the rubber band hung freely or did not pass over an outrigger.

The method is illustrated by the following example:

Say that a force/load of 300g was required, using a rubber band which is 1mm thick, 2,5mm wide and has a starting length of 100mm:

1. Calculate Newton (N)

$$N = \frac{\text{grams load}}{1000} \times 9,81$$

$$= \frac{300}{1000} \times 9,81$$

$$= 2.943$$

2. Calculate Area of Load (A)

$$A = \text{thickness} \times \text{width}$$

$$= 1 \times 2,5\text{mm}$$

$$= 2,5$$

3. Calculate Megapascals (Mp)

$$Mp = \frac{\text{Newton}}{\text{Area of Load}}$$

$$= \frac{2,943}{2,5}$$

$$= 1,1772$$

4. Using graph 3, read off the required lengthening for a load of 1,1772Mp. Lengthening = 161mm

The method described above could be used in a clinical setting, although it is fairly time consuming. However, there was another problem, namely that the method described above could only be used in a high profile splint, where the traction unit

did not have to pass over an outrigger. No allowances were made for the presence of friction over an outrigger, which could alter the amount of force exerted on the finger.

Furthermore, the calculations were very time consuming and complicated. Since the instrument required to draw the stress vs. strain curve was also not easily available, the practical use of the above calculations was limited. Even if the calculations could be simplified and allowances made for friction, the rubber bands were still unreliable. They could not provide a constant, repeatable force, therefore another, more reliable traction force had to be found.

5.1.3 Use of tension springs

Since tension springs were being described and used elsewhere (Rouzaud and Allieu (1987), Fess and Philips (1987)), it was decided to use tension springs in further experiments.

According to Breger-Lee and Buford (1991):

"...Springs are more durable, shelf life is excellent and they provide a consistent and controlled force. ..(Springs) demonstrate negligible creep and hysteresis and no detectable fatigue". (Hand Clinics 7 p. 572) .

The researcher discussed her needs with a manufacturer of tension springs (STARCO SPRINGS, see appendix 1) who suggested that he manufacture a batch of 200 springs with the following specifications:

* stainless steel (would not rust when used)
* 53mm in length (to leave enough space for elongation on a splint)
* 5mm in diameter (to make them larger would be impractical)
* initial tension of 50g (all springs have an initial tension)
* loops at either end (to facilitate attachment to splint and fishing line loop)
* tension of the springs being 3g/mm (the spring lengthens 20mm for every 60g applied to it)

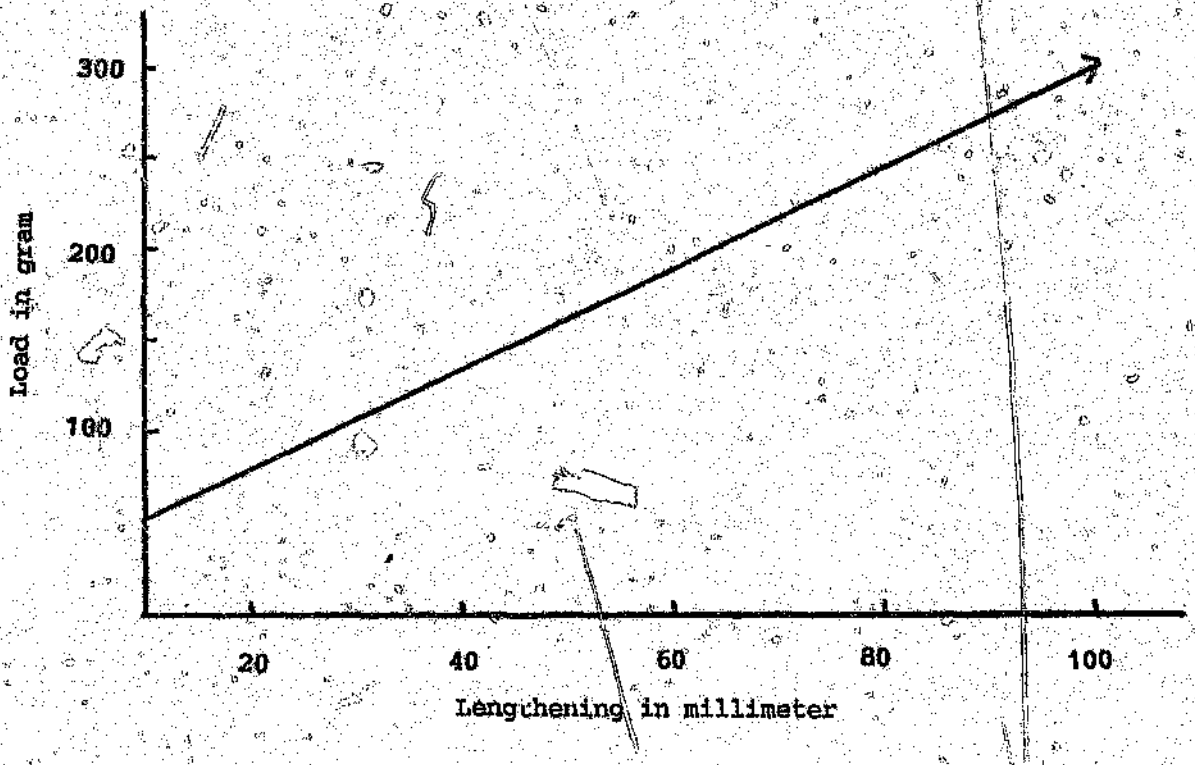

Graph 4. Force elongation curve for tension spring.

From the graph it can be seen that the springs have a linear acceleration, which is more reliable than the curved acceleration characteristic of rubber bands. (See Graph 1 and Graph 4).

Stainless steel springs were therefore used in subsequent experiments.

5.2 **Problems with the outrigger**

Two problems were experienced:

1. Teflon paper used in Study 4 was not suitable for clinical use; and
2. the nylon fishing line slipped easily and got caught between the thermoplastic stopper and the outrigger.

These problems were addressed as follows:

5.2.1 Teflon paper used in Study 4 was not suitable for clinical use

The reason for this was that it was difficult to get the paper to stick to the outrigger. Once it was attached to the outrigger, it unravelled after the splint had been used for a few hours. Various solutions to this problem were discussed and pursued. Teflon wheels, specially turned tubes of Teflon and a whole outrigger made out of Teflon were suggested, but discarded, due to logistical reasons and the prohibitive cost. (A quote obtained for Teflon wheels was R12 per wheel).

A solution was found by coating the outrigger with Graffitix paint containing Teflon manufactured by Amalgamated Chemical Industries. This paint was specifically developed for the covering of graffiti prone walls and since it contains Teflon, it was used to coat the copper welding rods instead of the Teflon paper. However, this paint needed ten to fourteen days to dry completely before being used.

5.2.2 Slipping of the nylon fishing line.

Since the outrigger was shaped to follow the contour of the PIP joints (see Figure 6), thermoplastic stoppers were needed to prevent the fishing line from slipping off the outrigger.

However, this became more of a problem once the outrigger was coated with Teflon because it became more slippery and the fishing line easily got caught between the stopper and the welding rod. Therefore there was an increase in friction, instead of a decrease.

In order to decrease the slipping of the fishing line, a stepped outrigger was made and tested. A welding rod was first coated with a primer, left to dry and painted with a layer of Graffitex paint. The paint was allowed to dry for 2 weeks (as advised by the manufacturer) and then the welding rod was shaped into a stepped outrigger, using a jig. The jig consisted of a small metal plate, 50mm x 80mm in size, two small pieces of a metal rod, 3mm in diameter and a square piece of 2mm thick metal were welded onto the plate. This jig

enabled the outrigger to be shaped in steps, as can be seen in Figure 7.1.

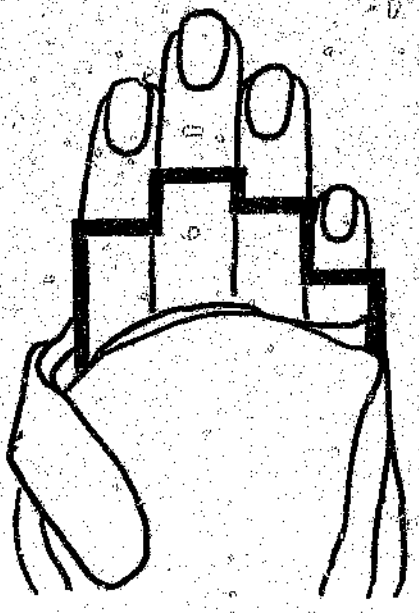

Figure 7.1. The stepped outrigger

The splint with the stepped outrigger, covered with Graffitex paint, was tested in the clinical section at Ga-Rankuwa hospital to determine whether these were acceptable solutions to the above problems. Unfortunately, two further problems arose:

i) the Graffitex paint tended to flake off where it had not been applied evenly; and

ii) the fishing line still tended to slip off the outrigger despite the newly designed steps.

The first problem was solved by dipping the welding rod into the Graffitex paint instead of applying it with a paint brush.

The second problem necessitated the re-introduction of thermoplastic stoppers (see Figure 7.2) whereas it was hoped that these could be discarded because the fishing line could still get caught between the stopper and the welding rod.

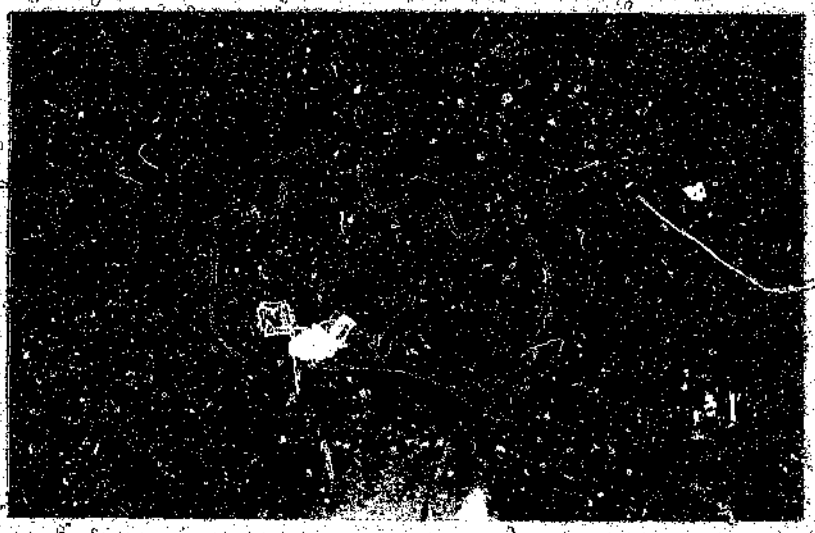

Figure 7.2. The stepped outrigger with thermoplastic stoppers

A more acceptable and workable solution had to be found. A tool was sought which could be used to make a small notch in the outrigger. This proved to be impossible, as no tool was both fine and strong enough to achieve this. Furthermore, pliers used to bend a notch in the welding rod caused a sharp nick in the rod. This was unacceptable, as the fishing line would then fray and tear due to the sharp notch once it had moved over the outrigger a few times.

When no tool could be found, the problem was solved by making a jig to bend the outrigger. (See Figure 7.3).

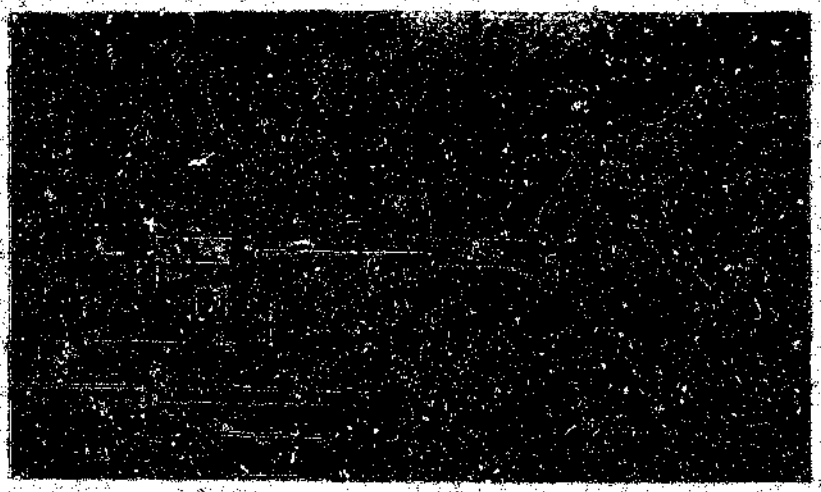

Figure 7.3. Jig, developed to make notches in the welding rod

With this jig it was possible to bend the 2,5mm copper coated welding rod to form as many notches as necessary. The depth of the notches as well as the distance between them, could be varied (see Figure 7.4). The notch itself was completely smooth, causing no fraying of the fishing line. (A detailed drawing of the jig is found in Appendix 2).

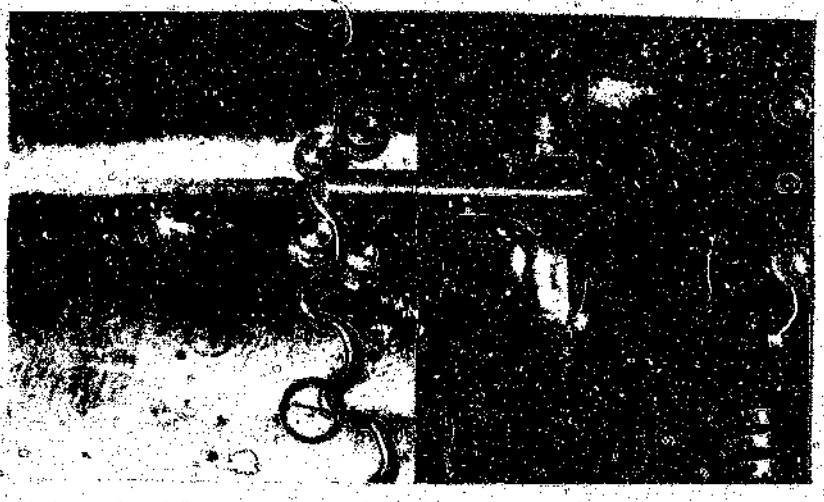

Fig 7.4. The notches in the welding rod, made by the jig

At about the same time as when the jig was being developed, the splinting company, Smith and Nephew, introduced a new method of dynamic splinting, using ROLYAN ADJUSTABLE OUTRIGGER SYSTEMS. The outrigger system consists of an extender rod, a piece of outrigger wire and a rod adjuster. The stainless steel rods have a number of advantages: they are adjustable in length and height, according to the contour of the hand, they are smooth and easy to attach to the splint base, they do not require any thermoplastic stoppers and look neat and professional.

Due to the fact that these systems had to be imported, they proved to be too expensive. However, a South African engineer, Mr MJ Bleloch, from Spectra-Medic (see Appendix 1), modified the outrigger design slightly to avoid breach of copyright and marketed an adjustable outrigger system similar to the Rolyan system. (See Figure 8.3 on page 72).

The Spectra-Medic system consists of a stainless steel outrigger, a stainless steel rod and an aluminium alloy rotating disc. As this system was available locally and seemed to display many benefits for dynamic splinting, it was compared to a system using a welding rod. This study is described in Chapter VIII.

CHAPTER VIII

STUDY 6

INTRODUCTION

As the Spectra-Medic outrigger system seemed to have apparent advantages over the welding rod outriggers, it was necessary to scientifically validate these advantages.

AIM

The aim of this study was to compare two different outrigger systems, welding rod and Spectra-Medic, to determine which one was the most efficient, using the following determinants:

1. cost
2. accuracy of positioning
3. friction over the outrigger
4. disadvantages/problems experienced.

1. COST

TABLE 11

COMPARISON IN COST: WELDING ROD VS SPECTRA-MEDIC SYSTEM (1990)

TYPE OF OUTRIGGER (for four fingers)	COST
2.5mm Copper coated welding rod	R 0.30
Spectra-Medic system	R35.60

As can be seen from Table 11, the welding rod costs considerably less than the Spectra-Medic system and therefore may be the material of choice. However, it is the

researcher's opinion that cost alone should not determine which outrigger should be used. Other factors should also be considered before a decision is made as to which type of outrigger to use.

2. ACCURACY OF POSITIONING

The Spectra-Medic system consists of four separate outriggers. Therefore it was easier to accurately position the different outriggers, ensuring a 90 degree angle of pull for each finger. This is clinically important when the maximum passive extension of the PIP joints of the four different fingers is not equal. The outriggers can be adjusted by simply releasing the small nut with an Alan key, adjusting the length and/or angle of the rod and tightening the nut.

Adjustment of the welding rod outrigger is more difficult and less accurate, as one outrigger is used for four fingers. Should there be a difference in the passive mobility of the PIP joints, separate outriggers need to be manufactured, so that the stiffer finger joints are splinted on their own. Once the passive mobility of the stiffer joints are equal to the other fingers, traction on all four fingers can be exerted using one outrigger. This means that improvement in some finger joints may be delayed, whilst waiting for the stiffer joints to gain mobility. Clinically therefore, in this aspect, the Spectra-Medic system is a better system.

3. FRICTION BETWEEN THE FISHING LINE AND THE OUTRIGGER

Study 5 established that friction over the outrigger was a factor to consider when using dynamic splints. It was therefore necessary to ascertain whether the Spectra-Medic system displayed less friction than the welding rod outrigger.

The next study was designed to determine whether there was a difference between the amount of friction displayed by the two outrigger systems. This study was similar to the study described in Chapter VI (page 49), except that the pre-made tension

springs were used instead of the rubber bands used in the previous studies. The reason for this was that they were far more reliable and consistent than rubber bands (Breger-Lee and Buford, 1992). Since all tension springs were uniform in length and tension, it was not necessary to make up sets of springs, as in the case of the rubber bands.

AIMS

1. To determine which of the two outrigger systems, welding rod or the Spectra-Medic, displayed the least amount of friction.
2. To determine whether Teflon paint reduced the amount of friction between the fishing line and the outriggers.

NULL HYPOTHESES

1. There is no difference in friction over the outrigger using a copper coated welding rod or the Spectra-Medic system.
2. An outrigger coated with Teflon paint does not display less friction than one without a covering of Teflon

MATERIALS

1. Two dorsal dynamic finger extension splint bases, as described in Study 1 (page 23). One base was fitted with two outriggers made from 2,5mm copper coated welding rods (Figure 8.1).

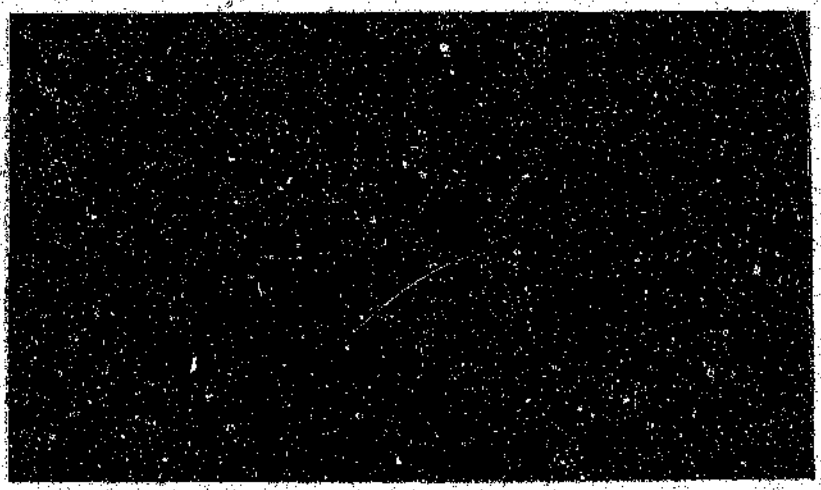

Figure 8.1. The two copper-coated welding rod outriggers mounted onto one splint base. One notch was dipped in Teflon paint.

Notches were made in both welding rods using the jig described in Chapter VII (page 66). One of the outriggers was dipped into the Teflon paint (see Figure 8.2) and allowed to dry for two weeks before it was mounted onto the splint base whilst the other was left uncoated.

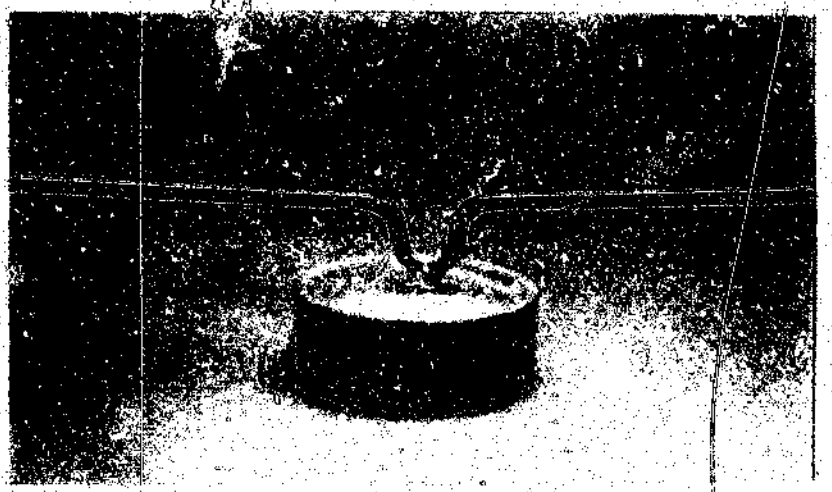

Figure 8.2. A notch is dipped into Teflon paint

The other base was fitted with two Spectra-Medic outrigger systems. One of the stainless steel rods was dipped into Teflon paint and allowed to dry for two weeks before it was mounted onto the splint base and the other was left uncoated. (Figure 8.3).



Figure 8.3. The two [illegible] outriggers, one of which was [illegible] paint.

2. Eight tension springs, 5mm in diameter, 58mm in length with an initial tension of 50g and loops on both ends. The tension of the springs was 3g/mm. The tension springs were manufactured by STARCO SPRINGS, Johannesburg (see Appendix 1). The eight springs were randomly selected (by choosing eight springs out of a box) from a batch of 200 and numbered from 1 to 8.
3. Four 300mm lengths of nylon fishing line with a breakage strength of 3,6kg, knotted to form four 140mm loops.
4. Two standard laboratory stands and chuck clamps as described in Chapter III (page 24).
5. Four standard laboratory weights of 300g each, as described in Chapter V (page 37).

Measuring instruments

A vernier caliper as described in Chapter V (page 38).

Method

The two splints were mounted horizontally onto the two stands by means of two chuck clamps.

The outriggers were numbered as follows:

Welding rod only	A
Welding rod with Teflon paint	B
Spectra-Medic with Teflon paint	C
Spectra-Medic only	D

The starting length, which is the stretched length of a free hanging spring with a weight of 300g attached to it, was determined for the first four springs (numbers 1 to 4). This was undertaken in the following manner:

The spring was hooked onto a small horizontal bar, which is part of the chuck clamp. A weight of 300g was attached to the bottom loop, the spring was allowed to stretch and when there was no more movement, the stretched spring was measured. (See Figure 8.4). These lengths were recorded.



Figure 8.4. Determining the starting length of a free-hanging spring

Thereafter, each spring was attached to a fishing line loop to form four traction units. Two traction units were attached to each splint in such a manner that they all passed over a different outrigger:

Spring 1: outrigger A
Spring 2: outrigger B
Spring 3: outrigger C
Spring 4: outrigger D

A 300g weight was attached to each fishing line loop, the fishing line guided over the outrigger and the weight allowed to be pulled down by the force of gravity.

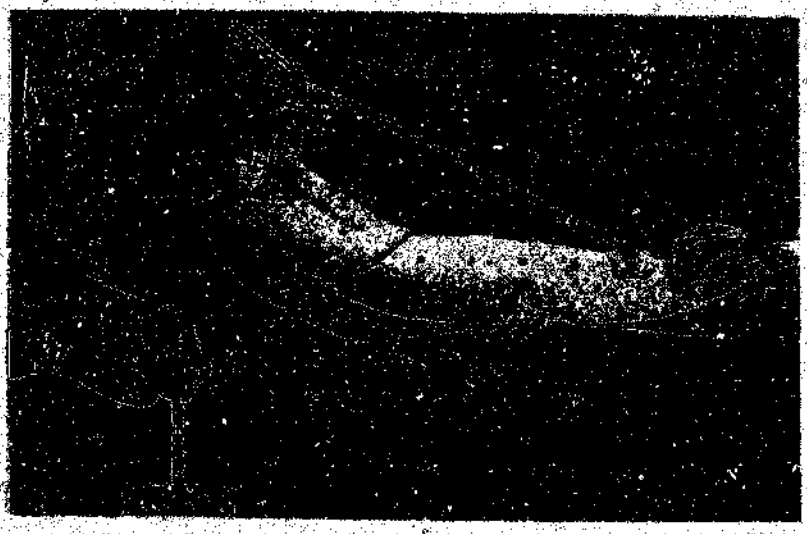

Figure 8.5. 300g attached to one of the fishing line loops

This method is also described in Study 3 as friction before the outrigger. (Friction type 1)



Figure 8.6. Friction type 1: The weight is allowed to be pulled down by the force of gravity

The elongated springs were measured with a vernier caliper and recorded. See Figure 8.7

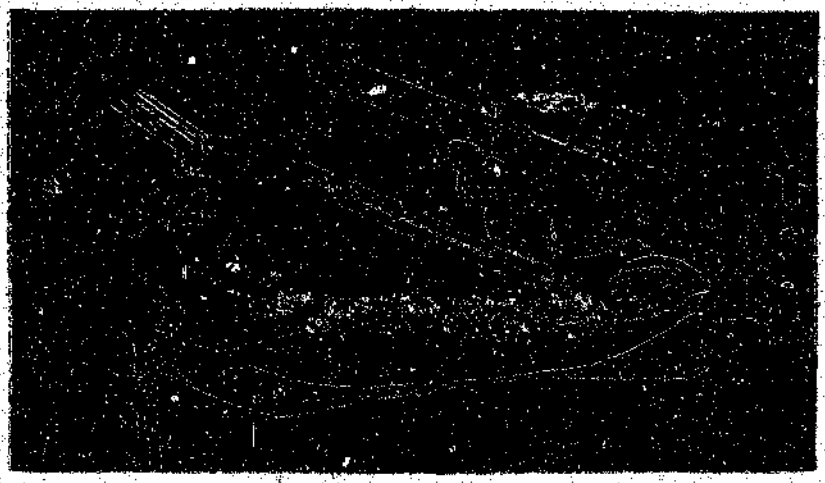

Figure 8.7. Using the vernier caliper to measure the elongation of the weighted springs

The weights were removed and the process repeated five times for each traction unit, as advised by the statistician.

Once this first trial was completed, each traction unit was removed from the first outrigger and attached to the next one in the following sequence:

Spring 1 to outrigger B
Spring 2 to outrigger C
Spring 3 to outrigger D
Spring 4 to outrigger A

The measurements were repeated five times and recorded. In order to ensure that all the traction units were tested on each outrigger, all traction units were attached to all the outriggers. See Table 12 for the sequence used. The springs are numbered from one to four.

TABLE 12

SEQUENCE OF SPRINGS AND OUTRIGGERS (1)

Outriggers	A	B	C	D
1st Trial	1	2	3	4
2nd Trial	4	1	2	3
3rd Trial	3	4	1	2
4th Trial	2	3	4	1

After the first four springs had all been measured, the second four springs (numbers five to eight) were measured in the same manner as described above. The sequence followed for the second group of four springs can be seen in Table 13.

TABLE 13

SEQUENCE OF SPRINGS AND OUTRIGGERS (2)

Outriggers	A	B	C	D
1st Trial	5	6	7	8
2nd Trial	8	5	6	7
3rd Trial	7	8	5	6
4th Trial	6	7	8	5

The procedure above describes the testing of friction before the outriggers. Using the same springs and following the same sequence, friction after the outrigger was tested in the following manner:

After the weight had been attached to the fishing line loop, it was passed over the outrigger and the weight was pulled down until the spring was elongated to 150mm and allowed to move back slowly. A distance of 150mm was selected as this was three times the resting length of the spring. This also meant that all four springs were always elongated (stretched) to the same distance. Once the springs stopped moving, the elongated springs were measured with a vernier caliper and the measurements recorded.

A total of 320 measurements for each outrigger were obtained (160 times for friction before the outrigger and 160 times for friction after the outrigger).

RESULTS

Two different types of friction were tested, friction before the outrigger and friction after the outrigger. The mean of the difference between the starting lengths of the tension springs (starting values) and the stretched lengths of the tension springs (observed values) were calculated for each type of friction and for each type of outrigger.

Results for friction before the outrigger will be discussed first (see Table 14).

TABLE 14

MEAN OF THE DIFFERENCES IN TENSION SPRING LENGTH OF THE FOUR DIFFERENT OUTRIGGERS (FRICTION BEFORE THE OUTRIGGER)

Outrigger	Mean difference (in mm)
A Welding rod only	22.90
B Welding rod with Teflon paint	18.25
C Spectra-Medic with Teflon paint	17.58
D Spectra-Medic only	21.15

The outrigger with the smallest mean difference displayed the least amount of friction. From Table 14 it can be seen that outrigger C, Spectra-Medic with Teflon paint performs best, as the mean difference between starting lengths and stretched lengths of the tension springs was the smallest.

To determine whether the differences between the outriggers were significant, the p-values were calculated for the comparisons between the different outriggers. These are shown in Table 15.

TABLE 15

P-VALUES FOR EACH COMPARISON (FRICTION BEFORE THE OUTRIGGER)

Comparison	Description	P Values
B vs. C	Welding rod with Teflon vs. stainless steel with Teflon	0,3752
A vs. B	Welding rod only vs. welding rod with Teflon	0,0001*
A vs. C	Welding rod only vs. stainless steel with Teflon	0,0001*
A vs. D	Welding rod only vs. stainless steel only	0,0225*
B vs. D	Welding rod with Teflon vs. stainless steel only	0,0002*
C vs. D	Stainless steel with Teflon vs. stainless steel only	0,0001*
*P $\leq$ 0,05		

The calculated p-values for all the comparisons, except for the two coated with Teflon, were less than 0,05, indicating that there was a significant difference between the mean differences of all the outriggers at a 5% level of significance. This meant that a Teflon covering makes a difference in the amount of friction between an outrigger and a fishing line. The p-value for B vs C, the two outriggers coated with Teflon, was 0,3752. Therefore there was no significant difference between the values for these two outriggers at a 5% level of significance.

For friction <u>after</u> the outrigger, the same statistical analysis was used to determine whether there was a difference in the amount of friction displayed by the four different outriggers. The mean of the difference between the starting values and the observed values were calculated for each outrigger system.

The results can be seen in Table 16.

TABLE 16

MEAN OF THE DIFFERENCES IN TENSION SPRING LENGTH FOR THE FOUR DIFFERENT OUTRIGGERS (FRICTION AFTER THE OUTRIGGER)

Outrigger	Mean difference (in mm)
A Welding rod only	10.73
B Welding rod with Teflon paint	1.93
C Spectra-Medic with Teflon paint	3.15
D Spectra-Medic only	8.03

The outrigger with the smallest mean difference displayed the least amount of friction. From Table 16 it can be seen that outrigger B performed best, as the mean difference was the smallest.

To determine whether the differences between the outriggers were significant, the p-values were calculated for the comparisons between the different outriggers. These are shown in Table 17

TABLE 17

P-VALUES FOR EACH COMPARISON (FRICTION AFTER THE OUTRIGGER)

Comparison	Description	P Values
B vs. C	Welding rod with Teflon vs. stainless steel with Teflon	0,2639
A vs. B	Welding rod only vs. welding rod with Teflon	0,0001*
A vs. C	Welding rod only vs. stainless steel with Teflon	0,0001*
A vs. D	Welding rod only vs. stainless steel only	0,0146*
B vs. D	Welding rod with Teflon vs. stainless steel only	0,0001*
C vs. D	Stainless steel with Teflon vs. stainless steel only	0,0001*
*P $\leq$0,05		

The calculated p-values for all the comparisons, except B and C, were extremely small, indicating that there was a highly significant difference on a 5% level between the mean differences of all the outriggers, except B and C. Both B and C were outriggers which had a Teflon coating, therefore, it can be concluded that a Teflon covering makes a difference to the amount of friction between the outrigger and the fishing line. The p-value for B vs C of the two outriggers coated with Teflon, was 0,2639. As this is greater than 0,001, this meant that there was no significant difference between the two outriggers on a 5% level of significance. This confirmed the results of Study 4.

DISCUSSION

Both studies (friction before the outrigger and friction after the outrigger), confirm that there was no significant difference between the friction caused by the Teflon covered welding rod outrigger and that caused by the Teflon covered Spectra-Medic outrigger. The first null hypothesis stated in the beginning of this study (page 70) is therefore accepted, i.e. there is no significant difference in friction between the welding rod outrigger and the Spectra-Medic outrigger, provided they were coated with Teflon paint.

The second null hypothesis was rejected at a 5% level of significance. There was a significant difference in the amount of friction displayed by an outrigger coated with Teflon paint and one without Teflon. The Teflon coated outriggers displayed the least amount of friction.

This study was published in the Journal of Hand Therapy 6: 304 -308, 1993.

4. OTHER DISADVANTAGES/PROBLEMS

One of the problems experienced with the Spectra-Medic outrigger was that the stainless steel rod became loose after the patient had been wearing the splint for a

few days. Somehow it was not possible to tighten the nut sufficiently to prevent this from happening. This was a major disadvantage, as this meant that the angle of pull would not always be correct, making the splint less effective. In some cases, the splint could actually do more harm than good, if the angle of pull was not correct throughout the period that the splint was worn.

Another potential problem with the Spectra-Medic outrigger system was that it is only obtainable from one firm, therefore continued availability cannot be guaranteed. Welding rods are easily obtainable from a variety of sources, eg. directly from the manufacturers, Afrox (Pty) Ltd (see Appendix 1), or from most hardware stores. As the welding rods are used in a large variety of industries, it is very unlikely that welding rods will ever be difficult to obtain in the future.

When the welding rod is used as an outrigger, the clinical area should have a jig with which to bend the notches allowing the fishing line free movement. These jigs will need to be made for each occupational therapy section, which could be a problem due to cost, but once a section possesses a jig, it would be used to make notches in all the outriggers. (See Appendix 2 for detailed drawings).

DISCUSSION

The results of the last study indicate that a coating of Teflon over an outrigger made from either stainless steel or copper coated iron, significantly reduces the friction between the fishing line and the outrigger. However, the Teflon paint should be allowed to dry for ten to 14 days prior to being used as an outrigger. This may be impractical in a clinical situation, but the problem may be overcome if the outriggers are dipped in the paint as soon as they are delivered to the occupational therapy department and only used 14 days later. If the welding-rod outriggers are used, these can also be pre-notched before being dipped in the paint. The distance between the fingers determines the distance between the notches: the larger the hand, the larger the distance between the notches. For a smaller hand, the distance

between the notches needs to be smaller. Outriggers can be pre-notched in three different sizes, ready for the therapist to select the correct one when needed. Since it was found that there was no significant difference in the amount of friction between the fishing line and either of the two types of outriggers, the other aspects which have already been discussed, should also be considered. A summary is seen in Table 18.

TABLE 18

COMPARISON BETWEEN WELDING ROD OUTRIGGER AND THE SPECTRA-MEDIC SYSTEM

Characteristics	Welding Rod	Spectra-medic
Cost	* cheaper	* more expensive
Accuracy of positioning	* difficult if therapist is inexperienced	* easier, due to adjustability
Friction	* same	* same
Disadvantages	* fingers with varying passive range of motion difficult to splint at the same time	* outrigger works
Obtainability	* freely available	* from one firm only
Jig	* necessary	* not necessary
Advantages	* cost effective, * durable and strong	* looks very professional * does not rust

Based upon the above information, neither of the two types of outriggers has a distinct advantage over the other.

The major advantages of the welding rod outrigger are the cost, availability, durability and the shorter time it takes to attach the outrigger to the splint base.

The disadvantages are the difficulty to splint fingers with varying passive range of motion at the same time and the necessity of a jig to make the notches.

Spectra-Medic outriggers are much more expensive, only available from one source and the outrigger works itself loose after a few days. The researcher is of the opinion that these disadvantages outweigh the advantages which are: a professional look, rustproof and easy, accurate positioning.

It is therefore recommended that an outrigger made from a length of 2,5mm copper coated welding rod, dipped in Teflon paint should be used, provided a jig to make the notches is available.

CHAPTER IX

CONCLUSION

Since this study was developmental in nature, the researcher was able to come to three conclusions, namely:

i) rubber bands from the same batch (which are more or less equal in length, thickness and width) do not undergo the same amount of lengthening when identical weights are hung onto them (Study 2B, Chapter IV page 36);

ii) friction between the outrigger and the fishing line significantly influences the amount of force exerted on the finger (Study 3, Chapter V page 48); and

iii) friction between the outrigger and the traction unit is reduced by covering the outrigger with Teflon and using fishing line as part of the traction unit (Study 4, Chapter VI page 55).

These conclusions led to the development of a splint design which took the above findings into account and was still clinicaly effective. Chapter VII (page 61) describes how rubber bands were replaced by tension springs especially manufactured for the research project. A jig was made to bend notches in the welding rod and these notches were coated with Teflon paint. This was intended to ensure that the friction between the welding rod outrigger and the fishing line was kept to a minimum. At the same time still it ensured that the fishing line did not get caught between the outrigger and the thermoplastic stoppers. All that remained was to test this new design in a laboratory situation, before it was used clinically.

However, another type of outrigger system became available in South Africa and this prompted the comparison of these two outrigger systems. To ensure that the final design of the dynamic splint was cost-effective, using materials which were readily available, strong and durable and using a power source which was more consistent and reliable than a rubber band.

Chapter VIII (page 68) describes and compares how two splints using two different

outrigger systems, namely an outrigger made from a piece of copper coated welding rod and one made from a pre-formed piece of stainless steel. From the discussion in Chapter VIII (page 82), it is concluded that the following dorsal dynamic finger extension splint should be used in a clinical setting (See Figure 9):

* a thermoplastic base with velcro attachment straps;
* a pre-notched copper coated welding rod dipped in Teflon paint at least 14 days before use;
* a traction unit made from a stainless steel tension spring with a tension of 3g/mm (see page 61), a piece of nylon fishing line and a finger sling. The use of stainless steel tension springs was also recommended by Rouzaud (1987), and Breger-Lee & Buford (1991).



Figure 9. The final design for the dorsal dynamic finger extension splint.

The above design has a number of advantages:

* It is cost-effective (see page 68).
* The materials are easily obtainable.
* It is strong and durable, provided the outrigger is attached securely and the base is made correctly, with proper regard for mechanical and construction principles. This outrigger is sturdy and can not work itself loose as the

Spectra-Medic system tends to do.

* The friction between the outrigger and the fishing line is negligible and therefore the force exerted on the finger can be determined accurately. This is done by measuring the lengthening of the tension spring with a caliper or ruler. From the force-elongation curve below (Graph 5) it is possible to read off how much force is being exerted on a finger. For example, if the tension spring has lengthened from 50mm to 80mm a force of 250g is exerted on the finger.

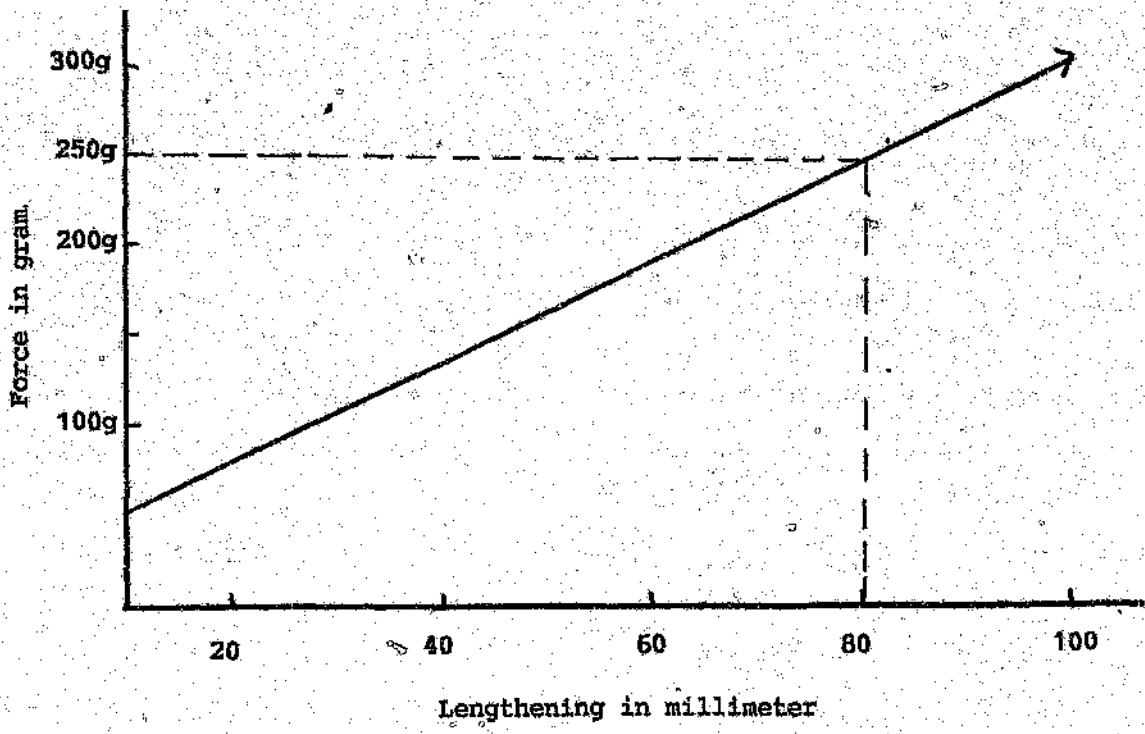

Graph 5. Force-elongation curve for the tension springs

* The notches in the outrigger ensure that the fishing line is accurately placed above the fingers.
* It is cosmetically acceptable.

However, this design has the following disadvantages:

* A jig is needed to form the notches.
* The Teflon paint should be applied at least 14 days prior to use of the outrigger.

* The outrigger is not as easily adjustable in length as the Spectra-Medic system.

The above disadvantages can fairly easily be overcome by:

* Using a jig to form the notches. Detailed sketches of the jig which was developed to form the notches are provided in Appendix 2. An engineering firm should have little difficulty in manufacturing the jig according to the specifications and once a clinical department has such a jig, it should last for many years.
* The Teflon paint should be allowed to dry for 14 days before being used. It is suggested that notches at variable distances should be made in the welding rods in advance. The distances being determined by the size of the hand, the larger the hand, the further apart the notches should be. The welding rods can be pre-notched in three different sizes: small, medium and large and thereafter dipped into the Teflon paint and left to dry until required. This procedure should be fairly easy to implement in an occupational therapy department, especially where occupational therapy assistants are available.
* Difficulty in adjusting the outrigger length. Should the fingers have different passive ranges of motion, it is possible to use single outriggers (i.e. a separate outrigger for each finger) as can be seen in Figure 8.1, page 71.

The researcher feels however, that the splint described above should still be tested clinically to ascertain whether the design is really practical. In some instances when the above designed splint was used, certain patients complained that the tension springs intermeshed and were not easy to separate. This occurence was never documented in the literature and the method by which the springs are attached to the splint may need to be changed. Presently these springs are attached by hooking them onto a paperclip which has been bonded onto the splint base with a piece of splinting material. Possible solutions may be to attach each spring to its own paperclip, or to cover each spring with some form of plastic casing.

What is the value of this research study?

The splint initially used in the occupational therapy deparment was not ideal, i.e. when a patient was wearing the splint, the force exerted on the finger was not known. Therefore, it was not possible to develop scientifically based splinting protocols for different hand conditions. Now splinting protocols could be developed: eg. a force of 300g exerted on a finger with a PIP flexion contracture (30 days post-operatively) for 16 hours per day for a period of 10 days, should improve the contracture.

Different aspects of splint designs were studied in order to develop a splint which minimise the problems experienced in a clinical setting. At the end of Study 6, Chapter VIII (page 82), a new splint design is proposed. Using this splint it is possible to determine fairly accurately how much force is exerted on a finger. Since this information is known, therapists (teachers and clinicians) will be able to do further research and establish scientifically based splinting protocols for different hand conditions. It is the researcher's belief that splinting of the hand and specifically the amount of force applied to a hand should be far more closely related to the stages of healing as described by Strickland (1987) and summarised in Chapter II (page 10). Once the phase of healing has been determined, the correct amount of force can be calculated, using guidelines set out by Strickland (1987), and Brand (1984, 1992).

This will be of extreme value to students and newly qualified occupational therapists, who cannot rely on their experience when they are faced with a difficult splinting choice. Once sound splinting protocols have been developed, patients will benefit, and it will no longer be a hit and miss type of treatment when they are provided with a splint.

Therefore, the contribution this study makes to the field of occupational therapy is that the primary two aims of the study have been achieved.

The first aim was to quantify the force exerted on a finger using a dorsal dynamic finger extension splint. This can now be achieved, provided a force-elongation curve is available for the tension springs which are used on the splint and that friction

between the fishing line and the outrigger is kept to a minimum.

The second aim was to develop a method which would ensure that the amount of force exerted on a finger by the splint is constant and reliable. This study has shown that the amount of force can be constant and reliable, provided tension springs are used in the place of rubber bands.

FURTHER RECOMMENDATIONS

1. It is proposed that the development of specific splinting protocols for different hand conditions form the basis of a future study. Without further work on this aspect, the treatment of patients with hand injuries will not develop.
2. Therapists and students should be encouraged to work with extreme care when splinting a patient's hand and measure the amount of force which is exerted on the fingers. The use of an unknown force may either be harming the patient (if the force is too great) or not be helping (if the force is too small).

LIST OF REFERENCES

1. Bell-Krotoski, J.A., Breger, D.E., Beach, R.B. (1990). Application of biomechanics for evaluation of the Hand. In: Hunter JM, Schneider LH, Mackin EJ, Callahan AD (eds): Rehabilitation of the Hand, 3rd ed. St Louis: C.V. Mosby.
2. Brand, P.W. (1984). The forces of dynamic Splinting: ten questions before applying a dynamic splint to the hand. In: Hunter JM, Schneider LH, Mackin EJ, Callahan AD (eds): Rehabilitation of the Hand, 2nd ed. St Louis: C.V. Mosby.
3. Brand, P.W. (1985). Clinical Mechanics of the Hand St. Louis: C.V. Mosby.
4. Brand, P.W., Hollister, A. (1993). Clinical Mechanics of the Hand, 2nd Ed. St Louis: Mosby Yearbook.
5. Breger-Lee, D.E., Buford, W.L. (1991). Update in Splinting materials and methods. Hand Clinics 7: 569-585.
6. Colditz, J.C. (1983). Low profile dynamic splinting of the injured hand. Am J Occup Ther 37: 182.
7. Fess, E.E. (1984). Principles and methods of splinting for mobilisation of joints. In: Hunter JM, Schneider LH, Mackin EJ, Callahan AD (eds): Rehabilitation of the Hand. 2nd ed. St Louis: C.V. Mosby.
8. Fess, E.E., Philips, C.A. (1987). Hand splinting: Principles and methods. 2nd ed. St Louis: C.V. Mosby.
9. Gyovai, J.E., Wright Howell, J. (1992). Validation of spring forces applied in dynamic outrigger splinting. J Hand Ther 5: 8-15.
10. Hunter, J.M., Schneider, L.H., Mackin, E.J., Callahan, A.D. (eds). 1984. Rehabilitation of the Hand, 2nd ed. St Louis: C.V. Mosby.
11. Malick, M.H. (1978). Manual on dynamic hand splinting with thermoplastic materials. Pittsburgh: Harmarville Rehabilitation Centre.
12. May, E.J., Silfverskiold, K.L. (1989). A New Power Source in dynamic splinting: Experimental Studies. J Hand Ther 2: 164-168.

13. Mildenberger, L.A., Amadio, P.C., An, K.N. (1986). Dynamic Splinting: a systematic approach to the selection of elastic traction. Arch Phys Med Rehab 67: 241-244.

14. Neter, J., Wasserman, W. (1974). Applied linear Statistical Models. Homewood: Richard D Irwin Inc.

15. Roberson, L., Breger, D., Buford, W.L., Freeman, M.J. (1988). Analysis of the Physical properties of SCOMAC springs and their potential use in dynamic splinting. J Hand Ther 1: 110-114.

16. Rouzaud, J.C., Allieu, Y. (1987). A dynamic aid in hand splints adjusted by means of a calibrated spiral spring. Orthèse de la Main 6: 255-259.

17. Strickland, J.W. (1987). Biologic basis for hand splinting. In: Fess EE, Phil CA: Hand Splinting: Principles and Methods 2nd ed. St Louis: C.V. Mosby.

18. Weeks, P.M., Wray, R.C. (1973). The management of acute hand injuries: a biological approach. St Louis: C.V. Mosby.

APPENDIX 1

Names and addresses of suppliers:

1. Waltons Stationery Company
   PO Box 2180
   Pretoria
   0001
   Tel: 325-4330
   Fax: 326-7539

2. Starko Springs
   PO Box 57048
   Booysens
   2016
   Tel: (011) 493-6558

3. Spectra-Medic
   PO Box 58
   Morningside
   2057
   Tel: (011) 883-6873
   Fax: (011) 783-0843

4. Afrox SA
   PO Box 1063
   Pretoria
   0001
   Tel: (012) 386-7122
   Fax: (012) 386-9471

5. Since the Graffitex paint used in the research was no longer available, a substitute paint was located with the same qualities, namely Henro 77 manufactued by:

   Myco Chemicals
   PO Box 12138
   Daggafontein
   1573
   Tel: (011) 363-2135
   Fax: (011) 363-1024

APPENDIX 2

Technical drawing of jig to form notches (all views).

Jig

Base

Guide block

End plate

Jack screw

Pusher

Spacer

Pin (4)

Handle

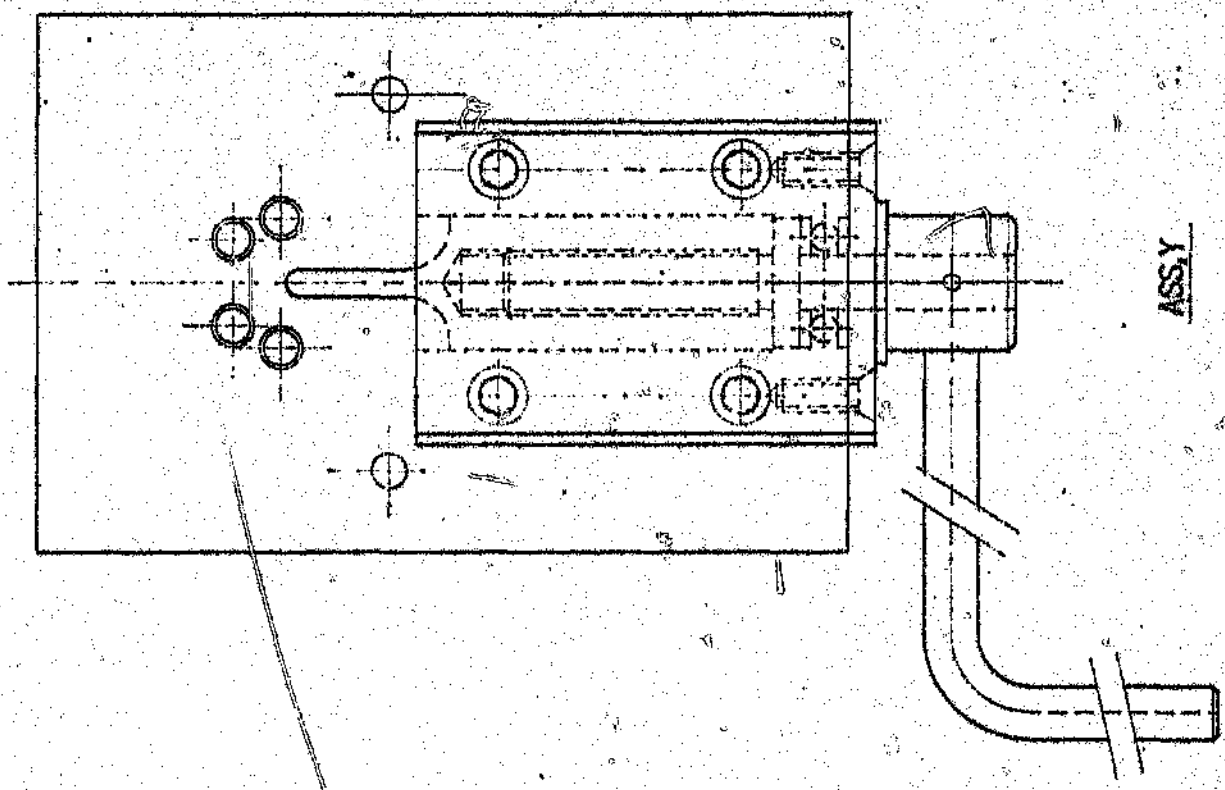
ASS'Y

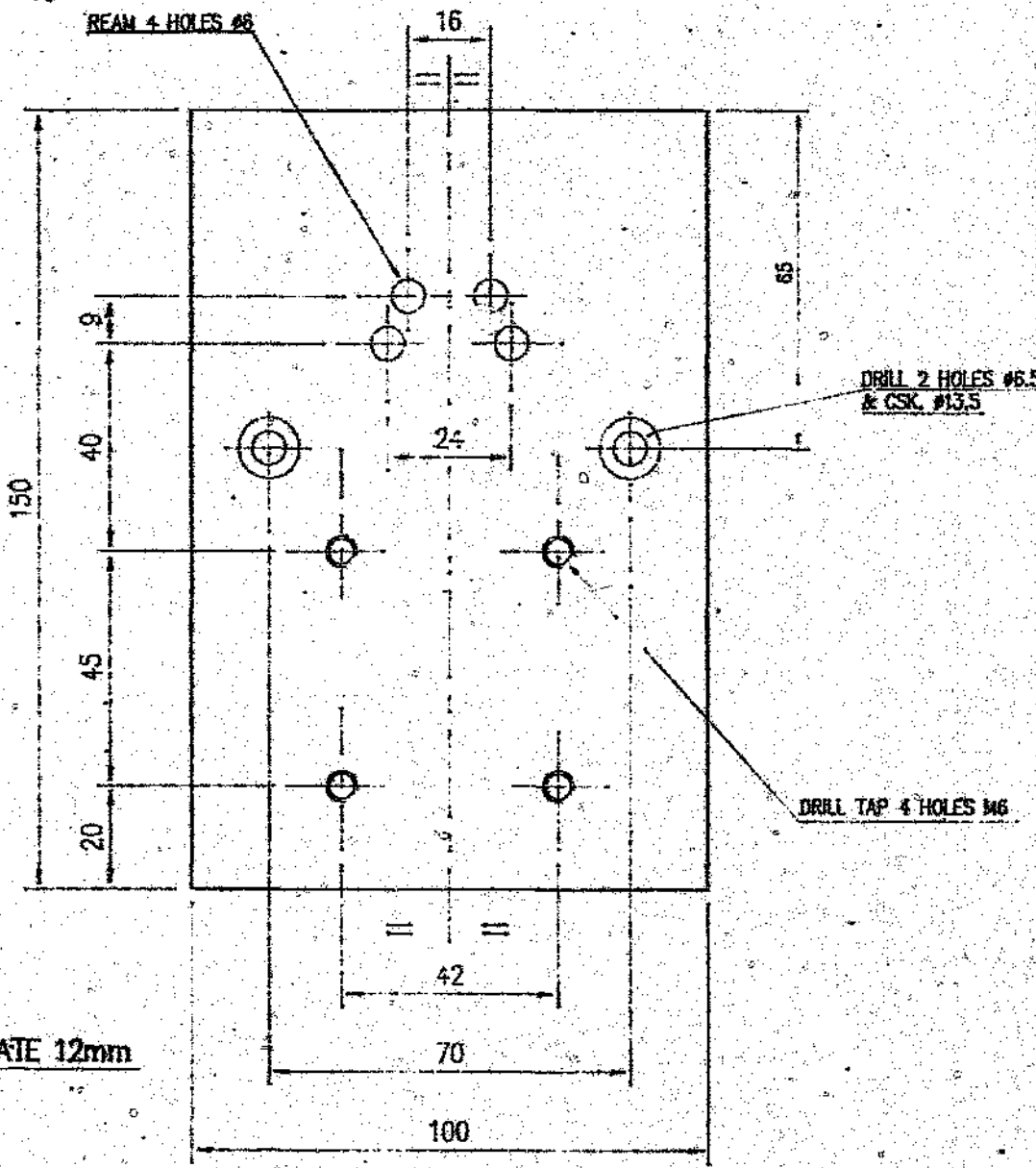

BASE

MAT,L: MILD STEEL PLATE 12mm

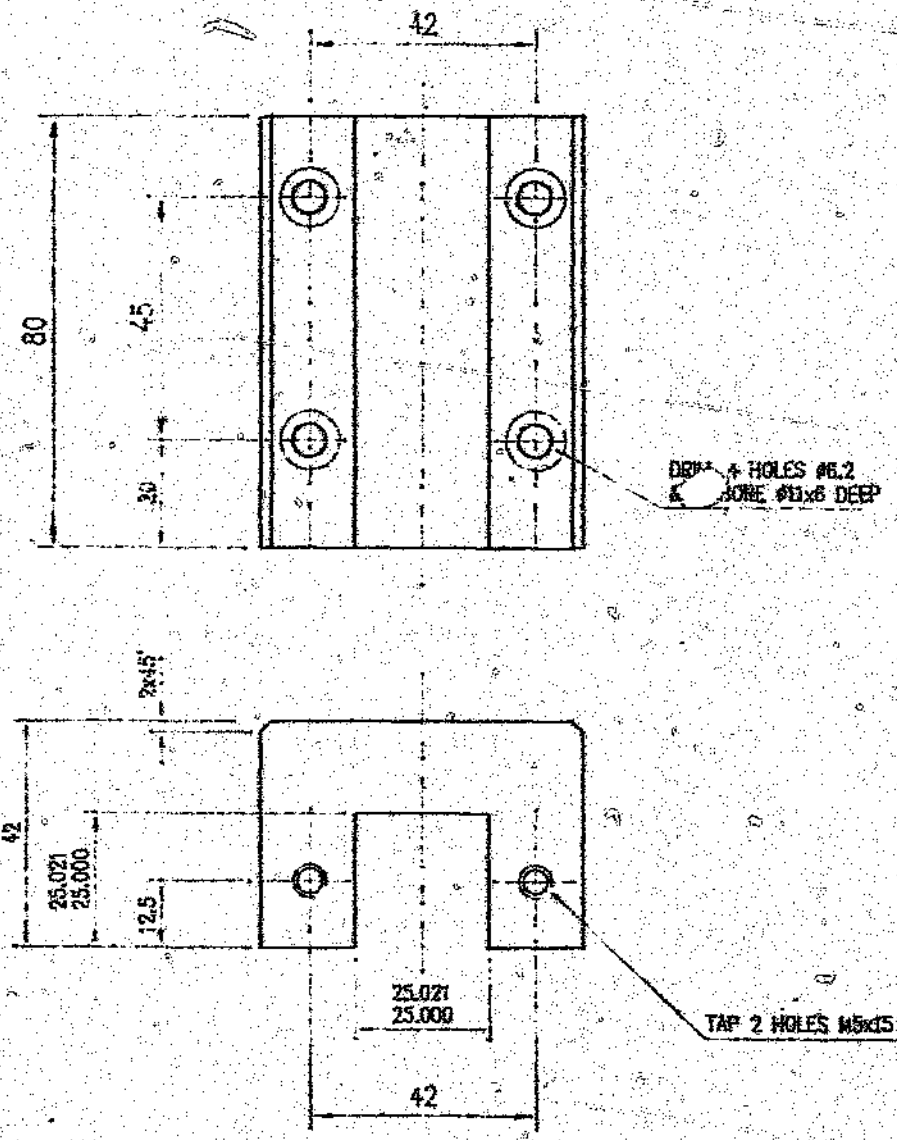

GUIDE BLOCK

MAT,L: MILD STEEL

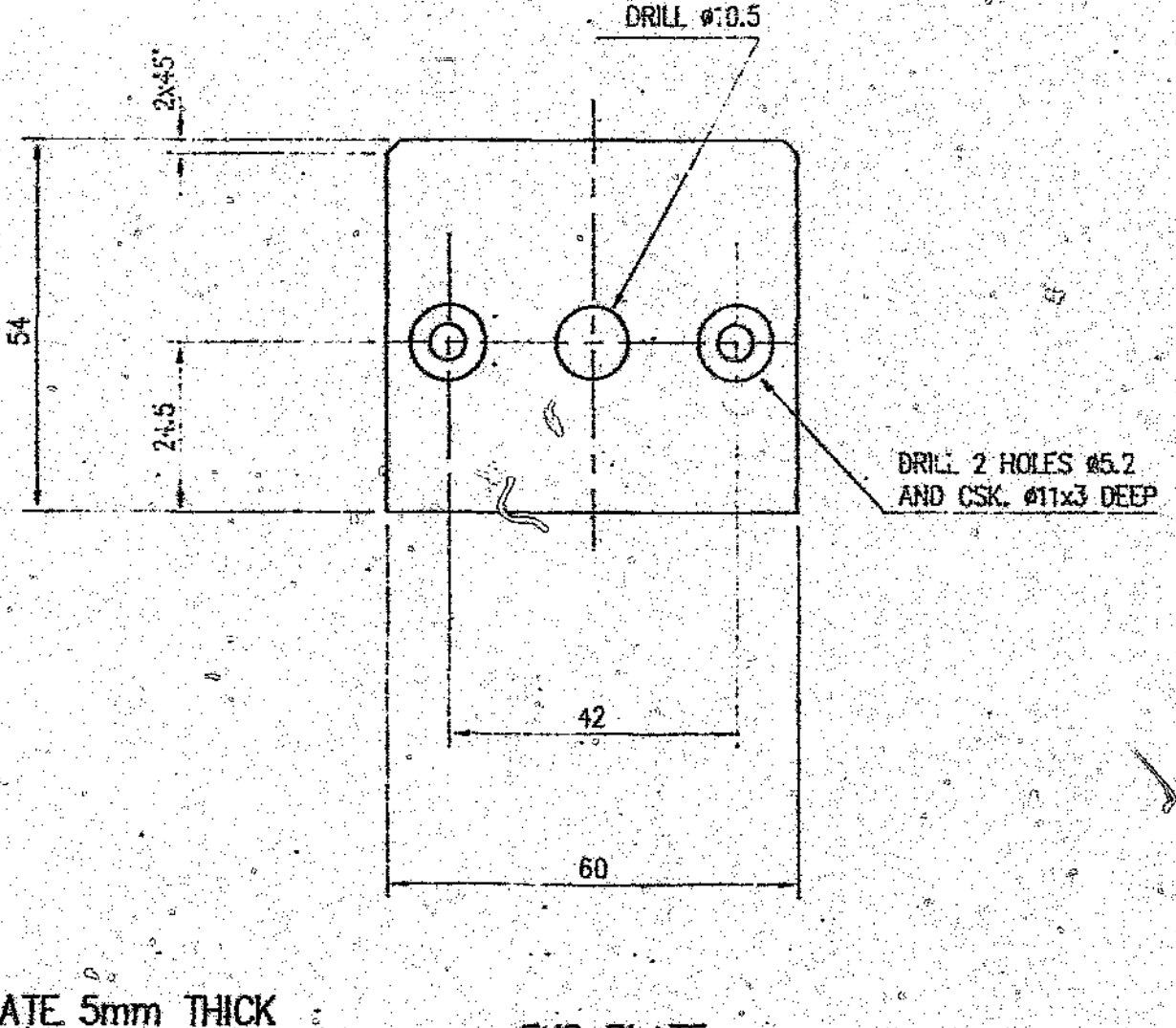

MAT'L: MILD STEEL PLATE 5mm THICK

END PLATE

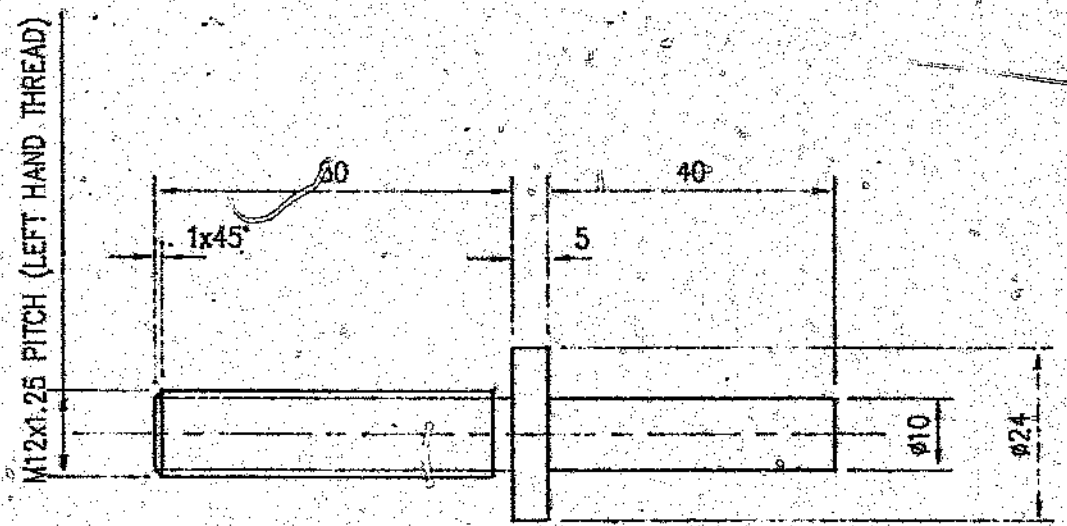

JACK SCREW

MAT,L: SILVER STEEL
50–54 HRC

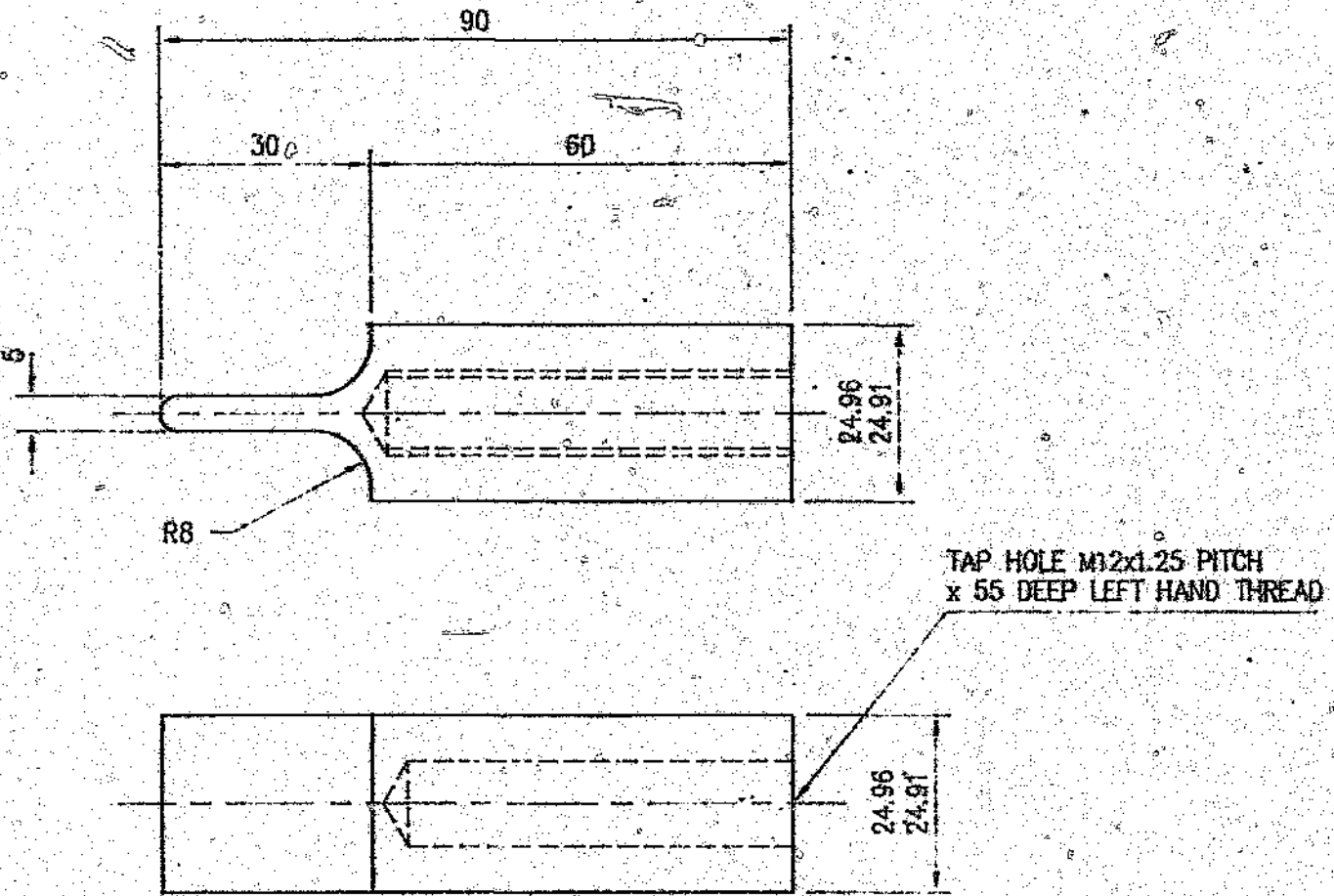

PUSHER

MAT,L: EN30B (54–58 HRC.)

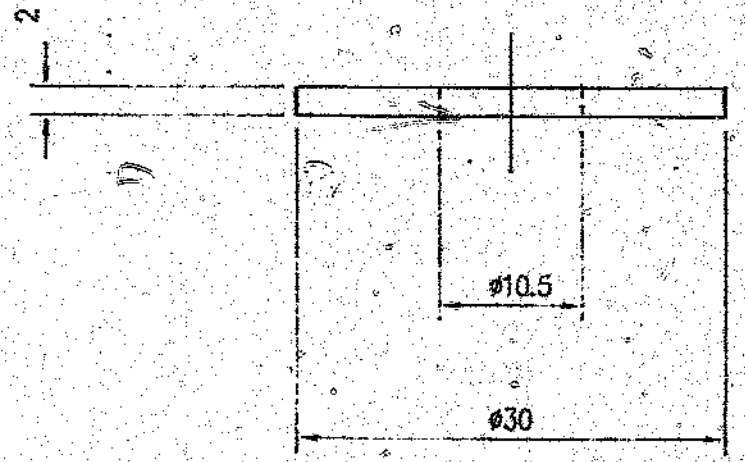

SPACER

MAT,L: BRASS

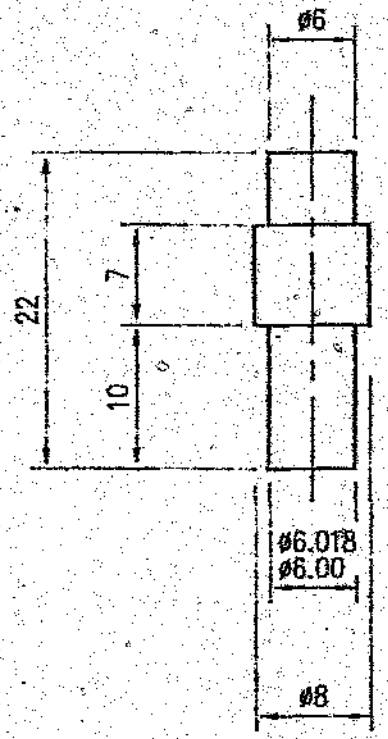

PIN 4 OFF

MAT,L: SILVER STEEL
50–54 HRC

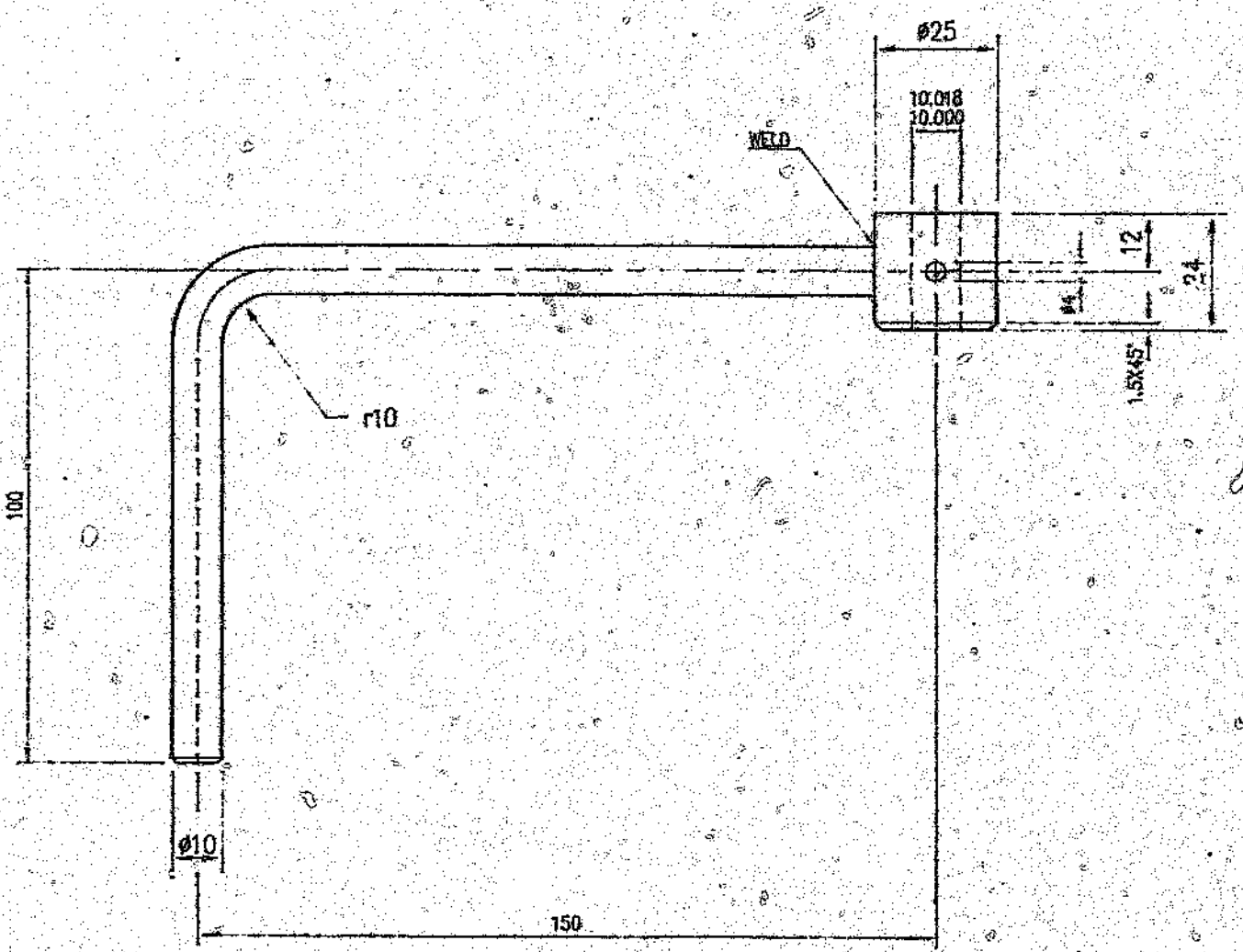

HANDLE

MAT,L: MILD STEEL (ROUND BAR)

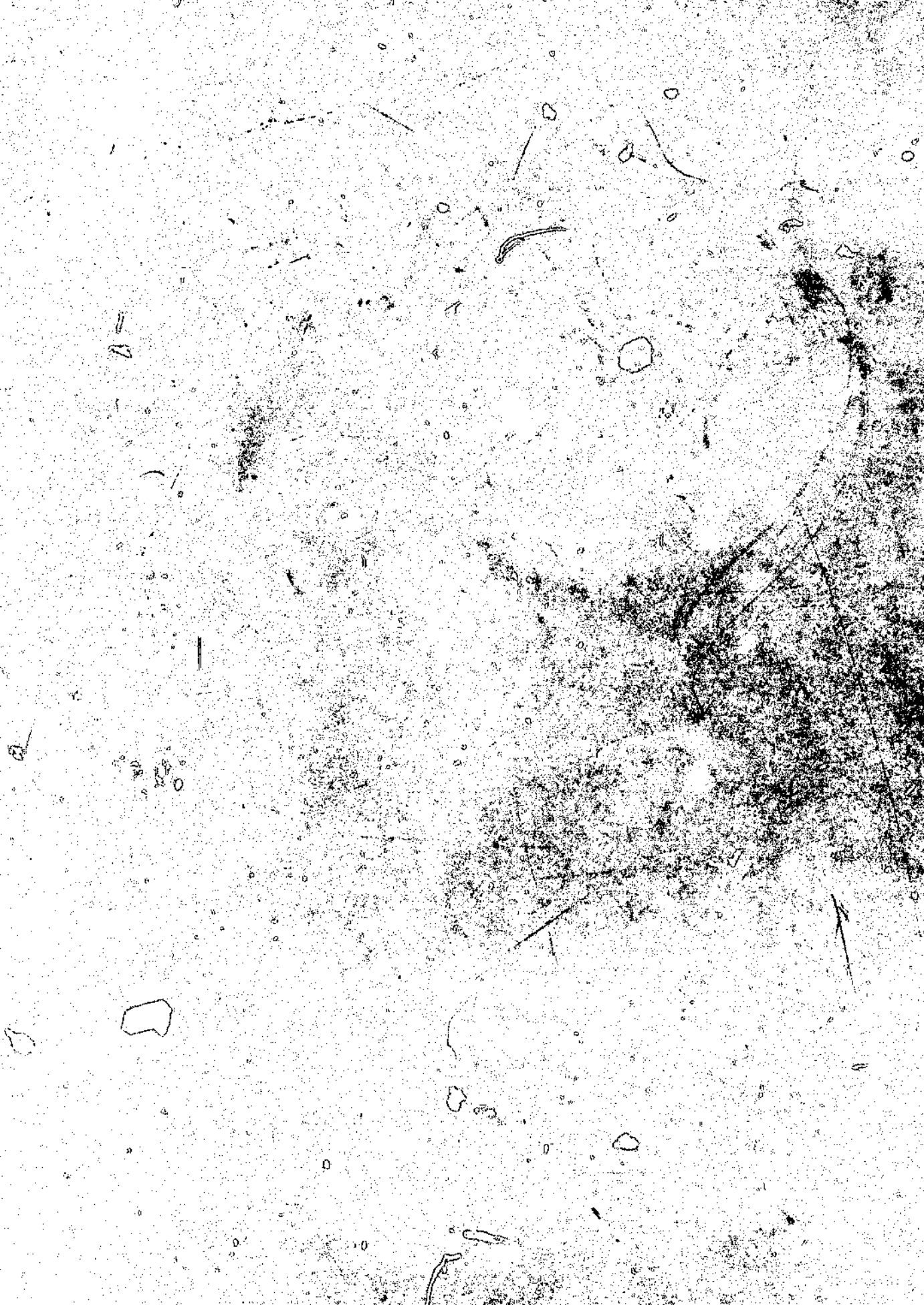

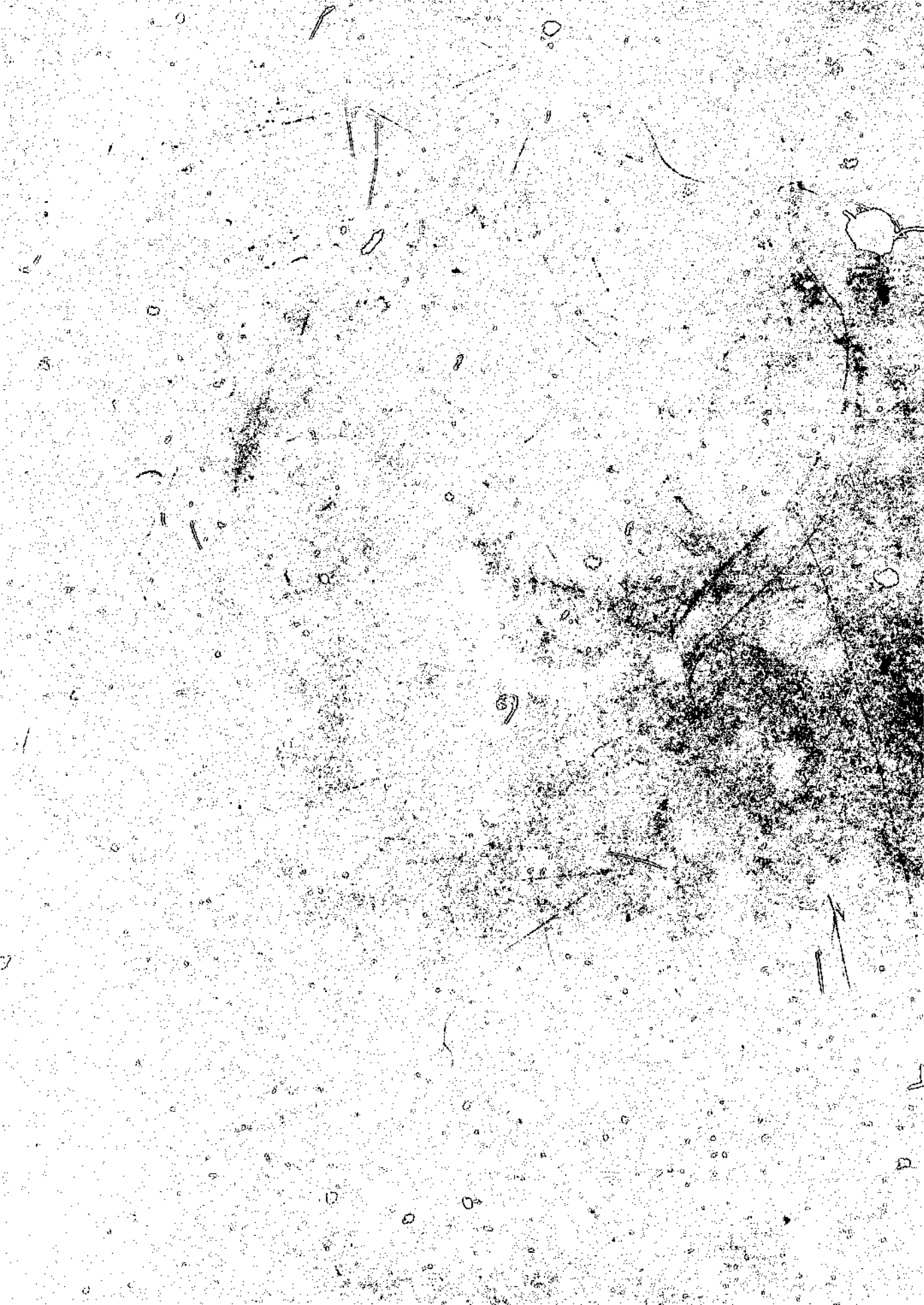

Author:Van Velze CA
Name of thesis:Problems experienced with low-profile dynamic splints

PUBLISHER:
University of the Witwatersrand, Johannesburg
©2015

LEGALNOTICES:

Copyright Notice: All materials on the University of the Witwatersrand, Johannesburg Library website are protected by South African copyright law and may not be distributed, transmitted, displayed or otherwise published in any format, without the prior written permission of the copyright owner.

Disclaimer and Terms of Use: Provided that you maintain all copyright and other notices contained therein, you may download material (one machine readable copy and one print copy per page)for your personal and/or educational non-commercial use only.

The University of the Witwatersrand, Johannesburg, is not responsible for any errors or omissions and excludes any and all liability for any errors in or omissions from the information on the Library website.