

https://dspace.org/

Customer experience, satisfaction and loyalty at South African hair salons and spas

Lemena, Boitumelo

2023
University of the Witwatersrand, Johannesburg
https://hdl.handle.net/10539/43924
Lemena, Boitumelo. (2024). Customer experience, satisfaction and loyalty at South African hair salons and spas [Master's dissertation, University of the Witwatersrand, Johannesburg]. WireDSpace.https://hdl.handle.net/10539/43924

Downloaded from a DSpace repository. https://dspace.org/

Customer experience, satisfaction and loyalty at South African hair salons and spas

Boitumelo Lemena

A research report submitted to the Faculty of Commerce, Law and Management, University of the Witwatersrand, in partial fulfilment of the requirements for the degree of Master of Management in the field of Strategic Marketing

Johannesburg, 2023

ABSTRACT

In today's highly competitive marketing landscape, the importance of customer experience has become increasingly pressing for businesses globally. To succeed in the service industry, companies must strategically manage the factors that impact customer experience. Hair salon and spa owners face the challenge of understanding the effects of customer experience, satisfaction, and loyalty and how these concepts affect their business growth. Previous research has identified discrepancies in the relationship between customer experience, satisfaction, and loyalty. Management of these elements gives businesses a competitive edge, differentiation, and overall success.

A paucity of research analyses the influence of customer experience on satisfaction and loyalty within the beauty industry from a customer standpoint. This research endeavours to appraise the significance of customer experience on satisfaction and loyalty in South African hair salons and spas as customers perceive.

The present study used a quantitative methodology, employing a survey strategy to gather data from individuals aged between 18 and 45 years residing in the Gauteng province. 347 responses were collected using an online questionnaire and analysed using Statistical Package for Social Sciences (SPSS) and AMOS software to draw conclusive results.

The data indicates that a strong and positive correlation exists between customer experience and satisfaction, and that satisfaction positively impacts loyalty. No significant variations in perception of experience, satisfaction, and loyalty were found among customers based on gender or years of experience.

Hair salon and spa owners can significantly impact customer perception by recruiting skilled beauticians, effectively managing time, and upholding the necessary standards for the servicescape to deliver the required services. The manipulation of elements that influence the customer experience can lead to increased satisfaction, which in turn can foster loyalty to hair salons and spas.

Keywords: Servicescape, Customer experience, Customer loyalty, Customer satisfaction, perceived price

DECLARATION

I, _____Boitumelo Lemena_____, declare that this research report is my work except as indicated in the references and acknowledgements. It is submitted in partial fulfilment of the requirements for the degree of Master of Management in the field of Strategic Marketing at the University of the Witwatersrand, Johannesburg. It has not been submitted before for any degree or examination in this or any other university.

Name: Boitumelo Lemena Signature: B. Lemena

Signed at ……Midrand……

On the ……5th…….. day of ……November…… 2023….

DEDICATION

This dissertation is respectfully dedicated to the individuals whom I hold dear; my cherished son, my dearest younger brother, and all my admired cousins who look up to me for inspiration. It is my ardent hope that this undertaking serves as a source of motivation for academic excellence and embodies the conviction that all goals are attainable through diligent pursuit and devotion to one's aspirations. I entreat you all to nurture the spirit of dreaming big and to persevere in the pursuit of your dreams.

ACKNOWLEDGEMENTS

I extend my sincerest gratitude to my supervisor, Mr. Neale Penman, for his guidance and motivation throughout this project. I acknowledge the support and sacrifices you have made to assist me, and I appreciate your invaluable contributions. I share your pride in this report and hope that it will be well received.

I am extremely grateful to my revered mother, Francina Khasebe, for her unwavering support throughout my academic pursuits. I express my heartfelt appreciation for her dedication, as she has served as my steadfast rock and my biggest cheerleader. I am confident that I would not have accomplished this without her constant presence, ready to alleviate my burdens and stress. May the Almighty bless her kind and beautiful heart.

I must express my heartfelt gratitude to PJB Learning Academy, my sponsor, for their financial support towards my education. I am also deeply thankful to the members of the selection committee who recognized my potential and believed in me, thus making my lifelong dream a reality.

I would like to express my sincerest gratitude to my esteemed friends, colleagues, and all those who kindly undertook to fill out my questionnaire. Your efforts have made the completion of this project a reality.

TABLE OF CONTENTS

LIST OF TABLES……..xi

LIST OF FIGURES……...xii

CHAPTER 1: INTRODUCTION……1

1.1 Statement of purpose ……1

1.2 Background of the study ……2

1.2.1 Customer experience concept ……...2

1.2.2 The beauty industry ……4

1.2.3 SERVQUAL ……...7

1.3 Research problem……...8

1.4 Research aim ……9

1.5 Research objectives ……10

1.6 Significance of the study……..10

1.7 Research contribution ……..11

1.8 Study limitations ……11

1.9 Definition of terms……..……..12

1.10 Assumptions ……..13

1.11 Chapter outline ……..13

CHAPTER 2: LITERATURE REVIEW AND THEORETICAL FRAMEWORK……...15

2.1 Introduction ……15

2.2 Concept of marketing……..15

2.2.1 Service marketing……..……..15

2.2.2 Product service continuum……..……..16

2.2.3 Products in high search attributes vs products in high credence attributes……..……16

2.3 Theoretical framework……..16

2.3.1 Service dominant logic ……..16

2.3.2 The service context ……...17

2.4 Conceptual framework and hypothesis development ……19

2.4.1 Customer experience ……..19

2.4.2 Servicescape ……..20

2.4.3 Staff expertise ……22

2.4.4 Speed of service ……23

2.4.5 Customer satisfaction ……....24

2.4.6 Perceived price ……...26

2.4.7 Customer loyalty ……28

2.4.8 Novice and experienced customers ……....30

2.4.9 Gender ……31

2.5 Conclusion of literature review…….....39

CHAPTER 3: RESEARCH METHODOLOGY……40

3.1 Introduction……....40

3.2 Research approach ……..40

3.3 Research design……...41

3.4 Population and sampling methods……42

3.4.1 Population ……...42

3.4.2 Sampling method ……...42

3.5 Data collection method ……43

3.6 Measuring instrument……...44

3.7 Data analysis methods……45

3.7.1 Descriptive statistics ……..46

3.7.1.1 Frequencies ……46

3.7.1.2 Custom tables, means, and standard deviations……46

3.7.2 Validity and reliability ……47

3.7.2.1 Construct validity……..……47

3.7.2.2 Confirmatory factor analysis……...……47

3.7.2.3 Reliability analysis……48

3.7.3 Inferential statistics ……....48

3.7.3.1 Independent T-test……..…..……48
3.7.3.2 One-way ANOVA……..……...……49
3.7.3.3 Correlational analysis……..……49
3.7.3.4 Structural equation modelling……..……49
3.8 Ethical considerations ……..49
3.9 Conclusion of research methodology ……50
CHAPTER 4: RESEARCH RESULTS……..51
4.1 Introduction ……51
4.2 Data screening ……..51
4.3 Sample characteristics ……51
4.3.1 Age ……...51
4.3.2 Gender ……52
4.3.3 Service provider visited ……53
4.3.4 Frequency of visiting service provider ……....53
4.3.5 Frequency of visit by service provider visited ……54
4.3.6 Spend in the last six months ……...54
4.4 Descriptive statistics ……55
4.5 Validity ……60
4.5.1 Pruned model ……63
4.6 Hypothesis testing……67
4.7 Summary of the results ……74
CHAPTER 5: DISCUSSION……...75
5.1 Introduction ……75
5.2 Discussion on hypothesis results ……...75
5.3 Conclusion of discussion ……81
CHAPTER 6: CONCLUSION & RECOMMENDATIONS ……..82
6.1 Introduction ……82
6.2 Summary of results……...82

6.2.1 The impact of staff expertise, speed of service and servicescape on customer experience……...…...83
6.2.2 The impact of customer experience on satisfaction ……....85
6.2.3 The impact of perceived price on customer satisfaction……...85
6.2.4 The impact of customer satisfaction on loyalty……...86
6.3 Recommendation on factors that influence customer experience……86
6.3.1 Staff expertise and customer experience……....87
6.3.2 Speed of service and customer experience……..……..87
6.3.3 Sevicescape and customer experience……..……88
6.4 Recommendation on factors that influence customer satisfaction……89
6.4.1 Customer experience and satisfaction.……...……89
6.4.2 Perceived price and satisfaction.……..91
6.5 Recommendation on factors that influence customer loyalty……92
6.5.1 Customer satisfaction and loyalty..……92
6.6 Suggestions for future research ……93
6.6.1 Expanding on the limitations and replicating the study in different contexts……...94
6.6.2 Exploring servicescape influence on customer experience……..95
6.6.3 Improving discriminant validity of other constructs…….……96
REFERENCE LIST ……97
APPENDIX A: CONSISTENCY TABLE……107
APPENDIX B: RESEARCH INSTRUMENT……..……....109

LIST OF TABLES

Table 1: Hypothesis development 33

Table 2: Literature on customer experience, satisfaction, and loyalty 37

Table 3: Sample description 43

Table 4: Rating scale 45

Table 5: Methodology terms 45

Table 6: Servicescape 55

Table 7: Staff expertise 56

Table 8: Speed of service 56

Table 9: Customer experience 57

Table 10: Customer satisfaction 58

Table 11: Perceived price 58

Table 12: Customer loyalty 59

Table 13: Items that had a scale reverse 60

Table 14: Items eliminated during CFA 62

Table 15: Final CFA results - construct composition 64

Table 16: Construct reliability and validity 66

Table 17: Descriptive statistics and Fornell-Larcker criterion correlations 66

Table 18: Model fit indices 67

Table 19: SEM model - Standardised regression weights 69

Table 20: Servicescape and customer experience across genders and service providers 70

Table 21: Customer experience, satisfaction and loyalty between novices and experienced customer 73

Table 22: Perception of experience, satisfaction, and loyalty perception across gender 74

LIST OF FIGURES

Figure 1: SERVQUAL and new measures of customer experience 8

Figure 2: Conceptual framework. 33

Figure 3: Age group analysis..... 52

Figure 4: Gender analysis 52

Figure 5: Service provider visited in the past six months..... 53

Figure 6: Frequency of visiting service provider 53

Figure 7: Frequency of visit by service provider visited 54

Figure 8: Spend in the last six months 54

Figure 9: Hypothesised model..... 61

Figure 10: Pruned CFA model..... 63

Figure 11: SEM model..... 68

CHAPTER 1: INTRODUCTION

1.1 Statement of purpose

This study examines customer experience, satisfaction, and loyalty at South African hair salons and spas. Customer experience, satisfaction and loyalty are crucial for companies operating in a highly competitive market. These elements can help differentiate businesses, drive growth, and ensure sustainability.

The positive impact of customer loyalty on a company's market and economic performance is widely recognized (Saneva & Chortoseva, 2020). The financial value of the customer experience and loyalty to a business cannot be overlooked, and businesses must understand how to use elements that impact customer experience as marketing tactics and sustainable growth strategies. Customer experience is critical to the success of service providers, and measuring customer experience in organizations can improve customer experience and increase the likelihood of survival (Gao, Melero-Polo, & Sese, 2020; Mornay & Leon, 2012).

Recent research has investigated the relationship between customer experience, satisfaction and loyalty in various contexts including banking (Gao et al., 2020), tourism (Cetin, 2020), fast-food restaurants (Saneva & Chortoseva, 2020) and freight services (Risnawati, Sumarga, & Purwanto, 2019). Although a relationship has been established between these factors in the service industry, the lack of a common understanding of customer experience remains a significant problem for many business owners (Becker & Jaakkola, 2020).

The main purpose of this study is to investigate the effects of customer experience on satisfaction and loyalty in South African hair salons and spas.

The first chapter of this study will discuss the background of customer experience, the beauty industry and the SERVQUAL model. The research problem, research aim and research objectives will be discussed thereafter. The next part will outline the

significance of the study, research contributions, research limitations, definition of terms and assumptions. The chapter outline will conclude the first chapter.

1.2 Background of the study

1.2.1 Customer experience concept

Customer experience is a perception of experience from a series of interactions between a customer and the provider during service delivery (Bolton et al., 2018). Pekovic and Rolland (2020) defined customer experience from a multidimensional perspective that considers customer demographics, technology, physical, social, and cognitive dimensions to fit different contexts. They describe customer experience as a series of interactions between a customer and a company that elicits reactions that depend solely on the level of customer involvement in service delivery.

From a service perspective, customers are viewed as active participants in value creation (Greer, Lusch, & Vargo, 2016). This perspective acknowledges that customers not only receive a service but also play an active role in creating the value expected. The level of impact customers have on their service experience is directly related to their level of involvement and participation in service delivery. As the primary engagement channel, service staff are equally important in value creation, as their expertise and ability to deliver superior experiences are pivotal to enhancing customer service and the overall success of the business (Lynch, Hofmeyr, & Price, 2018).

The customer experience is shaped by the perception of physical and emotional interactions with a service provider, using the five senses of touch, smell, taste, hearing, and sight. Companies place importance on the design of their service space to create unique and memorable experiences for customers. A conscious design of space can enhance the customer experience based on how customers perceive the service environment (Vilnai-Yavetz & Gilboa, 2010).

From a strategic perspective, businesses aiming for a competitive edge and growth should incorporate customer experience into their marketing and service design

efforts. Developing a positive customer experience is a key goal for businesses striving to secure customer loyalty through emotional connections (Lemon & Verhoef, 2016). To achieve this, companies must manage customer emotions with the same level of attention as they do with their products and services (Berry, Carbone, & Haeckel, 2002).

The significance of understanding how customers perceive and experience a service cannot be overstated (Mokhlis, 2012). A comprehension of how customers evaluate service experiences is crucial for delivering quality services to customers (Chang & Horng, 2010). The knowledge of customer experience, from customer expectations to assessment, lies in understanding the entire customer journey (Bolton et al., 2018). The success of any business depends on how customers perceive its offerings, as customer perceptions can either make or break a business. Reviews offer important information about a product or service that can influence purchasing decisions (Y.-J. Kim & Kim, 2022). For example, company reviews can influence potential customers to purchase the service or stay away if the review is negative.

Scholars have extensively investigated the relationship between customer experience and customer satisfaction in the past (Gao et al., 2020; Garg, Rahman, & Qureshi, 2014; Mornay & Leon, 2012). Customer satisfaction is the level of fulfilment that customers experience through their interactions with a company (Keiningham et al., 2017) and a precursor to customer loyalty (Jammine, Eresia-Eke, & Locke, 2019; Manyanga, Makanyeza, & Muranda, 2022). Customer loyalty is when customers consciously choose to support the brand, regardless of competitors' efforts to win them over. According to Chingang Nde and Lukong (2010), high-quality services result in loyalty and retention. Loyal customers repeatedly purchase from the same service provider and recommend that their peers do the same. Loyalty is the goal of any company as it leads to increased market share and profitability. Companies that aim for customer loyalty and commitment must provide a satisfactory experience to their customers or a channel that allows for customer feedback on their experiences to manage service recovery.

1.2.2 The beauty industry

The global beauty industry has experienced significant growth, particularly in developing countries, and is driven by factors such as rising consumer income, the importance of self-image, and increased media advertising (Łopaciuk & Łoboda, 2013; Mendoza, Zambrano, & Rueda, 2020; Rambe & Mpiti, 2017). Furthermore, the industry is expanding in various directions, including gender, location, surgery, and race. For example, the men's grooming market has also experienced a surge in popularity, with metrosexual men becoming increasingly interested in their appearance and overall well-being (Black & Sharma, 2001; Guo, 2011). A metrosexual is a man who is concerned about and invests money and time in his aesthetics, such as his look, weight, height, and fashion sense (Blanchin Audrey & Levert, 2007). The South African beauty industry is valued at US$3.85b in 2023 and is expected to grow by 3.94% annually (Statista, 2023). However, the rapid growth of the industry has led to intense competition due to the variety of service offerings and complex customer preferences, as well as the abundance of substitutes from competitors. Moreover, the high level of unemployment in South Africa exacerbates the situation by allowing many individuals to enter the market as service providers.

For many years, the beauty industry has been dominated by a Western definition of beauty, which is often associated with whiteness (Akinro & Mbunyuza-Memani, 2019). However, this notion is gradually changing, as more black and natural women are increasingly represented in the industry, including in beauty pageants. For example, in South Africa, black women have won the Miss South Africa pageant for four consecutive years, and Zozibini Tunzi, who competed with natural hair, won Miss Universe 2019. These developments reflect a broader shift towards inclusivity and diversity in the beauty industry. A more diverse range of individuals must contribute their perspectives on the definition of beauty, to shift the prevailing narrative away from the narrow and exclusive standard of white beauty. This will not only promote a more inclusive and equitable societal framework but will also celebrate the rich and varied expressions of beauty that exist within the African community.

There is no universally accepted standard of beauty, and it can vary based on cultural, religious, geographical, gender, societal, and trend-related perspectives (Frederick, Forbes, Jenkins, Reynolds, & Walters, 2015). This is supported by Motseki and Oyedemi (2017), who noted that South African celebrities consider fair skin, thin body frames, and weaves to be the embodiment of beauty. This is evident in the social media pages of celebrities, where they often use skin-lightening creams, have hair extensions, and wear tight clothing or swimwear to showcase their thin bodies. This being said, this study adopts a superficial beauty ideology, as services designed to improve superficial beauty, such as hairstyling and spa treatments, can be purchased from hair salons and spas.

Furthermore, beauty is often associated with social power and can operate as a form of capital (Pryor & Yin, 2012). People with physical attractiveness are often able to leverage their looks to generate income through influencer marketing. Celebrities, especially those who are considered influential, use their bodies as material accessories to sway the opinions of their "friends" and "followers" on social media platforms, shaping their ideologies of beauty (Motseki & Oyedemi, 2017). This can include showcasing their hair extensions, nail art, massages, and facial treatments, portraying a "soft life" to influence those who aspire to this ideal.

In the realm of beauty, establishments that offer services such as grooming, pampering, and other beauty treatments are highly diverse and varied (Black & Sharma, 2001). This study specifically focuses on hair salons and spas as these are the types of establishments that provide beauty services to customers. A hair salon is a beauty establishment that offers services such as hairdressing to enhance beauty for both males and females (Raza & Almashaqbeh, 2021). According to Faidah, Rusmanto, Rahmawati, Kusstianti, and Wijayanti (2021), a spa is an establishment that offers services such as facials, hair treatments, and body care.

Hair salons and spas are often classified as Small, Micro Medium Enterprises (SMMEs) due to the small size of the business (Rambe, Mpiti, & Khaola, 2022). The authors further define a small business as a business entity that is managed by one person, which is the case for hair salons and spas. These enterprises are typically

cheap to set up and maintain hence there is a lot of them competing for a share of the customer's wallet. Microenterprises play a crucial role in economic growth by providing entrepreneurs with opportunities for success (Zietsman, Mostert, & Svensson, 2018). According to Nokuthula and Tavonga (2020), SMMEs are vital for alleviating poverty through job creation.

The high failure rate among these establishments is a cause for concern. Many of these failures can be attributed to the lack of business knowledge, particularly in the area of relationship marketing, among the owners (Okyere & Amoakoh; Perks & Austin, 2013). This being said, there is a pressing need for effective customer experience management within these establishments to ensure their sustainable growth and profitability. The importance of effective relationship marketing in the success and sustainability of these businesses cannot be overstated (Jammine et al., 2019).

Transactional relationships can provide a source of revenue, but they will not necessarily lead to sustainable growth as customers may be able to find similar services at a lower price elsewhere. Poor management skills and a lack of finances are also significant contributors to business failure (Perks & Austin, 2013). When managers of these establishments are unable to focus on strategic thinking and planning for business growth, it can have a detrimental impact on the long-term success of the business.

In the beauty industry, customer experience, satisfaction and loyalty are critical components for achieving success. Hair salons and spas should focus on delivering unique experiences to customers while receiving a service. These service providers must understand and manage the elements that impact customer experience, such as clean and well-maintained facilities, a relaxing atmosphere, and excellent customer service, to create unforgettable experiences for customers. If a service provider surpasses customers' expectations by offering more than what competitors provide, customers are likely to be satisfied. Differentiation can be achieved through skilled and friendly staff, and personalized and high-quality services at every interaction. The ultimate objective of beauty establishments is to create customer loyalty by providing

exceptional customer experience and satisfactory services, leading to repeat purchases. Customers are likely to return if they have a great experience and overall quality service.

Despite the significance of the beauty industry, marketing scholars have invested little in developing the literature on beauty as a marketing concept (Pryor & Yin, 2012). Some authors argue that there is a need to explore aesthetics in the beauty industry, such as how service spaces look for consumers (Falkof, 2022). The arrangement of physical elements is crucial in a service environment because it facilitates service and enhances experience.

1.2.3 SERVQUAL

A relationship exists between service quality and customer satisfaction using the SERQUAL model (Zygiaris, Hameed, Ayidh Alsubaie, & Ur Rehman, 2022). SERVQUAL is a widely recognized scale utilized to evaluate service quality, which was initially developed by Parasuraman, Zeithaml, and Berry in 1988 to measure customer perceptions of service quality (Y. L. Wang, Tainyi, Luarn, & Lu, 2015). As reported by Chingang Nde and Lukong (2010), SERVQUAL assesses both customer expectations and perceptions. Furthermore, it is noteworthy that 82% of companies in Columbia measure customer satisfaction from a quality perspective (Mendoza et al., 2020). This suggests that providing quality service at every touchpoint significantly enhances the likelihood of positive customer experience and overall satisfaction.

The original SERVQUAL model comprises ten service dimensions, namely tangibles, reliability, responsiveness, communication, credibility, security, competence, courtesy, understanding/knowing the customer, and access. These dimensions are measured on a 7-point Linkert scale, where 7 represents strong agreement and 1 signifies strong disagreement (Parasuraman, Zeithaml, & Berry, 1988). However, due to the overlap of the elements, the model was later revised to include only five dimensions, namely tangibles, reliability, responsiveness, assurance, and empathy.

In the current study, the SERVQUAL model is adopted to evaluate the elements that impact the customer experience, with minor alterations to the construct names to make them unique to the current study. Servicescape, staff expertise, and speed of service are selected as new measures for this study since they are fundamental aspects of the service experience, unlike assurance and empathy. These two latter elements are dependent on the mood of the staff at a particular point in time, and firms have no control over the feelings of their staff. Therefore, the current study focuses on measuring the customer experience only on the elements that the firm has direct influence over by setting the standard and having complete control.

Based on the above discussion, the primary reasons for modifying the SERVQUAL model to fit the current study are as follows:

- SERVQUAL is a widely utilized tool for measuring service quality, while this study focuses on assessing the customer experience.
- Several key components of SERVQUAL have shown capacity to impact satisfaction, loyalty, and retention (Chang & Horng, 2010)

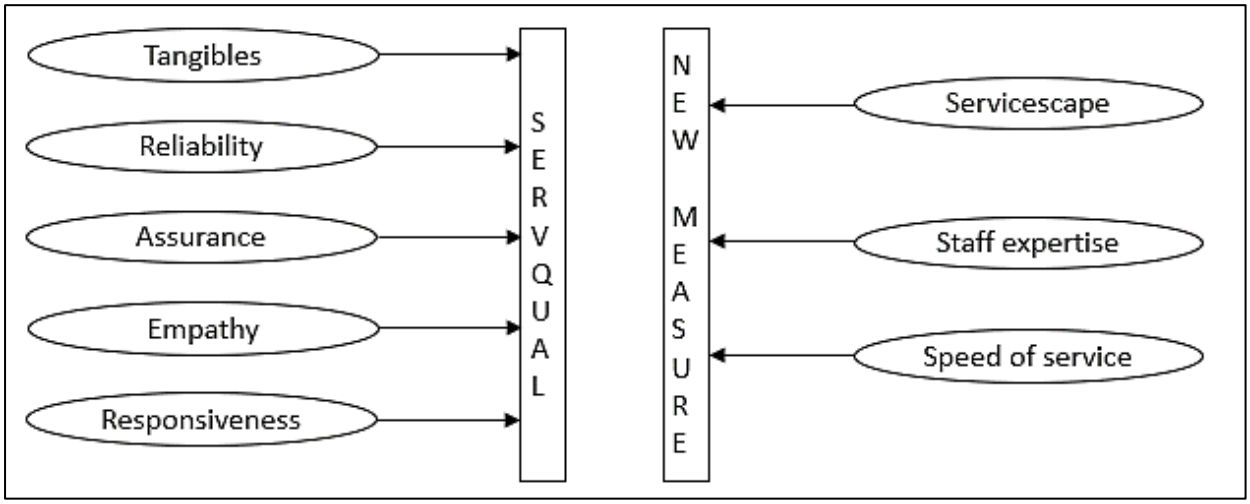

Figure 1: SERVQUAL and new measures of customer experience.

1.3 Research problem

The concept of customer experience is not a novel idea in service-oriented businesses, particularly in hair salons and spas. It is widely accepted that it costs more to acquire a new customer than it does to retain an existing one, thus the emphasis on providing quality services to customers. Scholars have conducted extensive

research on customer experience over the years, seeking to provide businesses with effective strategies to differentiate themselves.

Empirical studies have explored various aspects of customer experience, such as total customer experience management (Berry et al., 2002), customer satisfaction in retail contexts (Lynch et al., 2018), the relationship between customer experience, satisfaction, and loyalty intentions (Klaus & Maklan, 2013; Lemon & Verhoef, 2016), commitment (Keiningham et al., 2017), and customer satisfaction and loyalty in fast-food restaurants (Saneva & Chortoseva, 2020).

Previous research has identified discrepancies in the relationship between customer experience, satisfaction, and loyalty due to conflicting results. For example, a study on customer experience in banks and another on package tour services found that a positive customer experience leads to satisfaction and loyalty (Cetin, 2020; Garg et al., 2014). However, Dagger and O'Brien (2010) and Palmer (2010) questioned the effects of customer experience on loyalty, with the former investigating the impact between novice and experienced customers and the latter doubting that high satisfaction results in loyalty. These conflicting results give rise to confusion and necessitate a deeper understanding of the impact of customer experiences, satisfaction and loyalty at South African hair salons and spas.

Based on the above arguments, this study addresses the current marketing problem by investigating *customer experience, satisfaction and loyalty at South African hair salons and spas.*

1.4 Research aim

The main aim of this research is to investigate customer experience, satisfaction, and loyalty at South African hair salons and spas.

1.5 Research objectives

- To evaluate antecedents of customer experience, satisfaction, and loyalty in South African hair salons and spas
- To assess the differences in perception of experience, satisfaction, and loyalty across genders and years of experience in the beauty industry
- To investigate the effects of customer experience on satisfaction and loyalty in the beauty industry

The SERVQUAL model is adopted and modified to evaluate the elements that impact the customer experience. Servicescape, staff expertise, and speed of service are selected as new SERVQUAL measures to measure their impact on customer experience.

H1: Servicescape has a significant impact on customer experience.

H2: Staff expertise has a significant impact on customer experience.

H3: Speed of service has a significant impact on overall customer experience.

H4: Customer experience has a significant impact on customer satisfaction.

H5: The perceived price has a significant impact on customer satisfaction.

H6: Customer satisfaction has a significant impact on customer loyalty.

H7: There is a statistical difference in customer experience, satisfaction, and loyalty between novices and experienced customers.

H8: There is a statistical difference in perception of experience, satisfaction, and loyalty across genders.

1.6 Significance of the study

The primary purpose of this research is to examine the effects of customer experience on satisfaction and loyalty in South African hair salons and spas. Given the increasing importance of customer experience in the service sector, where customers demand

value for money, it is crucial to explore this concept further. This study aims to provide valuable insights to both scholars and practitioners in the marketing field. The results of this research will contribute to the existing body of knowledge on customer experience, its antecedents, and its outcomes, ultimately aiming to enhance the quality of service and customer experience in the service environment.

1.7 Research contribution

The concept of customer experience has garnered significant attention among scholars and researchers alike, with a particular focus on managing the various factors that impact the customer experience. This research forms a part of the broader body of knowledge within the literature on the influential factors of customer experience in a service environment and its impact on satisfaction and loyalty.

The theoretical contributions of this study will be of value to scholars, who can use the results as a foundation for their research and literature. They may also build upon the current study by replicating it to remote services or by refining the conceptual framework to address any identified gaps.

In addition, management will benefit from the insights provided by this research regarding the importance of staff expertise, speed of service, and the overall environment in a service setting. This knowledge can be used to enhance the customer experience elements within their companies, leading to a competitive advantage.

1.8 Study limitations

Although this study has the potential to make significant contributions, some limitations can be improved upon in future research. This research focuses specifically on the beauty industry in South Africa, with an emphasis on hair salons and spas. Other services outside of the beauty industry were not considered within the scope of this study. The focus of this research encompasses face-to-face and delimited remote services, with the former being the primary focus. Services provided over the phone, via the Internet, at the customer's site, and at any location other than the service

provider's site were excluded from the scope of this study. The research was also limited to individuals between the ages of 18 to 45 years residing in the Gauteng Province.

Upon conducting data analysis and presenting the results, it was discovered that there was an issue with discriminant validity on staff expertise, customer experience, satisfaction, and loyalty. The MSV values for these constructs were higher than their respective AVE values, indicating a problem with discriminant validity. This limitation is attributed to the fact that the model was not further pruned, as such a process did not result in improved model performance.

1.9 Definition of terms

Customer experience: A series of interactions between a customer and a company that evokes reactions which solely depend on the level of customer involvement in service delivery (Pekovic & Rolland, 2020).

Customer loyalty: A positive attitude towards a service provider which can be seen by repeat purchases (Mandira, SULIYANTO, & NAWARINI, 2018).

Customer satisfaction: The level of fulfilment that customers experience through their interactions with a company (Keiningham et al., 2017).

Novice: A person with no experience with the service or brand (Wiener, Flaherty, & Wiener, 2022).

Perceived price: A measure of the fairness of cost price compared to perceived value which is subjective to the customer's opinion of the service quality expected from the company (Sumaedi, Bakti, & Metasari, 2011).

SMMEs: Small, Micro Medium Enterprises

Service: An output of applications and skills by a business in partnership with customers, as customers actively participate in value creation (Greer et al., 2016).

S-D Logic: Service-dominant logic (S-D logic) is the foundation for general theory in the marketing discipline (Brodie, Saren, & Pels, 2011).

Servicescape: A conscious design of the surrounding space using elements such as colour, shape, noise, music, and scents to create an ambience (Hooper, Coughlan, & Mullen, 2013).

SERVQUAL: A widely recognized scale utilized to measure customer perceptions of service quality (Y. L. Wang et al., 2015).

Speed of service: The time it takes to perform a service (Church & Newman, 2000).

Staff expertise: The ability of staff to deliver a service to the expected standards, based on the knowledge and skills required (Yarimoglu, 2014).

1.10 Assumptions

The study assumed the following:

- The respondents had already celebrated their 18th birthday at the time the study was conducted.
- The respondents possess the ability to comprehend the questions and distinguish between the concepts.
- The participants in this study will provide honest and accurate responses.
- It is assumed that the respondents will represent typical perspectives and experiences.

1.11 Chapter outline

This document is divided into six chapters. Chapter one introduces the concepts of customer experience, satisfaction, and loyalty in the beauty industry. A brief description of the SERVQUAL model, the current marketing problem, the research question, objectives, significance of the study and assumptions follows thereafter.

Chapter two will start by introducing the topics covered. The first section will define customer experience, followed immediately by the theoretical framework which

includes Service-Dominant Logic and the service context. This chapter will conclude with a conceptual framework.

Chapter three discussed the methodology used for this research. The sections under discussion include the research approach, research design, population and sampling methods, data collection method, measuring instrument, data analysis methods, and ethical considerations. The discussion will follow the order above. A conclusion will summarise this chapter.

Chapter four presents the research results after meticulous data analysis. The introduction of the chapter is followed by data screening and sample characteristics. The results are presented in tables and figures. Finally, a summary of the results concludes this chapter.

Chapter five entails a thorough discussion of the results. The first section will be an introduction, followed immediately by a detailed hypothesis results discussion. The final section will be the conclusion.

The final chapter, chapter six, will be the conclusion and recommendations. Like other chapters, the introduction will form the first section. The summary of the results will follow immediately, followed by the recommendations. The suggestion for future research will conclude this chapter.

CHAPTER 2: LITERATURE REVIEW AND THEORETICAL FRAMEWORK

2.1 Introduction

The literature review is structured into three sections, each of which plays a vital role in providing an in-depth understanding of the topic of customer experience. The first section introduces the concept of marketing which includes a discussion on service marketing, product service continuum, and products with high search attributes vs products with high credence attributes. The second section delves into a theoretical framework with a discussion of the service concept and S-D logic theory which serve as the guiding principle for this study and the service context. The next part of the literature review is the conceptual framework and hypothesis formulation, which are based on the selected constructs, including servicescape, staff expertise, speed of service, perceived price, novice/experienced customers, and gender. These constructs will be tested later to validate the theory and provide answers to the research question. The last part will be the conclusion of the literature section.

2.2 Concept of marketing

Marketing has become the business philosophy and the foundation for organisational survival in a highly competitive market environment (Darmawan & Grenier, 2021). At a strategic level, marketing has the potential to contribute to business models (Maucuer, Renaud, Ronteau, & Muzellec, 2022). Marketing activities are used to create satisfying products and services for the mutual benefit of the customer and the business (Darmawan & Grenier, 2021).

2.2.1 Service marketing

Marketing has shifted from transactional exchange to relationship-building (Brodie et al., 2011). In the service-dominant space, the power has shifted from companies to customers, and companies are compelled to provide excellent services to gain a sustainable competitive advantage (Chingang Nde & Lukong, 2010). The shift requires improving the quality of services provided to customers (Botha, Kruger, & De Vries, 2012). Service marketing is a strategic move to gain a competitive advantage for

organisations (Darmawan & Grenier, 2021). Bolton et al. (2018) predicted that the trend in social realms will accelerate the need for customized service experiences in the future.

2.2.2 Product service continuum

The focus of marketing professionals has also transitioned from managing branded goods to managing customers' experiences with companies (Dion & Borraz, 2017). The marketing intelligence has accelerated the boom of service marketing which contributes to customer experience (Lies, 2022).

2.2.3 Product with high search attributes vs products with high credence attributes

Information economics classifies products into three categories based on their attributes namely search, experience and credence. Search attributes such as product ingredients are information readily available before purchase, experience attributes are visible after product usage, and credence attributes are those that consumers find hard to evaluate information even after product use (Gottschalk, 2018; Gunasti, Kara, & Ross, 2020). Services such as massages, hairdressing, manicures, pedicures, and facials can be classified as experience goods because the product attributes can be discovered only after the service is produced.

2.3 Theoretical framework

2.3.1 Service dominant logic

In recent years, firms have placed a significant emphasis on the provision of quality services to customers, rather than on the innovation of products for business. As such, this study is grounded in the theory of Service-Dominant Logic (S-D logic), which serves as the ultimate foundation for general theory in the marketing discipline (Brodie et al., 2011), and relates customer experience reactions to the consumption process (Becker & Jaakkola, 2020).

According to Lusch and Vargo (2014), S-D logic is based on the knowledge of human micro-activities and exchanges of competencies between individuals and organizations, such as in the case of hair salons and spas, where customers and organizations exchange activities to co-create value for mutual benefit. The authors noted that this theory views knowledge as a fundamental competitive advantage in service-dominant spaces.

The four foundational premises of S-D logic are: "service is the fundamental basis for exchange; the customer is always a co-creator of value; all economic and social actors are resource integrators; and value is always uniquely and phenomenologically determined by the beneficiary" (Brodie et al., 2011:4). S-D Logic posits that firms cannot produce a service and deliver value without interacting with customers (Woratschek, Horbel, & Popp, 2020). Hair salons and spas cannot provide services such as massage, manicures, braiding, and hair treatment without interacting with customers. Customer-company interactions during service delivery are crucial for value creation and customer experience.

2.3.2 The service context

The service sector plays a crucial role in South Africa's growth and development strategy (Baker, Bentley, & Lamb, 2020). It is estimated that the service sector contributes approximately 65% to the country's total GDP (Kasongo, Sithole, & Buchana, 2023). This sector is highly diverse and includes a wide range of services such as banking, insurance, personal services, architecture, and teaching, among others (Worlitz, Vu, Hettling, & Woll, 2019). Service innovation is a vital differentiator for service firms that aim to achieve a competitive advantage and overall business success (Helkkula, Kowalkowski, & Tronvoll, 2018; Kasongo et al., 2023).

A service is a business process that combines resources to create value for customers. According to Iglesias and Guillen (2002), a service is a series of activities that combines people and equipment to satisfy customers' needs. Edvardsson, Gustafsson, and Roos (2005), have proposed activities, interactions, and solutions as the three main elements that describe a complete service to satisfy customers' needs.

Furthermore, Greer et al. (2016) defined service as an output of applications and skills by a business in partnership with customers, as customers actively participate in value creation. The key characteristic of a service is that there should be an interaction between people and equipment to produce a valuable outcome that satisfies the customer.

The following descriptions of service have been adopted for this research and their relevance to hair salons and spas:

- An intangible series of activities that a company undertakes to fulfil customer needs.
  (The provision of hair treatment, manicure and massage are a series of activities that form part of the service delivery process)
- A service cannot be stored for later use.
  (The enjoyment of a massage at a spa is consumed during the service delivery process)
- A customer must be available and participate in the service delivery process.
  (Hair treatment, manicure and massage require the physical presence of the customer)
- The service is delivered at the location of the service provider and not remotely through technology.
  (The above-mentioned services cannot be provided remotely through technology)

This study aims to evaluate the effects of customer experience on satisfaction and loyalty in the beauty industry in South Africa for service providers such as hair salons and spas. The selection of these services is because they cannot be provided remotely without the customer being present and interacting with the service provider. The availability and interaction of the customer during the service delivery process are pivotal for the experience to occur and allow for an evaluation of satisfaction and loyalty intentions.

2.4 Conceptual framework and hypothesis development

A formal framework is introduced to appraise the service variables that impact customer experience. The three constructs to be examined are servicescape, staff expertise, and speed of service, which serve as independent variables that influence the outcome of customer experience. These independent variables are measurable constructs that can predict the outcome or dependent variable when manipulated. The selection of these variables assumes that the service provider can exercise some degree of control over them to enhance the customer experience.

Three moderators, perceived price, gender, and novice and experienced customers are introduced to predict the level of impact on satisfaction and loyalty. These moderators were chosen because they depend on the service receiver. The choice of using variables from the company perspective and moderators from the receiver perspective reflects the context of service as an interaction between both the company and the customer in value creation.

2.4.1 Customer experience

Customer experience is a formal assessment of all customer-company interactions related to purchasing behaviour (Klaus & Maklan, 2013). Some authors define customer experience as an interactive and dynamic process of interactions at all touchpoints including pre-purchase, purchase, and post-purchase (Lemon & Verhoef, 2016; McColl-Kennedy et al., 2015). Becker and Jaakkola (2020) assume that customer experience can be measured at touchpoints throughout the customer journey using cues. Roy (2018) defines customer experience as an attitudinal outcome resulting from a service encounter, which depends on the moments of contact. Becker and Jaakkola (2020) define customer experience as a non-deliberate reaction to a stimulus, rather than a conscious evaluation of a service or product. According to Setiawan (2021), customer experience is a perception of service quality through interactions with the service provider. Based on these definitions, this study operationalizes the following definition of customer experience: customer experience is an outcome of an interaction between the customer and the company, occurring at the moment of contact.

In a service context, experience is not an after-effect but is obtained along with the consumption of service (Chang & Horng, 2010). Customer experience elements, such as physical surroundings and resources within a service environment, are of utmost importance in creating a unique service experience. It is believed that the servicescape plays a significant role in shaping the customer experience (Keiningham et al., 2017). Additionally, service staff are crucial in delivering superior service to customers (Van der Heijden, Schepers, Nijssen, & Ordanini, 2013). The impact of queue length, number of service consultants on duty, time spent in service, and number of customers entering the store also affects the customer experience (Botha et al., 2012).

This study focuses on the influence of servicescape, staff expertise, and speed of service variables on customer experience and their impact on satisfaction and loyalty. According to Garg et al. (2014), a positive customer experience leads to satisfaction and loyalty. Hence, enhancing customer experience can result in greater loyalty to the service provider (Keiningham et al., 2017). Customer experience is crucial for differentiation and business growth (Setiawan, 2021). Firms can manage customer experience by carefully designing servicescape elements such as furniture, lighting, sound, and staff uniforms (Becker & Jaakkola, 2020).

2.4.2 Servicescape

Servicescape, a concept first introduced by Mary Jo Bitner in 1994, refers to the design of a physical environment using tangible and intangible elements to create a unique customer experience. The use of atmospherics, introduced by Kotler in 1973, is now commonly known as servicescape (Baker et al., 2020). Servicescape is deliberately designed to influence customer perception through elements such as colour, shape, noise, music, and scents (Hooper et al., 2013). In the case of service-dominant businesses such as salons and spas where customers have a prolonged stay, factors like lighting, ventilation, and music play a crucial role in shaping their perceptions and influencing the experience. Essentially, servicescape is the physical surroundings of a service company that forms an integral part of the resources used in creating value for customers in a service-dominated space (Reimer & Kuehn, 2005).

The adages 'first impressions last' and 'you never get a second chance to make a first impression' hold significant importance for individuals seeking to make a lasting impact and favourable first impression in both business and personal settings. In the context of business, the service environment is the initial aspect perceived by customers and forms the basis for their assumptions about the quality of service they can expect (Hooper et al., 2013). Servicescape plays a critical role in the service environment by creating a first impression on customers (NasarAmini Jeloudarlou, Aali, Faryabi, & Bafandeh Zendeh, 2022).

Servicescape can attract and retain customers within a store for an extended period (Baker et al., 2020). The design of a store, which has been meticulously planned and executed, has a profound impact on customer behaviour and influences experiential marketing for the business (Situmorang, Mulyono, & Azmi, 2018). Consequently, customers at Sorbet take photographs of themselves undergoing manicures or foot massages due to the aesthetically pleasing setting and optimal lighting and share them with their friends on social media. These inviting spaces provide patrons with positive experiences and increase their likelihood of returning in the future.

A clean environment not only facilitates better service but can also prevent service failures (Vilnai-Yavetz & Gilboa, 2010). If customers invest a certain amount of time in receiving a service and making a payment, they expect the service environment to be free of clutter and hazards. A salon setting with cords and debris scattered about, or a floor covered in hair, is unappealing to customers. Similarly, a spa with an unkempt lawn or a dilapidated building will give patrons a negative impression of the service quality. Servicescape is a crucial resource for operations within a service environment (Nilsson & Ballantyne, 2014).

The physical elements of the servicescape, such as signs and symbols, play a critical role in facilitating customer-company interactions and enriching the overall experience (Bolton et al., 2018). Furthermore, aesthetics can be utilized as a branding tactic to establish a distinct appearance that differentiates a business from its competitors (Falkof, 2022). Sorbet Man and Legends Barber are two prominent barbershops with a unique and appealing appearance. Their logos are easily recognizable and

associate the business with quality service. It is well-documented that the store environment can have a significant impact on customer emotions, which in turn influences mood and behaviour (Sachdeva & Goel, 2015).

The servicescape provides visual cues that serve as a pathway to help customers understand and appreciate a unique experience (Kumar, Purani, & Sahadev, 2017). The design of the space, furniture, lighting, and other elements of the servicescape play an important role in facilitating the service experience and enhancing the overall customer experience. In the case of Sorbet, the bright and colourful logo, good lighting, calming atmosphere in the salon, and friendly staff all contribute to a positive customer experience by influencing customers' moods and behaviours.

It is believed that servicescape has some level of influence on customer experience (Keiningham et al., 2017). It has been reported by various authors that the elements of the servicescape can significantly influence the customer experience in the service industry. Studies have found that servicescape can impact customer perceptions of the experience (Situmorang et al., 2018), significantly influence customer experience in the hospitality environment (NasarAmini Jeloudarlou et al., 2022), and be a factor in determining customer experience based on online reviews of hotel facilities (Fu, Wei, Wang, & Kim, 2022). However, Nokuthula and Tavonga (2020) questioned the technical efficiency of infrastructure in a hairdressing environment, and Fernandes and Neves (2014) suggested that the role of servicescape in service design requires further development.

Based on the above, the following hypothesis was proposed:

H1: Servicescape has a significant impact on customer experience.

2.4.3 Staff expertise

Staff refers to the human resources that are integral to the factors of production in a service environment. As their engagement is required in a service process, staff are considered a strategic resource for delivering quality service (Darmawan & Grenier, 2021). Expertise encompasses the knowledge and skills that staff possess, which

enable them to provide a service. Staff expertise is characterized by the ability to deliver a service to the expected standards, based on the knowledge and skills required (Yarimoglu, 2014). According to Lynch et al. (2018), staff expertise includes product knowledge, the ability to listen to customers, and problem-solving skills. The consensus is that staff expertise is related to the knowledge, qualities, and competencies of service staff, which enables them to perform their tasks efficiently. Staff competence is a crucial component of service quality, which ultimately results in a positive customer experience (Haverila & Haverila, 2018).

Service staff play a pivotal role in a company's efforts to deliver superior services to customers (Van der Heijden et al., 2013). As such, most service providers employ a formal process to recruit staff by requesting a curriculum vitae that outlines the candidate's academic and professional background, skills certifications, and criminal records (Mendoza et al., 2020). This process ensures that the right individuals with the appropriate set of skills are selected based on the company's requirements and job output expectations. By selectively hiring staff with the right skills and attitudes, hair salons and spas can give their customers positive experiences.

The staff expertise, particularly in the domain of service delivery, serves as a unique competitive advantage that cannot be replicated with a physical product. For example, the quality of service at one salon can differ greatly from another due to differences in staff expertise within the field. The proficiency of employees directly influences the level of service quality and customer experience (Brady & Cronin Jr, 2001). Customers tend to have confidence in staff who possess expertise in their respective roles.

For the relationship between staff expertise and customer experience, the following hypothesis is developed:

H2: Staff expertise has a significant impact on customer experience.

2.4.4 Speed of service

The speed of service refers to the time it takes to perform a service, and this can be influenced by factors such as staff competency, the number of frontline staff, waiting

time, staff efficiency, and equipment efficiency (Church & Newman, 2000). Taylor (1994) defines waiting time as the interval between when a customer is ready to receive a service and when the service is delivered, and this can be influenced by factors such as arriving early, long queues, or delays by the service provider. Extended queues can lead to frustrated and dissatisfied customers, which ultimately impacts the overall customer experience (Botha et al., 2012). Furthermore, waiting time can occur before, during, and after the service, and service providers should not assume that customers only judge time from when the service begins (Durrande-Moreau & Usunier, 1999).

Prompt service is directly linked to service quality (Zygiaris et al., 2022). Some studies have found that extended waiting times negatively impact customer experience (Durrande-Moreau & Usunier, 1999). Maddern, Maull, Smart, and Baker (2007) reported a positive correlation between speed of service and customer satisfaction. Customers form perceptions of experience and rate satisfaction based on how the service provider manages time, so hair salon and spa service providers need to manage their time effectively to ensure positive customer perceptions.

H3: Speed of service has a significant impact on overall customer experience.

2.4.5 Customer satisfaction

Customer satisfaction is vital for the success of these businesses in the highly competitive market. A deeper understanding of what customers perceive as positive experiences from a service increases the chances of satisfaction and overall business success (Fu et al., 2022). The reciprocal relationship between customer experience and engagement often leads to satisfaction (Zaid & PATWAYATI, 2021). Satisfaction is a performance measure which contributes to repeat purchases (Manyanga et al., 2022).

Customer satisfaction is an outcome of the quality of the customer experience, which is commonly measured using the Net Promoter Score (Lemon & Verhoef, 2016). According to Kumar S; Mokha (2021), customer satisfaction is determined by comparing actual service performance with customer expectations. Similarly, Sumaedi

et al. (2011) view customer satisfaction as an emotional evaluation of perceived quality relative to the price paid for a service. Customers form their expectations based on their prior experiences with the same service provider or competitors, and these expectations influence their perception of quality. A disconnect between expectations and actual service delivery often results in customer dissatisfaction.

Other scholars have defined customer satisfaction as the positive feelings or outcomes that customers experience as a result of a service offering (Lee, 2013). According to Roy (2018:409), satisfaction is “an instant outcome of a favourable customer experience”. Customer satisfaction is the level of fulfilment that customers experience through their interactions with a company Keiningham et al. (2017). Haverila and Haverila (2018) argued that customer satisfaction is transaction-based and can only be measured after the purchase has been made. In today's competitive marketplace, customer satisfaction is widely recognized as a key driver of business success and growth (Kumar S; Mokha, 2021).

In the banking sector, customer satisfaction is typically evaluated through an assessment of service availability, responsiveness, and overall satisfaction with the service (Febrian, Simanjuntak, & Hasanah, 2021). Panday and Nursal (2021) also believe that customer satisfaction is best measured by an evaluation of service quality. This assessment aligns with the SERVQUAL model, which measures service quality elements to gauge the customer experience. Moreover, the authors claim that satisfaction cannot be achieved without a positive customer experience, and reported a positive and significant impact of customer experience on customer satisfaction. Gao et al. (2020) suggested that enhancing the customer experience can lead to increased customer satisfaction and a reduction in the churn rate in banking services.

In the retail environment, customer experience plays a crucial role in business success. Service providers strive to fulfil customers' needs at all times, as it has become relatively easy for customers to switch to another service provider after experiencing an unsatisfactory service (Chinomona & Dubihlela, 2014). In a study to determine whether the effects of customer experience on loyalty create a sustainable competitive advantage in retail, Pei, Guo, Wu, Zhou, and Yeh (2020) reported that a

positive relationship exists between customer experience and loyalty, with higher satisfaction reported in physical stores compared to online shopping. The results further indicate that both customer experience and satisfaction are critical sources of a sustainable competitive advantage.

A study was conducted to compare the predictors of customer satisfaction and loyalty between quality and experience in tourism. The results revealed that customer experience is a better predictor of customer satisfaction and loyalty than quality (Cetin, 2020). The authors found that, in tourism, customers prioritize memorable experiences over quality services from staff. This suggests that satisfaction is measured differently in different contexts, with salon customers expecting quality services rather than experiences in-store.

The connection between customer experience, satisfaction, and loyalty holds true in the business-to-business context (Human, Ferreira, Robertson, & Whiterspoon, 2020). The authors believe that positive customer interactions during value creation enhance the relationship between customers and companies, leading to increased customer satisfaction. In addition, the study found that satisfied customers in a business-to-business context are more likely to spread positive word-of-mouth to their peers than in a business-to-consumer context. Jammine et al. (2019) support the findings and stated that satisfied customers are more likely to give a positive evaluation of the quality of service received.

A hypothesis was developed to test the impact of customer experience on customer satisfaction in hair salons and spas:

H4: ***Customer experience has a significant impact on customer satisfaction.***

2.4.6 Perceived price

Price is a value that customers sacrifice to receive a service (Zhong & Moon, 2020). Gaberamos and Pasaribu (2022) further asserted that price is the cost of a sacrifice for a service, and can be utilized as a positioning strategy by businesses. Setiawan (2021) defined price as the opportunity cost related to service delivery, as customers

sacrifice a certain amount of money in exchange for a service, expecting a certain level of satisfaction. Simply put, price serves as the medium of exchange for the benefits of a service.

Perceived price, on the other hand, is a measure of the fairness of cost price compared to perceived value, and is subjective to the customer's opinion of the service quality expected from the company (Sumaedi et al., 2011). Lee (2013) alluded to perceived price as the customer's mental assessment of the cost fairness of a service compared to what a competitor charges. Perceived price is the monetary value required to benefit from a service, and the higher the perceived price, the higher the expected level of service quality.

The perceived price of a service plays a critical role in how customers perceive service quality and how a service provider is evaluated on service quality, which ultimately impacts satisfaction and loyalty (Zhong & Moon, 2020). If customers perceive the price of a service to be fair, the likelihood of satisfaction with the service is high. Conversely, a higher actual price above what customers perceive will negatively impact the overall experience and satisfaction (Shamsudin, Nayan, Ishak, Esa, & Hassan, 2020). Therefore, service providers must match price with quality.

It is a widely recognized practice for customers to seek value for their money during the purchasing process (Noble, Griffith, & Adjei, 2006). Given that services are intangible and are often produced after purchase, customers often face uncertainty about the quality and price fairness of the service they are receiving (Reimer & Kuehn, 2005). As a result, customers rely on elements such as servicescape and perceived price to estimate the level of experience and satisfaction of the service provider. In such cases, price plays a crucial role in the purchasing process, particularly when there are more affordable alternatives that provide higher levels of satisfaction (Iglesias & Guillen, 2002).

The satisfaction level of customers is directly linked to the price they pay, as people associate higher quality with greater value. This correlation is particularly pronounced in service-dominated industries such as hotels, where perceived price has a positive

and significant impact on satisfaction (Susanti, 2019). Setiawan (2021) also reported a positive relationship between perceived prices and satisfaction in low-cost airline carriers. Other researchers have found that perceived price has a positive and significant influence on satisfaction in the delivery of goods and services (Mandira et al., 2018), telecommunication (Ashraf & Niazi, 2018), budget hotels (Susanti, 2019), and fast-food restaurants (Zhong & Moon, 2020). Furthermore, research has shown that customers who are satisfied with a service are more likely to demonstrate loyalty, with perceived price having a positive and significant effect on loyalty (Cakici, Akgunduz, & Yildirim, 2019).

Based on the above discussion, the following hypothesis was formulated to investigate the moderating effect of price on customer satisfaction:

H5: The perceived price has a significant impact on customer satisfaction.

2.4.7 Customer loyalty

Customer loyalty is a desirable behaviour for businesses as it is a manifestation of a positive attitude towards a particular service provider, demonstrated through repeated purchases (Woratschek et al., 2020). While the authors believe that loyalty results in financial gains for the firm, it is important to note that psychological connections with the store, such as brand identification, can build relationships that may lead to loyalty. It is acknowledged that customer identification with the store could be a good start to building relationships, and it is crucial to understand that customer loyalty is not solely dependent on social interactions with staff or friends who frequent the store.

Customer loyalty has been defined by Mandira et al. (2018) as a positive attitude towards a service provider, demonstrated through repeat purchases. However, it is important to note that repeat purchases may not always be a result of loyalty, but rather due to factors such as lack of substitutes, distance, or price sensitivity. Other authors have defined loyalty as a conscious decision to support a brand or product demonstrated through repeat purchase behaviour and commitment (Keiningham et al., 2017; Othman, Harun, De Almeida, & Sadq, 2020). Setiawan (2021) emphasized that customer loyalty can also be demonstrated through a willingness to continuously

support a company by buying more from the same company and recommending its services to peers. In summary, customer loyalty is a display of a positive attitude towards a specific brand, demonstrated through repeated support and advocacy for the brand over other competitors.

Customer loyalty has the potential to enhance market share and profitability, as it is often associated with repeat business and increased revenue. Loyalty can be measured by evaluating the frequency of customer visits and total spending in the store (Cetin, 2020). Customers who demonstrate loyal behaviour tend to consider the brand as their first choice in the banking industry (Makudza, 2020), which is driven by trust and commitment (Kumar S; Mokha, 2021).

To foster customer loyalty, businesses can focus on enhancing customer experience (Keiningham et al., 2017). Customers are likely to demonstrate loyal behaviour if they perceive the experience as high-quality (Gao et al., 2020). The perceived experience is a more significant determinant of loyalty than satisfaction. A study on the Do-It-Yourself sector found that a combination of emotional, cognitive, and social dimensions of the customer experience can lead to higher loyalty compared to other dimensions such as demographics and social and technological dimensions (Pekovic & Rolland, 2020). Additionally, Setiawan (2021) reported a significant positive impact of customer experience on loyalty in low-cost carriers.

Customer satisfaction can also be used as a predictor of loyalty (Hasfar, Militina, & Achmad, 2020). A study conducted to determine the effect of customer satisfaction on loyalty, focusing on service quality and location in freight services, found a positive relationship between the two (Risnawati et al., 2019). The study measured customer satisfaction using the quality service, perceived price, and cost dimensions. The authors concluded that improving these variables can increase the likelihood of satisfaction and, in turn, loyalty.

The relationship between customer satisfaction and loyalty can be enhanced through various intermediaries, depending on the discretion of the service provider. According to Mgiba and Madela (2020), loyalty programs are commonly employed as a

differentiation strategy, but their effectiveness is limited in highly competitive industries, such as the petroleum industry. The authors assert that loyalty programs mediate the relationship between customer satisfaction and loyalty in the petroleum industry. However, this influence does not apply in all contexts. Human et al. (2020) found no significant difference in loyalty levels between customers enrolled in loyalty programs and those who were not, despite the belief that such programs are relationship management tactics designed to encourage customer loyalty.

Customer loyalty is directly linked to customer satisfaction, which is derived from trust and commitment (Kumar S; Mokha, 2021). Research has demonstrated a positive and significant impact of customer satisfaction on loyalty in various industries, including financial services (Desiyanti, Sudja, & Martini, 2018), banking (Manyanga et al., 2022), fast-food restaurants (Saneva & Chortoseva, 2020; Zhong & Moon, 2020), and hair salons (Jammine et al., 2019).

Based on the above discussion, the following hypothesis is proposed.

H6: *Customer satisfaction has a significant impact on customer loyalty.*

2.4.8 Novice and experienced customers

Customers are classified as novice or experienced based on the number of times they have utilized the same service. The level of experience with a service influences the behaviour of customers (Wiener et al., 2022). Izogo, Jayawardhena, and Karjaluoto (2023) assume that novices have lower expectations for service quality and are therefore less critical during evaluations. Novices base their assessments on a single interaction, while experienced customers judge performance based on a longer period of service.

Customer satisfaction can vary based on the level of experience a customer has with a service (Haverila & Haverila, 2018). A memory of past service experiences can influence loyalty behaviours (Ali, Hussain, & Ragavan, 2014). Consumers with experience are more likely to look for cues to evaluate service, which can negatively impact their satisfaction levels and threaten their loyalty. Novices, on the other hand,

may stick with a service due to fear of poor service from competitors (Walsh, Evanschitzky, & Wunderlich, 2008).

Loyalty varies significantly between novice and experienced customers. Novices rely more on satisfaction than experience to be loyal (Dagger & O'Brien, 2010). Roy (2018) discovered that customer experience only impacts satisfaction for novice customers and impacts loyalty and repeat purchases for experienced customers. This is because novices have no expectations due to their lack of experience with the service, while more experienced customers have developed expectations and can make more informed judgments.

A recent study has revealed a disparity between the online reviews of hotels between novices and experienced customers, which has resulted in mixed emotions from prospective customers (Siddiqi & Akhtar, 2021). In particular, Izogo et al. (2023) discovered that customers who have had a negative experience with a service provider are more likely to provide credible eWOM than those who have had a positive experience. Moreover, novices are more likely to review their experience, regardless of whether it is negative or positive than experienced customers. Wiener et al. (2022) also reported that novices are more critical of their experience as they are often nervous as first-time customers, while experienced customers are less critical of what could be wrong during service delivery.

H7: There is a statistical difference in customer experience, satisfaction, and loyalty between novices and experienced customers.

2.4.9 Gender

Gender is a biological classification that distinguishes humans into male and female categories, with masculinity and femininity being the primary elements used to differentiate them (Ratsibe, 2010). In addition to its use in identifying living beings, gender is also utilized to classify robots in service environments (Seo, 2022).

Demographic characteristics such as gender, age, height, and appearance are commonly used in some countries, particularly China, to discriminate against certain

groups during the recruitment process for jobs (Li, Lin, Lu, & Veenstra, 2020). However, strict legislation in other countries prevents this discriminatory practice. Additionally, gender stereotypes such as women being less intellectually, physically, and psychologically capable than men still exist (Seo, 2022).

Marketing studies have shown that gender plays a significant role in market segmentation, penetration, influence on purchase decisions, and service evaluation (Walsh et al., 2008; Zhong & Moon, 2020). In terms of gender differences, the former observed that men are more likely to switch brands due to their risk tolerance, while women are more loyal to brands that satisfy them. However, Zhong and Moon (2020) found that gender did not have a significant moderating effect on service quality, satisfaction, and loyalty in a study investigating the drivers of customer satisfaction in Chinese fast-food restaurants.

It is widely accepted that there is limited consideration given to gender differences in the perception of service (Mokhlis, 2012). Karatepe (2011) emphasized the importance of acknowledging gender differences in research, due to the genetic distinctions between males and females, such as how they process and evaluate information. Males are known to process information more efficiently than females, leading to their willingness to seek alternative options, which increases the likelihood of switching (Noble et al., 2006). Additionally, Baker et al. (2020) discovered that male staff are often rated lower than their female counterparts during customer satisfaction evaluations in service environments.

Prior research has indicated that gender moderates the impact of empathy on customer satisfaction but has no influence on the service environment (Karatepe, 2011). Furthermore, gender has been found to moderate the relationship between customer experience and satisfaction in both online and physical shopping environments (Pei et al., 2020). However, Manyanga et al. (2022) reported that demographics, including gender, do not moderate the effects of customer experience on loyalty.

Despite the belief that customer demographics can impact customer-centric measures, some authors remain unconvinced of the role that demographics play in the effects of customer experience and its outcomes (Haverila & Haverila, 2018). Nevertheless, it is widely acknowledged that customer demographics, including gender, can significantly impact the perception of service quality and customer satisfaction.

Because of this inconclusive research, the following hypotheses were developed:

H8: There is a statistical difference in perception of experience, satisfaction, and loyalty across genders.

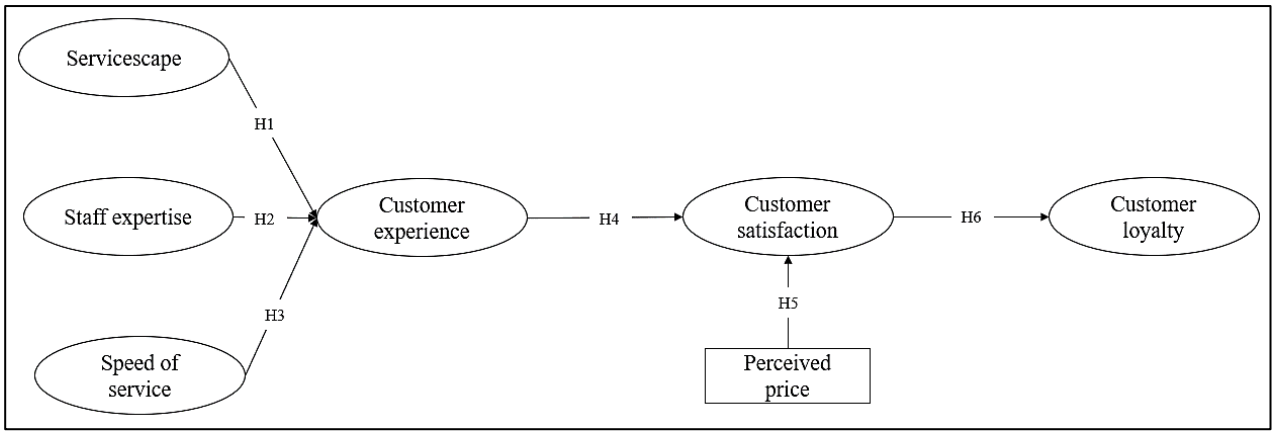

Figure 2: Conceptual framework.

Table 1: Hypothesis development

Hypothesis	**Reference**
H1: Servicescape has a significant impact on customer experience	(Fernandes & Neves, 2014), (Keiningham et al., 2017), (Bolton et al., 2018), (Nokuthula & Tavonga, 2020), (Fu et al., 2022), (NasarAmini Jeloudarlou et al., 2022) Servicescape affects customer experience in service-dominated

Hypothesis	Reference
	spaces. Customers derive more experience from outdoor facilities in a hospitality environment than they care about the interior elements. Well-designed spaces make customers feel comfortable and facilitate service delivery. A question still stands as to whether infrastructure in a hairdressing environment assists with technical efficiency during service delivery. Another author suggested that the role of servicescape in service design requires further development.
H2: Staff expertise has a significant impact on customer experience	(Brady & Cronin Jr, 2001) The results of the study proved that reliability, responsiveness, and empathy are important in delivering superior service quality. Staff form factors of production in service delivery, therefore engagement with customers influences the experience.
H3: Speed of service has a significant impact on overall customer experience	(Durrande-Moreau & Usunier, 1999), (Maddern et al., 2007) The speed at which a service is rendered negatively affects experience and loyalty. Some authors indicated that time in general (waiting for service) affects the overall experience. Customers get negative experience

Hypothesis	Reference
	when a service takes longer than planned.
H4: Customer experience has a significant impact on customer satisfaction	(Cetin, 2020), (Gao et al., 2020), (Pei et al., 2020), (Shamsudin et al., 2020), (Zhong & Moon, 2020), (Panday & Nursal, 2021) Positive interactions in service delivery leads to satisfaction. Furthermore, higher satisfaction increases changes in the positive evaluation of service quality.
H5: The perceived price has a significant impact on customer satisfaction	(Ashraf & Niazi, 2018), (Mandira et al., 2018), (Susanti, 2019), (Cakici et al., 2019), (Shamsudin et al., 2020), (Zhong & Moon, 2020), (Setiawan, 2021) People associate price with value in service-dominated industries. Customers are more satisfied with a service when they feel that the price is fair in relation to the quality of service.
H6: Customer satisfaction has a significant impact on customer loyalty	(Desiyanti et al. (2018), (Jammine et al., 2019), (Risnawati et al., 2019), (Gao et al., 2020), (Human et al., 2020), (Pekovic & Rolland, 2020), (Saneva & Chortoseva, 2020), (Zhong & Moon, 2020), (Setiawan, 2021), (Manyanga et al., 2022) A direct link has been reported between satisfaction and loyalty across many

Hypothesis	Reference
	service spaces such as in finance, banking, fast-food and hair salons.
H7: There is a statistical difference in customer experience, satisfaction, and loyalty between novices and experienced customers	(Walsh et al., 2008), (Dagger & O'Brien, 2010), (Roy, 2018), (Siddiqi & Akhtar, 2021), (Wiener et al., 2022) There is a moderation effect of satisfaction on loyalty for novice customers. Satisfaction decreases with time for experienced customers. The difference in customer experience determines how customers perceive and experience a service based on historical interactions or expectations. A difference in experience has been noted between novices and experienced customers from online reviews of hotel experience which has resulted in mixed emotions from prospective customers
H8: There is a statistical difference in perception of experience, satisfaction, and loyalty across genders	(Karatepe, 2011), (Haverila & Haverila, 2018), (Pei et al., 2020), (Manyanga et al., 2022) Gender was found to significantly moderate the relationship between experience and satisfaction and did not affect the relationship between satisfaction and loyalty. Some authors are still not convinced of the effects of gender on customer experience, satisfaction, and loyalty.

Table 2: Literature on customer experience, satisfaction, and loyalty

Reference	Objective	Variables	Sample	Method	Results
Risnawati et al. (2019)	To determine the effects of customer satisfaction on loyalty with a focus on service quality and location in freight services	- Service quality - Price suitability - Company location - Customer satisfaction - Customer loyalty	270	SEM	Customer satisfaction has an impact on customer loyalty in freight services
Cetin (2020)	To investigate the impact of service quality and experience on satisfaction and loyalty in a package tour environment	- Service quality - Customer experience - Satisfaction loyalty	356	Regression analysis	Customer experience significantly impacts customer satisfaction and loyalty in the service environment
Hasfar et al. (2020)	To determine the effect of customer value and customer experience on customer satisfaction and loyalty	- Customer experience - Customer value - Customer satisfaction - Customer loyalty	80	Partial Least Square	Customer experience has a significant impact on customer satisfaction and loyalty.
Saneva and Chortosev a (2020)	To examine the relationship between service quality, customer satisfaction and customer loyalty in	- Service quality - Satisfaction - Loyalty	148	Cronbach alfa coefficient	There is a significant impact of satisfaction on loyalty in fast-food restaurants

Reference	Objective	Variables	Sample	Method	Results
	fast-food restaurants				
Febrian et al. (2021)	To analyse the effects of benefits offered and customer experience on the reuse of mobile banking through customer satisfaction	- Customer experience - Customer satisfaction - Re-use intention	280	Structural Equation Modelling	Customer experience has a positive influence on satisfaction in the banking sector
Kumar S; Mokha (2021)	To review the literature on the relationship between E-CRM, customer experience, customer satisfaction and customer loyalty in the context of the banking industry.	- Customer experience - Customer satisfaction - Customer loyalty,			Customer loyalty is a result of customer satisfaction
Panday and Nursal (2021)	To know how service quality and customer satisfaction affect McDonald's customer loyalty	- Customer satisfaction - Customer loyalty	210	Multiple linear regression	Customer satisfaction has a positive and significant effect on loyalty in fast-food restaurants

2.5 Conclusion of literature review

Chapter 2 commences with an in-depth examination of the concept of marketing and a discussion of customer experience which forms the foundation of this study. The theoretical framework guiding this research is S-D Logic which is introduced briefly and followed by a discussion on the service context. A conceptual model is developed through hypothesis generation that illustrates the interrelationship between customer experience and its outcomes. This study has 8 hypotheses that seek to establish the connections between customer experience, satisfaction, and loyalty with the help of moderators such as perceived price, gender, and customer type.

CHAPTER 3: RESEARCH METHODOLOGY

3.1 Introduction

In chapter three, the methods employed in this research are delineated. Initially, the research approach is introduced, followed by an exposition of the research design. The next part describes the population and sampling methods utilized. Afterwards, the choice of data collection method and measuring instrument are presented. A comprehensive discourse on data analysis methods precedes the conclusion of the methodology section.

3.2 Research approach

Scholars generally choose between qualitative or quantitative research approaches based on the research question to address. The qualitative research method employs case studies, life experiences and stories to discover new insights, ideas and new theories (Taherdoost, 2022). Quantitative research method is a systematic and structured approach to inquiry, which involves the utilization of pre-determined methods and instruments to answer the research question (Sam, 2012). The quantitative approach entails the measurement and analysis of variables to reach a conclusion (Apuke, 2017). The qualitative method of enquiry uses observation and interpretation to study the objects in their natural state while the quantitative approach studies variables and predict the results (Park & Park, 2016). According to the authors, quantitative research is used for the justification of research and qualitative research is good for the discovery of phenomena. This research employed a quantitative approach to investigate the research question.

The use of a quantitative approach in this study was suitable as it allowed for the identification of statistical relationships between variables, and the testing of hypotheses to make predictions. Additionally, the quantitative approach enables the generalization of results to the population, justifies the results, and emphasizes measurable variables.

The advantages of quantitative research, as noted by Sukamolson (2007) and Park and Park (2016), include unbiased nature, the ability to predict results and test hypotheses, the ability to generalize results to the population, the ability to justify results, and ability to emphasize measurable variables. Therefore, the use of a quantitative approach was deemed more appropriate for this research as it aimed to identify statistical relationships and test the significance of the hypothesis.

3.3 Research design

Quantitative research presents different approaches to enquiry such as surveys, descriptive research, experiments, correlation, and causal-comparative research. A survey method studies people's attitudes, beliefs, opinions and viewpoints and measures the qualities of a targeted population; descriptive research describes events using observations; experimental research studies the cause and effect of variables; correlational research measures the degree of the relationship between variables; and causal-comparative research seeks to understand the relationship between dependant and independent variables after something has happened (Hodge, 2020; Taherdoost, 2022).

For this research, a survey method was deemed to be the most suitable approach to enquiry. Surveys employ the scientific methods of sampling and questionnaire administration, making use of a survey instrument to collect data from a selected sample. This method is not only cost-effective but also allows respondents to complete the survey themselves (Hodge, 2020). Considering the financial and time constraints that were present, as well as the need to reach a wide audience, a survey using a cross-sectional method was determined to be the most appropriate for this study. Furthermore, a detailed explanation and justification for the chosen data collection and sampling methods will be presented in the subsequent section.

3.4 Population and sampling methods

3.4.1 *Population*

This investigation aims to analyse the influence of customer experience on satisfaction and loyalty at hair salons and spas in South Africa. With a population of approximately 60,14 million individuals dispersed across the nation's nine provinces, it is noteworthy that the largest concentration of people (26.3%) resides in the Gauteng province (South African Government, 2023). Gauteng is considered the economic hub of South Africa due to the high concentration of business opportunities and its contribution of 40% of gross domestic production (GDP) to the entire South African (Nhamo, Mpandeli, & Hlophe-Ginindza, 2021).

The study focuses on the customer experience of people between the of 18 and 45 who have visited a hair salon or spa in South Africa. People younger than the age of 18 are considered children because they have not yet reached maturity age or adulthood. According to Icenogle et al. (2019), people reach cognitive capacity at the age of 16 and only reach psychological maturity by the age of 18. People younger than the age of 18 were excluded from the study to avoid legal issues of minors consenting to partake in the study.

3.4.2 *Sampling method*

There are two types of sampling design in research namely probability sampling and non-probability sampling. Probability sampling allows for the generalisation of results to the population, is unbiased and most costly to carry out (Sharma, 2023). Non-probability sampling is a biased, subjective method of sample selection based on the judgement of the researcher (Berndt, 2020). This study utilized a probability sampling method, where respondents were selected by chance to eliminate biases. Probability sampling is more suitable for quantitative research (Sharma, 2023).

To delimit the study, a sampling frame was adopted, ensuring specificity and manageability. The absence of a sampling frame can pose significant challenges in primary data collection (Burgess & Steenkamp, 2006). The scope of the study was

limited to the Gauteng province, as it has the largest population and is the economic hub of South Africa, with many people migrating to Gauteng for work and a better life. The study targeted individuals between the ages of 18 and 45 who had received a beauty service such as hairdressing, manicure, pedicure, waxing and facial grooming services within the last six months before the research. The study did not focus on a specific gender split, as demographic characteristics are not deemed significant in determining satisfaction with a service (Chingang Nde & Lukong, 2010).

Table 3: Sample description

Category of respondents	**Description**
Gender	All
Region	Gauteng
Age	18 – 45 years

3.5 Data collection method

Part of the research process includes collecting data to answer the research question. Two types of data used in research are primary data and secondary data. Primary data is new data that is collected first-hand for the specific research undertaken, and secondary data is data that was collected in the past for different research and is now readily available for use (Kumari, 2022). This study used primary data. Primary data is most accurate because it is collected specifically to answer the research question. In South Africa, the widespread use of the Internet allowed for data collection through digital platforms, eliminating the time-consuming process of physically transporting the questionnaire to the sample.

A questionnaire is a data collection instrument which contains a set of predetermined questions used to collect data from respondents to answer a research problem (Aithal & Aithal, 2020). The choice of an online and self-administered questionnaire enabled the respondents to complete the survey in the comfort of their own homes, in real time. The link to the questionnaire was attached to an email sent to the sample to complete the survey remotely. The list of email addresses was sourced from the university

database. Ethical consideration was adhered to by requesting permission to access the student database from the university administrator. To ensure effective communication, the standard language used in the questionnaire was English, which is the official language in South Africa and the language most understood by people from other ethnic groups.

The link that was attached to the emails sent directed the respondents to the questionnaire in Qualtrics, an experience management system where they completed the survey. The questionnaire was set up to only allow one response per person. The study targeted 294 samples and a total of 416 responses were collected from the questionnaire. The reason for sample size is based on the requirements of the measuring instrument which is discussed in the next section titled measuring instrument. Thereafter, the responses were prepared for analysis on SPSS.

3.6 Measuring instrument

Customer experience is often measured in various ways, depending on the specific context of the study. Klaus and Maklan (2013) have questioned the suitability of customer satisfaction as a comprehensive measure of the customer experience. Instead, the authors propose that customer experience quality (EXQ) is a more accurate indicator of customer experience. Roy (2018) and Palmer (2010) concur with this view, emphasizing that there is no single, ideal scale for measuring customer experience with a broad definition of the concept.

Based on these arguments, it is essential to develop alternative measures of customer experience using other constructs to better understand their impact on customer satisfaction and loyalty. Customer satisfaction is a critical metric that assesses the level of service quality received from a provider or business. It is typically evaluated using customer experience rating scales that inquire about the satisfaction level of customers. The main contributors to customer satisfaction include service quality, speed of service, staff expertise, and the overall environment in which the service is delivered, known as servicescape.

In this study, the EXQ scale developed by Klaus and Maklan (2013) was adopted to measure experience quality. The instrument comprises a 7-point Likert scale (1 = strongly disagree, 2 = disagree, 3 = somewhat disagree, 4 = neutral, 5 = somewhat agree, 6 = agree, and 7 = strongly agree) to assess the various elements of the customer experience. The instrument is based on previous studies by authors listed in Table 4.

Table 4: Rating scale

Construct	**Scale**	**Reference**
Customer satisfaction	Consumer experience	Knutson and Beck (2004)
Service scape	Experience quality Customer experience on the Bank Scale	Chang and Horng (2010) Garg et al. (2014)
Speed of service	Waiting experience Customer experience on the Bank Scale Online customer experience	Durrande-Moreau and Usunier (1999) Garg et al. (2014)

Table 5: Methodology terms

Reference	**Methodology**	**Definition**
Taherdoost (2022)	Quantitative method	The qualitative research method employs case studies, life experiences and stories to discover new insights, ideas, and new theories.
Taherdoost (2022)	Survey	A scientific method is used to study individuals' attitudes and beliefs and measure the qualities of a targeted population.
Kumari (2022)	Primary data and secondary data	Primary data is new data that is collected first-hand for the specific research undertaken, and secondary data is data that was collected in the past for different research and is now readily available for use.
Aithal and Aithal (2020)	Questionnaire	A questionnaire is a data collection instrument which contains a set of predetermined questions used to collect data from respondents to answer a research problem.

3.7 Data analysis methods

The primary objective of quantitative research is to establish and validate statistical relationships between variables through the employment of scientific methods to analyse data (Apuke, 2017). Albers (2017) asserts that data analysis is a crucial aspect of research, as it enables the identification of trends, patterns, and correlations between the data collected and the research context. In this study, the Statistical Package for Social Sciences (SPSS) and AMOS software were utilized to analyse the collected data, resulting in the drawing of conclusions.

3.7.1 Descriptive statistics

3.7.1.1 Frequencies

Frequencies were employed to analyse single-response questions to comprehend the dispersion and frequencies of varied responses for each variable. The utilization of frequencies enables the assignment of values to responses, thereby facilitating analysis (Wiid, 2009). Nominal values were ascribed to gender groups and the frequency of visits to the salon to discern disparities between elements. The application of frequencies was aimed at achieving Objective 1, which was *to evaluate antecedents of customer experience, satisfaction, and loyalty in South African hair salons and spas.*

3.7.1.2 Custom tables, means, and standard deviations

Kaushik and Mathur (2014) expounded upon the utilization of custom tables, means, and standard deviations as statistical methods within the ambit of descriptive statistics, which are employed to compile information regarding a sample. Furthermore, the aforementioned techniques are suggested as a straightforward means of organizing extensive data in an easily manageable manner. Custom tables, means, and standard deviations were deployed to accomplish objective number one.

3.7.2 Validity and Reliability

The quality of measuring instruments is typically evaluated through reliability and validity (Kimberlin & Winterstein, 2008). Validity testing is crucial to instrument measurement, ensuring it accurately captures the intended construct. According to Sürücü and MASLAKÇI (2020), validity refers to the instrument's ability to provide meaningful and appropriate results. In quantitative research, where results are generalized to the population, validity is of utmost importance (Hayashi Jr, Abib, & Hoppen, 2019). While validity is essential in all types of research, its significance is particularly emphasized in quantitative research. The instrument was tested for both validity and reliability as stated below. SEM tools enables the assessment of models for validity and reliability, thereby gauging the quality of the measuring instrument employed in research. The quality of the study, and the accuracy of results, are ensured by testing instrument validity and reliability.

3.7.2.1 Construct validity

This study employed pre-existing questions that had been validated and established measurement scales to ensure the convergent and discriminant validity of the selected constructs. Convergent validity, which pertains to the accuracy of measurements of a construct, and discriminant validity, which refers to the distinctiveness of a construct across different variables, are critical indicators of construct validity and serve to confirm and clarify the research-derived conceptualization of the constructs (Sürücü & MASLAKÇI, 2020).

3.7.2.2 Confirmatory factor analysis

Confirmatory Factor Analysis (CFA) was employed to assess construct validity. The objective of CFA is to evaluate a model, verify specific hypotheses, refine an existing model, or test a series of related models. CFA was undertaken utilizing IBM Amos version 25, to evaluate the validity and reliability of the constructs and determine the degree to which the observed variables represented the latent constructs. A noteworthy coefficient indicates that the instrument in question is dependable (Kimberlin & Winterstein, 2008).

3.7.2.3 Reliability analysis

Reliability analysis, which utilizes statistical methods to gauge the consistency and stability of an instrument's scores across multiple administrations, is a crucial aspect of instrument validation. By assessing the internal consistency of the instrument, it is possible to determine whether the tool provides the expected and correct scores as intended when used at different times for the same sample (Kimberlin & Winterstein, 2008). Wiid (2009) asserts that reliability testing is used to evaluate the consistency of a measure in producing the same values.

This study employed two strategies to ensure the reliability of the instrument. Firstly, it was ensured that enough responses were collected per construct to meet the minimum required sample. This was achieved by multiplying the item in a construct by the number on the Likert scale. In this case, a 7-point Likert scale was employed, resulting in a multiplication of 7 by 6 (items) to obtain 42 responses per construct, which ultimately yielded a total of 294 minimum samples for the research.

Secondly, Cronbach's alpha was employed to assess the instrument's internal consistency, with the SPSS setup designed to evaluate the relatedness of the items within the instrument. While the reliability of the instrument indicates its consistency with the results, it does not guarantee correct results. As such, it is essential to test the instrument for both validity and reliability, as a reliable instrument is not necessarily valid (Sürücü & MASLAKÇI, 2020).

3.7.3 Inferential statistics

3.7.3.1 Independent T-test

The application of an independent T-test was utilized to contrast the mean values of the two groups (Marshall & Jonker, 2011). A T-test was carried out to establish whether statistically significant discrepancies exist between genders and customer types, with regard to the perception of experience, satisfaction, and loyalty, between novice and experienced customers.

3.7.3.2 One-way ANOVA

Analysis of Variance (ANOVA) is a statistical technique that is utilized to examine differences in mean variations between at least three groups, as per the nomenclature (T. K. Kim, 2017). The investigation employed a One-way ANOVA to achieve objective number 2, which was *to assess the differences in perception of experience, satisfaction, and loyalty across genders and years of experience in the beauty industry.*

3.7.3.3 Correlational analysis

Correlational analysis is a statistical approach that is often employed to evaluate the strength and direction of the relationship between variables (Prematunga, 2012). In this study, correlational analysis was utilized to examine the associations between customer experience, satisfaction, and loyalty. This technique is useful for comprehending the magnitude of these relationships.

3.7.3.4 Structural Equation Modelling (SEM)

SEM tools were utilized to analyse survey data to achieve Objective 3, which was *to investigate the effects of customer experience on satisfaction and loyalty in the beauty industry*. SEM is a causal analysis technique that is used to examine the relationship between independent and dependent variables (Ullman & Bentler, 2012). The model was used to confirm the predicted relationship between variables, as indicated in the hypothesis. SEM tools determine (i) how well the model describes the data and (ii) the specific effects of the model (Y. A. Wang & Rhemtulla, 2021). These tools are sensitive to sample size and require a sufficiently large sample size to obtain good results (Savalei & Bentler, 2006). A minimum sample size of 200 is typically required to use SEM tools, and this study analysed 347 responses to comply with sample requirements.

3.8 Ethical considerations

The utmost consideration was afforded to the execution of this study, with the highest level of dignity and respect shown towards respondents throughout the data collection

process. No participant was compelled to take part in the investigation, and all respondents were informed of their right to withdraw from the questionnaire at any time. Confidentiality was always maintained, with the data collected and information about the respondents treated with the utmost sensitivity to protect their privacy. Respondents were provided with a write-up of ethical considerations to inform them of how their participation and data would be handled throughout the study.

3.9 Conclusion of research methodology

This chapter outlines the methods of inquiry utilized in this research. The research employed a quantitative approach, and to this end, the convenience sampling method was employed to select the sample from the population. The population in question comprised South Africans, and the sample comprised Gauteng residents between the ages of 18-45. A survey method was utilized to collect data, and a questionnaire was distributed to participants via online platforms. The data was analysed using the SPSS software package, and descriptive and inferential statistical techniques were employed to meet the research objectives. The methodology section concludes by addressing ethical considerations that were observed during this research.

CHAPTER 4: RESEARCH RESULTS

4.1 Introduction

Chapter four presents the results of a meticulous analysis of the data following the survey. Initially, the data was scrutinized to eliminate invalid responses due to spoilt surveys and other factors. Tables and figures were utilized to illustrate the results. The section also includes a brief discussion of validity and reliability issues experienced during data analysis.

4.2 Data screening

Data screening was executed on the 416 responses received from the survey. Out of the entirety of 416 responses, one incomplete response was removed, 32 responses were above the age of 45, and 36 responses resided outside of Gauteng. Hence, a total of 69 responses were eliminated from further examination as they did not conform to the parameters of the study. Consequently, 347 responses were included in the analysis.

4.3 Sample characteristics

4.3.1 Age

Figure 3 depicts the age distribution of the respondents and indicates that 35% of them were between the ages of 18 and 25 years, 37% were between the ages of 26 and 35 years, and 28% were between the ages of 36 and 45 years.

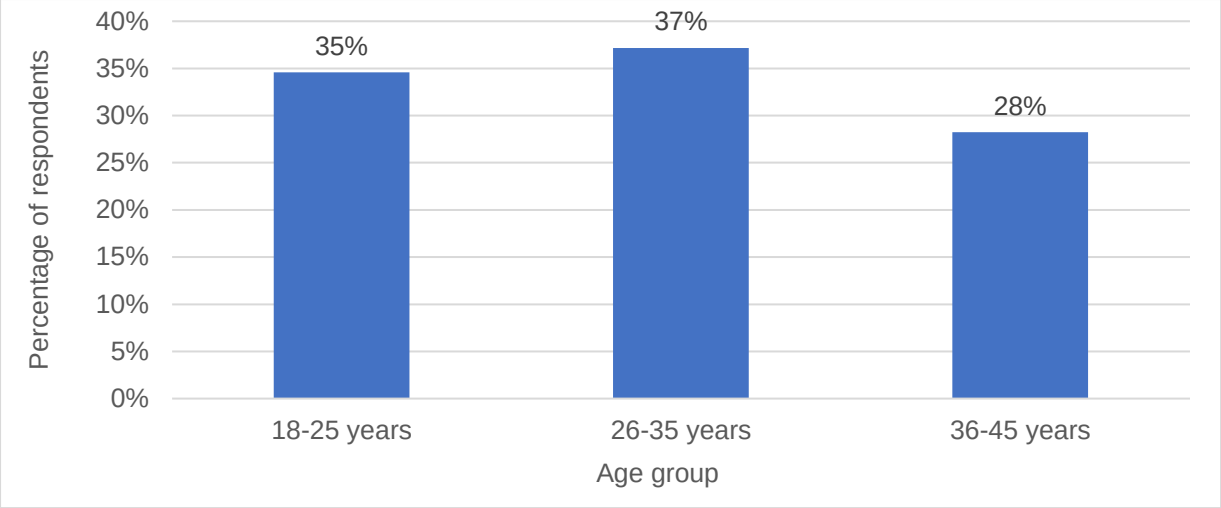

Figure 3: Age group analysis

4.3.2 Gender

Figure 4 illustrates the gender distribution and indicates that females constituted the majority at 72%, compared to males who comprised 28% of the responses.

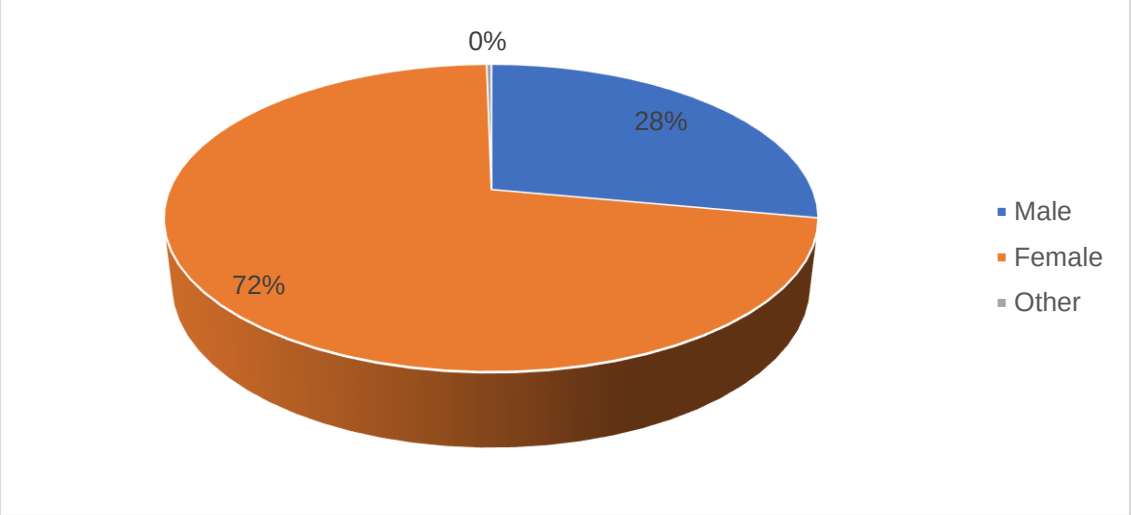

Figure 4: Gender analysis

4.3.3 *Service provider visited*

Figure 5 indicates that a substantial proportion of respondents (90%) had patronized salons within the preceding six months, as opposed to spas (10%).

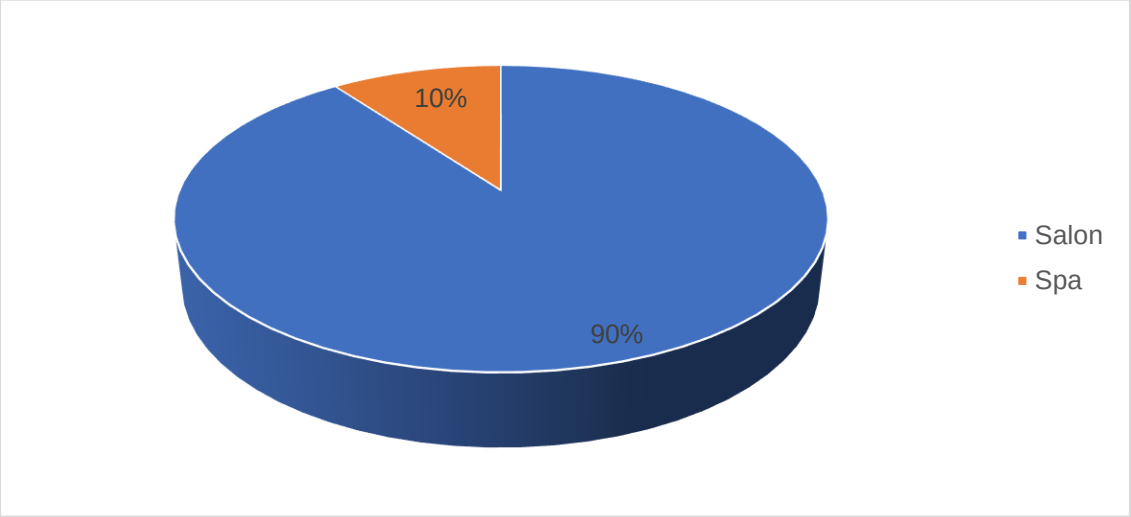

Figure 5: Service provider visited in the past six months

4.3.4 *Frequency of visiting service provider*

More than half of the respondents (52%), as shown in Figure 6, indicated that they had visited Salons or Spas four times or more in the past six months. The remaining respondents visited the service provider three or fewer times.

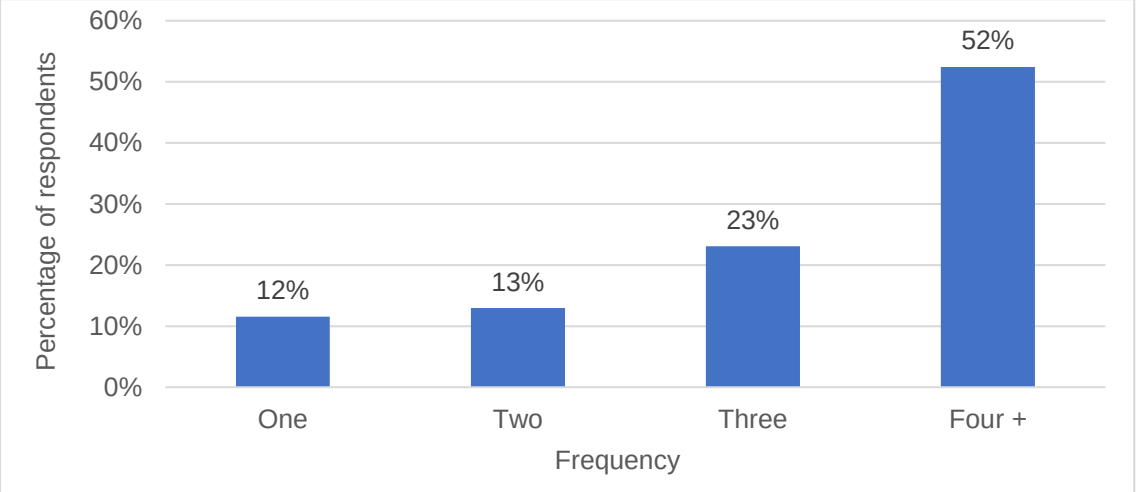

Figure 6: Frequency of visiting service provider

4.3.5 *Frequency of visit by service provider visited*

Figure 7 illustrates that the survey respondents frequented salons more often than spas. This is demonstrated by the data, which shows that 56% of those who visited a salon had done so on four or more occasions, compared to only 20% of respondents who visited a spa four or more times. These differences are statistically significant, with a chi-square p-value of 0.000.

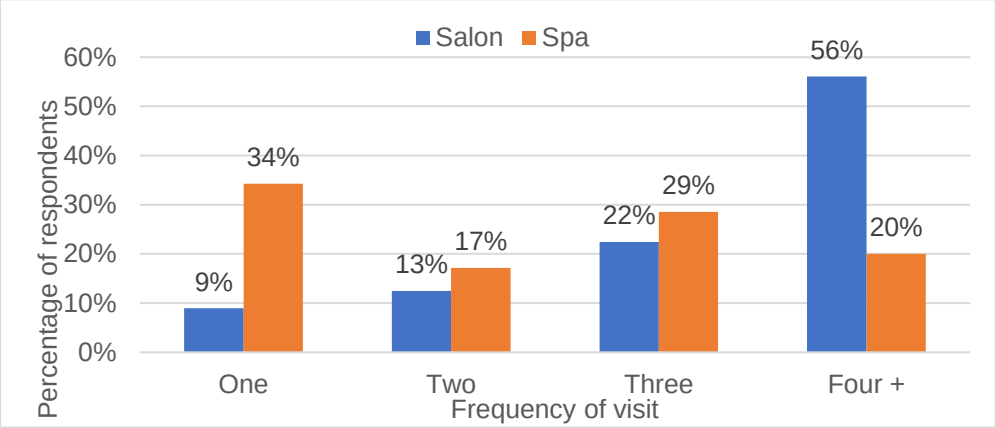

Figure 7: Frequency of visit by service provider visited

4.3.6 *Spend in the last six months*

According to the survey results, approximately one in every three respondents (27%) reported spending less than R500 at salons and spas over the past six months. The remaining data is presented in Figure 8.

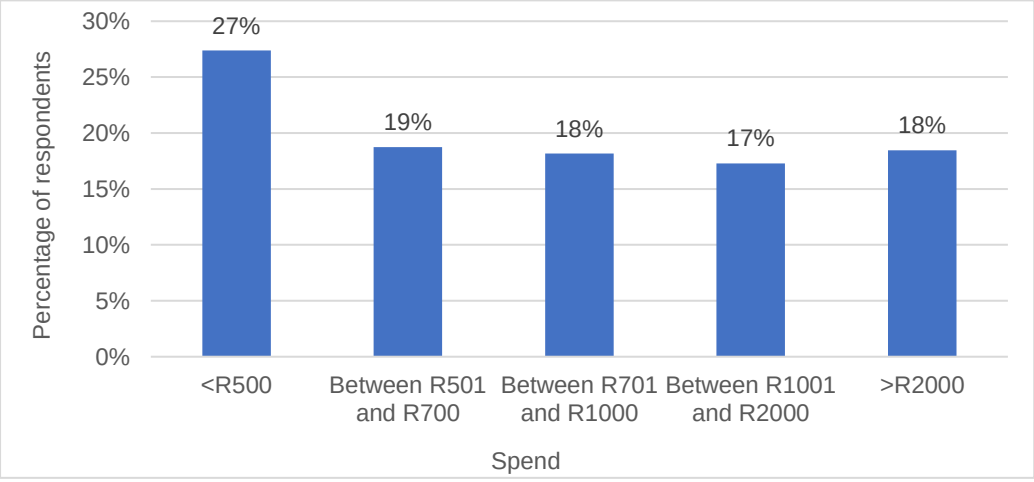

Figure 8: Spend in the last six months

4.4 Descriptive statistics

Table 6: Servicescape

The table below represents the perception of the servicescape at the salon and spas. The results show high strengths in elements such as comfort in space design (66%), modern equipment (67%) and ease of navigation (73%). A significant portion of respondents (48%) indicated that the aesthetics in the establishment was unappealing.

Item	Description	Strongly disagree - Somewhat disagree	Neutral	Somewhat agree - Strongly agree	Mean	SD
SS1	The space design of this salon/spa makes me feel comfortable	17%	17%	66%	5.13	1.61
SS2	The salon/spa have up-to-date equipment	19%	14%	67%	5.02	1.65
SS3	The ambient conditions such as temperature, ventilation, noise, and odour are good	27%	13%	60%	4.71	1.81
SS4	The signs, symbols, advertisements, boards, pamphlets, and other artefacts are properly placed	24%	18%	58%	4.71	1.79
SS5	The decoration in this salon/spa is not appealing	48%	19%	33%	3.63	1.84
SS6	Overall, this facility layout makes it easy to get where you want to go	14%	14%	73%	5.27	1.48

Table 7: Staff Expertise

The table below depicts respondents' perception of staff expertise at the service provider. The results in the table below suggest strong agreement concerning staff experience (84%), capability (77%), efficiency (80%), and overall knowledge (78%). A significant portion (60%) believe they did not get a personalised service.

Item	Description	Strongly disagree - Somewhat disagree	Neutral	Somewhat agree - Strongly agree	Mean	SD
SE1	The staff in this establishment are experienced	6%	10%	84%	5.75	1.30
SE2	The staff are capable enough to deliver error-free services	15%	9%	77%	5.33	1.54
SE3	The staff are efficient	10%	10%	80%	5.55	1.34
SE4	The staff have the knowledge to respond to problems	10%	12%	78%	5.48	1.42
SE5	The staff does not give me personalized attention	60%	12%	28%	3.31	1.85
SE6	I feel the staff understands my needs	9%	11%	80%	5.55	1.39

Table 8: Speed of service

The results below represent how customers perceive the timeliness of service provided. The majority of respondents agreed that the service was provided on time (74%) and that waiting time was kept to a minimum (68%). A significant portion of customers (73%) agreed that the speed of service was acceptable.

Item	Description	Strongly disagree - Somewhat disagree	Neutral	Somewhat agree - Strongly agree	Mean	SD
SpS1	The service provider delivers its promises on time	14%	12%	74%	5.30	1.56
SpS2	The waiting time was kept to a minimum	21%	12%	68%	5.06	1.75
SpS3	The service took longer than planned	49%	13%	38%	3.71	1.92

SpS4	The appointment system is effective	24%	18%	59%	4.74	1.93
SpS5	There were no delays to the service process	29%	14%	57%	4.70	1.92
SpS6	Generally, the speed of service is acceptable	13%	14%	73%	5.31	1.57

Table 9: Customer experience

The table below describes the overall experience at the spa and hair salon. A significant portion (82%) felt their expectations were covered and overall comfortable with the service provider (84%). Eighty-one per cent of respondents agreed that the experience was overall pleasant.

Item	Description	Strongly disagree - Somewhat disagree	Neutral	Somewhat agree - Strongly agree	Mean	SD
CE1	It is a pleasure for me to use this service provider	8%	16%	76%	5.49	1.42
CE2	This service provider meets my needs and covers my expectations	9%	10%	82%	5.55	1.32
CE3	I feel comfortable when I interact with this service provider	6%	10%	84%	5.71	1.26
CE4	The service provider handles customer problems well	9%	15%	76%	5.46	1.31
CE5	I don't feel that this service provider really cares about keeping me as a customer	66%	12%	22%	2.97	1.82
CE6	My overall experience was pleasant	6%	13%	81%	5.65	1.33

Table 10: Customer satisfaction

The table below shows customer satisfaction levels with the service provided. A significant portion of respondents (77%) felt the service provider put them in a good mood and therefore had positive feelings towards the service provider. 83% of respondents felt overall satisfaction with the service provider.

Item	Description	Strongly disagree - Somewhat disagree	Neutral	Somew hat agree - Strongly agree	Mean	SD
CS1	The service provided was of a high standard	15%	15%	69%	5.22	1.56
CS2	The service I received exceeded my expectations	18%	21%	60%	4.87	1.62
CS3	My feelings towards the service provider are very positive	9%	14%	77%	5.46	1.39
CS4	Overall, I am satisfied with the service I received	6%	11%	83%	5.62	1.31
CS5	I feel that the service provider could produce better results for me	28%	17%	55%	4.68	1.78
CS6	The overall feeling I get from the service provider puts me in a good mood	7%	17%	77%	5.49	1.35

Table 11: Perceived price

This table summarizes the respondents' perceptions regarding various aspects of pricing offered by the service provider. Though the results suggest a positive perception regarding value for money (80%) and price fairness (76%), a significant portion of respondents (78%) agree that the price affects their decision-making.

Item	Description	Strongly disagree - Somewhat disagree	Neutral	Somew hat agree - Strongly agree	Mean	SD
PP1	The price matches the service quality	14%	7%	80%	5.44	1.57
PP2	The price is affordable	20%	11%	69%	5.15	1.65

PP3	In relation to the service provided, the price is fair	13%	11%	76%	5.37	1.53
PP4	Prices affect my decision making	13%	10%	78%	5.50	1.63
PP5	The service provider does not provide discounted prices	36%	15%	49%	4.39	1.99
PP6	The prices may be more expensive than other service providers	39%	19%	42%	4.16	1.93

Table 12: Customer loyalty

The table below displays respondents' attitudes regarding their loyalty perceptions towards the service provider. The results suggest high levels of satisfaction (m:5.69) with the willingness to visit the service provider again and to maintain the relationship with the service provider. The majority of respondents (76%) expressed loyalty to the service provider.

Item	**Description**	**Strongly disagree - Somewhat disagree**	**Neutral**	**Somewhat agree - Strongly agree**	**Mean**	**SD**
CL1	I am willing to visit this service provider again	8%	11%	81%	5.69	1.50
CL2	I highly recommend the service provider to other people	11%	13%	76%	5.50	1.56
CL3	I intend to continue getting a service from the service provider	8%	10%	81%	5.67	1.48
CL4	I don't consider this service provider as my first choice for beauty services	59%	11%	29%	3.37	2.00
CL5	I am willing to maintain my relationship with the service provider	6%	11%	82%	5.69	1.31
CL6	I am loyal to this service provider	13%	15%	72%	5.33	1.58

4.5 Validity

Table 13 displays the items that were reversed in scale before conducting the CFA. This was due to the negative wording of the items, where 1 represented 7, 2 represented 6, 3 represented 5, 4 represented 4, 5 represented 3, 6 represented 6, and 7 represented 1.

Table 13: Items that had scale reversed

Item	Description
SS5	The decoration in this salon/spa is not appealing
SE5	The staff does not give me personalized attention
SpS3	The service took longer than planned
CE5	I don't feel that this service provider really cares about keeping me as a customer
CS5	I feel that the service provider could produce better results for me
PP5	The service provider does not provide discounted prices
PP6	The prices may be more expensive than other service providers
CL4	I don't consider this service provider as my first choice for beauty services

The hypothesised CFA model is presented in Figure 9.

SEM model showing output loading.

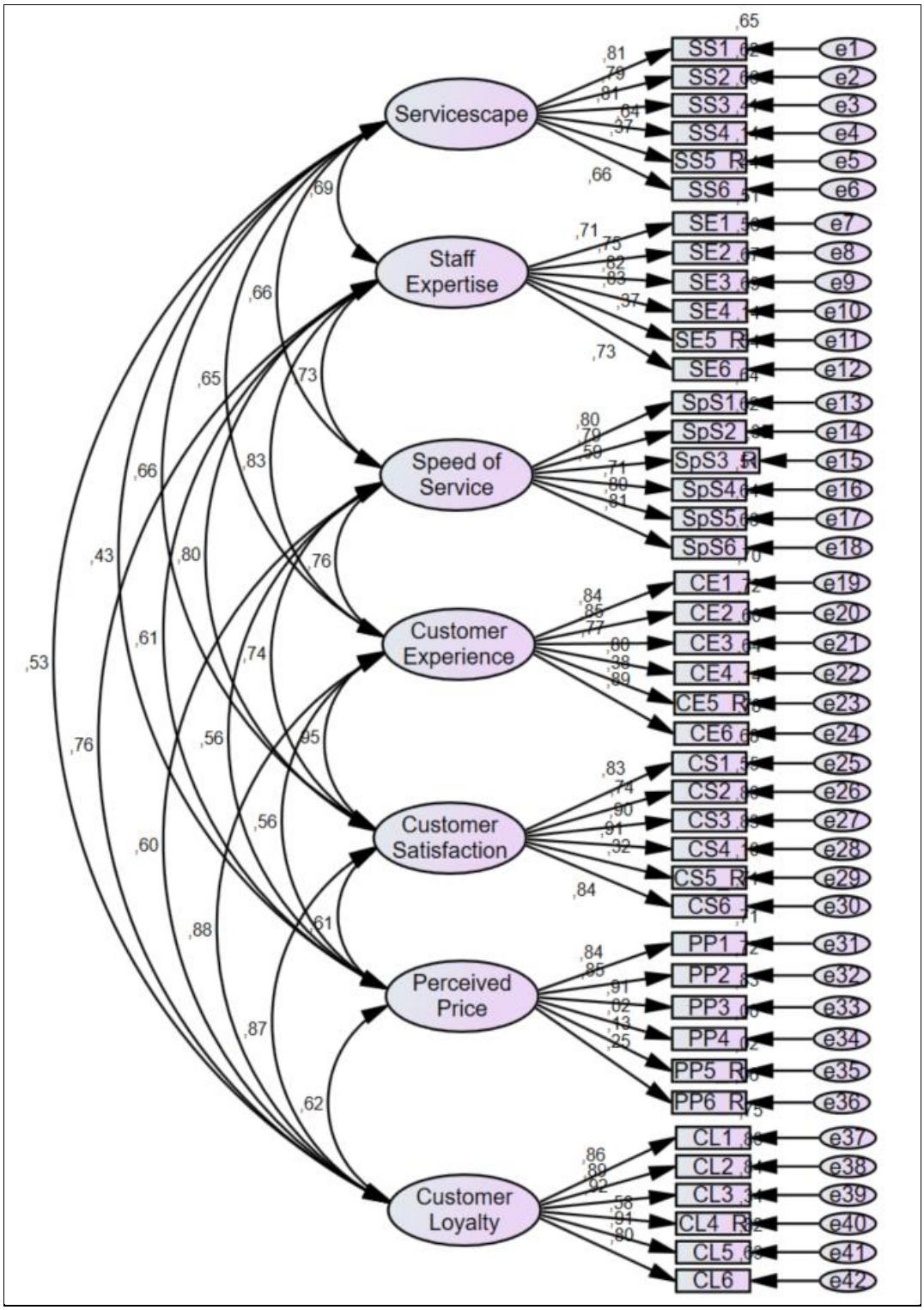

Figure 9: Hypothesised model

Table 14 displays those items that either exhibited low factor loadings or were multiplied by more than one factor, leading to their exclusion through CFA. Such items are characterized by weak factor loadings, indicating minimal influence on the variable in question. It is possible that these items are closely related to the latent variables, or that the wording of the items was inappropriate, leading to inconclusive results. Regardless of the reason, these items were found to have an insignificant impact on the results and were therefore removed from further examination.

Table 14: Items eliminated during CFA

Item	**Description**
SS5_R	The decoration in this salon/spa is not appealing
SS6	Overall, this facility layout makes it easy to get where you want to go
SE5_R	The staff does not give me personalized attention
SpS3_R	The service took longer than planned
CE5_R	I don't feel that this service provider really cares about keeping me as a customer
CS5_R	I feel that the service provider could produce better results for me
PP4	Prices affect my decision making
PP5_R	The service provider does not provide discounted prices
PP6_R	The prices may be more expensive than other service providers
CL4_R	I don't consider this service provider as my first choice for beauty services

4.5.1 Pruned model

Figure 10 depicts the pruned model, in which all factor loadings surpassed the threshold of 0.6.

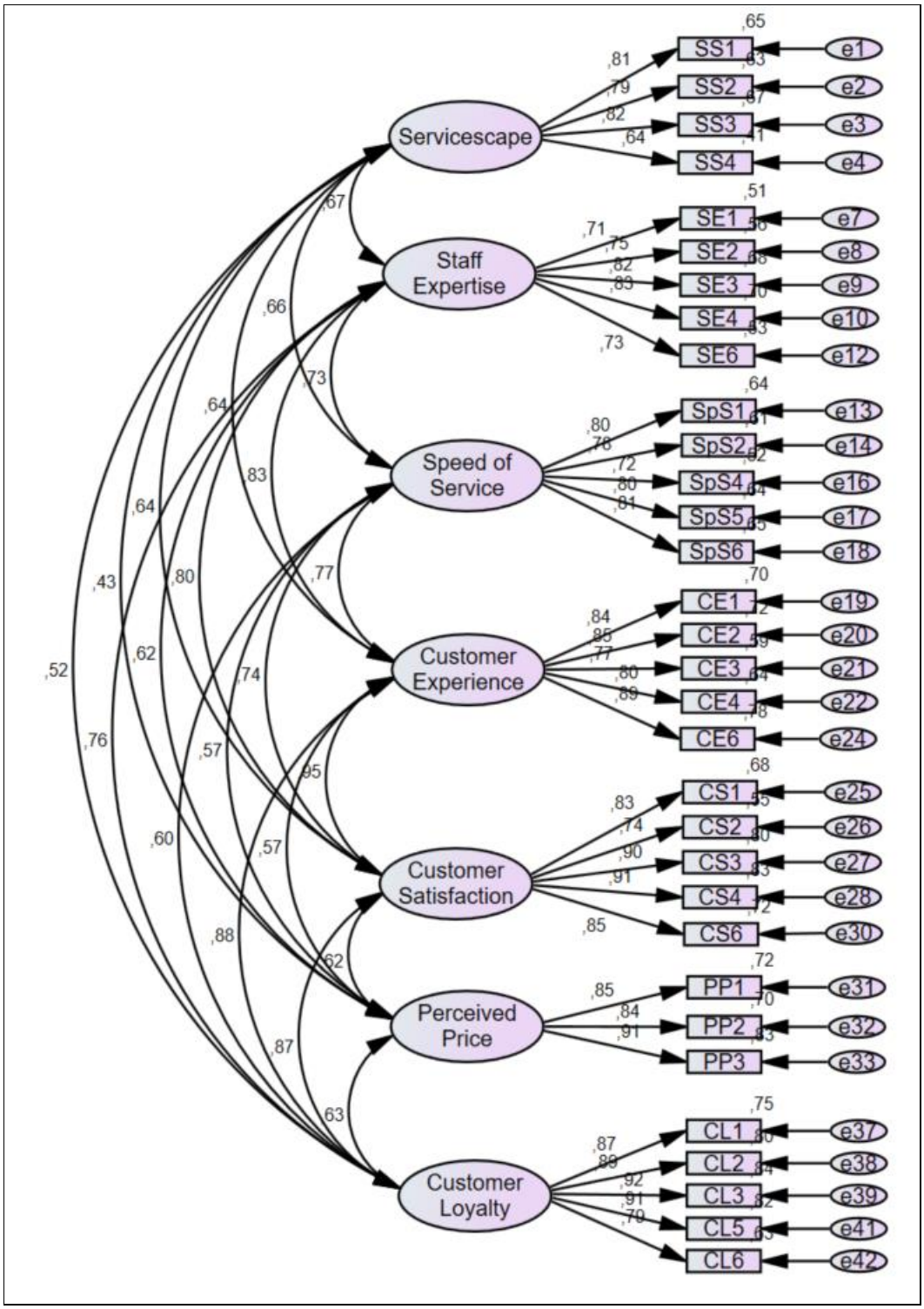

Figure 10: Pruned CFA model

Below are the final items retained in the model, their factor loadings, the CR values, and Cronbach's alpha values after pruning, as summarised in Table 15.

Table 15: Final CFA results – construct composition

Item	Description	Factor Loading	CR	α
Servicescape			**0.851**	**0.847**
SS1	The space design of this salon/spa makes me feel comfortable	,809		
SS2	The salon/spa have up-to-date equipment	,792		
SS3	The ambient conditions such as temperature, ventilation, noise, and odour are good	,820		
SS4	The signs, symbols, advertisements, boards, pamphlets, and other artifacts are properly placed	,639		
Staff Expertise			**0.880**	**0.877**
SE1	The staff in this establishment are experienced	,713		
SE2	The staff are capable enough to deliver error-free services	,751		
SE3	The staff are efficient	,823		
SE4	The staff have the knowledge to respond to problems	,834		
SE6	I feel the staff understands my needs	,731		
Speed of Service			**0.887**	**0.884**
SpS1	The service provider delivers its promises on time	,799		
SpS2	The waiting time was kept to a minimum	,783		
SpS4	The appointment system is effective	,723		
SpS5	There were no delays to the service process	,798		
SpS6	Generally, the speed of service is acceptable	,806		
Customer Experience			**0.917**	**0.917**
CE1	It is a pleasure for me to use this service provider	,839		
CE2	This service provider meets my needs and covers my expectations	,851		
CE3	I feel comfortable when I interact with this service provider	,771		
CE4	The service provider handles customer problems well	,798		
CE6	My overall experience was pleasant	,886		
Customer Satisfaction			**0.926**	**0.922**
CS1	The service provided was of a high standard	,825		

Item	Description	Factor Loading	CR	α
CS2	The service I received exceeded my expectations	,740		
CS3	My feelings towards the service provider are very positive	,897		
CS4	Overall, I am satisfied with the service I received	,913		
CS6	The overall feeling I get from the service provider puts me in a good mood	,846		
Perceived Price			**0.900**	**0.898**
PP1	The price matches the service quality	,848		
PP2	The price is affordable	,839		
PP3	In relation to the service provided, the price is fair	,910		
Customer Loyalty			**0.943**	**0.940**
CL1	I am willing to visit this service provider again	,866		
CL2	I highly recommend the service provider to other people	,894		
CL3	I intend to continue getting a service from the service provider	,917		
CL5	I am willing to maintain my relationship with the service provider	,905		
CL6	I am loyal to this service provider	,794		

The CR values exceeded the minimum required value of 0.7 across all constructs, indicating a high level of reliability. Furthermore, the AVE values were all greater than 0.5, indicating strong convergent validity.

Discriminant validity was attained when the MSV value was lower than the AVE value, as evidenced by the Servicescape, Perceived Price, and Speed of Service. However, issues arose with discriminant validity for customer loyalty, customer experience, customer satisfaction, and staff expertise, with the MSV values greater than the AVE values. Despite this, the model was not refined as no further refinement led to an enhancement of the model.

Table 16: Construct reliability and validity

	CR	AVE	MSV	MaxR(H)
1.Servicescape	0.851	0.591	0.445	0.863
2.Customer Loyalty	0.943	0.768	0.773	0.949
3.Perceived Price	0.900	0.750	0.394	0.907
4.Customer Experience	0.917	0.689	0.906	0.922
5.Speed of Service	0.887	0.612	0.590	0.890
6.Customer Satisfaction	0.926	0.716	0.906	0.937
7.Staff Expertise	0.880	0.596	0.686	0.887

Table 17 displays the descriptive statistics and correlation matrix of the constructs. The diagonal elements of the Fornell-Larcker Criterion Correlations for Servicescape, Perceived Price, and Speed of Service were significantly higher than the off-diagonal elements, indicating that these constructs have discriminant validity. This finding confirms discriminant validity for Servicescape, Perceived Price, and Speed of Service.

Table 17: Descriptive statistics and Fornell-Larcker criterion correlations

	Mean	SD	1.	2.	3.	4.	5.	6.	7.
1.Servicescape	4.89	1.42	**0.769**						
2.Customer Loyalty	5.58	1.34	0.515	**0.876**					
3.Perceived Price	5.32	1.44	0.430	0.628	**0.866**				
4.Customer Experience	5.57	1.15	0.636	0.879	0.573	**0.830**			
5.Speed of Service	5.02	1.45	0.658	0.605	0.566	0.768	**0.782**		
6.Customer Satisfaction	5.33	1.27	0.641	0.867	0.621	0.952	0.745	**0.846**	
7.Staff Expertise	5.53	1.15	0.667	0.761	0.616	0.828	0.732	0.799	**0.772**

The results presented in Table 18 demonstrate that the RSMEA value of 0.070, TLI of 0.913, CFI of 0.922, and CMIN/DF of 2.701 were all within the acceptable range. In contrast, the NFI of 0.882, GFI of 0.846, and AGFI of 0.816 were slightly below the acceptable range. It is concluded that the model provided a good fit for the data, given

that most indices were within the acceptable range. No improvement was observed upon further pruning of the model.

Table 18: Model fit indices

Absolute Fit Indexes	**Acceptable Value**	**Value**	**Outcome**
GFI	>0.9	0.821	Slightly below acceptable range
AGFI	>0.9	0.787	Slightly below acceptable range
RSMEA	<0.08	0.070	Acceptable
NFI	>0.9	0.882	Slightly below acceptable range
NNFI (TLI)	>0.9	0.913	Acceptable
CFI	>0.9	0.922	Acceptable
CMIN/DF	< 5	2,701	Acceptable

4.6 Hypothesis testing

SEM was employed utilizing the items retained in the streamlined CFA model to evaluate the causal effect, as depicted in Figure 11.

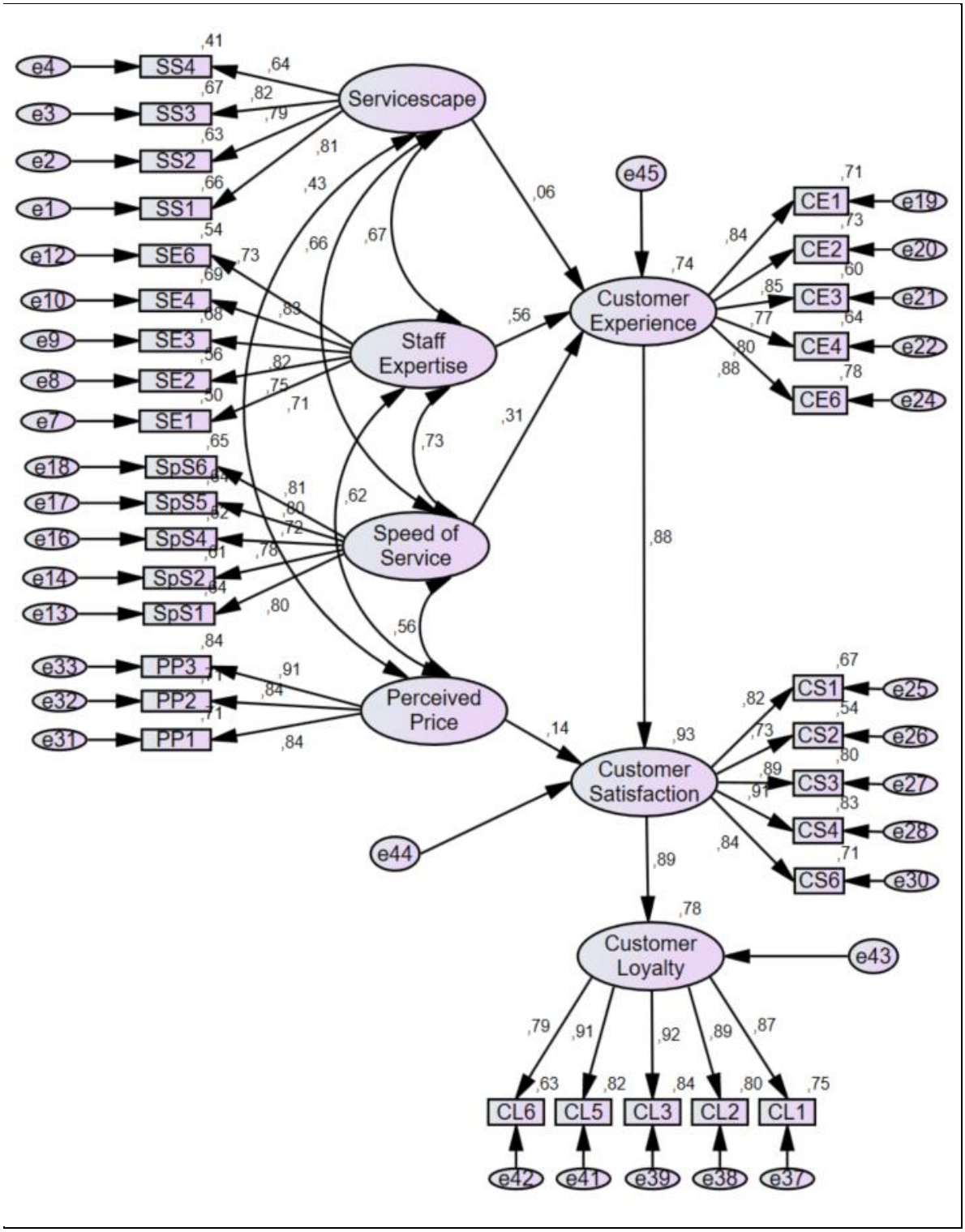

Figure 11: SEM model

Table 19: SEM model – standardised regression weights

Hypotheses / Path Analysis			Standardised Estimate	T-values	P-values	R-square
Servicescape	→	Customer Experience	,061	1,163	,245	0.741
Staff Expertise	→	Customer Experience	,559	7,842	***	
Speed of Service	→	Customer Experience	,310	4,923	***	
Customer Experience	→	Customer Satisfaction	,885	16,911	***	0.934
Perceived Price	→	Customer Satisfaction	,137	4,484	***	
Customer Satisfaction	→	Customer Loyalty	,886	17,223	***	0.785
SEM Fit Indices: x^2 = (1243.91); x^2/df = 2.752; RMSEA = .071; CFI = .918, TLI = .910; AGFI = .783; GFI = .814; NFI = .878 ***P < 0.001						

Results pertaining to H1: Servicescape has a significant impact on customer experience.

H0: There is no significant relationship between servicescape and customer experience.

H1: Servicescape has a significant impact on customer experience.

Table 19 reveals that the influence of servicescape on customer experience is insignificant (β = 0.61, t-value = 1.163, p-value = 0.245). The p-value was utilized to determine the statistical significance of the relationship between the two variables. In this case, an alpha threshold of 5% was employed to examine the significance level of the relationship. If the p-value is less than 0.05, the relationship is deemed significant. Conversely, if the p-value is greater than 0.05, the relationship is found to be insignificant. The p-value greater than 0.05 renders the relationship insignificant, indicating that the null hypothesis cannot be rejected at the 5% significance level. Therefore, there is insufficient evidence to suggest that servicescape has a noteworthy impact on customer experience.

The results presented in table 20 indicate that no significant variations in the coefficients for Servicescape were observed across various segments. This suggests that the servicescape factors have a consistent impact on the customer experience regardless of the gender of the customers.

Table 20: Servicescape and customer experience across genders and service providers

			Standardised Estimates			
Hypotheses / Path Analysis			Males	Females	Salon	Experienced
Servicescape	→	Customer Experience	,081	,061	,078	,112
Staff Expertise	→	Customer Experience	,478	,586	,564	,467
Speed of Service	→	Customer Experience	,454	,264	,313	,372
Customer Experience	→	Customer Satisfaction	,935	,866	,888	,881
Perceived Price	→	Customer Satisfaction	,030	,166	,131	,141
Customer Satisfaction	→	Customer Loyalty	,804	,897	,894	,882

Results pertaining to H2: Staff expertise has a significant impact on customer experience.

H0: There is no significant relationship between Staff expertise and customer experience.

H2: Staff expertise has a significant impact on customer experience.

Table 19 reveals that the coefficient of Staff expertise is 0.559, with a t-value of 7.842 and a p-value less than 0.001. These statistical values confirm that staff expertise positively and significantly impacts customer experience. Therefore, the null hypothesis, which assumed no relationship between staff expertise and customer experience, is rejected in favour of the alternative hypothesis, which suggests that staff expertise has a positive and significant impact on customer experience.

Results pertaining to H3: Speed of service has a significant impact on overall customer experience.

H0: There is no significant relationship between speed of service and customer experience.

H3: Speed of service has a significant impact on overall customer experience.

Table 19 illustrates that a positive and significant relationship exists between speed of service and customer experience, as demonstrated by the beta coefficient of 0.559 and a t-value of 7.842, with a p-value less than 0.001. This indicates that the null hypothesis, which stated that speed of service has no impact on customer experience, is rejected and an alternative hypothesis favoured. Therefore, the conclusion is that speed of service positively and significantly impacts customer experience.

Results pertaining to hypothesis H4: Customer experience has a significant impact on customer satisfaction.

H0: There is no significant relationship between customer experience and customer satisfaction.

H4: Customer experience has a significant impact on customer satisfaction.

Table 19 shows that customer experience ($\beta = 0.885$, t-value = 16.911, p-value < 0.001) positively and significantly impacts customer satisfaction. The coefficient of customer experience ($\beta = 0.885$), which is greater than zero, and a p-value less than 0.05 indicates a positive and significant impact. The alternative hypothesis was favoured, and the null hypothesis was rejected. This means that it can be concluded that customer experience has a positive and significant impact on customer satisfaction.

Results pertaining to hypothesis H5: The perceived price has a significant impact on customer satisfaction.

H0: There is no relationship between perceived price and customer satisfaction.

H5: The perceived price has a significant impact on customer satisfaction.

Table 19 also shows a positive and significant impact of perceived price (β = 0.137, t-value = 4.4284 p-value < 0.001) on customer satisfaction. The coefficient of perceived price (β = 0.137), which is greater than zero and a p-value less than 0.05, indicates a positive and significant impact. The alternative hypothesis was favoured, and the null hypothesis was rejected. This means that it can be concluded that perceived price has a positive and significant impact on customer satisfaction.

Results pertaining to hypothesis H6: Customer satisfaction has a significant impact on customer loyalty.

H0: There is no significant relationship between customer satisfaction and customer loyalty.

H6: Customer satisfaction has a significant impact on customer loyalty.

Results in Table 19 also show a positive and significant impact of customer satisfaction (β = 0.886, t-value = 17.223, p-value < 0.001) on customer loyalty. A greater than zero customer satisfaction coefficient (β = 0.886) indicates a positive impact and is significant with a p-value less than 0.05. The alternative hypothesis was favoured, and the null hypothesis was rejected. This means that it can be concluded that customer satisfaction has a positive and significant impact on customer loyalty.

Results pertaining to hypothesis H7: There is a statistical difference in customer experience, satisfaction, and loyalty between novices and experienced customers.

H0: Customer experience, satisfaction, and loyalty do not differ depending on customer type (Novices against experienced customers)

H7: There is a statistical difference in customer experience, satisfaction, and loyalty between novices and experienced customers.

Independent t-test was conducted, and the results are presented in Table 21. The results show that servicescape was rated higher by novice customers (mean=5.54 ±1.28) compared to experienced customers (mean= 4.81±1.42), p-value = 0.002. The same trend was observed for the speed of service novice customers (mean=5.55 ±1.14) compared to experienced customers (mean=4.96±1.47), p-value = 0.004.

Staff expertise novice customers (p-value = 0.523), customer experience novice customers (p-value = 0.877), customer satisfaction novice customers (p-value = 0.623), perceived price (p-value = 0.092), and customer loyalty (p-value = 0.199) did not differ significantly by customer type as the p-values were greater than 0.05.

Table 21: Customer experience, satisfaction and loyalty between novices and experienced customers

		Group Statistics			**t-test for Equality of Means**	
Novice Customers Vs Experienced customers		N	Mean	Std. Deviation	t	P-value (2-tailed)
Servicescape	Novice customers	40	5.54	1.28	3.081	.002
	Experienced customers	307	4.81	1.42		
Staff Expertise	Novice customers	40	5.64	1.19	0.639	.523
	Experienced customers	307	5.52	1.14		
Speed of Service	Novice customers	40	5.55	1.14	2.993	.004
	Experienced customers	307	4.96	1.47		
Customer Experience	Novice customers	40	5.60	1.18	0.155	.877
	Experienced customers	307	5.57	1.15		
Customer Satisfaction	Novice customers	40	5.43	1.39	0.492	.623
	Experienced customers	307	5.32	1.26		
Perceived Price	Novice customers	40	4.96	1.70	-1.690	.092
	Experienced customers	307	5.37	1.40		
Customer Loyalty	Novice customers	40	5.32	1.53	-1.286	.199
	Experienced customers	307	5.61	1.31		

Results pertaining to hypothesis H8: There is a statistical difference in perception of experience, satisfaction, and loyalty across genders.

H0: Customer experience, satisfaction, and loyalty do not differ depending on gender.

H8: There is a statistical difference in perception of experience, satisfaction, and loyalty across genders.

Table 22: Perception of experience, satisfaction, and loyalty perception across genders

		Group Statistics			t-test for Equality of Means	
Construct	Gender	N	Mean	Std. Deviation	t	Sig. (2-tailed)
Customer Experience	Male	97	5.65	0.98	0.664	.507
	Female	249	5.56	1.20		
Customer Satisfaction	Male	97	5.53	1.07	1.899	.059
	Female	249	5.27	1.32		
Customer Loyalty	Male	97	5.71	1.12	1.060	.290
	Female	249	5.54	1.38		

The results show that the rating of customer experience did not differ significantly by gender, with males rating on average 5.65 ± 0.98 compared with 5.56 ± 1.20. These average scores did not differ significantly since the p-value (0.507) was greater than 0.05. The same pattern was observed for customer satisfaction (p-value = 0.059), and customer loyalty (p-value = 0.290). Thus, in conclusion, the perception of experience, satisfaction and loyalty does not differ across genders.

4.7 Summary of the results

The results from the data analysis are presented in this chapter. The techniques utilized in the analysis are briefly discussed, and the results are presented in summaries, tables, and figures. Hypotheses results are presented in tables, figures, and in summaries. The insignificant influence of servicescape on customer experience informed the decision to reject H1 in favour of the null hypothesis. In addition, the results also suggest that the perception of experience, satisfaction and loyalty does not differ across genders and customer types. A thorough discussion of the key results will be presented in the following section, titled discussion.

CHAPTER 5: DISCUSSION

5.1 Introduction

Chapter 5 discusses the key results from the survey results presented in Chapter 4. This research intended to investigate the effects of customer experience on satisfaction and loyalty in South African hair salons and spas. Additionally, this research aimed to gain a deeper understanding of the interconnections and relationships between customer experience, satisfaction, and loyalty within the beauty industry. The discussion of the results in this chapter will be compared to the results from previous studies as mentioned in the literature review in chapter 2.

5.2 Discussion on hypothesis results

H1: Servicescape has a significant impact on customer experience (Not supported)

The results of the study found that the impact of servicescape on customer experience in hair salons and spas is insignificant. This suggests that customers do not view the service environment as an important factor in their experience and do not consider it to be a value-added element of the service provided. Some studies have also reported that servicescape can affect customer experience in different contexts (Kumar et al., 2017). The conflicting results may be attributed to the underdeveloped role of servicescape in service design, as noted by Fernandes and Neves (2014).

Considering the current study's results, it is evident that there were no significant variations in the coefficients for servicescape across diverse customer segments, suggesting that the impact of servicescape on customer experience in spas and salons does not vary greatly. This suggests that customers do not regard servicescape as having a more significant impact on either spa or salon, and their perception of its importance is uniform.

With regards to physical elements of servicescape in salons, the presence of features such as wash basins, mirrors, comfortable chairs with wheels, and other amenities that facilitate service delivery is crucial in enhancing the customer experience. For instance, a customer who cannot see what is being done to their hair may have a negative experience, whereas a customer who can sit upright and have their hair washed in a comfortable position will likely have a more positive experience.

Similarly, spa owners often go above and beyond by providing high-quality linen, luxurious towels, and gowns, and creating an aesthetically pleasing environment to help customers relax. However, some customers may not fully appreciate these efforts, perceiving them as standard practices rather than unique offerings.

In summary, the current study's results suggest that while certain physical elements of servicescape can significantly impact customer experience, there is no significant difference in the overall servicescape coefficient for different customer segments. Nevertheless, salon and spa owners can still make efforts to provide customers with unique and positive experiences by offering additional services and amenities beyond the standard.

In this study, there were no substantial variations in the coefficients pertaining to novices and experienced customers regarding servicescape. Both groups evaluated the servicescape similarly and found it to be of little consequence to their experience. These results suggest that the current state of the service environment remains unchanged, regardless of whether a customer is visiting the establishment for the first time or has been there multiple times. Additionally, the value of servicescape elements does not fluctuate based on the frequency of the customer's visits. As a result, the customer's assessment of the servicescape is not contingent upon their level of familiarity with the service provider.

H2: Staff expertise has a significant impact on customer experience (Supported)

It has been determined that staff expertise plays a significant and positive role in shaping customer experience. Staff expertise is an integral component of the factors

that contribute to service delivery, and as such, it impacts the quality of interaction between staff and customers in service-oriented environments such as salons and spas. Customer feedback indicates that they perceive staff expertise to be a critical determinant of their overall experience during service delivery.

The results of this study are consistent with previous research by Brady and Cronin Jr (2001) and Haverila and Haverila (2018), which has demonstrated that staff expertise is a significant predictor of customer experience and service quality. In terms of the specific impact of staff expertise on customer experience, both hard and soft skills are important. Hard skills refer to the technical competencies required to perform the job effectively, while soft skills encompass interpersonal skills such as communication, empathy, problem-solving, and compassion. The possession of hard skills ensures that services are delivered to an acceptable standard, while the deployment of soft skills can enhance the customer experience by fostering positive interactions with clients at hair salons and spas.

H3: Speed of service has a significant impact on overall customer experience (Supported)

The study has demonstrated that the speed of service significantly impacts the customer experience at hair salons and spas. To provide a positive experience, there must be no delays before, during, and after the service. These results apply to both hair salons and spas. Time management is of great importance to both businesses and customers and therefore, service providers must adhere to their scheduled appointment times. Any deviations from the scheduled time may negatively impact the customer experience. Furthermore, all activities at the hair salon and spa should be performed within the recommended time frames, as this demonstrates the service provider's understanding of their field and respect for customers' time, ultimately resulting in a positive experience.

This conclusion mirrored previous studies, such as Maddern et al. (2007), which reported a positive correlation between speed of service and customer satisfaction. Other authors have also noted the positive impact of speed of service on customer experience (Botha et al., 2012) and highlighted the negative impact of extended time

of service on customer experience (Durrande-Moreau & Usunier, 1999). In general, it can be concluded that quick service is preferred by customers and that efficient time management is crucial in providing a positive experience.

H4: Customer experience has a significant impact on customer satisfaction (Supported)

The study results indicate that the customer experience has a significant and positive impact on customer satisfaction. It is highly unlikely that a customer would rate a service as satisfactory if they had a negative experience during service delivery. Therefore, salons and spas should strive to provide unique and positive experiences through satisfactory service delivery to minimize churn rates. Managing the customer experience at every touchpoint in a salon or spa increases the likelihood of customers being satisfied with the service provider. Key elements that impact the customer experience, such as servicescape, speed of service, and staff expertise, must be carefully managed to improve the overall experience at the hair salon and spa to increase the chances of satisfaction.

The positive relationship between customer experience and satisfaction is widely acknowledged, with Cetin (2020) having reported that customer experience predicts satisfaction better than quality. Satisfaction is significantly higher when the overall experience is positive. Moments of experience in the salon and spa contribute to the overall satisfaction level with the service provider. Pei et al. (2020) also confirmed the positive relationship between customer experience and satisfaction in their study. The consensus is that a strong and positive relationship exists between customer experience and satisfaction in a service environment.

H5: The perceived price has a significant impact on customer satisfaction (Supported)

The results of the survey indicate that the perceived price of a service positively and significantly impacts customer satisfaction. This positive correlation between perceived price and satisfaction has also been reported in various service industries

such as hotels, low-cost airlines, logistics, telecommunications, and fast-food restaurants (Ashraf & Niazi, 2018; Mandira et al., 2018; Setiawan, 2021; Susanti, 2019; Zhong & Moon, 2020). The perception of price determines customer satisfaction, particularly in service-oriented environments. Customers associate higher perceived prices with higher levels of quality, and they often link quality with price. Therefore, a higher perceived price is closely linked to greater satisfaction.

Iglesias and Guillen (2002) found that when the perceived price matches the actual price, customer satisfaction is higher. In other words, if customers believe they are paying a higher price for a service, they expect to receive a satisfactory experience. However, if customers feel that they are paying too much for a poor-quality service, they may not be satisfied. Therefore, salons and spas need to charge a fair price that matches the quality of the service and is compatible with the prices charged by their peers to increase satisfaction. Customers expect the establishment to charge a fair price that matches the treatment and is compatible with peers to increase customer satisfaction.

H6: Customer satisfaction has a significant impact on customer loyalty (Supported)

The results of the study indicate a positive and significant impact of customer satisfaction on loyalty, which is supported by previous research in different contexts (Hasfar et al., 2020). The author reported customer satisfaction as a strong predictor of loyalty, and the results of this study confirm that satisfied customers are more likely to be loyal to the brand through repeat purchases.

In general, customer satisfaction builds loyalty. When satisfaction is achieved, customers are more likely to return to the same service provider in the future. Satisfied customers are also more likely to develop a relationship with the service provider and insist on returning for future services. Salons and spas that exceed customer expectations and provide satisfactory services are more likely to experience loyalty from customers.

Understanding customer needs and going above and beyond to satisfy them at every encounter can also increase the likelihood of customer satisfaction and build loyalty. Ultimately, the main idea is to ensure that customers are satisfied with each encounter to build a long-term relationship with them.

H7: There is a statistical difference in customer experience, satisfaction, and loyalty between novices and experienced customers (Not supported)

The results indicate no significant difference in perception of customer experience, satisfaction, and loyalty between novice and experienced customers. The results suggest that the level of experience does not impact the customers' perception of experience, satisfaction, and loyalty. The conclusion drawn from this research is that the level of experience with the service does not influence the customers' perception of the service.

Contradictory results have been reported regarding the difference in customer experience, satisfaction, and loyalty between novice and experienced customers. Studies have found statistically significant differences in customer experience (Roy, 2018), satisfaction (Haverila & Haverila, 2018) and loyalty (Ali et al., 2014; Dagger & O'Brien, 2010; Walsh et al., 2008) between novices and experienced customers. The conflicting results may be due to the studies being conducted in different contexts.

Experienced customers may have a reference and knowledge of how the service should be delivered, which could influence their perception of the service. Novice customers, on the other hand, may be satisfied with any level of quality because they have no reference or expectations of the level of quality of the service. This is why Walsh et al. (2008) believe that novices may remain loyal to a service provider due to the fear of experiencing worse service from competitors.

H8: There is a statistical difference in perception of experience, satisfaction, and loyalty across genders (Not supported)

The study reported that there exists no discrepancy in the perception of experience, satisfaction, and loyalty among customers of different genders. This implies that there was no significant variation in how males and females perceive the aforementioned factors at hair salons and spas. The results mirrored studies by Manyanga et al. (2022) and Pei et al. (2020), who reported that gender does not impact the relationship between customer experience, satisfaction, and loyalty. Contrary to the belief held by Haverila and Haverila (2018), the study found that demographics do not influence customer-centric measures such as customer experience, satisfaction, and loyalty.

The definition of customer experience, satisfaction, and loyalty is consistent, and the meaning applies universally across genders. Karatepe (2011) noted that genders process and evaluate information differently. However, this was not observed in the study or other research results. The conclusion is that customers' perception of experience, satisfaction, and loyalty is the same regardless of their gender, and satisfaction will be the outcome of positive experiences. Their loyalty will depend on the level of satisfaction.

5.3 Conclusion of discussion

Chapter 5 focused on the results presented in Chapter 4, offering an in-depth interpretation post results analysis. Much of this chapter is dedicated to comparing the results of the study with those of previous research, with a particular emphasis on studies conducted in South Africa. The discussion highlights both similarities and differences between the results, with consideration given to the unique context of hair salons and spas in South Africa.

CHAPTER 6: CONCLUSION & RECOMMENDATIONS

6.1 Introduction

This chapter brings to a close the current investigation by summarizing the primary results and offering guidance to hair salon and spa proprietors on ways to improve the customer experience and foster loyalty. The results of the hypotheses testing are incorporated into the study's broader goals, which seek to address the research question introduced in the first chapter. Recommendations are presented in order of the impact as determined by the study's results. The chapter concludes with a discourse on the limitations of the present research and suggestions for future studies.

6.2 Summary of results

Based on a rigorous examination of the antecedents of customer experience in South African hair salons and spas, this study has determined that staff expertise is the most significant factor influencing customer experience, followed by speed of service. However, the servicescape had an insignificant impact on customer experience as shown in table 19. Moreover, there was no variance in the perception of experience, satisfaction, and loyalty between customers based on gender or years of experience in the beauty industry, as indicated in table 20 and table 21. The findings suggest that a positive and significant relationship exists between customer experience and satisfaction, and that satisfaction also has a positive and significant impact on loyalty. These findings address the research question posited in chapter 1, which queried the impact of customer experience on satisfaction and loyalty in the South African beauty industry: customer experience has a demonstrable and significant impact on both satisfaction and loyalty in the service industry.

The significance of customer experience, satisfaction, and loyalty as strategic marketing tactics in service-dominated businesses cannot be overstated. The management of factors that impact customer experience, such as servicescape, staff expertise, and speed of service in spas and hair salons, directly influences customer satisfaction and loyalty, ultimately affecting business profitability, market share, and sustainability. Although the concept of customer experience and its impact on

satisfaction and loyalty has been extensively studied in various contexts, there is a paucity of research on the customer's perspective of the factors that impact their experience in spas and hair salons in South Africa. This research aimed to fill this gap by investigating the customer's perspective on the factors that influence their experience.

The results revealed that there is a discrepancy between the perceptions of business owners and customers regarding the factors that impact customer experience. Simply managing elements that impact customer experience without considering the customer's perspective will not lead to a positive experience for customers. Therefore, it is crucial to investigate the customer's perception of what impacts their experience, what they value, and what they find invaluable. By doing so, businesses can create a unique and positive experience for customers by managing elements such as servicescape, speed of service, and staff expertise.

In conclusion, customers are unique and have constantly changing needs, particularly when it comes to service quality. Their preferences switch due to various factors such as emotions, cost, trends, and availability of substitutes. Therefore, the management of customer experience elements should be guided by customers and not determined by the business itself.

6.2.1 The impact of staff expertise, speed of service and servicescape on customer experience

Staff expertise is a crucial asset to any business, and its possession often serves as a source of competitive advantage. The knowledge and experience of staff in their respective fields, as well as their compassion for customers, are essential in creating a positive experience and delivering satisfactory services to customers. When staff members possess the necessary skills and expertise, the risk of service failure is minimized, saving the company time and money that would otherwise be spent on rework. Furthermore, customers tend to trust the expertise of staff members when choosing a service provider, as they seek error-free services.

Time is a valuable commodity, and the speed at which services are delivered is crucial. The length of time it takes for a service provider to complete a service, from the moment the customer enters the store to the moment they leave, is known as the speed of service. Several factors can impact the speed of service, including waiting for service, staff availability, staff competency, and equipment efficiency. The speed of service has been shown to have an impact on customer experience and satisfaction. Extended wait times have been reported to negatively impact customer experience. Additionally, the speed of service may reflect how the service provider manages time, and customers generally prefer not to spend an excessive amount of time in salons and spas. Delays in service delivery can negatively impact experience and overall satisfaction.

Chapter 2 emphasized that the servicescape is a crucial element in shaping the customer experience. The design of the service environment can shape the first impression of a business and influence customer perceptions. The ambience of a service space, particularly in areas where customers spend a considerable amount of time, is deemed critical. The physical elements of the servicescape, such as furniture and equipment, not only enhance service delivery but also prevent service failures.

Despite the consensus that servicescape positively and significantly impacts customer experience, the current study reported an insignificant effect. Variations in research contexts, such as timeframe, location, context, and sample frame, may account for the discrepancy. The mindset and emotional state of respondents in a particular setting can also influence their perception of the servicescape and impact the overall experience. For example, anxiety at an airport may negatively affect the evaluation of the servicescape. The importance of the servicescape may also differ across various settings, such as restaurants, where cleanliness and hygiene are critical factors. In a hospital setting, a clean physical environment is similarly vital for patient well-being. Therefore, it is not surprising that varying results on the impact of servicescape on customer experience were reported.

6.2.2 The impact of customer experience on satisfaction

Customer satisfaction is a consequence of a customer's perception of service quality, which is usually evaluated through their positive emotions. In its simplest form, customer satisfaction is the outcome of a positive interaction with the service provider. The distinction between customer experience and satisfaction is subtle, with customer experience being the perception of encounters with the service provider, and satisfaction being a consequence of positive customer experience. Satisfaction can only be measured post-purchase, and it cannot be achieved without a positive experience. Thus, improving customer experience is crucial for enhancing satisfaction.

The measurement of customer experience varies depending on the context, with customers in the tourism industry seeking experiences for satisfaction, and those in a hair salon prioritizing the quality of service. The assessment criteria for customer satisfaction is not consistent in different industries and contexts. Customer satisfaction is vital for any business success, as unsatisfied customers are likely to switch to competitors, resulting in financial loss for the company.

6.2.3 The impact of perceived price on customer satisfaction

Price is a monetary value that is sacrificed in exchange for a service. Perceived price is a customer's mental association with the value of a service. Service providers utilize pricing strategies to position themselves against competitors, while customers use perceived price to evaluate the perceived quality of a service. The role of price in purchasing decisions is particularly significant in a service environment, as customers are more likely to purchase if they feel that the price is fair.

A positive relationship exists between perceived price and service quality, with customers generally seeking value for money. When the perceived price aligns with the perceived quality of the service, it leads to satisfaction. This relationship has been reported to be positive in many service industries, and the current study also found a significant and positive impact of perceived price on satisfaction at hair salons and spas. This is because service providers charge a fair price for the services they provide, which not only leads to satisfaction from a perfect manicure or beautiful

hairstyles but also to a unique experience that customers are willing to pay a premium price for, resulting in overall satisfaction.

6.2.4 The impact of customer satisfaction on loyalty

Customer loyalty is a conscious decision to maintain a relationship with a service provider and demonstrate steadfast support for the brand. Loyalty is demonstrated by repeatedly purchasing from the provider, despite competitive pressures. Loyal customers can bring benefits to a business, including increased market share, financial gains, and positive word-of-mouth.

Customer loyalty is often assessed through customer lifetime value, which evaluates customer frequency in the store and calculates their lifetime spending. Customer satisfaction is often found to be a predictor of loyalty in various industries, including the beauty industry. Enhancing customer experience was found to improve loyalty. It may be concluded that positive experiences lead to satisfaction, which ultimately impacts loyalty. The strength of the relationship between satisfaction and loyalty is reinforced by mediators, such as loyalty programs, in some industries.

6.3 Recommendation on factors that influence customer experience

The management of customer behaviour has made it feasible for business proprietors to influence the overall customer experience. A variety of elements that impact the customer experience can be controlled to shape perceptions. This study focused on investigating three key elements that influence the customer experience, and subsequent recommendations on how to manage these elements is presented in a hierarchical format. The element that has the most significant impact should be prioritized, followed by the second most impactful element, and so forth. The results found staff expertise to be the most significant element in shaping the customer experience, followed by speed of service, and servicescape, which had an insignificant impact. As such, it is recommended that spa and salon owners prioritize the management of these elements in the order presented. Additionally, recommendations on how to influence satisfaction and loyalty will be provided in the

same hierarchical sequence, with customer experience being the most significant influencer of satisfaction, followed by perceived price.

6.3.1 Staff expertise and customer experience

The results of the study indicate that staff expertise has the greatest impact on customer experience when compared to the speed of service and servicescape. This finding emphasizes the importance of appointing the appropriate personnel with the necessary skills and placing them in the appropriate positions to ensure the success of any business. Given the specialized nature of spas and salons, massage therapists and beauticians must possess a minimum of a 2-year diploma in beauty therapy and therapeutic massage. Additionally, spa staff must be registered with the Allied Health Professions Council of South Africa (AHPCSA), a regulatory body for complementary health professions.

The recruitment, training, and development of experienced staff are critical investments that contribute to an exceptional customer experience and increase profits for the business. Failure to prioritize staff expertise can result in service failures and repeat jobs, leading to significant financial losses and negatively impacting customer loyalty. Therefore, it is recommended that staff expertise be given the highest priority in terms of investment.

Investing in the expertise of staff can also cover other elements that impact customer experience, such as the presentation of staff and efficiency of service. The impact of staff on these elements underscores the importance of considering the human element holistically. As people span across all three elements of customer experience, satisfaction and loyalty, spa and salon owners should prioritize investing in their human capital in all aspects.

6.3.2 Speed of service and customer experience

With regards to customer experience, the speed of service is considered the second most critical factor, following staff expertise. In essence, speed of service is vital to both customers and businesses. Customers desire to spend the least amount of time

in the salon or spa, thereby allowing them to allocate their time to other activities. By completing services faster, beauticians can accommodate more customers daily. This translates to increased revenue for the business.

However, it is crucial to note that while speed of service is vital, it should not be prioritized at the expense of quality. Salon and spa owners should work on standard operating procedures and process mapping to minimize time waste by standardizing processes. This involves eliminating non-value-added actions and variations in the process, resulting in consistent quality of service and customer satisfaction. For example, Rivera Camacho (2012) suggested the use of Lean Six Sigma methodology to minimize waiting time in salons.

A formal tone is crucial in ensuring that the store layout is properly arranged to manage time efficiently. Spa and salon managers should arrange equipment in a manner that enables a seamless flow of work, minimizing travel time around the store during service provision. Regular equipment servicing is also recommended to ensure that they operate efficiently, minimizing downtime. Each workstation should have its own equipment, such as a hair drier and combs, to avoid delays. It is beneficial to have sufficient equipment in good working condition at every workstation to complete services within the specified time frame.

To minimize long waiting times before a service, an appointment system can be introduced. This system helps manage time for both service providers and customers, ensuring that customers only spend minimum time in the store. The introduction of this system will immediately improve the customer experience if used properly.

6.3.3 Servicescape and customer experience

Servicescape encompasses both tangible and intangible elements that customers encounter and interact with before receiving a service and during a service at a salon or spa. These elements serve to create a beautiful and conducive environment for customers. Although certain servicescape elements such as furniture and equipment are essential for delivering services to an acceptable standard, customers at the spa

and hair salon do not deem them to be particularly impactful to their experience, and they have been rated lowest in comparison to speed of service and staff expertise.

It is recommended that business owners prioritize the investment of minimum resources in servicescape elements that facilitate service delivery, such as equipment, rather than focusing on aesthetics. Currently, there are minimum requirements for ambience in a spa, including soft music, appropriate temperature, scent, and staff uniform. These elements do not require significant financial investment as they are already a standard in the spa. Staff members are also expected to wear uniform. There is no need for any additional frills or enhancements to the servicescape that do not directly impact the customer experience.

6.4 Recommendation on factors that influence customer satisfaction

6.4.1 Customer experience and satisfaction

Customer experience is a more reliable predictor of satisfaction than quality (Cetin, 2020). The author reported that in tourism, customers value positive experiences more than quality service. Panday and Nursal (2021) corroborate this claim and posit that satisfaction cannot be achieved in the absence of positive experiences. Therefore, salon and spa owners must invest more resources in improving customer experience to positively influence satisfaction. Customer experience is a perception of moments of truth, and salon and spa owners should analyse the elements that impact customer experience and manage those elements to create positive experiences for customers. This study found that staff expertise is the biggest influencer of experience, followed by speed of service. Servicescape was found to be the least influential element that impacts experience in spas and hair salons.

To positively influence satisfaction, hair salons and spa owners should prioritize the management of these elements. In a spa setting, customers perceive experience during the relaxation moments. Therefore, service providers should prioritize improving staff expertise, followed by speed of service, and lastly improve the servicescape. It was also mentioned that salon customers value quality more than

experience while spa customers value experiences more during their relaxation moments. Therefore, recommendations on the management of the three elements being staff expertise, speed of service and servicescape should take into consideration the service in question.

Staff expertise: To ensure satisfaction, salon owners should employ skilled beauticians with a wealth of experience. Likewise, spa owners should hire staff with exceptional soft skills, coupled with compassion, to provide a customer experience that surpasses expectations and positively impacts satisfaction levels. The expertise of staff members is crucial in ensuring positive experiences, which ultimately influences overall satisfaction.

Speed of service: The speed of service is relative, and while salons may work more quickly, the quality of service must remain at a high standard. The customer's payment is based on the quality of service received and not necessarily the amount of time spent in the salon. Salon owners could increase their revenue by treating more people in a day without compromising quality because a compromise of quality and experience may result in negative feedback from customers and a loss of revenue for their businesses.

It is argued that spa treatments should not be rushed, and therapists should spend the allocated time, 45 minutes in this case, on the treatment. Cutting the time of treatments would result in inadequate service and negative experiences, impacting satisfaction. The time issue should be handled differently depending on the service provider, and proper management, including adhering to the scheduled time, can positively influence the experience and improve satisfaction. The speed of service can also have a negative impact, but proper management can mitigate this and lead to a positive experience which ensures satisfaction.

Servicescape: Based on the results of this study, servicescape appears to have the least impact on customer experience. Therefore, it should be considered the least priority when attempting to improve the overall customer experience and satisfaction. As previously discussed in section 6.2.3, servicescape refers to the surrounding

aspects of a salon or spa, including lighting, ambience, and equipment. While it is expected that a spa has a calm and relaxing atmosphere, and that a salon has good lighting for staff to perform services, it is not necessary to go above and beyond in terms of decor or extras. Service providers should focus on providing the necessary equipment and facilities to perform and facilitate services and avoid frills that may not influence the customer experience as they may have a minimum impact on satisfaction.

6.4.2 Perceived price and satisfaction

In the hierarchy of factors that have the greatest impact on customer satisfaction, the perception of price ranks second to the experience. Customers place a higher value on the experience than on price when evaluating satisfaction. Therefore, the quality of the experience in a spa or hair salon is more important to customers than the price charged by the service provider. However, it is important for service providers to carefully consider their pricing strategies. They can use pricing to position themselves as a premium service provider whereby they specifically target exclusive clients by charging a premium price to increase revenue. A cheaper pricing strategy can also be used to attract more customers which will increase profit for the business. Ultimately, the pricing mechanism chosen by the service provider will depend on their specific goals, whether they aim to be exclusive or profitable.

It is imperative to consider the cost of products used when determining the pricing for hair and nail services. The use of premium brands in hair salons and spas can increase the cost of the service. Similarly, the use of long-lasting nail polish will increase the cost of a manicure, and the use of 100% human hair fibre in hairstyles will increase the cost of the service. High-quality products cost more but higher quality and satisfaction are guaranteed.

Moreover, the technique and complexity of the service should also be considered when determining pricing. Complicated services, such as hair styling or nail art, require a higher level of skill and precision and therefore should be priced higher than simpler services like a hair wash or gel soak-off. However, service providers need to match

the pricing with the quality of the service to satisfy customers. Ultimately, the goal is to provide customers with high-quality service and positive experiences at a fair price.

6.5 Recommendation on factors that influence customer loyalty

6.5.1 Customer satisfaction and loyalty

Positive experiences lead to customer satisfaction, which is a result of every touch point with the brand, including interactions with staff and the reception area during service and post-service experiences. The overall satisfaction is a positive outcome of the combination of various elements that impact their experience. Effective management of positive experiences results in overall satisfaction. The recommendations will focus on staff, products, and treatments at hair salons and spas.

The recommendation regarding staff recruitment and training has already been discussed in detail before, where the minimum requirements are outlined. The recruitment of knowledgeable staff ensures that the service is of a high standard. Staff with experience are aware of the quality level that customers expect and are equipped to provide customers with respect and dignity. A compassionate staff increases the likelihood of a positive customer experience, leading to satisfaction.

Customers should feel welcome from the moment they enter the salon and spa until they leave. Staff plays a crucial role in making customers feel welcome and satisfied with the service. The reception area should be manned by welcoming staff who are knowledgeable about all that is on offer, including prices for each service. Service staff should be compassionate, experienced, and knowledgeable to advise customers on the best treatments to choose from. They should also be efficient and effective.

Spa owners should prioritize the delivery of exceptional massage therapy and other treatments, such as manicures and facial treatments, using high-quality products and equipment. Essential oils used in massage therapy and manicure treatments should be tested and approved by relevant bodies in the essential oils association to ensure that they do not cause adverse reactions. The recommended essential oils for

relaxation are Lavender, Geranium, Frankincense, Coriander, and Bergamot. Similarly, it is recommended to use long-lasting nail polish from reputable brands such as OPI, Gelish, Essie, and Deborah Lippman.

All treatments offered by the spa should meet industry standards and the service providers should communicate the treatment plan, including the duration of the treatment and products to be used. The therapist should also explain the treatments in detail to the customer. Additionally, stones and wooden instruments used in the treatments should be cleaned and disinfected regularly. It is important to inquire with the customer about any reactions they may have to oils and herbs before the treatment begins.

A final recommendation for enhancing customer satisfaction and promoting loyalty is the implementation of a loyalty program. This sales promotion strategy aims to attract and retain loyal customers by offering them incentives such as discounts and rewards. Spa and salon owners can consider offering clients a percentage discount on their birth month, or a substantial discount on the 5th treatment or the 10th treatment for free, as these rewards motivate customers to return to the same service provider. However, the quality of service must be of a high standard and experiences surpass customer expectations, as customers switch to another service provider if they are unsatisfied with the overall service, even if there are attractive rewards offered.

6.6 Suggestions for future research

This research has certain limitations that restrict its scope to fully explore the customer experience concept. Specifically, the study was confined to a specific geographic area, age group, period, industry, and type of service provided. These constraints offer opportunities for future research to expand the scope of the study in various ways, such as investigating different populations or examining additional elements that impact customer experience. Furthermore, a series of recommendations for future research is outlined below in detail.

6.6.1 Expanding on the limitations and replicating the study in a different context

In previous chapters, the limitations of the research were briefly touched upon. The scope of the study was defined to restrict the research to the 18-45 age group who reside in Gauteng province. However, there are eight additional provinces and a different age group that require further exploration. The current study can either be replicated to encompass the entirety of South Africa or repeated in each province.

A further limitation of the current study was the narrow focus on only two service providers within the broad and diverse beauty industry. The services offered at the salon and spa were the sole purview of this investigation. Despite the vast potential for exploration within South Africa, there are still many opportunities to expand upon the current research. For instance, there is significant potential for investigation in the areas of oral care, reconstructive cosmetic procedures, skincare, and acupuncture. These are but a few examples of the beauty industry's many untapped territories, which the current research can be replicated without difficulty.

It is important to note that the study delimited remote services and services provided at the customer's site, as there was a need to investigate the impact of servicescape on customer experience. While further research could be conducted on similar services offered by the salon and spa at the customer's site, the current research was limited to only this scope. The COVID-19 pandemic has introduced the concept of call-out services, particularly for nails, hair, and massage, where customers can book a beautician from a service provider to come to their home to provide any desired beauty service. This current study can also be replicated to examine customer experience, satisfaction, and loyalty when services are provided at the customer's site, eliminating servicescape, as the service provider would not have control over the environment and ambience at the customer's home.

Concerning the scope of the investigation, the research was focused on a six-month time frame before the survey. Those who had received a service outside of this period were excluded from the study. This was done to ensure that the customers'

experiences were still fresh in their minds, as well as to enable the study to accurately assess loyalty based on the frequency of visits. The opportunity exists to explore a longer period, particularly for spa customers, as many individuals do not visit spas frequently. The results of the current study revealed that only 20% of the respondents had visited a spa four times or more within the six months, compared to 56% who had visited a salon during the same time frame. Therefore, it is recommended that the scope of the spa study be expanded to include a longer period to ascertain if frequency is a factor.

6.6.2 Exploring servicescape impact on customer experience

The current study reported that the servicescape has an insignificant impact on customer experience, which was unexpected based on the literature presented in chapter 2. All authors in the literature review reported a significant impact of servicescape on customer experience in service contexts across different industries. Therefore, the recommendation for future research is to investigate further why customers do not consider the service environment in their evaluation of experience and satisfaction, especially at spas and hair salons in South Africa.

It is suggested that if a future study is conducted to explore these unexpected results, the researcher could dissect the servicescape concept and list all the elements that makeup servicescape at salon and spa, respectively, to ascertain which elements impact customer experience and which do not. For example, ambience is an important element in spas and hair salons, and the researcher could examine sub-elements such as lighting, music, and odour to assess the experience from a servicescape perspective. The condition of furniture and equipment could also be listed and assessed because worn-out and used-up equipment could impact service quality and experience.

The results of future research would provide clarity as to what customers value most in the service environment. The results would be used to recommend action items around which elements of servicescape need to be prioritized to improve customer experience.

6.6.3 Improve discriminant validity of other constructs

The model exhibited discriminant validity issues with regard to staff expertise, customer experience, satisfaction, and loyalty. Although pruning of the model was conducted, no improvement in the model was achieved. Recommendations for addressing this issue in future research include reassigning items, removing problematic items, or combining related constructs, such as customer experience and satisfaction. If pruning fails to improve the model, researchers can rather utilise a different scale if available or create a new scale to measure these problematic constructs.

REFERENCE LIST

Aithal, A., & Aithal, P. (2020). Development and validation of survey questionnaire & experimental data–a systematical review-based statistical approach. *International Journal of Management, Technology, and Social Sciences (IJMTS), 5*(2), 233-251.

Akinro, N., & Mbunyuza-Memani, L. (2019). Black is not beautiful: Persistent messages and the globalization of "white" beauty in African women's magazines. *Journal of International and Intercultural Communication, 12*(4), 308-324.

Albers, M. J. (2017). Quantitative data analysis—In the graduate curriculum. *Journal of Technical Writing and Communication, 47*(2), 215-233.

Ali, F., Hussain, K., & Ragavan, N. A. (2014). Memorable customer experience: Examining the effects of customers experience on memories and loyalty in Malaysian resort hotels. *Procedia-Social and Behavioral Sciences, 144*, 273-279.

Apuke, O. D. (2017). Quantitative research methods: A synopsis approach. *Kuwait Chapter of Arabian Journal of Business and Management Review, 33*(5471), 1-8.

Ashraf, M. A., & Niazi, A. (2018). Impact of brand image, service quality and trust on customer loyalty, moderating effect of perceived price fairness and the mediating effect of customer satisfaction: case study on telecommunication sector of Pakistan. *Service Quality and Trust on Customer Loyalty, Moderating Effect of Perceived Price Fairness and the Mediating Effect of Customer Satisfaction: Case Study on Telecommunication Sector of Pakistan (August 20, 2018)*.

Baker, J., Bentley, K., & Lamb, J., Charles. (2020). Service environment research opportunities. *Journal of Services Marketing, 34*(3), 335-346.

Beauty & Personal Care - South Africa*: Market forecast*. Statista. (n.d.). Retrieved March 16, 2023, from https://www.statista.com/outlook/cmo/beauty-personal-care/south-africa

Becker, L., & Jaakkola, E. (2020). Customer experience: fundamental premises and implications for research. *Journal of the Academy of marketing Science, 48*(4), 630-648.

Berndt, A. E. (2020). Sampling methods. *Journal of Human Lactation, 36*(2), 224-226.

Berry, L. L., Carbone, L. P., & Haeckel, S. H. (2002). Managing the total customer experience. *MIT Sloan management review, 43*(3), 85-89.

Black, P., & Sharma, U. (2001). Men are real, women are 'made up': Beauty therapy and the construction of femininity. *The Sociological Review, 49*(1), 100-116.

Blanchin Audrey, C., & Levert, Q. (2007). The customer behaviour in the men's cosmetics market. *University of Halmstad, School of Business and Engineering Bachelor Degree*.

Bolton, R. N., McColl-Kennedy, J. R., Cheung, L., Gallan, A., Orsingher, C., Witell, L., & Zaki, M. (2018). Customer experience challenges: bringing together digital, physical and social realms. *Journal of Service Management, 29*(5), 776-808.

Botha, G. J., Kruger, P. S., & De Vries, M. (2012). Enhancing customer experience through business process improvement: an application of the Enhanced Customer Experience Framework (ECEF). *South African Journal of Industrial Engineering, 23*(1), 39-56.

Brady, M. K., & Cronin Jr, J. J. (2001). Some new thoughts on conceptualizing perceived service quality: a hierarchical approach. *Journal of Marketing, 65*(3), 34-49.

Brodie, R. J., Saren, M., & Pels, J. (2011). Theorizing about the service dominant logic: The bridging role of middle range theory. *Marketing Theory, 11*(1), 75-91.

Burgess, S. M., & Steenkamp, J.-B. E. (2006). Marketing renaissance: How research in emerging markets advances marketing science and practice. *International Journal of Research in Marketing, 23*(4), 337-356.

Cakici, A. C., Akgunduz, Y., & Yildirim, O. (2019). The impact of perceived price justice and satisfaction on loyalty: the mediating effect of revisit intention. *Tourism Review, 74*(3), 443-462.

Cetin, G. (2020). Experience vs quality: predicting satisfaction and loyalty in services. *The Service Industries Journal, 40*(15-16), 1167-1182.

Chang, T.-Y., & Horng, S.-C. (2010). Conceptualizing and measuring experience quality: the customer's perspective. *The Service Industries Journal, 30*(14), 2401-2419.

Chingang Nde, D., & Lukong, P. (2010). Using the SERVQUAL Model to assess Service Quality and Customer Satisfaction.: An Empirical Study of Grocery Stores in Umeå. In.

Chinomona, R., & Dubihlela, D. (2014). Does customer satisfaction lead to customer trust, loyalty and repurchase intention of local store brands? The case of Gauteng Province of South Africa. *Mediterranean Journal of Social Sciences, 5*(9), 23.

Church, I., & Newman, A. J. (2000). Using simulations in the optimisation of fast food service delivery. *British Food Journal*.

Dagger, T. S., & O'Brien, T. K. (2010). Does experience matter? Differences in relationship benefits, satisfaction, trust, commitment and loyalty for novice and experienced service users. *European Journal of Marketing*.

Darmawan, D., & Grenier, E. (2021). Competitive Advantage and Service Marketing Mix. *Journal of Social Science Studies (JOS3), 1*(2), 75-80.

Desiyanti, N. L., Sudja, I. N., & Martini, L. K. B. (2018). Effect of service quality on customer satisfaction, customer delight and customer loyalty (Study on LPD Desa Adat Sembung and LPD Desa Adat Seseh). *International Journal of Contemporary Research and Review, 9*(03), 20660-20668.

Dion, D., & Borraz, S. (2017). Managing status: How luxury brands shape class subjectivities in the service encounter. *Journal of Marketing, 81*(5), 67-85.

Durrande-Moreau, A., & Usunier, J.-C. (1999). Time styles and the waiting experience: an exploratory study. *Journal of service research, 2*(2), 173-186.

Edvardsson, B., Gustafsson, A., & Roos, I. (2005). Service portraits in service research: a critical review. *International journal of service industry management*.

Faidah, M., Rusmanto, H., Rahmawati, L., Kusstianti, N., & Wijayanti, F. P. (2021). Exploring muslim tourist needs at Halal Spa facilities to support Indonesia's Sharia Tourism. *International Journal of Religious Tourism and Pilgrimage, 9*(1), 11.

Falkof, N. (2022). Consuming Africa: safari aesthetics in the Johannesburg beauty industry. *Consumption Markets & Culture, 25*(1), 21-33.

Febrian, D., Simanjuntak, M., & Hasanah, N. (2021). The effect of benefits offered and customer experience on re-use intention of mobile banking through customer satisfaction and trust. *Jurnal Keuangan dan Perbankan, 25*(3), 551-569.

Fernandes, T., & Neves, S. (2014). The role of servicescape as a driver of customer value in experience-centric service organizations: the Dragon Football Stadium case. *Journal of Strategic Marketing, 22*(6), 548-560.

Frederick, D., Forbes, M., Jenkins, B., Reynolds, T., & Walters, T. (2015). Beauty standards. *P., Whelehan, A. Bolin,(Eds.), The international encyclopedia of human sexuality*, 113-196.

Fu, W., Wei, S., Wang, J., & Kim, H.-S. (2022). Understanding the customer experience and satisfaction of casino hotels in Busan through online user-generated content. *Sustainability, 14*(10), 5846.

Gaberamos, O., & Pasaribu, L. H. (2022). The Effect Of Information Quality, Customer Experience, Price, And Service Quality On Purchase Intention By Using Customer Perceived Value As Mediation Variables (Study On Gofood Applications On The Millenial Generation). *Jurnal Mantik, 5*(4), 2470-2480.

Gao, L., Melero-Polo, I., & Sese, F. J. (2020). Customer equity drivers, customer experience quality, and customer profitability in banking services: The moderating role of social influence. *Journal of service research, 23*(2), 174-193.

Garg, R., Rahman, Z., & Qureshi, M. (2014). Measuring customer experience in banks: scale development and validation. *Journal of Modelling in Management*.

Gottschalk, F. C. (2018). What characterizes Credence Goods? A critical look at the literature. *A Critical Look at the Literature.(February 12, 2018)*.

Greer, C. R., Lusch, R. F., & Vargo, S. L. (2016). A service perspective. *Organizational dynamics, 1*(45), 28-38.

Gunasti, K., Kara, S., & Ross, J., William T. (2020). Effects of search, experience and credence attributes versus suggestive brand names on product evaluations. *European Journal of Marketing, 54*(12).

Guo, X. (2011). Cosmetics Consumption among young males in the Greater Helsinki Region.

Hasfar, M., Militina, T., & Achmad, G. N. (2020). Effect of customer value and customer experience on customer satisfaction and loyalty PT meratus samarinda. *International Journal of Economics, Business and Accounting Research (IJEBAR), 4*(01).

Haverila, M. J., & Haverila, K. C. (2018). Examination of customer-centric measures among different types of customers in the context of major Canadian ski resort. *Asia Pacific Journal of Marketing and Logistics*.

Hayashi Jr, P., Abib, G., & Hoppen, N. (2019). Validity in qualitative research: A processual approach. *The Qualitative Report, 24*(1), 98-112.

Helkkula, A., Kowalkowski, C., & Tronvoll, B. (2018). Archetypes of service innovation: implications for value cocreation. *Journal of service research, 21*(3), 284-301.

Hodge, S. R. (2020). Quantitative research. In *Routledge Handbook of Adapted Physical Education* (pp. 147-162): Routledge.

Hooper, D., Coughlan, J., & Mullen, M. R. (2013). The servicescape as an antecedent to service quality and behavioral intentions. *Journal of Services Marketing*.

Human, G., Ferreira, C. C., Robertson, J., & Whiterspoon, M. (2020). Customer experience, satisfaction and loyalty in business-to-business markets: Does the chain hold across customer segments? *Acta Commercii, 20*(1), 1-13.

Icenogle, G., Steinberg, L., Duell, N., Chein, J., Chang, L., Chaudhary, N., . . . Lansford, J. E. (2019). Adolescents' cognitive capacity reaches adult levels prior to their psychosocial maturity: Evidence for a "maturity gap" in a multinational, cross-sectional sample. *Law and human behavior, 43*(1), 69.

Iglesias, M. P., & Guillen, M. J. Y. (2002). The components of total perceived price: an empirical analysis in restaurant services. *Journal of Foodservice Business Research, 5*(1), 1-22.

Izogo, E. E., Jayawardhena, C., & Karjaluoto, H. (2023). Negative eWOM and perceived credibility: a potent mix in consumer relationships. *International journal of retail & distribution management, 51*(2), 149-169.

Jammine, C., Eresia-Eke, C. E., & Locke, C. (2019). Towards customer satisfaction and loyalty: What cuts it in a hair salon? *The Southern African Journal of Entrepreneurship and Small Business Management, 11*(1), 1-7.

Karatepe, O. M. (2011). Service quality, customer satisfaction and loyalty: the moderating role of gender. *Journal of Business Economics and Management, 12*(2), 278-300.

Kasongo, A., Sithole, M., & Buchana, Y. (2023). Empirical analysis of innovation and productivity in services firms: The case of South Africa. *African Journal of Science, Technology, Innovation and Development, 15*(1), 1-13.

Kaushik, M., & Mathur, B. (2014). Data analysis of students marks with descriptive statistics. *International Journal on Recent and Innovation Trends in computing and communication, 2*(5), 1188-1190.

Keiningham, T., Ball, J., Benoit, S., Bruce, H. L., Buoye, A., Dzenkovska, J., . . . Zaki, M. (2017). The interplay of customer experience and commitment. *Journal of Services Marketing*.

Kim, T. K. (2017). Understanding one-way ANOVA using conceptual figures. *Korean journal of anesthesiology, 70*(1), 22-26.

Kim, Y.-J., & Kim, H.-S. (2022). The impact of hotel customer experience on customer satisfaction through online reviews. *Sustainability, 14*(2), 848.

Kimberlin, C. L., & Winterstein, A. G. (2008). Validity and reliability of measurement instruments used in research. *American journal of health-system pharmacy, 65*(23), 2276-2284.

Klaus, P. P., & Maklan, S. (2013). Towards a better measure of customer experience. *International journal of market research, 55*(2), 227-246.

Knutson, B. J., & Beck, J. A. (2004). Identifying the dimensions of the experience construct: development of the model. *Journal of Quality Assurance in Hospitality & Tourism, 4*(3-4), 23-35.

Kumar, D. S., Purani, K., & Sahadev, S. (2017). Visual service scape aesthetics and consumer response: a holistic model. *Journal of Services Marketing*.

Kumar S; Mokha, A. K. (2021). Relationship between E-CRM, Customer Experience, Customer Satisfaction and Customer Loyalty in Banking Industry: A Review of Literature. *RESEARCH REVIEW: International Journal of Multidisciplinary, 6*(2), 127-137.

Kumari, A. (2022). A REVIEW OF RESEARCH PROCESS: DATA COLLECTION AND ANALYSIS. *Galaxy International Interdisciplinary Research Journal, 10*(5), 771-780.

Lee, H. S. (2013). Major moderators influencing the relationships of service quality, customer satisfaction and customer loyalty. *Asian Social Science, 9*(2), 1.

Lemon, K. N., & Verhoef, P. C. (2016). Understanding customer experience throughout the customer journey. *Journal of Marketing, 80*(6), 69-96.

Li, C., Lin, A.-P., Lu, H., & Veenstra, K. (2020). Gender and beauty in the financial analyst profession: evidence from the United States and China. *Review of Accounting Studies, 25*, 1230-1262.

Lies, J. (2022). Marketing Intelligence: Boom or Bust of Service Marketing?

Łopaciuk, A., & Łoboda, M. (2013). *Global beauty industry trends in the 21st century.* Paper presented at the Management, knowledge and learning international conference.

Lusch, R. F., & Vargo, S. L. (2014). Service-dominant logic as a foundation for a general theory. In *The service-dominant logic of marketing* (pp. 424-438): Routledge.

Lynch, D., Hofmeyr, K., & Price, G. (2018). Customer service improvement through engagement: A study of the semi-skilled, frontline workforce in the retail industry in South Africa.

Maddern, H., Maull, R., Smart, A., & Baker, P. (2007). Customer satisfaction and service quality in UK financial services. *International Journal of Operations & Production Management*.

Makudza, F. (2020). Augmenting customer loyalty through customer experience management in the banking industry. *Journal of Asian Business and Economic Studies, 28*(3), 191-203.

Mandira, D. A., SULIYANTO, S., & NAWARINI, A. T. (2018). The influence customer trust, service quality, and perceived price on customer satisfaction and customer loyalty. *Journal of Research in Management, 1*(1).

Manyanga, W., Makanyeza, C., & Muranda, Z. (2022). The effect of customer experience, customer satisfaction and word of mouth intention on customer loyalty: The moderating role of consumer demographics. *Cogent Business & Management, 9*(1), 2082015.

Marshall, G., & Jonker, L. (2011). An introduction to inferential statistics: A review and practical guide. *Radiography, 17*(1), e1-e6.

Maucuer, R., Renaud, A., Ronteau, S., & Muzellec, L. (2022). What can we learn from marketers? A bibliometric analysis of the marketing literature on business model research. *Long Range Planning, 55*(5), 102219.

McColl-Kennedy, J. R., Gustafsson, A., Jaakkola, E., Klaus, P., Radnor, Z. J., Perks, H., & Friman, M. (2015). Fresh perspectives on customer experience. *Journal of Services Marketing*.

Mendoza, D. J., Zambrano, C. M., & Rueda, E. (2020). Beauty centers: an overview of their biosafety conditions in Valledupar, colombia. *Revista Brasileira de Medicina do Trabalho, 18*(3), 330.

Mgiba, F., & Madela, K. (2020). South African fuel industry, customer perceptions and satisfaction, and their impact on customer loyalty and repurchase intention. *Journal of Contemporary Management, 17*(1), 16-40.

Mokhlis, S. (2012). The influence of service quality on satisfaction: A gender comparison. *Public administration research, 1*(1), 103.

Mornay, R.-L., & Leon, d. P. (2012). Customer relationship management (CRM) in a South African service environment: An exploratory study. *African Journal of Marketing Management, 4*(4), 152-165.

Motseki, M., & Oyedemi, T. (2017). Social media and the cultural ideology of beauty among young black women in South Africa. *Communitas, 22*, 136-148.

NasarAmini Jeloudarlou, S., Aali, S., Faryabi, M., & Bafandeh Zendeh, A. (2022). The effect of servicescape on customer engagement: The mediating role of customer experience. *Journal of Quality Assurance in Hospitality & Tourism, 23*(2), 318-344.

Nhamo, L., Mpandeli, S., & Hlophe-Ginindza, S. (2021). Urban nexus as a transformative pathway towards a resilient Gauteng City Region.

Nilsson, E., & Ballantyne, D. (2014). Reexamining the place of servicescape in marketing: a service-dominant logic perspective. *Journal of Services Marketing*.

Noble, S. M., Griffith, D. A., & Adjei, M. T. (2006). Drivers of local merchant loyalty: Understanding the influence of gender and shopping motives. *Journal of retailing, 82*(3), 177-188.

Nokuthula, R., & Tavonga, M. (2020). An efficiency analysis of female hair dressers in Empangeni, South Africa: the role of infrastructure. *Studies in Economics and Econometrics, 44*(1), 113-128.

Okyere, F., & Amoakoh, E. O. ACHIEVING HAIR SALON COMPETITIVENESS THROUGH RELATIONSHIP MARKETING MODEL: A CASE OF HAIR SALONS IN THE FREE STATE PROVINCE IN SOUTH AFRICA.

Othman, B. A., Harun, A., De Almeida, N. M., & Sadq, Z. M. (2020). The effects on customer satisfaction and customer loyalty by integrating marketing communication and after sale service into the traditional marketing mix model of Umrah travel services in Malaysia. *Journal of islamic marketing*.

Palmer, A. (2010). Customer experience management: a critical review of an emerging idea. *Journal of Services Marketing*.

Panday, R., & Nursal, M. F. (2021). The the effect of service quality and customer satisfaction on customer loyalty. *Jurnal manajemen strategi dan aplikasi bisnis, 4*(1), 171-180.

Parasuraman, A., Zeithaml, V. A., & Berry, L. (1988). SERVQUAL: A multiple-item scale for measuring consumer perceptions of service quality. *1988, 64*(1), 12-40.

Park, J., & Park, M. (2016). Qualitative versus quantitative research methods: Discovery or justification? *Journal of Marketing Thought, 3*(1), 1-8.

Pei, X.-L., Guo, J.-N., Wu, T.-J., Zhou, W.-X., & Yeh, S.-P. (2020). Does the effect of customer experience on customer satisfaction create a sustainable competitive advantage? A comparative study of different shopping situations. *Sustainability, 12*(18), 7436.

Pekovic, S., & Rolland, S. (2020). Recipes for achieving customer loyalty: A qualitative comparative analysis of the dimensions of customer experience. *Journal of Retailing and Consumer Services, 56*, 102171.

Perks, S., & Austin, G. (2013). Exploring business growth aspirations and strategic planning of hair dressing salons in South Africa. *Review of Integrative Business and Economics Research, 2*(1), 319.

Prematunga, R. K. (2012). Correlational analysis. *Australian Critical Care, 25*(3), 195-199.

Pryor, S., & Yin, B. (2012). Beauty as Capital.

Rambe, P., & Mpiti, N. (2017). The influence of private and public finance, organisational and environmental variables on the performance of beauty salons in the Free State, South Africa: a theoretical perspective.

Rambe, P., Mpiti, N., & Khaola, P. (2022). Technology acquisition and the hair salon performance: The explanatory roles of human resources practices. *SA Journal of Human Resource Management, 20*, 1822.

Ratsibe, T. (2010). Gender and the South African beauty industry, through the eyes of a young, black marketer. *African Yearbook of Rhetoric, 1*(1), 60-66.

Raza, A., & Almashaqbeh, H. A. (2021). Factors Influencing on Customer Satisfaction in Hair Salons and Beauty Parlors “A Case Study of Istanbul Turkey”. *IBT Journal of Business Studies (IBTJBS), 17*(2), 157-169.

Reimer, A., & Kuehn, R. (2005). The impact of servicescape on quality perception. *European Journal of Marketing*.

Risnawati, H., Sumarga, H. E., & Purwanto, S. (2019). The effect of service quality prices and location of companies to customer satisfaction implications on customer loyalty. *International Review of Management and Marketing, 9*(6), 38.

Rivera Camacho, J. L. (2012). Hair Salon Process Improvement: A Lean Six Sigma Application to Service Industry. *Manufacturing Engineering;*.

Roy, S. (2018). Effects of customer experience across service types, customer types and time. *Journal of Services Marketing*.

Sachdeva, I., & Goel, S. (2015). Retail store environment and customer experience: a paradigm. *Journal of Fashion Marketing and Management*.

Sam, G. (2012). Chapter 3-Research Methodology and Research Method. *Retrieved form*.

Saneva, D., & Chortoseva, S. (2020). Service quality, customer satisfaction and customer loyalty: Testing a structural equation model. *Calitatea, 21*(179), 124-128.

Savalei, V., & Bentler, P. M. (2006). Structural equation modeling. *The handbook of marketing research: Uses, misuses, and future advances, 330*, 36.

Seo, S. (2022). When Female (Male) Robot Is Talking To Me: Effect of service robots' gender and anthropomorphism on customer satisfaction. *International Journal of Hospitality Management, 102*, 103166.

Setiawan, E. B. (2021). How To Build Customer Loyalty: Through Customer Experience, Perceived Price, And Customer Satisfaction. *Turkish Journal of Computer and Mathematics Education (TURCOMAT), 12*(4), 1546-1554.

Shamsudin, M. F., Nayan, S. M., Ishak, M. F., Esa, S. A., & Hassan, S. (2020). Role of price perceptions towards customer satisfaction.

Sharma, L. R. (2023). Choosing appropriate probability sampling designs in research. *Health, 2*, 4-21.

Siddiqi, U. I., & Akhtar, N. (2021). Effects of conflicting hotel reviews shared by novice and expert traveler on attitude ambivalence: the moderating role of quality of managers' responses. *Journal of Hospitality Marketing & Management, 30*(2), 178-200.

Situmorang, S. H., Mulyono, H., & Azmi, A. (2018). *Effect Of Servicescape And Customer Experience On Social Location Marketing (Case Study At Caf, In Medan).* Paper presented at the 1st Economics and Business International Conference 2017 (EBIC 2017).

South Africa's people | South African Government. (n.d.). Retrieved January 3, 2023, from https://www.gov.za/about-sa/south-africas-people

Sukamolson, S. (2007). Fundamentals of quantitative research. *Language Institute Chulalongkorn University, 1*(3), 1-20.

Sumaedi, S., Bakti, I. G. M. Y., & Metasari, N. (2011). The effect of students' perceived service quality and perceived price on student satisfaction. *Management Science and Engineering, 5*(1), 88-97.

Sürücü, L., & MASLAKÇI, A. (2020). Validity and reliability in quantitative research. *Business & Management Studies: An International Journal, 8*(3), 2694-2726.

Susanti, C. E. (2019). The effect of service quality and perceived price fairness on consumer loyalty through consumer satisfaction on budget hotel in East Java. *The Effect of Service Quality and Perceived Price Fairness on Consumer Loyalty through Consumer Satisfaction on Budget Hotel in East Java, 12*(6), 1-7.

Taherdoost, H. (2022). What are different research approaches? Comprehensive Review of Qualitative, quantitative, and mixed method research, their applications, types, and limitations. *Journal of Management Science & Engineering Research, 5*(1), 53-63.

Taylor, S. (1994). Waiting for service: the relationship between delays and evaluations of service. *Journal of Marketing, 58*(2), 56-69.

Ullman, J. B., & Bentler, P. M. (2012). Structural equation modeling. *Handbook of Psychology, Second Edition, 2*.

Van der Heijden, G. A., Schepers, J. J., Nijssen, E. J., & Ordanini, A. (2013). Don't just fix it, make it better! Using frontline service employees to improve recovery performance. *Journal of the Academy of marketing Science, 41*(5), 515-530.

Vilnai-Yavetz, I., & Gilboa, S. (2010). The effect of servicescape cleanliness on customer reactions. *Services Marketing Quarterly, 31*(2), 213-234.

Walsh, G., Evanschitzky, H., & Wunderlich, M. (2008). Identification and analysis of moderator variables: Investigating the customer satisfaction-loyalty link. *European Journal of Marketing*.

Wang, Y. A., & Rhemtulla, M. (2021). Power analysis for parameter estimation in structural equation modeling: A discussion and tutorial. *Advances in Methods and Practices in Psychological Science, 4*(1), 2515245920918253.

Wang, Y. L., Tainyi, L., Luarn, P., & Lu, H. P. (2015). Contribution and Trend to Quality Research--a literature review of SERVQUAL model from 1998 to 2013. *Informatica economica, 19*(1).

Wiener, H. J., Flaherty, K., & Wiener, J. (2022). Starting conversations with new customers: a research note on the moderating effect of experience on responses to small talk. *Journal of Personal Selling & Sales Management*, 1-12.

Wiid, J., & Diggines, C. (2009). Marketing research. Juta.

Woratschek, H., Horbel, C., & Popp, B. (2020). Determining customer satisfaction and loyalty from a value co-creation perspective. *The Service Industries Journal, 40*(11-12), 777-799.

Worlitz, J., Vu, D. L., Hettling, L., & Woll, R. (2019). Perceived Waiting Time and Waiting Satisfaction: a Systematic Literature Review.

Yarimoglu, E. K. (2014). A review on dimensions of service quality models. *Journal of marketing management, 2*(2), 79-93.

Zaid, S., & PATWAYATI, P. (2021). Impact of customer experience and customer engagement on satisfaction and loyalty: A case study in Indonesia. *The Journal of Asian Finance, Economics and Business, 8*(4), 983-992.

Zhong, Y., & Moon, H. C. (2020). What drives customer satisfaction, loyalty, and happiness in fast-food restaurants in China? Perceived price, service quality, food quality, physical environment quality, and the moderating role of gender. *Foods, 9*(4), 460.

Zietsman, M. L., Mostert, P., & Svensson, G. (2018). Perceived price and service quality as mediators between price fairness and perceived value in business banking relationships: A micro-enterprise perspective. *International Journal of Bank Marketing, 37*(1), 2-19.

Zygiaris, S., Hameed, Z., Ayidh Alsubaie, M., & Ur Rehman, S. (2022). Service quality and customer satisfaction in the post pandemic world: A study of Saudi auto care industry. *Frontiers in Psychology, 13*, 842141.

APPENDIX A: CONSISTENCY TABLE

RQ #	Research Question or Objective	H#	Hypothesis statement	Interview question	Data analysis method
RQ1	Does customer experience have any impact on customer satisfaction and loyalty in the beauty industry in South Africa?				
OB1	To evaluate antecedents of customer experience, satisfaction, and loyalty in South African hair salons and spas	H0 H1	There is no significant relationship between servicescape and customer experience. Servicescape has a significant impact on customer experience.	SS1, SS2, SS3, SS4, SS5, SS6	Frequencies, Custom table, Means, Standard deviations
OB1	To evaluate antecedents of customer experience, satisfaction, and loyalty in South African hair salons and spas	H0 H2	There is no significant relationship between Staff expertise and customer experience. Staff expertise has a significant impact on customer experience	SE1, SE2, SE3, SE4, SE5, SE6	Frequencies, Custom table, Means, Standard deviations
OB1	To evaluate antecedents of customer experience, satisfaction, and loyalty in South African hair salons and spas	H0 H3	There is no significant relationship between Speed of service and customer experience. Speed of service has a significant impact on overall customer experience	SsP1, SsP2, SsP3, SsP4, SsP5, SsP6	Frequencies, Custom table, Means, Standard deviations
OB3	To investigate the effects of customer experience on customer satisfaction and customer loyalty in the beauty industry	H0 H4	There is no significant relationship between Customer experience and customer satisfaction. Customer experience has a significant impact on customer satisfaction	CS1, CS2, CS3, CS4, CS5, CS6	SEM

RQ #	Research Question or Objective	H#	Hypothesis statement	Interview question	Data analysis method
OB3	To investigate the effects of customer experience on customer satisfaction and customer loyalty in the beauty industry	H0 H5	There is no significant relationship between perceived price and customer satisfaction. The perceived price has a significant impact on customer satisfaction	PP1, PP2, PP3, PP4, PP5, PP6	SEM
OB3	To investigate the effects of customer experience on customer satisfaction and customer loyalty in the beauty industry	H0 H6	There is no significant relationship between Customer satisfaction and customer loyalty. Customer satisfaction has a significant impact on customer loyalty	CL1, CL2, CL3, CL4, CL5, CL6	SEM
OB2	To assess the differences in perception of experience, satisfaction, and loyalty across genders and years of experience in the beauty industry	H0 H7	Customer experience, satisfaction, and loyalty do not differ depending on customer type (Novices against experienced customers) There is a statistical difference in customer experience, satisfaction, and loyalty between novices and experienced customers	How often did you visit this establishment in the past 6 months? 1, 2, 3, 4+	One-way ANOVA, Independent T-test, Correlation analysis
OB2	To assess the differences in perception of experience, satisfaction, and loyalty across genders and years of experience in the beauty industry	H0 H8	Customer experience, satisfaction, and loyalty do not differ across genders. There is a statistical difference in perception of experience, satisfaction, and loyalty across genders	Gender: Male, female, other?	One-way ANOVA, Independent T-test, Correlation analysis

APPENDIX B: RESEARCH INSTRUMENT

Please select the element that best describes you					
Please select your place of residence					
1. Gauteng	1. Mpumalanga	7. North West			
2. KwaZulu Natal	2. Eastern Cape	8. Free State			
3. Limpopo	3. Western Cape	9. Northern Cape			
Gender			1. Male	2. Female	3. Other
Age bracket		18-25	26-35	36-45	46+
Your latest visit to a beauty establishment				Salon	Spa
How often did you visit this establishment in the past 6 months?		1	2	3	4+
How much have you spent on beauty services in the last 6 months?	<R500	R501 - R700	R701 - R1000	R1001- R2000	+R20000

How do you feel about the environment of the establishment (inside and outside)								
Servicescape elements (Chang & Horng, 2010; Chingang Nde & Lukong, 2010; Fernandes & Neves, 2014; Garg et al., 2014)		**1:** Strongly disagree	**2:** Disagree	**3:** Somewhat disagree	**4:** Neutral	**5:** Some what agree	**6:** Agree	**7:** Strongly agree
SS1	The space design of this salon/spa makes me feel comfortable							
SS2	The salon/spa has up to date equipment							
SS3	The ambient conditions such as temperature, ventilation, noise, and odour of the branch are good							
SS4	The signs, symbols, advertisements, boards, pamphlets, and other artefacts are properly placed							
SS5	The decoration of this store is not appealing							
SS6	Overall, this facility layout makes it easy to get where you want to go							
How do you feel about the staff in the establishment using the given scale below?								
Staff Expertise elements (Karatepe, 2011)		**1:** Strongly disagree	**2:** Disagree	**3:** Somewhat disagree	**4:** Neutral	**5:** Some what agree	**6:** Agree	**7:** Strongly agree
SE1	The staff in this establishment are experienced							
SE2	The staff are capable enough to deliver error-free services							
SE3	The staff are efficient							
SE4	The staff have the knowledge to respond to problems							
SE5	The staff does not give me personalized attention							
SE6	I feel the staff understands my needs							

Evaluate how the service provider manages time								
Speed of Service		**1:** Strongly disagree	**2:** Disagree	**3:** Somewhat disagree	**4:** Neutral	**5:** Some what agree	**6:** Agree	**7:** Strongly agree
SpS1	The service provider delivers its promises on time							
SpS 2	The waiting time was kept to a minimum							
SpS 3	The service took longer than planned							
SpS 4	The appointment system is effective							
SpS 5	There were no delays to the service process							
SpS 6	Generally, the speed of services is acceptable							
Please rate your recent experience with the service provider								
Customer Experience elements (Gao et al., 2020; Manyanga et al., 2022)		**1:** Strongly disagree	**2:** Disagree	**3:** Somewhat disagree	**4:** Neutral	**5:** Some what agree	**6:** Agree	**7:** Strongly agree
CE1	It is a pleasure for me to use this service provider							
CE2	This service provider meets my needs and covers my expectations							
CE3	I feel comfortable when I interact with this service provider							
CE4	The service provider handles customer problems well							
CE5	I don’t feel that this service provider cares about keeping me as a customer							
CE6	My overall experience was pleasant							

What is your level of satisfaction with the overall service provided?								
Customer Satisfaction elements (Setiawan, 2021)		1: Strongly disagree	2: Disagree	3: Somewhat disagree	4: Neutral	5: Some what agree	6: Agree	7: Strongly agree
CS1	The service provided was of a high standard							
CS2	The service I received exceeded my expectations							
CS3	My feelings towards the service provider are very positive							
CS4	Overall, I am satisfied with the service I received							
CS5	I feel that the service provider could produce the best results that can be achieved for me							
CS6	The overall feeling I get from this facility puts me in a good mood							
Please rate how you perceive the price of the service provided								
Perceived Price elements (Karatepe, 2011)		1: Strongly disagree	2: Disagree	3: Somewhat disagree	4: Neutral	5: Some what agree	6: Agree	7: Strongly agree
PP1	The price matches the service quality							
PP2	The price is affordable							
PP3	In relation to the service provided, the price is fair							
PP4	Prices affect my decision-making							
PP5	The service provider does not provide discounted prices							
PP6	The prices may be more expensive than other service providers							

Please rate your intentions to use the service provider again in the future								
Customer Loyalty elements (Jammine et al., 2019; Manyanga et al., 2022)		**1:** Strongly disagree	**2:** Disagree	**3:** Somewhat disagree	**4:** Neutral	**5:** Some what agree	**6:** Agree	**7:** Strongly agree
CL1	I am willing to visit this service provider again							
CL2	I highly recommend the service provider to other people							
CL3	I intend to continue getting a service from the service provide							
CL4	I don’t consider this service provider as my first choice for beauty services							
CL5	I am willing to maintain my relationship with the service provider							
CL6	I am loyal to this service provider							