

https://dspace.org/

The system design of a radar track-while-scan facility utilizing modern digital techniques

Henery, Michael

2015-01-26
http://hdl.handle.net/10539/16757

Downloaded from a DSpace repository. https://dspace.org/

the radar. One can see the range rings spaced 2km apart out to a range of 14km.

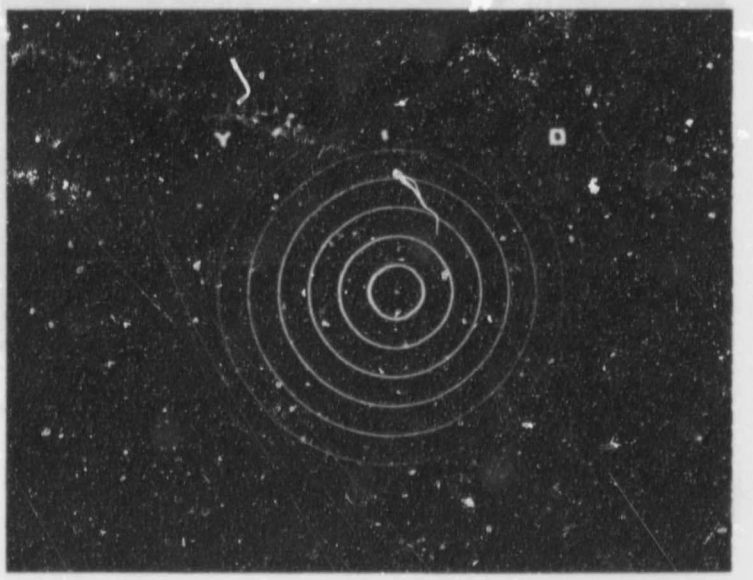

Figure 8.2 System PPI Display

Figure 8.3 illustrates a target track as observed by the camera. One can see that the target is not visible at all for the duration of the track since the symbol obscures the echo on the screen.

Because it is not possible to illustrate the results of the performance of the system a verbal description will be attempted.

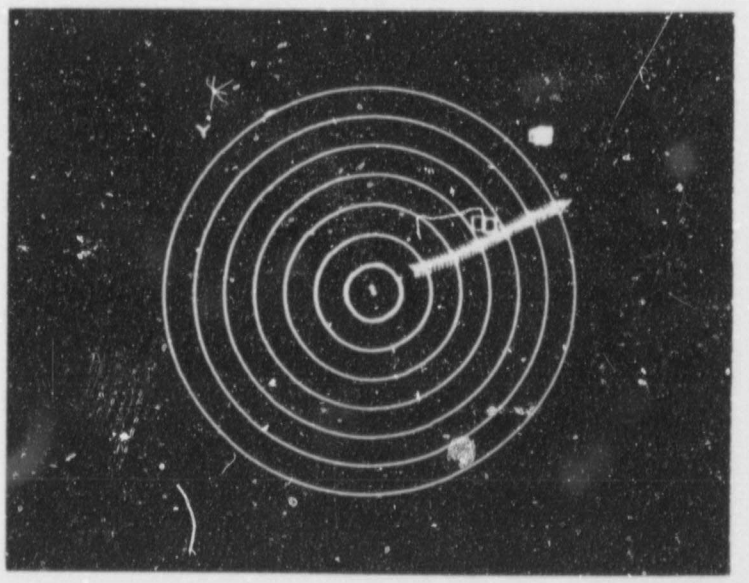

Figure 8.3 Target Track on the System PPI Display

It is possible to move the designation marker over the complete PPI display. The size of the marker is adequate enough to enable the operator to place the marker over the target during designation. Once the target has been designated the operator is free to move the designation marker away.

For targets flying though the area the filter was able to track the target with near-zero error after four to five scans across the target. This applied to virtually all aircraft considered in the limited testing of the system. For aircraft leaving Jan Smuts and flying through the area covered by the radar the system managed, without exception, to track the aircraft. The

same applied for aircraft arriving at Jan Smuts.

9.0 DISCUSSION

The large long-range radars presently in use at major airfields have facilities for tracking up to 1[illegible]0 targets simultaneously. These target tracks are implemented using either super-mini or mainframe computers. If the volume of traffic in the area is large and if the range expected from the radar is high then the use of these radars is justified.

However, in the case of the smaller airfield, where the number of aircraft within the airfield environment may only be one or two and the range required is only 20 km, then the use of the large radars is simply not feasible. Some means should therefore be made avaliable to allow short-range surveillance radars with the facility for a limited number of target tracks to be deployed at these airfields. By necessity these radars should be low cost yet effective.

A short-range surveillance radar of the type suitable for small airfield operation has been developed. To completely fulfill the requirement a Track-While-Scan facility was added to the radar to enable up to three target tracks to be implemented. This report detailed the design considerations of such a Track-While-Scan facility.

Because of the vast amount of literature avaliable on the subject a brief review of the various types of tracking filters was presented and the reader was introduced to the subject of

target tracking. Looking at the needs of the system typical target parameters were discussed and the system implementation around these parameters was described. It was then shown in limited tests that the system performed satisfactorily.

The particular type of filter chosen was the Benedict-Bordner Alpha-Beta filter employing a decaying value of alpha as the filter update aged. A fixed window size was thought to be adequate for the reason that the video emerging from the MTI filters was extremely clean.

Using an IBM PC to implement the tracking algorithm it was demonstrated that a single-board computer may be used to succesfully implement the Track-While-Scan facility. It would not require much further work to update the system to allow three target tracks.

Further research work may be conducted into finding optimal values of alpha as a function of filter update rate. The values of alpha adopted in the design were found to offer reasonable success, although they were by no means the final solution. The design also made use of a fixed window size. If it were found that the clutter levels should rise for some reason then a more elegant solution would make use of a dynamically varying window size dependent on the filter error. To increase the throughput of data by the filter the possibility of using more sophisticated languages to implement the tracking algorithm should also be investigated. A language like PASCAL would offer a significant increase in processor speed.

10.0 REFERENCES

BARTON, D Radar System Analysis. Prentice Hall, 1964

BENEDICT, T and BORDNER, G Synthesis of an Optimal Set of Radar Track While Scan Smoothing Equations IRE Trans. Automatic Control. Volume AC-7, 1962

BOZIC, S Digital and Kalman Filtering. Edward Arnold, 1979

BROOKER, G Design of the Tracking Complex for a Tracking Radar System. MSc Dissertation, University of the Witwatersrand, Johannesburg. December, 1983

COSTELLA, I and DUNNEBACKE, J Analytical Results for the X,Y Kalman Tracking Filter. IEEE Transactions an Aerospace and Electronic Systems. Volume AES-10, 1974

BROOKNER, E Tracking, Prediction, Smoothing. Boston IEEE, AESS Radar Technology Course, 1980

HOVANESSIAN, S Radar Detection and Tracking Systems. Artech House, 1973

MAYAITIS, J Comparison of an Alpha-Beta and Kalman Filter in Track While Scan Radars. MSc Dissertation, Naval Postgraduate School. Monterey Calif, December, 1979

MILLER, R Multiple Option Radar Tracking of a Single Target. Marconi Review. Volume XLIV, Number 220, 1981

MORRISON, N Tracking and Smoothing. Chapter 25, Radar Technology, Eli Brookner(ed). Artech House, 1978

SCHLEHER, C Automatic Detection and Radar Data Processing. Artech House, 1980

SHEATS, G The Kalman Filter. Chapter 26, Radar Technology, Eli Brookner(ed). Artech House, 1978

SINGER, R Estimating Optimal Tracking Filter Performance for Manned Manouvering Targets. IEEE Trans. Aerospace and Electronic Systems. Volume AES-6, 1970

SKOLNIK, M Introduction to Radar Systems. Second Ed. McGraw Hill, 1980

SKOLNIK, M Radar Handbook. McGraw Hill, 1970

STARK, S and TETEUR, J Radar and Sonar. Chapter 12, Modern Electrical Communications. Prentice Hall, 19'9

VAN DER MERWE, A The Alpha-Beta Filter. Report Number NIAST 81/28, June 1981

APPENDIX A

BRIEF DESCRIPTION OF SURVEILLANCE RADAR OPERATION

An elementary form of radar consists of a transmitting antenna emitting electromagnetic radiation generated by an oscillator , a receiving antenna and a receiver. A portion of the transmitted signal is intercepted by a reflecting object (target) and is re-radiated in all directions. The energy re-radiated in the direction of the radar is of prime interest to the system.

The receiving antenna collects the returned energy and delivers it to a receiver where it is processed to detect the presence of a target and to extract its position. The distance to the target is determined by measuring the time taken for the radar signal to travel to the target and back. The direction may be determined from the direction of arrival of the wavefront. The usual method of measuring the direction of arrival is with narrow antenna beams.

The most common radar waveform is a train of narrow, rectangular shaped pulses modulating a sine-wave carrier. The range to the target is determined by measuring the time T taken by the pulse to travel to the target and return. The velocity of propagation for electromagnetic energy is the speed of light, c. Thus

$$R = \frac{c}{2} T \text{ meters} \qquad \text{(A.1)}$$

The factor 2 appears because of the two-way propagation.

The frequency at which the pulses are transmitted is called the pulse repetition frequency (PRF).

Figure A.1 details a block diagram of the transmitter and receiver sections of a radar.

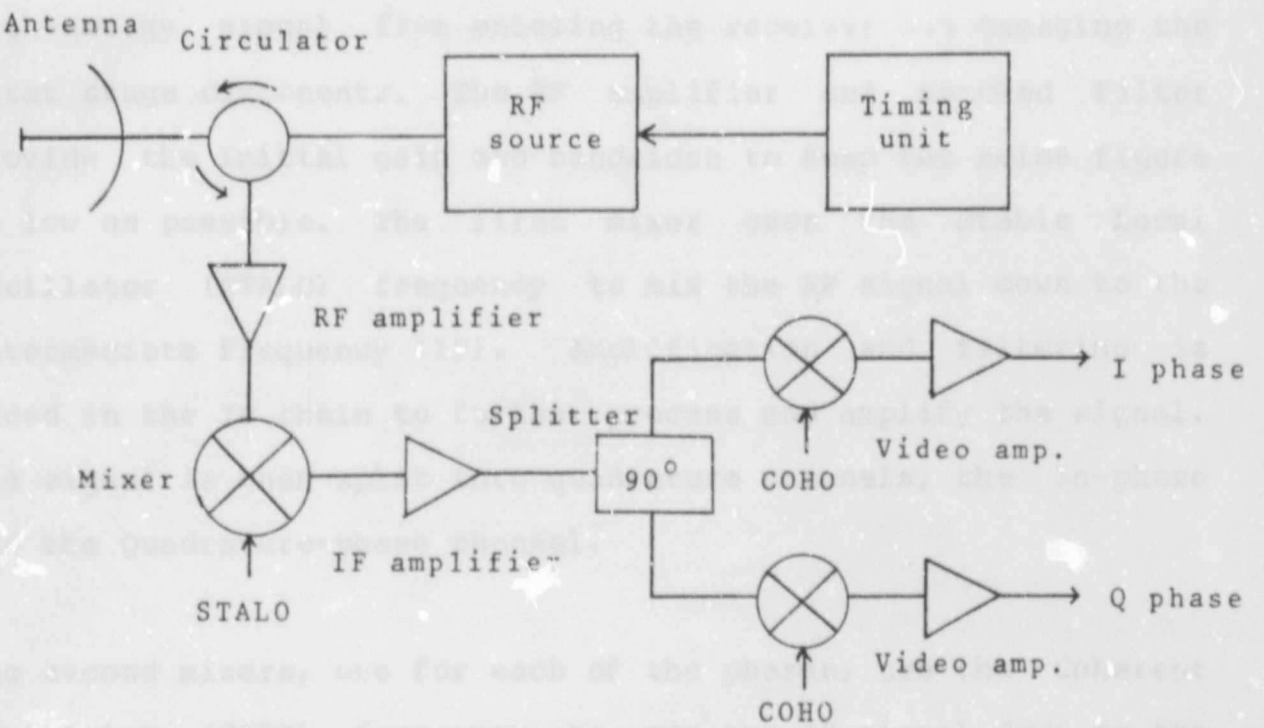

Figure A-1 Block Diagram of the Radar Receiver and Transmitter Sections

The timing unit controls all the timing functions necessary to control the radar. The RF source may be either a Magnetron, a Klystron or a Travelling Wave Tube (TWT) amplifier. The choice of RF source is usually governed by price and stability considerations, the Magnetron being the cheapest but least stable of the three units. The Klystron and TWT are essentially amplifiers in that an input signal at the required transmitter frequency but low power is amplified to a high power with the frequency remaining constant. The Magnetron, however, is triggered by a pulse from the timing unit and it emits a burst of RF energy at the required frequency, the length of the burst

being governed by the length of the trigger pulse.

While the pulse is being transmitted the circulator prevents the high-energy signal from entering the receiver and damaging the first stage components. The RF amplifier and matched filter provide the initial gain and bandwidth to keep the noise figure as low as possible. The first mixer uses the Stable Local Oscillator (STALO) frequency to mix the RF signal down to the intermediate frequency (IF). Amplification and filtering is added in the IF chain to further process and amplify the signal. The signal is then split into quadrature channels, the In-phase and the Quadrature-phase channel.

The second mixers, one for each of the phases, use the Coherent Oscillator (COHO) frequency to mix the IF signal down to the baseband signal. Once this has been accomplished the signal is referred to as the video signal. The reason for this is that in the early radar systems the baseband signal was displayed directly on the PPI dislpays, the signal thus being considered to be a video signal.

If the radar is referred to as a coherent system, the STALO signal and the COHO signal together are used to provide a signal to a linear amplifier for amplification to the RF signal. In a radar using a Magnetron as the RF source the phase of the transmitted signal varies on a pulse to pulse basis. If coherence is required then a low power sample of the transmitted signal is used to phase-lock the COHO frequency and this COHO signal will thus be in-phase with the transmitted signal for

being governed by the length of the trigger pulse.

While the pulse is being transmitted the circulator prevents the high-energy signal from entering the receiver and damaging the first stage components. The RF amplifier and matched filter provide the initial gain and bandwidth to keep the noise figure as low as possible. The first mixer uses the Stable Local Oscillator (STALO) frequency to mix the RF signal down to the intermediate frequency (IF). Amplification and filtering is added in the IF chain to further process and amplify the signal. The signal is then split into quadrature channels, the In-phase and the Quadrature-phase channel.

The second mixers, one for each of the phases, use the Coherent Oscillator (COHO) frequency to mix the IF signal down to the baseband signal. Once this has been accomplished the signal is referred to as the video signal. The reason for this is that in the early radar systems the baseband signal was displayed directly on the PPI dislpays, the signal thus being considered to be a video signal.

If the radar is referred to as a coherent system, the STALO signal and the COHO signal together are used to provide a signal to a linear amplifier for amplification to the RF signal. In a radar using a Magnetron as the RF source the phase of the transmitted signal varies on a pulse to pulse basis. If coherence is required then a low power sample of the transmitted signal is used to phase-lock the COHO frequency and this COHO signal will thus be in-phase with the transmitted signal for

that particular transmitted period. Such a system is referred to as a pseudo-coherent radar.

Figure A.2 details a block diagram of a typical signal processing unit.

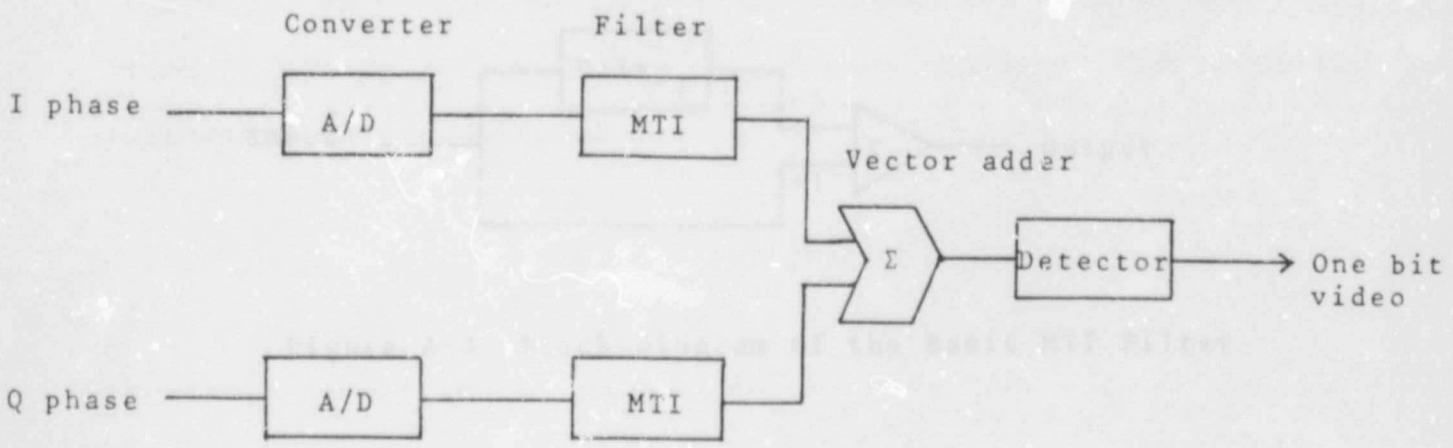

Figure A-2 Block Diagram of the Typical Signal Processor

The I and Q channels are digitised by fast video A/D converters. The digitised signals are then passed on to the Moving Target Indicator (MTI) filters. One would like only to display targets and filter out stationary clutter. If the target is moving relative to the radar it will have a radial Doppler frequency. For slow moving or stationary objects the frequency will be low or zero. The MTI filter is therefore required to be a high pass

filter capable of filtering out the low frequencies and passing the higher frequencies. This will then allow the moving target information through while stopping the stationary information. A filter is required in each of the I and Q channels.

Figure A.3 details a block diagram of the basic MTI filter.

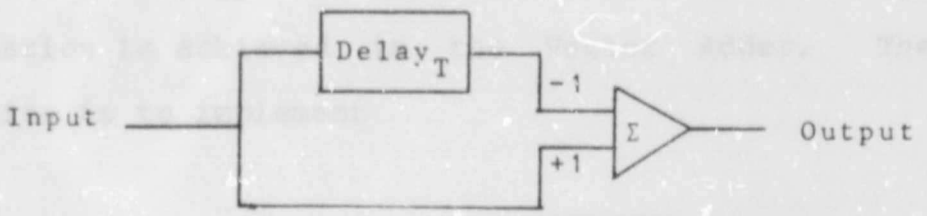

Figure A-3 Block Diagram of the Basic MTI Filter

The period T is the pulse repetition interval. Because the MTI filter is a sampled system, the filter will have its response duplicated around multiples of the sampling frequency. This means that for Doppler frequencies corrosponding to the inverse of the sampling period the output of the MTI filter will be zero. To overcome this problem one can stagger the pulse repetition interval so that the period between pulses is not fixed. The stagger sequence is calculated from a predetermined stagger relationship. The effect of staggering is to extend the response of the MTI filter so that the nulls in the response occur at a much higher frequency than the first, second, third etc sampling frequencies.

Figure A.4(a) details the response of the filter with no stagger and figure A.4(b) details the response with the stagger introduced.

The average pulse repetition frequency is referred to as the Mean PRF.

The signals emerging from the two MTI filters need to be combined vectorily, since the two signals are orthogonal. This combination is achieved in the Vector Adder. The required operation is to implement

$$\text{Output} = \sqrt{I^2 + Q^2} \qquad \text{(A.2)}$$

but this is seldom, if ever, done.
An approximation is to use

$$\begin{aligned} \text{Output} &= I + Q/2 \quad \text{for } I>Q \\ &= Q + I/2 \quad \text{for } Q>I \end{aligned} \qquad \text{(A.3)}$$

The signal from the Vector Adder must now pass to a digital detector. Various types of detectors are used.

One such detector is the m-out-of-n detector. As the radar scans across the target n echo pulses will be received. If m of these n expected pulses exceed a pre-determined value (threshold) a target may be declared to be present. The output of the detector is a single-bit value. Figure A.5 details a



(a) Response : no stagger

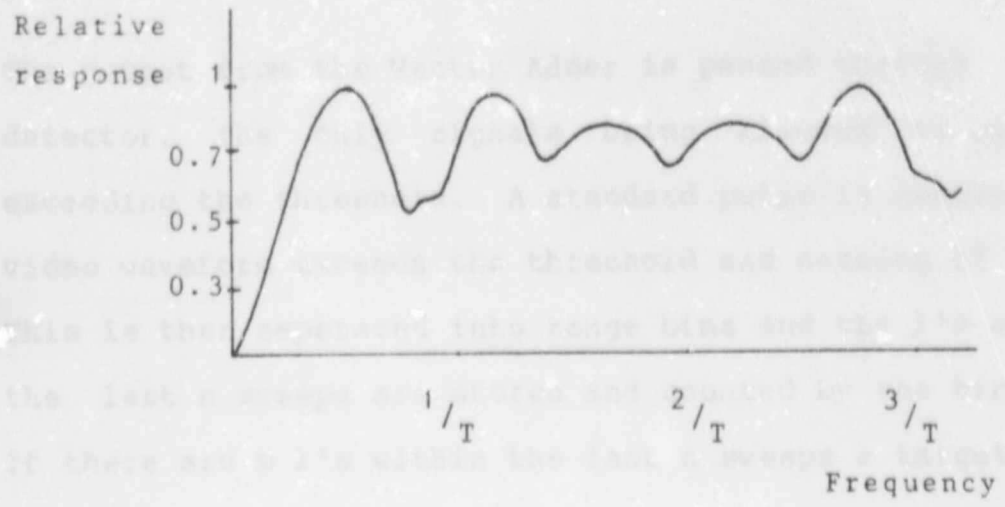

(b) Response : 2:1 stagger

Figure A.4 MTI Filter Response

block diagram of the m-out-of-n detector.

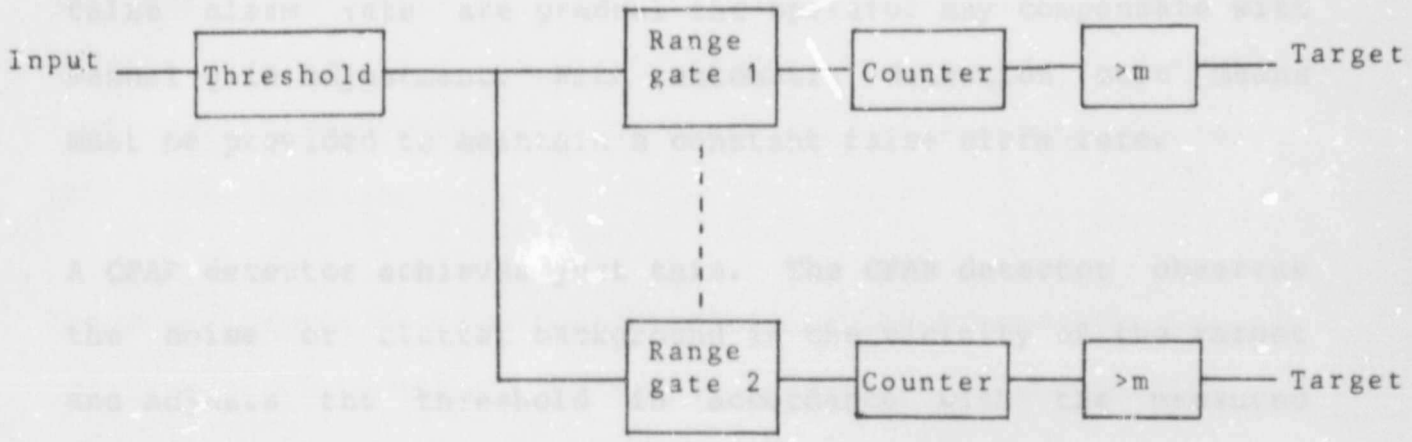

Figure A.5 Block Diagram of the m-out-of-n Detector

The output from the Vector Adder ia passed through a threshold detector, the only signals being allowed to pass are those exceeding the threshold. A standard pulse is generated if the video waveform exceeds the threshold and nothing if it does not. This is then seperated into range bins and the 1's and 0's from the last n sweeps are stored and counted by the binary counter. If there are m 1's within the last n sweeps a target is declared to be present.

Another method is the Constant False Alarm Rate (CFAR) detector. The threshold at the output of the receiver is chosen so as to achieve a desired false alarm probability. The false alarm rate

is quite sensitive to the threshold level. It does not take much of a drift in the receiver gain, a change in receiver noise, or the presence of external noise or clutter echoes to inundate the radar with extraneous echoes. If changes in the false alarm rate are gradual the operator may compensate with manual gain adjustment. With automatic detection some means must be provided to maintain a constant false alarm rate.

A CFAR detector achieves just this. The CFAR detector observes the noise or clutter background in the vicinity of the target and adjusts the threshold in accordance with the measured background. Figure A.6 illustrates the Cell-averaging CFAR detector.

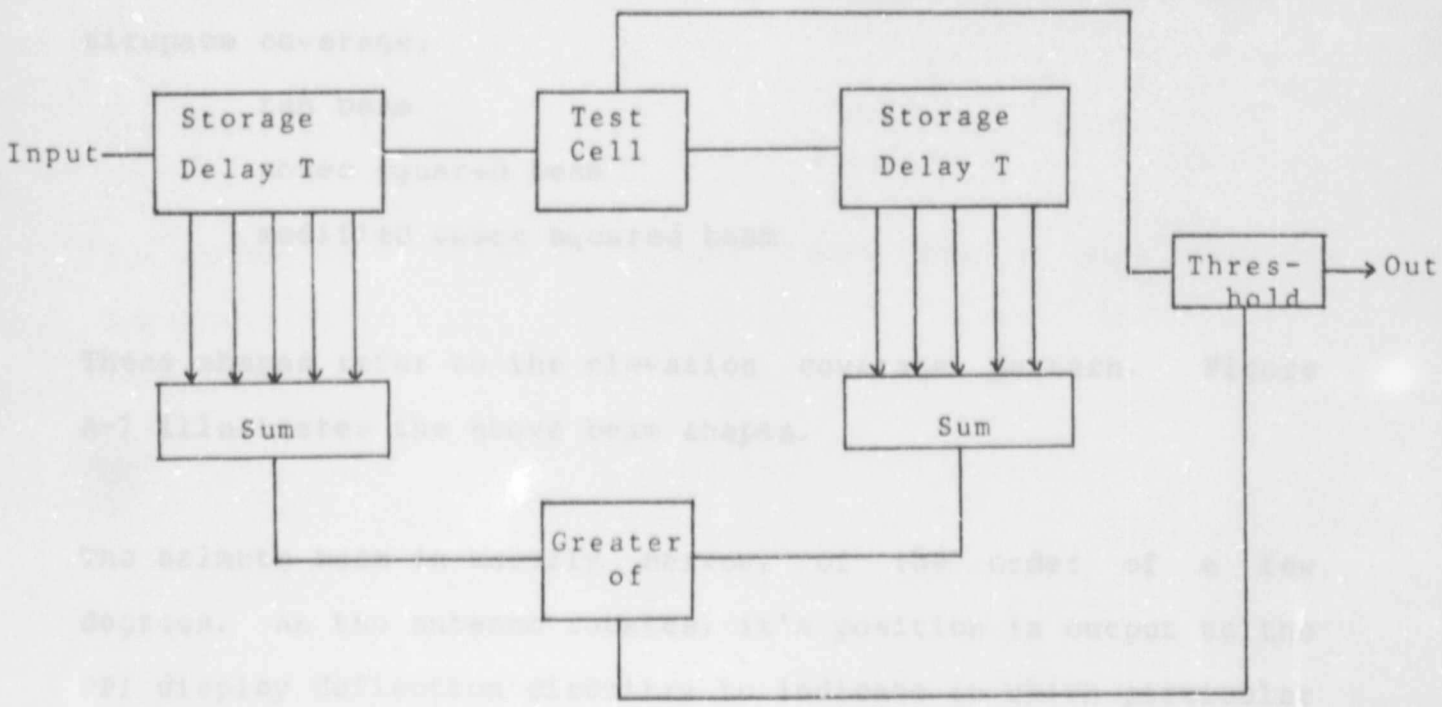

Figure A-6 Block Diagram of the Cell-averaging CFAR Detector

A digital storage element is used to sample the range cells to

either side of the range cell of interest, or test cell. The output of the test cell is the radar output. The output of the sampled elements is summed. This sum, when multiplied by the appropriate constant, determines the threshold level for achieving the desired probality of false alarm. Thus the threshold varies continuously according to the noise or clutter environment found within a range interval surrounding the range cell under observation.

The signal emerging from the detector is thus a one-bit yes/no indication of whether a target is present in the particular cell. This information is then passed onto the PPI display.

Various antenna beamshapes are adopted to provide the required airspace coverage:

fan beam

cosec squared beam

modified cosec squared beam

These shapes refer to the elevation coverage pattern. Figure A-7 illustrates the above beam shapes.

The azimuth beam is usually narrow, of the order of a few degrees. As tne antenna rotates, it's position is output to the PPI display deflection circuitry to indicate in which particular direction the antenna is presently pointing. The speed at which the antenna rotates is termed the scan rate. For long distance radars (200-300km) the typical scan rate may be about 6 rpm, while for short range radars (12-20km) the scan rate may be

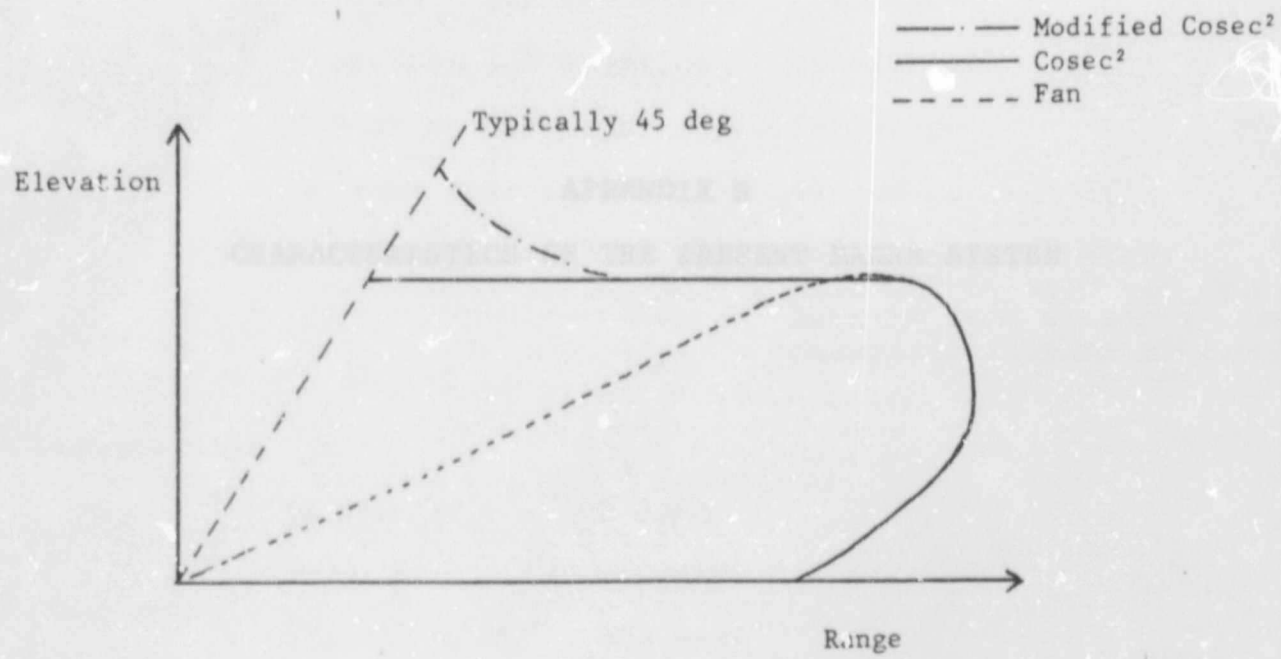

Figure A.7 Typical Antenna Elevation Coverage Patterns

increased to 60 rpm.

The reader is referred to Skolnik (1980) for a more complete introduction to radar systems.

APPENDIX B

CHARACTERISTICS OF THE PRESENT RADAR SYSTEM

Antenna:	Slotted waveguide array.	
	Azimuth 3dB beamwidth	1.4 degree
	Elevation 3dB beamwidth	30 degrees
	Elevation coverage	fan shape
	Antenna scan rate	40 rpm
	Antenna position	14-bit digital word. Bits D13-D4 used for TWS system. Bits D3 used to clock window generator azimuth extent.

Transmitter:

Magnetron	X BAND
Peak power	25 kWatt
Pulse length	400 nsec
PRF (mean)	2.5 kHz.

Receiver: Linear receiver with Superheterodyne conversion.

Full I and Q channels

Pseudo-coherent operation

Signal Processor:

MTI filter in each channel

Vector Adder

CFAR detector

Clock rate	2.5 MHz
All outputs	LS TTL compatible

Display:	PPI type display
	Max range 15km
	Range rings Every 2km

Intensity control for range rings and video.

APPENDIX C

EXPECTED TARGET PARAMETERS

Author Henery Michael
Name of thesis The System Design Of A Radar Track-while-scan Facility Utilizing Modern Digital Techniques. 1985

PUBLISHER:

University of the Witwatersrand, Johannesburg
©2013

LEGAL NOTICES:

Copyright Notice: All materials on the University of the Witwatersrand, Johannesburg Library website are protected by South African copyright law and may not be distributed, transmitted, displayed, or otherwise published in any format, without the prior written permission of the copyright owner.

Disclaimer and Terms of Use: Provided that you maintain all copyright and other notices contained therein, you may download material (one machine readable copy and one print copy per page) for your personal and/or educational non-commercial use only.

The University of the Witwatersrand, Johannesburg, is not responsible for any errors or omissions and excludes any and all liability for any errors in or omissions from the information on the Library website.