

https://dspace.org/

On uniquely packable trees

A Alochukwu; M Dorfling; Elizabeth Jonck

NATL INQUIRY SERVICES CENTRE PTY LTD
https://hdl.handle.net/10539/43476
WOS

Downloaded from a DSpace repository. https://dspace.org/

QM
QUAESTIONES MATHEMATICAE
JOURNAL OF THE SOUTH AFRICAN MATHEMATICAL SOCIETY
47(7) 2024

Quaestiones Mathematicae

ISSN: (Print) (Online) Journal homepage: www.tandfonline.com/journals/tqma20

On uniquely packable trees

A. Alochukwu, M. Dorfling & E. Jonck

To cite this article: A. Alochukwu, M. Dorfling & E. Jonck (2024) On uniquely packable trees, Quaestiones Mathematicae, 47:7, 1353-1368, DOI: 10.2989/16073606.2024.2321259

To link to this article: https://doi.org/10.2989/16073606.2024.2321259

Published online: 21 Mar 2024.

Submit your article to this journal

Article views: 27

View related articles

View Crossmark data

Citing articles: 1 View citing articles

Full Terms & Conditions of access and use can be found at
https://www.tandfonline.com/action/journalInformation?journalCode=tqma20

Quaestiones Mathematicae 2024, 47(7): 1353–1368
© 2024 NISC (Pty) Ltd
https://doi.org/10.2989/16073606.2024.2321259

ON UNIQUELY PACKABLE TREES

A. Alochukwu*
Department of Mathematics, Computer Science and Physics, Albany State University, USA, and
DSI-NRF Centre of Excellence in Mathematical and Statistical Sciences (CoE-MaSS), South Africa.
E-Mail alex.alochukwu@asurams.edu alex.alochukwu@wits.ac.za

M. Dorfling
Department of Mathematics and Applied Mathematics, University of Johannesburg, South Africa.
E-Mail mdorfling0@gmail.com

E. Jonck
School of Mathematics, University of the Witwatersrand, Johannesburg, South Africa, and
DSI-NRF Centre of Excellence in Mathematical and Statistical Sciences (CoE-MaSS), South Africa.
E-Mail Betsie.Jonck@wits.ac.za

Abstract. An i-packing in a graph G is a set of vertices that are pairwise at distance more than i. A *packing colouring* of G is a partition $X = \{X_1, X_2, \ldots, X_k\}$ of $V(G)$ such that each colour class X_i is an i-packing. The minimum order k of a packing colouring is called the packing chromatic number of G, denoted by $\chi_\rho(G)$. In this paper we investigate the existence of trees T for which there is only one packing colouring using $\chi_\rho(T)$ colours. For the case $\chi_\rho(T) = 3$, we completely characterise all such trees. As a by-product we obtain sets of uniquely 3-χ_ρ-packable trees with monotone χ_ρ-colouring and non-monotone χ_ρ-colouring respectively.

Mathematics Subject Classification (2020): 05C15, 05C70.
Key words: Colouring, broadcast, packing, tree, uniquely colourable, monotone colouring, packing chromatic number.

1. Introduction. Packing colourings were inspired by a frequency assignment problem in broadcasting. The distance between broadcasting stations is directly related to the frequency they may receive, since two stations may only be assigned the same frequency if they are located far enough apart for their frequencies not to interfere with each other. This colouring was first introduced by Goddard et

*Corresponding author. Financial support by the DSI-NRF Centre of Excellence in Mathematical and Statistical Sciences (CoE-MaSS), South Africa, is gratefully acknowledged.

al. [14] where it was called *broadcast colouring*. Brešar et al. [5] were the first to use the term packing colouring.

Let $G = (V(G), E(G))$ be a simple graph of order n and let i be a positive integer. A set $X \subseteq V(G)$ is called an *i-packing* if vertices in X are pairwise distance more than i apart. A *packing colouring* of G is a partition $X = \{X_1, X_2, \ldots, X_k\}$ of $V(G)$ such that each colour class X_i is an i-packing. Hence, two vertices may be assigned the same colour if the distance between them is greater than the colour. The minimum order k of a packing colouring is called the *packing chromatic number* of G, denoted by $\chi_\rho(G)$.

Note that every packing colouring is a proper colouring. For terms and concepts not defined here, see [7].

Goddard et al. [14] investigated among other things, the packing chromatic number of paths, trees and the infinite square lattice, Z^2. They found that for a tree of diameter two (that is, a star) the packing chromatic number is 2; for a tree of diameter three the packing chromatic number is 3, and for a tree of diameter 4, they gave an explicit formula based on the number of large neighbors (degree 4 or more) and small neighbors (degree 3 or less) of the central vertex. They proved also that for all trees T of order n it holds that $\chi_\rho(T) \leq \frac{n+7}{4}$, except when $n = 4$ or $n = 8$ (when the bound is $\frac{1}{4}$ more) and these bounds are sharp. Furthermore they proved that the minimum order of a tree T with $\chi_\rho(T) = 2$, is 2; for a tree T with $\chi_\rho(T) = 3$, the minimum order is 4 and for a tree with $\chi_\rho(T) = 4$, the minimum order is 8.

The packing chromatic number of lattices, trees, and Cartesian products in general is also considered in [5, 18, 17, 8, 11, 12] and [15]. Determining the packing chromatic number is considered to be difficult. Finding χ_ρ for general graphs is NP-hard [14], and in fact, deciding whether $\chi_\rho(G) \leq 4$ is already NP-complete. In [10], Fiala and Golovach showed that the decision whether a tree allows a packing colouring with at most k classes is NP-complete.

Brešar, Klavžar and Rall introduced monotone colourings in [5]. Let G be a graph. For a colouring $c : V(G) \to \{1, \ldots, k\}$, and a colour l, $1 \leq l \leq k$, we denote by c_l the cardinality of the class of vertices coloured by l. A $\chi_\rho(G)$-colouring is monotone if $c_1 \geq c_2 \geq \cdots \geq c_k$. They proved that for any graph G and any l, where $l \leq \left\lfloor \frac{\chi_\rho(G)}{2} \right\rfloor$, there exists a $\chi_\rho(G)$-colouring $c : V(G) \to \{1, ..., k\}$ such that $c_l \geq c_j$ for all $j \geq 2l$. Note that this implies that for any graph G there exists an optimal colouring in which $c_1 \geq c_i$ for $2 \leq i \leq k$. They also showed however, that there exists a class of trees T_k, $k \geq 2$, in which no optimal colouring is monotone. The authors proved that for any $k \geq 2$, $\chi_\rho(T_k) = 3$ and moreover, there exists a *unique* optimal colouring of T_k with $c_1 = k+5$, $c_2 = 2$ and $c_3 = k+1$. In particular, $c_3 > c_2$.

Several researchers have also investigated related topics on the packing chromatic number and packing colourings for specific graph types, see [3, 6, 1, 2, 9, 13, 19] for results on cubic graphs, subdivided plane graphs, Petersen graphs, Moore graphs, subcubic outerplanar graphs etc. In addition, an integer linear programming and a satisfiability test model for the packing colouring problem of graphs were developed in [16]. The proposed models in [16] outperforms other exact meth-

ods such as a back-tracking and dynamic algorithm.

Given the volume of publications that have been written on the packing chromatic number and its growing interest, we refer the reader to the survey article [4] on packing colourings by Brešar et al. for more details.

We call a graph G uniquely k-χ_ρ-packable if $\chi_\rho(G) = k$ and G has a unique packing colouring of order k. By uniqueness of a packing colouring we mean uniqueness up to identity. In other words, we work with labelled graphs. For instance, K_2 has packing chromatic number 2, but is not uniquely 2-χ_ρ-packable.

The following terminology is used throughout: Given a graph G and a colouring of $V(G)$, an *i-vertex* is a vertex of colour i. We similarly use the terms *i-neighbour* and *i-leaf*. We also use these terms if G is uniquely colourable, even if no colouring is specified.

In this paper we investigate uniquely-packable trees. We characterise the uniquely 3-χ_ρ-packable trees, and investigate the existence of uniquely k-χ_ρ-packable trees for $k > 3$. Our characterisation is constructive. We proved that a tree is uniquely 3-χ_ρ-packable if and only if it can be constructed from one of the three trees described in Figure 1 by iteratively applying some finite sequence of operations as described in 2.1. Furthermore, we showed that the monotonicity of the packing colourings can also be determined by performing the same operations. As a by-product of our investigation, we obtain sets of uniquely 3-χ_ρ-packable trees with monotone χ_ρ-colouring and non-monotone χ_ρ-colouring respectively.

The remainder of this paper is organised as follows. In Section 2 we characterise those trees that are uniquely 3-χ_ρ-packable and describe all operations that would be useful when constructing uniquely 3-χ_ρ-packable trees. Section 3 investigates the monotonicity of the packing colourings, by considering the three graphs, from which all uniquely 3-χ_ρ-packable trees are constructed and show that their colourings are monotone. This leads us to establishing sets of uniquely 3-χ_ρ-packable trees with monotone χ_ρ-colouring and non-monotone χ_ρ-colouring respectively. In the concluding Section 4.1 we considered the existence of uniquely k-χ_ρ-packable trees for $k > 3$ and present a way to construct such trees for $4 \leq k \leq 7$.

2. Uniquely 3-χ_ρ-packable trees.

In this section we characterise those trees that are uniquely 3-χ_ρ-packable. The special case of Claim 1 with $k = 3$ and Lemma 1 will be used repeatedly throughout this section.

Claim 1. *If c is a k-χ_ρ-packing of a graph G, then every 1-vertex v has degree at most $k - 1$.*

Proof. Since no two neighbours of v can have the same colour because of the distance restraint between vertices of the same colour, v is adjacent to at most $k - 1$ vertices. □

Lemma 1. *If c is a 3-χ_ρ-packing of a graph G with a 2-vertex x adjacent to a 3-vertex y, then all neighbours of x other than y have colour 1 and these vertices have no neighbours other than x.*

Proof. Clearly, vertices of G can only be coloured with colours 1, 2 or 3 since c is a 3-χ_ρ-packing of the graph G. As a result, all neighbours of x other than y can only have colour 1 because colour 2 and colour 3 are not possible due to the distance constraint in the definition of a packing colouring. In addition, observe that a 1-neighbour of the 2-vertex x does not have any new neighbour since since such a vertex can't be coloured in a 3-χ_ρ-packing of G. □

2.1. Characterisation of uniquely 3-χ_ρ-packable trees. Our characterisation is constructive. We start with one of the coloured trees depicted in Figure 1, and iteratively apply one of the operations described below and depicted in Figure 2. This produces all uniquely 3-χ_ρ-packable trees, and only such trees, with the unique 3-colouring assigned.

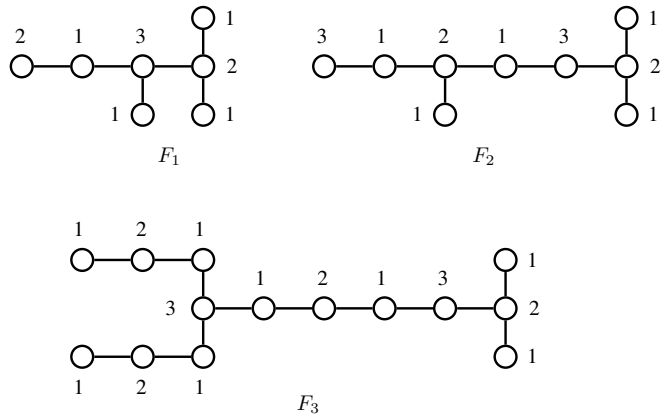

Figure 1: The three graphs from which all uniquely 3-χ_ρ-packable trees are constructed.

$\mathcal{O}_1$ Attach a new 1-vertex to a 2-vertex.

$\mathcal{O}_2$ Attach a new 1-vertex to a 3-vertex that has a 2-neighbour.

$\mathcal{O}_3$ Attach a new 2-vertex to a 1-vertex that has no 2-neighbours.

$\mathcal{O}_4$ Attach a new 3-vertex to a 1-vertex that is at distance at least 3 from all 3-vertices.

$\mathcal{O}_5$ Let u be a 3-vertex. Add a path $P : v_1, v_2, v_3$, and the edge uv_1. Give v_1, v_2 and v_3 the colours 1, 2 and 1, respectively.

Note that $\mathcal{O}_5$ is a combination of $\mathcal{O}_2, \mathcal{O}_3$ and $\mathcal{O}_1$ if u has a 2-neighbour.

$\mathcal{O}_6$ Let u be a 3-vertex with no 2-neighbour. Add a path $P : v_1, v_2, v_3$, and the edge uv_2. Give v_1, v_2, and v_3 the colours 1, 2 and 1, respectively.

$\mathcal{O}_7$ Replace an edge uv, where $c(u) = 3$, $c(v) = 1$, and $\deg(u) = 2$, with a path u, w_1, w_2, w_3, w_4, v. Assign the colours 1,2,1 and 3 to w_1, w_2, w_3, and w_4, respectively.

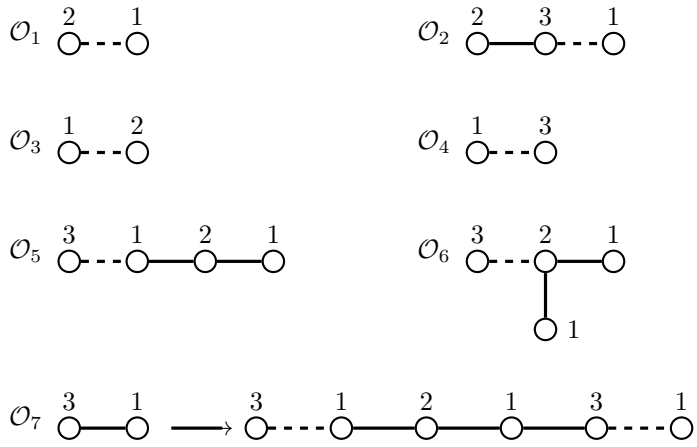

Figure 2: The seven operations used to construct all uniquely 3-χ_ρ-packable trees.

Lemma 2.

1 *F_1, F_2 and F_3 are uniquely 3-χ_ρ-packable.*

2 *If any of the operations $\mathcal{O}_i$ is applied to a uniquely 3-χ_ρ-packable tree T', the resulting tree T is uniquely 3-χ_ρ-packable.*

3 *If a uniquely 3-χ_ρ-packable tree T is obtained from a tree T' using operation $\mathcal{O}_7$, then T' is uniquely 3-χ_ρ-packable.*

Proof.

1 This is easily verified by inspection.

2 In the case of $\mathcal{O}_2$, $\mathcal{O}_5$ or $\mathcal{O}_6$, the new vertices can only be coloured in one way, given the colours of the existing vertices.

For $\mathcal{O}_1$, note that the existing 2-vertex must be at distance at most 2 from a 3-vertex, otherwise T' is a star, which is not uniquely 3-χ_ρ-packable. The new vertex can therefore only receive colour 1. Similar arguments apply to $\mathcal{O}_3$ and $\mathcal{O}_4$.

Next, we prove the lemma for the case of $\mathcal{O}_7$.

Let T be obtained from T' by $\mathcal{O}_7$, and let u, v and w_i be as in the description of $\mathcal{O}_7$. Let c' be the unique 3-χ_ρ-packing of T' and let c be a 3-χ_ρ-packing of T that differs from the 3-χ_ρ-packing produced by $\mathcal{O}_7$.

If $c(u) = 3$ and $c(v) = 1$, there is only one way to colour the w_i's, and restricting c to T' yields a 3-χ_ρ-packing of T' different from c', contradicting the uniqueness of c'. Similarly if $c(u) = 1$ and $c(v) = 3$, or $c(u) = 2$ and $c(v) = 1$, or $c(u) = 1$ and $c(v) = 2$.

Suppose $c(u) = 3$ and $c(v) = 2$. Again there is only one way to colour the w_i's ($c(w_1) = 1, c(w_2) = 2, c(w_3) = 1, c(w_4) = 3$). Now suppose that restricting c to T' does not yield a proper colouring. Then the neighbour x of u other than w_1 must have colour 2. Since $c(w_4) = 3$ and $c(v) = 2$, and $c(u) = 3$ and $c(x) = 2$, it follows that T' is obtained from two stars with centers corresponding to x and v by identifying a leaf (corresponding to u) from each. But such a graph is not uniquely 3-χ_ρ-packable.

A similar argument applies if $c(u) = 2$ and $c(v) = 3$.

We cannot have $c(u) = c(v) = 2$ or $c(u) = c(v) = 3$, since there is no way to colour the w_i's. That leaves $c(u) = c(v) = 1$: The only possibility is for w_1, w_2, w_3 and w_4 to be coloured 2, 1, 3 and 2, respectively. (The fact that u has degree 2 eliminates 2, 3, 1, 2.) So v has degree 1 and we can change its colour to 2 and restrict to T' to obtain a valid colouring of T' that differs from c' on u.

3 Let c be the unique 3-χ_ρ-packing of T, suppose that T' is not uniquely 3-χ_ρ-packable and let c' be a 3-χ_ρ-packing that differs from c on T'. Let u and v be the 3- and 1-vertices (under c) of T' to which $\mathcal{O}_7$ is applied, respectively. We consider the following cases: (Note that cases 2, 4, and 6 are not symmetric to their counterparts, because of the degree constraint on u. This only plays a role in Case 5 and Case 6 though.)

Case 1: $c'(u) = 3$ and $c'(v) = 1$.
We extend c' to T by colouring w_1, w_2, w_3 and w_4 with 1, 2, 1 and 3, respectively, to contradict the uniqueness of c.

Case 2: $c'(u) = 1$ and $c'(v) = 3$.
We can reverse the sequence of colours in Case 1 above, that is extend c' to T by colouring w_1, w_2, w_3 and w_4 with 3,1,2 and 1, respectively.

Case 3: $c'(u) = 3$ and $c'(v) = 2$.
We extend c' to T by colouring w_1, w_2, w_3 and w_4 with 1, 2, 1 and 3, respectively.

Case 4: $c'(u) = 2$ and $c'(v) = 3$.
We reverse the sequence in Case 3, that is extend c' to T by colouring w_1, w_2, w_3 and w_4 with 1, 3, 1 and 2, respectively, to contradict the uniqueness of c.

Case 5: $c'(u) = 1$ and $c'(v) = 2$.
The other neighbour w of u can only have $c'(w) = 3$, so v has no 3-neighbour under c' and we can extend c' to T by colouring w_1, w_2, w_3 and w_4 with 2, 1, 3 and 1, respectively..

Case 6: $c'(u) = 2$ and $c'(v) = 1$.
If the other neighbour w of u has $c'(w) = 1$, we extend c' to T by colouring

w_1, w_2, w_3 and w_4 with 1, 3, 1 and 2, respectively. Otherwise, $c'(w) = 3$, so by Lemma 1, v has no other neighbours. Here we change the colour of u to 1, and colour w_1, w_2, w_3 and w_4 with 2, 1, 3 and 2, respectively. Although we changed the colour of u, the extended colouring does differ from c because $c'(w) = 3$ but $c(w) \neq 3$ as $c(u) = 3$.

All other cases are ruled out by the fact that uv is an edge of T'. □

Lemma 3. *If G is a uniquely 3-χ_ρ-packable graph, then G has a 2-vertex adjacent to a 3-vertex.*

Proof. Let c be the unique 3-χ_ρ-packing of G and suppose no 2-vertex is adjacent to a 3-vertex. Then no two 2-vertices x and y are at distance 3, otherwise both u and v on any path x, u, v, y must have colour 1. But then we can interchange the colour classes 2 and 3, contradicting the uniqueness of c. □

Lemma 4. *Let $F \subseteq T$ be trees, where F is uniquely 3-χ_ρ-packable, and let v be any 3-vertex of F. For any 3-χ_ρ-packing c of T, the 3-vertices are precisely those vertices whose distance from v is a multiple of 4.*

Proof. Let u be any vertex other than v and consider the unique v–u path $P : v, v_1, \ldots, v_k = u$. There are two possibilities for $c(v_1)$, that is, $c(v_1) = 2$ or $c(v_1) = 1$. If $c(v_1) = 2$, then $c(v_2) = 1$ (if v_2 exists). It follows immediately from Lemma 1 that $k \leq 2$. Otherwise, $c(v_1) = 1$, $c(v_2) = 2$, $c(v_3) = 1$ and $c(v_4) = 3$ (if these vertices exist). Next, if v_5 exists, then there are again two possibilities for $c(v_5)$ that is, $c(v_5) = 2$ or $c(v_5) = 1$. Thus, repeating the above process and continuing in this way the result follows. □

An immediate consequence of Lemma 4 is the following, which we will use repeatedly henceforth.

Lemma 5. *Let $F \subseteq S \subseteq T$ be trees, where F is uniquely 3-χ_ρ-packable, and let c be any 3-χ_ρ-packing of T. For every $u \in V(S)$ and every 3-χ_ρ-packing c' of S, we have $c'(u) = 3$ iff $c(u) = 3$.*

Proof. Let $F \subseteq S$. Since F is uniquely 3-χ_ρ-packable and c' a 3-χ_ρ-packing on S, we have by Lemma 4 that for each $v \in V(F)$ with $c(v) = 3$, the 3-vertices in S are those at distance $4i, i \in \mathbb{N}$, from v. Next, let $F \subseteq T$. Since F is uniquely 3-χ_ρ-packable and c a 3-χ_ρ-packing on T, a similar argument shows that for each $v \in V(F)$ with $c(v) = 3$, the 3-vertices in T are those at distance $4i, i \in \mathbb{N}$, from v. Hence $c'(u) = 3$ iff $c(u) = 3$ for all $u \in V(S)$. □

Theorem 6. *A tree T is uniquely 3-χ_ρ-packable iff it is obtained from F_1, F_2 or F_3 by zero or more applications of the operations $\mathcal{O}_i$, $i = 1, \ldots, 7$.*

Proof. It follows from the first two parts of Lemma 2 that all trees obtained in this way are uniquely 3-χ_ρ-packable.

For the converse, let T be a counterexample of minimum order. So, T is uniquely 3-χ_ρ-packable but T cannot be obtained from any smaller uniquely 3-χ_ρ-packable tree using the operations $\mathcal{O}_i$, $i = 1, \ldots, 7$. Let $c : V(T) \to \{1, 2, 3\}$ be the 3-χ_ρ-packing of T.

Claim: T contains F_1, F_2 or F_3 as a subgraph.

Let, according to Lemma 3, x and y be adjacent vertices with colours 2 and 3, respectively. By Lemma 1, all other neighbours of x have colour 1 and can have no further neighbours. Moreover, we show that there are at least two vertices of colour 1 adjacent to x in T. If none, we can recolour x with 1 and so T is not uniquely 3-χ_ρ-packable. If there exists a unique vertex of colour 1 adjacent to x, say u_1, then we can give u_1 colour 2 and x colour 1. This again is a contradiction to the fact that T is uniquely 3-χ_ρ-packable.

Let $P : u_1, x, y, u_2, u_3, \ldots, u_\ell$ be a longest path with end-vertex u_1. We must have $\ell \geq 3$, otherwise T is clearly not uniquely 3-χ_ρ-packable.

If y has degree at least 3, then T contains F_1. Now assume $\deg(y) = 2$. Since u_2 has colour 1, it follows from Claim 1 that u_2 has degree 2. If $\ell < 5$, then c is not unique (interchange the colours of y and u_2). Assume therefore that $\ell \geq 5$.

Now if $\deg(u_3) > 2$, we have F_2 as subgraph, so let $\deg(u_3) = 2$. Since $c(u_4) = 1$ we also have $\deg(u_4) = 2$. Again, if $\ell = 5$, then c is not unique since vertices of P : u_1, x, y, u_2, u_3, u_4, u_5 can be coloured $1, 2, 1, 3, 1, 2, 1$.

Therefore $\ell \geq 6$. Suppose first that u_5 has a 2-neighbour v. If v is adjacent to one vertex, say v_1, then the colours of v and v_1 can be interchanged, which implies that c is not unique. It follows that v has at least two neighbours other than u_5 (these have colour 1) and they have no neighbours other than v. If $\deg(u_5) > 2$, T contains F_1, and so we let $\deg(u_5) = 2$. But then c is not unique since we can colour vertices u_1, x, y, u_2, u_3, u_4, u_5, v with $1, 2, 1, 3, 1, 2, 1$ and 3, respectively.

Suppose now that all neighbours of u_5 have colour 1. Any such neighbour z must have a 2-neighbour w, otherwise we can change the colour of z to 2 and u_5 has a 2-neighbour as in the argument above. Also, w must have another 1-neighbour, otherwise the colours of z and w can be switched. Now, if $\deg(u_5) > 2$, T contains F_3. Otherwise if $\deg(u_5) = 2$, then T is obtained from a smaller uniquely 3-χ_ρ-packable tree by $\mathcal{O}_7$, using Lemma 2(3), which is a contradiction.

Note that "being k-χ_ρ-packable" is an hereditary property of graphs: If a graph G has the property, so does any subgraph H of G, since for any two vertices u, v in $X_i \cap V(H)$, where X_i is an i-packing in G, the following holds: $d_H(u, v) \geq d_G(u, v) \geq i + 1$.

Now we prove that any uniquely 3-χ_ρ-packable tree T can only be obtained from F_i, $i = 1, 2$ or 3.

Let F be the subtree F_1, F_2 or F_3 of the claim. If $T = F$ we are done, so let x be a leaf of T that is not in F, and let u be its neighbour. We consider the following cases.

Case 1: $c(x) = 2$.
Since $c(x) = 2$, we have that $c(u) = 1$, otherwise we can set $c(x) = 1$, contradicting the uniqueness of c. Then u has degree 2 and its neighbour other than x, say w, must have colour 3.

Let $T' = T - x$. If T' is uniquely 3-χ_ρ-packable, the minimality of T is contradicted, since T is obtained from T' using $\mathcal{O}_3$. So let c' be a 3-χ_ρ-packing of T' that differs from c on T'.

We must have $c'(u) = 1$, otherwise we can extend c' to T, by setting $c'(x) = 1$, to obtain a colouring of T that differs from c. By Lemma 5, $c'(w) = 3$, so we can set $c'(x) = 2$ and again obtain a colouring of T different from c, contradicting the fact that c is a uniquely 3-χ_ρ-packing of T.
Case 2: $c(x) = 3$.
Clearly, $c(x) = 3$ implies that $c(u) = 1$, otherwise we can set $c(x) = 1$, contradicting the uniqueness of c. Then u has degree 2 and its neighbour other than x, say w, must have colour 2. Let $T' = T - x$. By the minimality of T and the fact that T is obtained from T' using $\mathcal{O}_4$, there is a 3-χ_ρ-packing c' of T' that differs from c on T'. Again, $c'(u) = 1$, following a similar argument as in Case 1 above.

From Lemma 5 it follows that we can extend c' to T by setting $c'(x) = 3$, contradicting the uniqueness of c.
Case 3: $c(x) = 1$. For this case, we have two possibilities for $c(u)$.

- $c(u) = 3$.
  If $c(u) = 3$, then u must have a 2-neighbour, otherwise we can change $c(x)$ to 2, contradicting the uniqueness of c. Again, if we let $T' = T - x$, then by the minimality of T, and the fact that T is obtained from T' using $\mathcal{O}_2$, there is a 3-χ_ρ-packing c' of T' that differs from c on T'. Hence, it follows from Lemma 5 that any colouring of T' can be extended to T by giving x colour 1, and a contradiction follows as before.

- $c(u) = 2$.
  Let $T' = T - x$ and let c' be a 3-packing colouring of T' that differs from c on T'. Such a colouring c' exists by the minimality assumption of T and the fact that T is obtained from T' by applying $\mathcal{O}_1$.

  Suppose first that the degree of u is at least 4 in T (that is at least 3 in T'). Then, $c'(u) \neq 1$ by Claim 1, and we can extend c' to T by letting $c'(x) = 1$. This contradicts our assumption that T is uniquely 3-χ_ρ-packable since c and c' differ on at least one vertex of T'. Thus, we now assume that the degree of u in T is either 2 or 3.

  Suppose that $\deg(u) = 2$. Let v be the other neighbour of u. Then $c(v) = 1$, otherwise we can swap the colours of x and u. Now, v has degree 2 and its other neighbour, w say, has colour 3. Let T' be obtained from T by removing those of x, u and v that do not belong to F. (If $u \in V(F)$, then so is v, hence T' is a tree.) Note that T is obtained from T' using some combination of $\mathcal{O}_1$, $\mathcal{O}_2$ and $\mathcal{O}_3$ in most cases. If $T' = T - \{x, u, v\}$, then T can be obtained from T' by using $\mathcal{O}_5$. Consider a 3-χ_ρ-packing c' of T' that differs from c on T'. By Lemma 5 we have $c'(w) = 3$. Those of u and v that belong to F can only

be coloured as by c. Those not belonging to F can be replaced, together with x, and coloured as by c, contradicting the uniqueness of c.

Therefore, we have $\deg(u) = 3$. Let y and z be the other two neighbours of u. Suppose first that both have colour 1. One of them, say y, must have another neighbour w, which can only have colour 3. Since $T' = T - x$ and considering that in any 3-χ_ρ-packing c' of T', we have $c'(w) = 3$ by Lemma 5, there is only one way to colour u, y and z, hence a contradiction with the minimality of T follows.

So y, say, has colour 1 and z has colour 3. Examining the graphs F_i, it is easily checked that u and y cannot belong to F. (Note that y has degree 1.) We remove x, y and u to obtain T', note that T is obtained from T' using $\mathcal{O}_6$ and consider a 3-χ_ρ-packing c' of T' that differs from c on T'.

By Lemma 5, $c'(z) = 3$. If z has no neighbour w with $c'(w) = 2$, we are done, as c' can be extended to T in the obvious way, so suppose that such a w exists. We must have $c(w) = 1$, so, since $c'(w) \neq c(w)$, we cannot have $w \in V(F)$, because F is uniquely 3-χ_ρ-packable. If w is a leaf we therefore have the case $c(u) = 3$, so suppose w has another neighbour s. Then $c'(s) = 1$, $c(s) = 2$ and s is a leaf (considering $c'(z) = 3$ and $c'(w) = 2$). Therefore we have Case 1 and the proof is complete. □

3. Monotonocity of the packing colouring. In this section, we consider the three graphs, F_1-F_3, described in 2.1, from which all uniquely 3-χ_ρ-packable trees are constructed and show that their colourings are monotone. In addition, we show that by iteratively applying any one of the operations $\mathcal{O}_1 - \mathcal{O}_7$, we show that there exists a uniquely 3-χ_ρ-packable tree, T_k, with no monotone χ_ρ-colouring. As a by-product we obtain sets of uniquely 3-χ_ρ-packable trees with monotone χ_ρ-colouring and non-monotone χ_ρ-colouring respectively.

Definition 7. Let G be a graph. For a colouring $c : V(G) \to \{1, 2, 3\}$, and a colour m, $1 \leq m \leq 3$, let $c_m = |\{v \in V(G) : c(v) = m\}|$, that is, c_m is the cardinality of the class of vertices, coloured by m. We say that c is monotone if

$$c_1 \geq c_2 \geq c_3.$$

Proposition 8. ([5]) *For any graph G and any m, where $m \leq \lfloor \chi_\rho(G)/2 \rfloor$, there exists a $\chi_\rho(G)$-colouring $c : V(G) \to \{1, \cdots, k\}$ such that $c_m \geq c_n$ for all $n \geq 2m$.*

Note that Proposition 8 above implies that for any graph that is χ_ρ-packable, $c_m \geq c_{2m}$ and $c_m \geq c_{2m+1}$ and $c_m \geq c_{2m+2}$ etc. In particular, for any graph G, there exists an optimal colouring in which vertices of colour 1 are the most frequent.

Recall the illustrations of the trees F_1, F_2 and F_3 in Figure 1. Observe that for F_1 and F_3, $c_1 > c_2 > c_3$ and for F_2, $c_1 > c_2 \geq c_3$. Hence, we conclude that F_i's are uniquely 3-χ_ρ-packable trees with monotone optimal colouring.

Clearly, by iteratively applying any of the operations $\mathcal{O}_i$ defined in 2.1 to our F_i's, we have by Lemma 2 that the resulting trees are uniquely 3-χ_ρ-packable.

We show in the next section that applying some of the operations $\mathcal{O}_i$ to the F_i's, we obtain uniquely 3-χ_ρ-packable trees, say $T_{\ell,k}$ and T_k, with monotone and non-monotone colouring respectively.

We begin by labeling the vertices of F_i's, as illustrated in Figure 3.

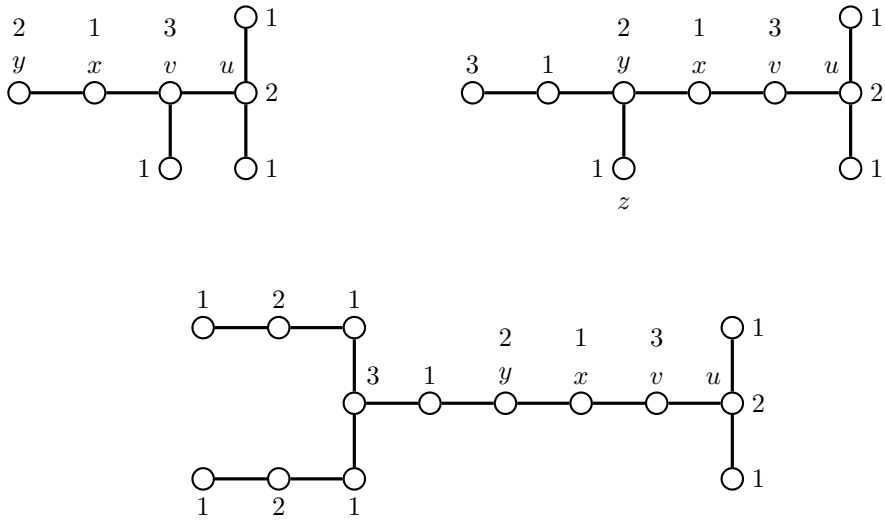

Figure 3: The trees F_1, F_2 and F_3 from which all uniquely 3-χ_ρ-packable trees are constructed.

3.1. Classes of uniquely 3-χ_ρ-packable trees with monotone and non monotone colouring. We define a τ-path to be a path of length τ. Let T_k, $k \geq 2$, be a class of trees that consists of a 3-path on consecutive vertices u, v, x, y, each of u and v having two leaves, and there are k paths of length 2 that emerge from y. The tree T_k was first described in [5].

Figure 4 depicts the family of trees T_k from which a set of uniquely 3-χ_ρ-packable trees with non-monotone colouring is constructed.

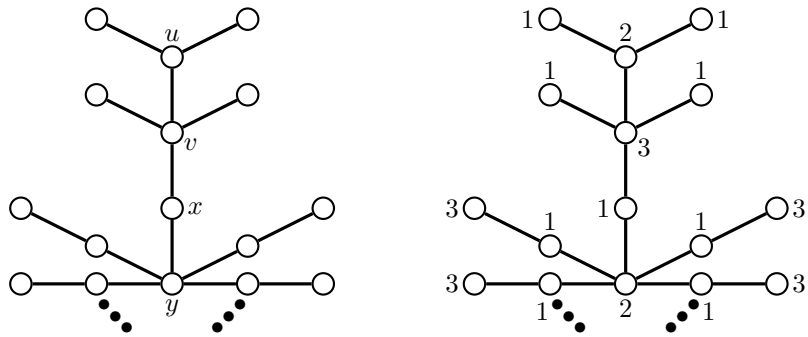

Figure 4: The tree T_k from which a set of uniquely 3-χ_ρ-packable trees with non-monotone colouring is constructed.

Clearly, T_k is obtained from F_1 by applying the operations $\mathcal{O}_i$'s for $i \in \{1, 2, 4\}$ to the vertices. In particular, T_k is obtained from F_1 by applying $\mathcal{O}_2$ to v once, applying $\mathcal{O}_1$ to y, k-times, and finally applying $\mathcal{O}_4$ to the k vertices adjacent to y respectively.

Similarly, T_k is obtained from F_2 by applying the operations $\mathcal{O}_i$'s for $i \in \{1, 2, 4\}$ to vertices v and y in a manner described below. Apply $\mathcal{O}_2$ to v twice, $\mathcal{O}_1$ to y, t-times such that $t = k - 2$, and finally applying $\mathcal{O}_4$ to z and the newly added t vertices adjacent to y respectively.

By applying similar operation to F_3, we obtain another tree, say F_3', such that $T_k \subseteq F_3'$. In particular, F_3' is obtained by applying $\mathcal{O}_2$ to to v twice, applying $\mathcal{O}_1$ to y, t'-times such that $t' = k - 1 \geq 3$, and finally applying $\mathcal{O}_4$ to the newly added t' vertices adjacent to y respectively. Since both T_k and F_3' were obtained from F_i's by applying the operations $\mathcal{O}_1$, $\mathcal{O}_2$ and $\mathcal{O}_4$, then by Lemma 2.1, we have that F_3' is a uniquely 3-χ_ρ-packable trees but with no monotone colouring.

The following shows that we can obtain a 3-χ_ρ-packable tree with monotone colouring from T_k by extending the definitions and applying some of the operations $\mathcal{O}_i$ to some vertices of T_k.

For $\ell, k \geq 2$, define $T_{\ell,k}$ to be a class of trees that consists of a 3-path on consecutive vertices u, v, x, y, with vertex u having two leaves, and there are ℓ paths and k paths of length 2 emerging from v and y respectively. Figure 5, shows the family of trees $T_{\ell,k}$ from which a set of uniquely 3-χ_ρ-packable trees with monotone colouring is constructed.

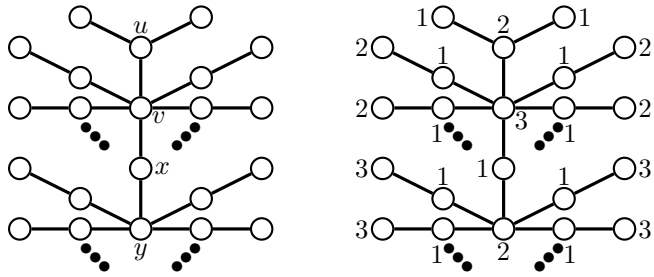

Figure 5: The tree $T_{\ell,k}$ from which a set of uniquely 3-χ_ρ-packable trees with monotone colouring is constructed.

Clearly, the tree $T_{\ell,k}$ is an extension of T_k, which is obtained by applying some of the operations $\mathcal{O}_i$'s in a manner described below. Apply $\mathcal{O}_2$ to v, t-times such that $t = \ell - 2 \geq k - 3$, $\mathcal{O}_3$ to all v' in $N[v] - \{u, x\}$.

Since T_k is a uniquely 3-χ_ρ-packable tree and $T_{\ell,k}$ is obtained from T_k by applying the operations $\mathcal{O}_i$'s, we have by Lemma 2.1 that $T_{\ell,k}$ is also a uniquely 3-χ_ρ-packable tree. Moreover, since $T_{\ell,k}$ satisfies the conditions of Definition 7, we conclude that $T_{\ell,k}$ is a set of uniquely 3-χ_ρ-packable trees with monotone colouring.

4. Conclusion. In this paper we completely characterised all trees T for which there is only one packing colouring using $\chi_\rho(T) = 3$ colours. We further investigated the monotonicity of the packing colouring and obtained sets of uniquely 3-χ_ρ-packable trees with monotone χ_ρ-colouring and non-monotone χ_ρ-colouring respectively. We now consider the existence of uniquely k-χ_ρ-packable trees for $k > 3$ which pose an open question

4.1. Uniquely k-χ_ρ-packable trees. We now consider the existence of uniquely k-χ_ρ-packable trees for $k > 3$. In Figure 6 we give examples of uniquely k-χ_ρ-packable trees for $k = 3, \ldots, 7$. Here, a circle represents a vertex which has sufficiently many unshown leaf neighbours so as to ensure its degree is at least k, so that the vertex cannot receive colour 1 by Observation 1. Solid vertices have no hidden neighbours. For instance, T_3 represents the graph F_1 of the previous section. We mention that these examples can be adapted to obtain examples of arbitrary diameter.

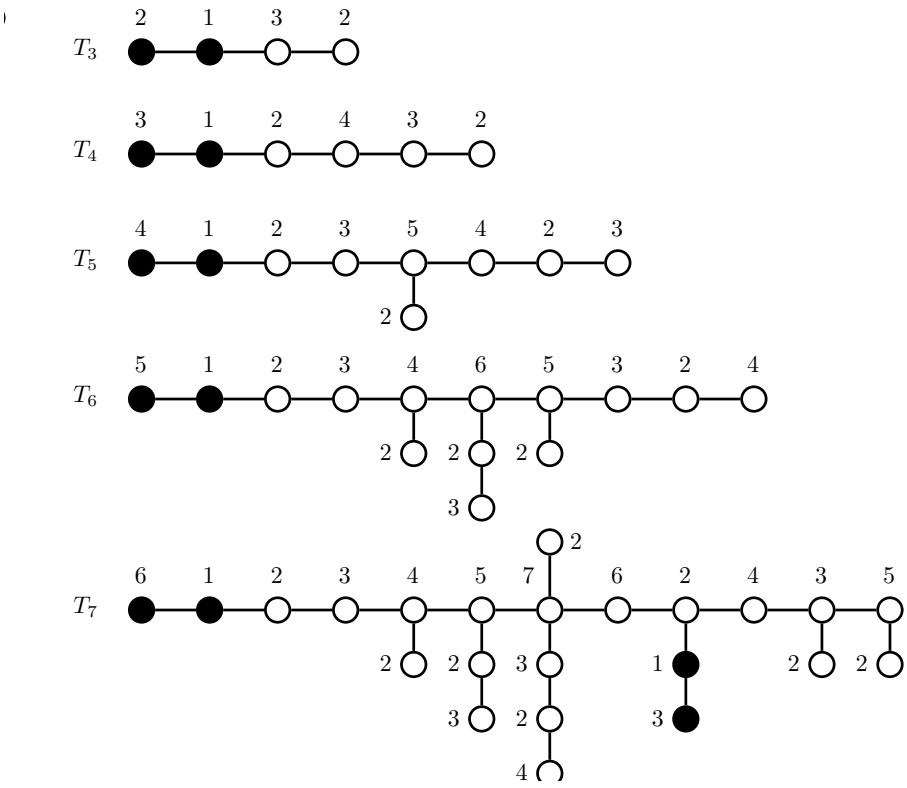

Figure 6: Uniquely k-χ_ρ-packable trees, $k = 3, \ldots, 7$.

These examples were found and verified with the aid of a computer. While a pattern seems to emerge, the approach fails for $k \geq 8$. In fact, we are not sure that examples exist for all k. We will state this as:

Question 1. *Do uniquely k-χ_ρ-packable trees exist for all k?*

Proving uniqueness of the given colourings can be done with a straightforward but tedious case analysis. We give a proof for T_6 to illustrate a useful technique that considerably reduces the amount of work required:

Consider any 6-χ_ρ-packing c of T_6. Let F be the subgraph of T_6 induced by all vertices at distance 2 or less from the 6-vertex. Two copies of F are depicted in Figure 7. There can be at most one 4-vertex, at most one 5-vertex and at most one 6-vertex in F, since F has diameter 4. Consider the sets A_1, A_2, A_3 and B_1, B_2, B_3 indicated in Figure 7. The A_i's form a partition of $V(F)$ and each A_i has diameter at most 2. Therefore there are at most three 2-vertices. The B_i's similarly partition $V(F)$ into sets of diameter at most 3, hence there are at most three 3-vertices.

Since F has nine vertices, it follows that there must be three 2-vertices, one from each A_i, three 3-vertices, one from each B_i, and one vertex of each of the colours 4, 5 and 6. But B_3 has only one element, call it x, so $c(x) = 3$. Since $|A_3 - x| = 1$,

the neighbour of x must have colour 2. Now the vertices of F coloured 4,5 and 6 in Figure 6 must have those colours, in some order.

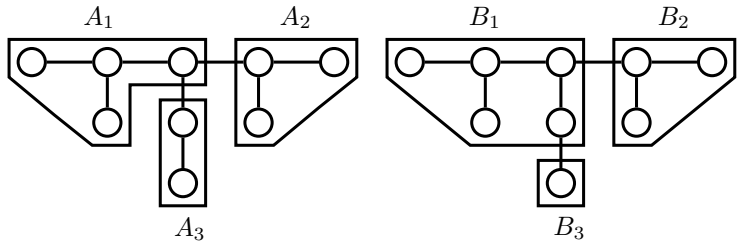

Figure 7: The subgraph F of T_6 used in the uniqueness proof.

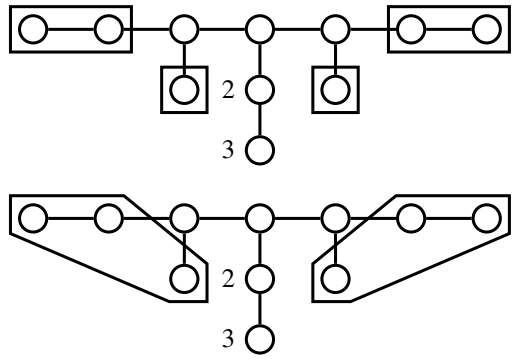

Figure 8: The subgraph F' of T_6.

Now consider the subgraph F' of T_6 induced by all vertices at distance 3 or less from the 6-vertex, and consider the subsets indicated in Figure 8. Each of the four sets at the top must contain a 2-vertex, and each of the two sets at the bottom must contain a 3-vertex. From this the positions of these vertices follow easily.

Considering all of T_6 it follows that there must be two 4-vertices and two 5-vertices, and there is only one way to place these and complete the colouring.

Acknowledgements. Financial support by the DSI-NRF Centre of Excellence in Mathematical and Statistical Sciences (CoE-MaSS), South Africa is gratefully acknowledged.

References

1. J. Balogh, A. Kostochka, and X. Liu, Packing chromatic number of cubic graphs, *Discrete Math.* **341** (2018), 474–483.

2. ———, Packing chromatic number of subdivisions of cubic graphs, *Graphs Combin.* **35** (2019), 513–537.

3. B. Brešar and J. Ferme, An infinite family of subcubic graphs with unbounded packing chromatic number, *Discrete Math.* **341** (2018), 2337–2342.

4. B. Brešar, J. Ferme, S. Klavžar, and D.F. Rall, A survey on packing colorings, *Discussiones Mathematicae Graph Theory* **40** (2020), 923–970.

5. B. Brešar, S. Klavžar, and D.F. Rall, On the packing chromatic number of Cartesian products, hexagonal lattice, and trees, *Discrete Applied Mathematics* **155** (2007), 2303–2311

6. B. Brešar, S. Klavžar, D.F. Rall, and K. Wash, Packing chromatic number, $(1, 1, 2, 2)$-colorings, and characterizing the Petersen graph, *Aequationes Math.* **91** (2017), 169–184.

7. G. Chartrand, L. Lesniak, and P. Zhang, *Graphs & Digraphs,* Fifth Edition, CRC Press, New York, 2011.

8. J. Ekstein, J. Fiala, P. Holub, and B. Lidický, The packing chromatic number of the square lattice is at least 12, arXiv:1003.2291v1, 2010.

9. J. Ekstein, P. Holub, and O. Togni, The packing coloring of distance graphs $D(k, t)$, *Discrete Appl. Math.* **167** (2014), 100–06.

10. J. Fiala and P.A. Golovach, Complexity of the packing coloring problem for trees, *Discrete Applied Mathematics* **158** (2010), 771–778.

11. J. Fiala, S. Klavžar, and B. Lidický, The packing chromatic number of infinite product graphs, *European Journal of Combinatorics* **30** (2009), 1101–113.

12. A.S. Finbow and D.F. Rall, On the packing chromatic number of some lattices, *Discrete Applied Mathematics* **158** (2010), 1224–1228.

13. J. Fresán-Figueroa, D. González-Moreno, and M. Olsen, On the packing chromatic number of Moore graphs, *Discrete Applied Mathematics* **289** (2021), 185–193.

14. W. Goddard, J.M. Harris, S.M. Hedetniemi, S.T. Hedetniemi, and D.F. Rall, Broadcast chromatic numbers of graphs, *Ars Combinatoria* **86** (2008), 33–49.

15. P. Holub and R. Soukal, A note on packing chromatic number of the square lattice, *Electronic Journal of Combinatorics*, **17** (2010), Article Number N17, https://doi.org/10.37236/466

16. Z. Shao and A. Vesel, Modeling the packing coloring problem of graphs, *Applied Mathematical Modelling* **39**(13) (2015), 3588–3599.

17. C. Sloper, *Broadcast-coloring in trees,* TR 233, University of Bergen, Bergen, 2002.

18. B. Subercaseaux and M.J. Heule, The packing chromatic number of the infinite square grid is 15, arXiv:2301.09757, 2023.

19. O. Togni, On packing colorings of distance graphs, *Discrete Appl. Math.* **167** (2014), 280–289.

Received 6 May, 2023 and in revised form 14 December, 2023.