

https://dspace.org/

The extension of digital acoustics measuring techniques to higher frequencies

Ryan, Kevin John

1981
http://hdl.handle.net/10539/18827

Downloaded from a DSpace repository. https://dspace.org/

THE EXTENSION OF DIGITAL ACOUSTICS MEASURING TECHNIQUES TO HIGHER FREQUENCIES

Kevin John Ryan

A Dissertation Submitted to the Faculty of Engineering
University of the Witwatersrand, Johannesburg
for the Degree of Master of Science in Engineering

U322

Johannesburg 1981

Acknowledgement

This work was supported by research grants awarded by the South African Council for Scientific and Industrial Research.

SUMMARY

The majority of acoustic measurement criteria are derived from the integral of the squared sound pressure. This work shows the development of an instrument capable of measuring any of the Integral Square (IS) criteria in acoustic scale models of rooms using an impulse sound source.

The variety of measurements is made possible through the use of a computer-based instrument. The microphone signal is filtered and then digitised. All further signal processing is done digitally in the computer. The results are either displayed numerically or plotted directly on an X-Y plotter.

The instrument uses logarithmic quantisation of the signal and an algorithm developed by Hanrahan (103-105) which greatly simplifies the IS calculations to a process of table look-up and summation.

The decay curves are calculated using Schroëders Method (27).

This study shows the design and testing of the logarithmic converter having 54dB dynamic range and 3dB quantising intervals and interfaced to a NOVA 1200 minicomputer. The software to calculate RT, EDT and IRT was developed and tested on a 1/8th scale model of a reverberation room with known characteristics.

Table of Contents Page Nos.

1. ACOUSTIC MODELLING OF ROOM ACOUSTICS 1

1.1 Background and Statement of Problem 1

1.2 Introduction to Acoustic Modelling 1

1.2.1 Basic Principles 1

1.2.2 Modelling in Practice 3

1.3 Review of Acoustic Modelling for Room Acoustics 4

1.4 Acoustic Criteria in Room Acoustics 8

1.4.1 Reverberation type measurements 9

1.4.2 Early Energy measurements 10

1.4.3 Spatial Measurements 11

1.4.4 Integrated Impulse measurements 12

1.5 Reverberation Time measurement by Schroëders Technique 12

1.6 The use of Digital Signal Processing Techniques 14

1.7 Instrumentation Requirements in Acoustic Modelling of rooms 15

2. TECHNIQUES FOR INTEGRAL SQUARE (IS) MEASUREMENT 17

2.1 Specifications of a typical signal 17

2.2 Methods of Calculating IS 17

2.2.1 Analogue Squaring and integrating 17

2.2.2 Analogue squaring A/D conversion and numeric integration 19

2.2.3 A/D conversion followed by digital squaring and integrating 19

2.2.4 A/D conversion and statistical averaging 20

2.3 Statistical Averages as Time Averages 20

2.4 Statistical Averaging of Logarithmic Quantised Signals 22

2.4.1 Logarithmic quantisation 22

2.4.2 Integration of log quantised signals 24

2.4.3 Tangent formula integration with log. spaced abscissas 25

2.5 Algorithm for Tangent Formula Integration 26

2.6 Conclusions 29

3. MEASUREMENT SYSTEM OVERVIEW 31

3.1 Acoustics Measuring Equipment 31

3.2 Computer System 32

3.2.1 Hardware 32

3.2.2 Software 34

3.2.3 Interfacing to NOVA computers 35

Table of Contents (continued) Page Nos.

3. MEASUREMENT SYSTEM OVERVIEW (continued) 31

3.3 Reverberation Room model and Sound Source 36

3.4 Conclusions 36

4. DESIGN OF A HIGH SPEED LOG A/D CONVERTER (LAD) 40

4.1 Design Specifications of LAD for modelling work 40

4.1.1 Specifications 40

4.1.2 Sampling Errors 40

4.1.3 Sampling Rate 43

4.1.4 Number of Quantising Thresholds 43

4.2 Converter Design 44

4.2.1 Conversion Principle 44

4.2.2 Choice of Comparator 47

4.2.3 Voltage Reference Ladder 49

4.2.4 Circuit Layout 51

4.2.5 Interface Design 51

4.3 Calibration and Testing 53

5. EXPERIMENTAL WORK 56

5.1 Description 56

5.2 The model 56

5.3 The Sound Source 58

5.4 Microphone and Amplifiers 58

5.5 Air Absorption 60

5.6 Description of Software 61

5.6.1 LADEXER Program 62

5.6.2 Map of Core 62

5.6.3 Prime Interface and exits to DDOS 63

5.6.4 Open data file and restore pointer 64

5.6.5 Calculate Integral Square of Data 64

5.6.6 Print 65

5.6.7 Plot 65

5.6.8 EDT and IRT Estimates 65

5.6.9 Least Squares Estimates 66

5.7 Experimental Results 66

5.8 Absorption Coefficient Measurement 66

Table of Contents (continued) Page Nos.

6. DISCUSSION OF RESULTS 69

6.1 Performance of LAD 69

6.2 Decay Curves 69

6.3 Reverberation Time measurements 70

6.4 Absorption Coefficient Measurements 70

7. CONCLUSIONS AND SUGGESTIONS 72

7.1 Conclusions 72

7.2 Suggestions for Further Work 72

Bibliography 74

Appendices

1. Reverberation Decay plots of 1/8th scale reverberation room model A1

2. C5BASIC Call Package A10

3. Program Listings A17

4. Circuit Diagrams A36

5. Design of Sound Source A43

1. ACOUSTIC MODELLING OF ROOM ACOUSTICS

1.1 Background and Statement of Problem

A technique developed by Hanrahan (103-105) enables a variety of acoustic measurements based on the integral of the squared sound pressure to be made with the same computer-based instrument. This instrument has been used at frequencies up to 20kHz in full size room studies. With a modern trend in acoustic design being the use of scale models it was felt that this technique could be extended to provide a very useful instrument for acoustic measurements of scale models of rooms. This study sets out to analyse the need for such an instrument, then from this a specification is drawn up. The later chapters present the design and testing of this instrument.

In order to provide the specifications for an instrument system for scale model work, the theory of acoustic scale models is introducted. A review of current work in the scale modelling field is then presented with the emphasis on the techniques employed and the measurement criteria used.

Section 1.4 analyses the various criteria currently in use and finds a large portion which are based on the integral of the squared sound pressure.

The following section reviews a new method for measuring the reverberation decay due to Schroëder (24).

The chapter concludes with the requirements of an instrument which would be capable of making a variety of measurements on acoustic scale models of rooms. This was then used as a basis for the design of a suitable computer-based instrument.

1.2 Introduction to Acoustic Modelling

1.2.1 Basic Principles

Acoustic modelling is a technique used to study or predict the behaviour of a full size room by examining the acoustics of a scaled down version of the same room. The technique is often used as a design tool in the process of designing auditoria as it enables the designer to get a fairly accurate assessment of the acoustics of the auditorium before it is built. The acoustic model can also often serve as an architect's model. Modelling can also be used to study the effects of various modifications to a room in order to choose the best, before building work commences.

The modelling process consists of scaling down the linear dimension of the model by a scale factor k say (k 1) producing a 1/k model. Using dashed quantities and undashed quantities for the full size room gives

$$l = kl' \qquad - (1.2.1)$$

where l is the linear dimension of the full sized room
and l' is the linear dimension of the model.

In order to preserve the wave acoustic behaviour of the model the wavelength must be scaled similarly giving

$$\lambda = k\lambda' \qquad - (1.2.2)$$

Since the speed of sound in air is constant i.e. c = c' the frequencies will also be scaled

$$\gamma = \frac{1}{k}\gamma' \qquad - (1.2.3)$$

Also all times will be shorter by a factor k (delay times, reverberation times etc) giving

$$t = kt' \qquad - (1.2.4)$$

The decay of sound in a room can be shown to obey the following equation (47)

$$E(t) = E_o \exp\left[- mc + n\log_e (1 - \alpha)\right] t \qquad - (1.2.5)$$

where m = attenuation constant of air
n = average no. of wall reflections per second

E(t) is the sound energy in the room.

E_o is the initial energy at the time t = o when the sound is switched off.

α is the average absorption coefficient of the surfaces in the room.

Scaling the decay process therefore yields

$$\exp\left[- mc + n \log_e (1 - \alpha)\right]t = \exp\left[- m'c' + n'\log_e (1 - \alpha')\right]t' \qquad - (1.2.6)$$

From the above relations and since n = (1/k)n', the frequency dependence of the absorptions can only be preserved if

$$\alpha = \alpha' \qquad - (1.2.7)$$

and

$$m = \frac{1}{k} m' \qquad - (1.2.8)$$

The required relationship (or forced as the case may be) between the full size room and the scale model is summarised in the table below.

Quantity	Unit	Relationship
Length	m	$l = kl'$
Wavelength	m	$\lambda = k\lambda'$
Frequency	s	$\nu = (1/k)\nu'$
Speed of sound	ms	$c = c'$
Time	s	$t = kt'$
Surface absorption	m	$\alpha = \alpha'$
Air absorption	m	$m = (1/k)m'$

Table 1.1 Relationship of physical quantities required in a 1/k scale acoustic model in air with dashed quantities being those of the scale model

1.2.2 Modelling in Practice

In order to conduct modelling tests a model must be built which conforms to the rules laid down in Table 1.1. Scaling the dimensions of the room present little problem. In general wood can be used to model the walls of the room. Since the model is normally not used for sound transmission tests it is only necessary to model the sound reflection properties so the surface of the wood can be treated with a substance which has the same absorption coefficient at the scaled frequency as the full size equivalent at normal frequencies. Various substances have been tested and tables of values have been drawn up (4).

Wavelength and frequency scaling is essentially the same problem and affects almost the whole measurement chain. Starting at the sound source although some authors have produced adequate sound sources for continuous output, the problem of the directivity of loudspeakers at high frequencies has caused impulsive sound sources to be mostly used. So far nobody has been able to produce a loudspeaker source with enough omnidirectionality to produce good fidelity and small enough to be used in acoustic scale models (4). In this experiment an electrical spark source was used which is small and has an omnidirectional output and a frequency response extending well above 100kHz.

Although the B + K 4138 eighth inch microphone gives a frequency response within 2dB up to 140khz and B + K 4135 quarter inch only up to 100kHz, this is at the expense of a 12dB difference in sensitivity. This means that an extra 12dB is required from the sound source for the same response. In a 10:1 scale model a maximum frequency of 100kHz is acceptable being the equivalent of 10kHz in a full size room. For this reason a 1/4 inch microphone is preferred and was used.

Controlling the surface absorption can be done by choosing various surface treatments for the model which correspond to the real surface but in general the medium that the experiment is conducted in is air and the absorption of air at scaled frequencies is greater than it should be for modelling. The absorption of sound increases with the square of the frequency making the effect much more pronounced at higher frequencies.

The increased air absorption is mainly due to water molecules and can be reduced by drying the air. This is a costly and time consuming process and is therefore not often used. Another method is to replace the medium with nitrogen which does not exhibit the same problems as air and a further method which can only be used in objective measurements is to calculate the extra effect of the air absorption and subtract it in the calculations. This method requires that the temperature and relative humidity be measured so that the air absorption can be calculated. This method was used and is discussed in detail in section 5.5.

It can be seen that acoustic modelling using impulsive sound sources is relatively easy to accomplish. A number of different acoustic criteria are in use which are based on IS measurements so that a multi-purpose instrument capable of a variety of measurements from an impulse sound source would be very useful in model work. That is what this work set out to provide. The next section provides a review of the various techniques in use in scale modelling to establish the current trends in this branch of acoustics.

1.3 Review of Acoustic Modelling for Room Acoustics

Modelling techniques in room acoustics have been in use since the beginning of the century. Ripple tank methods and spark photography were used as early as 1913 by Sabine. The first use of a three-dimensional acoustic scale model was by Spandock (1,2) in 1934. In this experiment he used models of three rooms scaled down by a factor of 5 and using frequencies of 2500Hz and 4000Hz corresponding to frequencies of 500 and 800Hz respectively. This work has been extended by Brebuck (3) and Spandock (5) to a scale of 1:10 by using the speeded up tape method. In this method the normal frequency sound is recorded on magnetic tape and then played at ten times normal speed into the model. The sound picked up by the microphone is recorded at the ten times speed and then played back at normal speed for analysis. This method, also used by Harwood and Burd (4) is the only method used when subjective evaluation is required. In this case the excessive air absorption must be minimised and not merely compensated for in the calculations. In order to do so it is necessary to dry the air to

between 1,5 and 3% relative humidity. Harwood and Burd achieved this using synthetic zeolite and enclosing the model in a polythene tent with a refrigerating dehumidifier. The high cost of this method makes it prohibitive to most. In 1974 Ishii & Tachibana (6) reported the use of nitrogen in a scale model to get around the air absorption problem. Nitrogen has a classical air absorption very similar to that of air and a molecular absorption which is nearly zero and does not depend on humidity or temperature. They found that the acceptable limit of remaining air was about 3%, but the limits of acceptability were not stated.

Due to the directivity of loudspeakers at high frequencies the majority of authors have favoured the use of impulsive sound sources, and use criteria such as reverberation time (RT), early decay time (EDT) and steepness in their measurements. In these experiments air absorption is normally compensated for rather than corrected. Hegvold (7) used pistol shots from a starting pistol to develop a 1/8th scale model auditor using a model of a reverberation room. The sound was recorded on a tape recorder and played back in reverse to avoid overshoot on the chart recorder.

A more common sound source is the electric spark gap. This was used as early as 1962 by Lochner & Burger (8,9) in scale model tests of a 1/16 scale model auditorium. An acoustic criterion developed by Lochner & Burger showed good agreement between the model and the auditorium. AI is an index which uses a ratio of early and total energy (discussed in section (1.4). Watters (20) describes in detail a suitable spark source for use in models.

Two general studies of room acoustics are interesting because they illustrate the use of scale models in general research (as opposed to design). Nelson and Koopman (14) used models to study the effect of v-form ceilings in office landscaping. Making changes in the model considerably easier than the same changes in the full size case. Gerlach (15) used a model to study the reverberation process as a Markoff chain. He wished to study a room with dimensions 1:2:4 and used a model because the appropriate proportioned room was not available. The model was excited with an electric spark source and the results recorded on a tape recorder at 60 inches per second. The tape was played back at a sixteenth of the speed and analysed digitally using a computer and Schroeder's method (see section 1.5). A decay signal to noise ratio of 35dB was obtained. The model was flushed with nitrogen to lessen air absorption.

Model studies relating to the design of auditoria have in recent times given rise to a number of new criteria relating to the energy decay. These

will be introduced here prior to a review of the use by various authors:

i) Initial Reverberation Time (IRT). This was used by Atal, Schroëder, and Sessler (26) in a study of the subjective assessment of sound decay. The initial criterion used was expressed as the slope of the reverberation curve over the first 160 milliseconds of the decay. This criterion T_{160} gave a good subjective correlation between simulated exponential and non-exponential decays. In the same study this criterion was found impractical in use in real concert halls and so a criterion T_{15} was used which was based on the first 15dB of the decay process. Thus the T_{160} criterion would be used for non-exponential decays and the T_{15} for exponential or straight-line decays.

ii) The IRT criterion was modified by Jordan to the slope over the first 10dB of the decay process and renamed the Early Decay Time or EDT.

iii) 'Deutlichkeit' proposed by Thiele (29) was defined as the ratio of the energy of the first 50 milliseconds of a sound pulse to the total energy and measured as a percentage figure (see section 1.3.2 for definition).

iv) Steepness was introduced by Jordan and is defined as

$$\sigma_{(-5)} = \left| d/dt \left(10 \log \left[I_{(-5)} / I_0 \right]\right)\right| \qquad - (1.4.1)$$

where I_o is the stationary intensity of a noise pulse and $I_{(-5)}$ is the intensity at a level 5dB below I_o on the rise of the pulse.

This criterion can be correlated with the first 5dB of the decay process as Schroëder (27) has shown the complimentarity of sound build-up and decay.

v) Inversion Index was created by Jordan as the ratio of the average steepness in the stage area to the average steepness in the audience area because it was felt that values of steepness ought to be greater closer to the sound source.

The criteria i) to iv) are illustrated on the diagram figure 1.2.1. Note that for an ideal exponential decay all of the criteria would correlate exactly with each other.

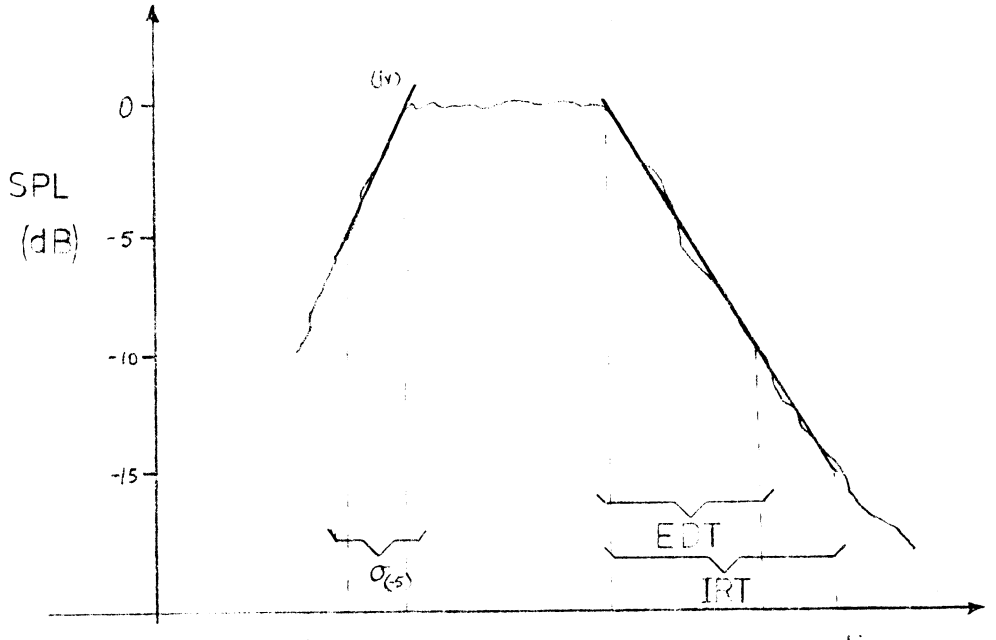

Figure 1.2.1 Portions of decay curve used for EDT, IRT and steepness calculations

The model studies of the Sydney Opera House by Jordan (16) are interesting because two designs were tested and neither, due to the complex surfaces, would have been amenable to analytical determination of the criteria concerned. Jordan used reverberation time, early decay time (EDT) as well as a criterion that he developed called Inversion Index. This criterion is a spatial type measurement which relates the EDT in audience area to that in the stage area of the auditorium (section 1.4). Jordan (17) also tested a model of the Metropolitan Opera House, Lincoln Center, and the results show good agreement with the finished hall. The main criteria used in this test were steepness and EDT and were measured using Schroeder's technique (see section 1.5).

Veneklasen (11) used the results of model tests of acoustically coupled chambers to design the Saratoga Pavilion. He used a model of a reverberation chamber with a division and an opening connecting the two chambers simulating the stage with stage volume and auditorium volume. Thus the effect of the coupling of the two volumes on the reverberation time could be measured with relative ease by varying the coupling opening and the relative volumes. The finished hall, also designed using a 1/48 model and a spark source, has a reverberation time between 1,7 seconds and 2,5 seconds as the coupling between stage and audience is varied.

Jordan (17), in a study of various acoustic criteria in use in model studies and in a later study on recent developments in auditorium acoustics (19)

comments on the number of various criteria under development. All of these criteria can be derived from the integrated impulse response (integral of squared sound pressure) and so it would be an advantage to be able to determine any of these related criteria in model studies and even to do comparative studies. This can be done if the integral is evaluated in a computer and stored, the main advantage being the ease with which different criteria can be studied and new criteria can be accommodated. It should be noted that as the subjective correlation of the various objective criteria is understood these criteria become increasingly used in preference to subjective measurements.

A few conclusions can be drawn from this review:

1) Model studies are used in two main areas of room acoustics:
   a) the study of the variation of room geometry;
   b) the design of auditoria.
2) Most experimenters use scale models with scale factors of the order of 1:10 and use an electric spark impulse sound source as excitation and record the response on a high speed tape which is replayed at normal speed for analysis.
3) Air absorption is important and must be corrected by drying the air or using a nitrogen atmosphere. Alternately air absorption may be calculated and compensated for in the calculations.
4) A large number of criteria are currently in use and flexibility in measuring these is desirable, particularly since new criteria are being developed and standards have not been set for their measurement.

1.4 Acoustic Criteria in Room Acoustics

As pointed out previously the design of modern auditoria is complex and so modelling is frequently used. In addition, it has been found that reverberation time is not a sufficient enough criterion to be used on its own and so various other criteria have been and still are being developed.

A great deal of effort is still also being put into the development of a single criterion by which room acoustics may be evaluated. However it is becoming increasingly clear that a number of criteria will always be required. Some authors have speculated that the number of independent dimensions is at least four. However the situation is in a state of flux and the present day designer should be capable of doing any of a number of measurements in the model. Using digital methods and a computer gives the designer this flexibility to evaluate a variety of criteria - even with a

single measurement and the ability to evaluate new criteria as they are developed.

A description follows of a number of criteria currently in use. As a number of criteria are similar and even related - they can be grouped into three categories

a) Reverberation type measurements - measurements which relate to the decay curve directly.
b) Energy measurements - criteria which relate early energy to late or total energy including articulation criteria.
c) Spatial measurements - criteria which relate to the directionality of the sound.

1.4.1 Reverberation type measurements

Reverberation time remains the single most-used criterion in architectural acoustics. By using the method developed by Schroëder (24) it is possible to obtain a more accurate idea of the decay curve because an ensemble average of decay curves are obtained in a single measurement. As a result of having a more accurate decay curve it was possible to do comparisons between subjective reverberation effects and the early part of the decay and it was found the subjectively the early part of the decay is more important and this led to the definition of two related criteria:

i) IRT (Initial Reverberation Time) as defined by Atal, Schroëder and Sessler (26) is the reverberation time corresponding to either the first 160ms or the first 15dB of the decay for non-exponential and exponential decay respectively.
ii) EDT (Early Decay Time) is defined as the RT corresponding to the first 10dB of the decay.

Of these EDT has the edge in popularity, although both have been frequently used in recent years.

A further quantity in this category is steepness. Steepness is defined as the rate of rise of the intensity of a sound pulse over the last 5dB of this rise. Schroëder (27) has showed that sound build-up and decay are complimentary so that steepness is closely related to EDT and IRT. Steepness is measured in decibels per millisecond.

1.4.2 Early Energy Measurements

The second class of measurements derive from the work done by Haas (28) and consider the ratio of energy arriving before a certain time to the remaining or total energy. All these criteria have as their basis the principle that the direct sound and early reflections are beneficial (signal) and the later reflections are detrimental (noise) to the hearing process.

Thiele (29) first proposed 'Deutlichkeit' or Definition as the ratio of energy arriving in the first fifty milliseconds to the total energy, expressed as a percentage. Thus definition can be expressed as

$$\text{definition } D = \frac{\int_0^{t = 50ms} g(t)^2 \, dt}{\int_0^{\infty} g(t)^2 \, dt} \times 100\% \qquad - (1.4.2)$$

Other authors such as Niese (30) and Lochner & Burger (32,32) have used a linear transition from beneficial to detrimental sound by defining a weighting function a(t) to the integral, where a(t) is defined as

$$a(t) = \begin{cases} 1 & 0 \leq t < t_1 \\ \dfrac{t_2 - t}{t_2 - t_1} & t_1 \leq t \leq t_2 \\ 0 & t > t_2 \end{cases} \qquad - (1.4.3)$$

Graphically illustrated below

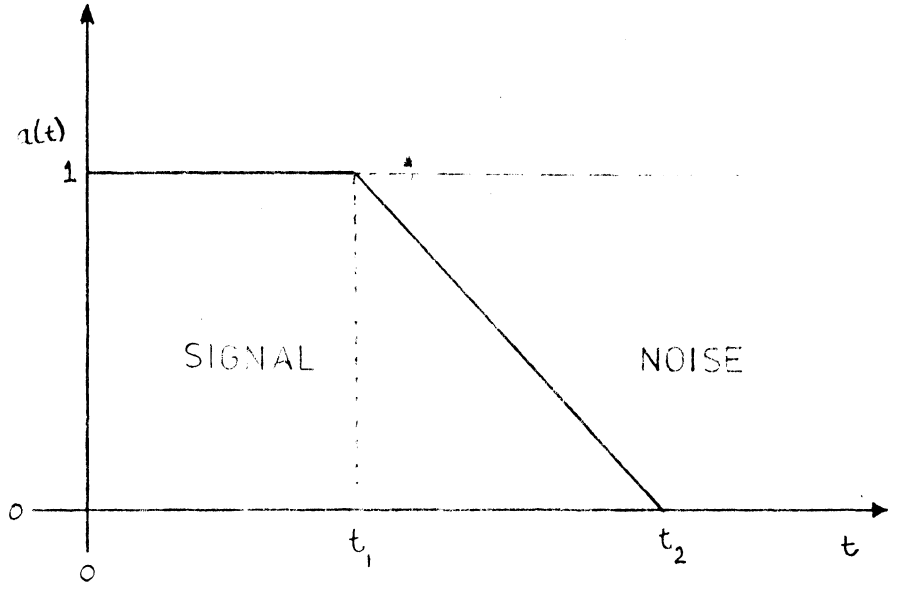

Figure 1.4.1 Weighting function for S/N criterion

Lochner & Burger used values of t_1 = 35ms and t_2 = 90 milliseconds in their work. This led to a 'signal to noise' criterion being defined as

$$\Delta L = 10 \log_{10} \left(\frac{S}{N} \right) \qquad - (1.4.4)$$

where $S = \int_0^{\infty} a(t)g(t)^2 \, dt$

and $N = \int_0^{\infty} 1 \cdot g(t)^2 \, dt$

In practice the upper limit of the S integral is of course t_2 since it is zero for $t > t_2$. This signal to noise ratio has also successfully been used as a percentage to indicate intelligibility to Lochner & Burger.

Beranek and Schultz (33) later used a similar measure in reciprocal form defined as

$$10 \log_{10} \left[\frac{\int_{50ms}^{\infty} g(t)^2 \, dt}{\int_0^{50ms} g(t)^2 \, dt} \right] \qquad - (1.4.5)$$

The main difference in this criterion is that the signal energy (energy arriving less than 50ms after direct sound) is not included in the total noise energy and that the ratio is inverted.

Recent work on a single figure criterion by Reichards (34) has focussed on this class of measurement and he puts the cut-off between early and reverberant energy at around 85 milliseconds.

As work in this field progresses one of the above or a similar criterion should come to the fore and become generally used. Until then it would be convenient to be able to measure the ratio of early to reverberant energy with an arbitrary and variable weighting function or cut-off value. For this purpose formulae (1.3.3 and 1.3.4) provide this facility with a sharp cut-off where $t_1 = t_2$. If the measurements of the integral square are made with short time slices and stored in a computer then any or all of the above criteria can be calculated from a single measurement.

1.4.3 Spatial Measurements

These criteria are all related to the variation in measurements from stage to audience area or to the direction from which reflections are received by the listener.

Jordan has used a criterion called Inversion Index. This is the ratio between the average value on stage to the average value in the audience area of measurements of EDT, IRT or definition D. An auditorium with good inversion has a value of inversion index greater than unity. This implies that players require early reflections to a greater extent than the audience and is the reason for diffuser panels above the stage area in some recent designs.

Recent work has emphasized the importance of lateral reflections, notably those of West (35) and Marshall (35 - 38), Keets (39) and Barron (40). The work on lateral reflections is beyond the scope of this work but was included for completeness.

1.4.4 Integrated Impulse Measurements

All of the measurements mentioned in 1.3.1 and 1.3.2 and inversion index are possible using the integral of the squared sound pressure response (filtered with octave or third octave filters) of the room to an impulse. In order to be able to do all the previous measurements the value of the integral should be known at sufficient points on the time axis e.g. in 5 or 10 millisecond intervals. This and all subsequent calculations of ratios and logarithms are conveniently done by software if the integral is evaluated in a digital computer and there is the additional benefit of the speed with which the calculations can be performed.

1.5 Reverberation Time Measurement by Schroëders Method

The accuracy of decay curves obtained by the method of excitation using white noise is limited by the random fluctuations in the excitation signal. In order to overcome this difficulty it is necessary to take the average of a number of decay curves for the same source and microphone positions. This is both time consuming and inefficient and also the resulting curve does not show the first part of the decay in detail.

A method has now been developed by Schroëder (24) which enables the ensemble average of a number of decay curves to be obtained in a single measurement using the integral square of the impulse response.

Since reverberation time is still the main criteria for measurement the theory of Schroëders method is reproduced below from his paper (24).

The theory relies on a statistical identity for stationary white noise:

Let n(t) be stationary white noise. This implies that its autocovariance function is zero everywhere except for $t_1 = t_2$.

Therefore $$\langle n(t_1) \cdot n(t_2) \rangle = N \cdot \delta(t_2 - t_1) \qquad - (1.5.1)$$

where $\langle\rangle$ denotes the ensemble average

N is the noise power per unit bandwidth

$\delta(t_2 - t_1)$ is the Dirac delta function

when the noise in a room has built up to a steady state then the signal received at the microphone is

$$s(t) = \int_{-\infty}^{+\infty} n(\tau)\, r\,(t - \tau)\, d\tau \qquad - (1.5.2)$$

where r(t) is the combined impulse response of the entire system including amplifiers, filters, transducers etc. If the sound source is switched off at t = 0, then r(t) is zero for all t>0 and the response is

$$s(t) = \int_{-\infty}^{0} n(\tau).r(t-\tau)\,d\tau \qquad - (1.5.3)$$

where $-\infty$ is long enough ago for the room to have reached steady state. Squaring and taking the ensemble average yields from 1.5.1

$$\langle s^2(t)\rangle = \int_{-\infty}^{0} d\tau \int_{-\infty}^{0} N\delta(\theta-\tau)\, r(t-\tau)\, r(t-\theta)\, d\theta \qquad - (1.5.4)$$

Since $\delta(\theta-\tau)$ is zero for all values except $\theta = \tau$ and the integral of the delta function is unity the second integral can be simplified giving

$$\langle s^2(t)\rangle = N\int_{-\infty}^{0} r^2(t-\tau)\,d\tau \qquad - (1.5.5)$$

changing the variable by substituting $x = t - \tau$ yields limits of

$$\tau = 0 \qquad x = t$$

$$\tau = -\infty \qquad x = \infty$$

and the integral becomes

$$\langle s^2(t)\rangle = N\int_{t}^{\infty} r^2(x)dx \qquad - (1.5.6)$$

Therefore the ensemble average of the decays can be obtained by the integration of the squared impulse response. Note that the above equation cannot be evaluated at time t without a knowledge of the response at time $t = \infty$. It is therefore impossible to evaluate the decay curve in real time using Schroëders method, and some method of storage is required to evaluate the integral.

This problem can be overcome fairly easily and three methods are given below and illustrated in Fig. 1.5.1.

1) The impulse response is filtered and recorded on magnetic tape. The tape is then played back in reverse and then squared and integrated and the result plotted on a level recorder. Playing the tape in reverse effectively reverses time and enables calculation of the integral from ∞ to t, ∞ being a time long enough for the sound to have decayed to ambient noise level.

2) The second method by Kuttruf and Jusofie (25) evaluates the integral by splitting the integral into two parts as follows

$$\langle s^2(t)\rangle = N\left\{\int_{o}^{\infty} r^2(x)dx - \int_{o}^{t} r^2(x)dx\right\} \qquad - (1.5.7)$$

The first integral from 0 to ∞ is evaluated with the switch in position 1. The second part of the integral is evaluated and subtracted with the switch in position 2. This method does not require the use of a tape recorder but does require two impulse measurements to complete the calculations. This method also assumes that the two impulses are identical and therefore a highly stable impulse source is required.

3) The third method was the one used in this study. The impulse is filtered and sampled using an analogue-to-digital converter. Then either short time slices of the integral or the samples themselves are stored in the memory for later integration by the computer. Once the data is stored a variety of measurements may be made using the same data.

1.6 The Use of Digital Signal Processing Techniques

The great reduction in the price of digital electronics has led to more and more signal processing being done in digital form. Once the signal has been digitised its accuracy and dynamic range cannot be degraded by noise, reducing the restrictions of using careful layout techniques and shielding to the small analogue section of the process. If the digitised signal is fed to a computer a great variety of calculations are possible.

In the acoustics field the signals encountered generally have the following properties

1) wide dynamic range
2) Gaussian or similar amplitude distribution
3) moderately wide bandwidth (especially in modelling work).

With the wide dynamic range of the signal and when it is of a Gaussian nature the logarithm of the value or a ratio is often used to compact the scale. This can be carried over to the digital field using A/D converters with logarithmically spaced quantisation levels. In a similar vein to the analogue case this leads to a simplification of the processing without a loss of resolution. In particular, logarithmic quantisation reduces the number of bits required enabling a larger number of samples to be stored in the same memory area.

In acoustic modelling work the signal usually occupies 4 - 5 octaves and is analysed in octave or third octave bands. The wide bandwidth coupled with the wide dynamic range makes analogue signal processing difficult particularly with respect to noise and stability. Using digital techniques these problems are only of any significance early on in the signal processing chain, prior to and during the digitising process.

Reducing the number of quantisation steps and using logarithmic quantisation enables a large reduction in the complexity of the squaring and integrating algorithms enabling them to be reduced to a simple table look-up followed by addition which can in some cases be done in real time. The algorithms are discussed in the following chapter.

1.7 Instrumentation Required in Acoustic Modelling of Rooms

From the discussion of acoustic criteria, the review of modelling techniques and financial considerations the following specifications for an acoustic modelling system for rooms were drawn up for this study:

1) An impulsive sound source be used together with Schroëders method in order to evaluate the decay curve. Thus no attempt at subjective measurements was made.
2) Models of scale factors of up to 1 in 10 should be accommodated, as the larger models are costly to build and in many ways negate the purpose of modelling. This will be limited by the frequency response of the microphone and the highest frequency under study in the full size room. (The microphone available has a frequency response up to 70kHz giving a maximum frequency of 7kHz in the full sized room for a 1 in 10 model.)
3) As no subjective measurement will be made it will be sufficient to compensate for air absorption (see section 5.5) instead of trying to reduce it.
4) The advantages of the variety of measurements possible strongly suggest the use of a computer based digital system. All the criteria discussed in sections 1.4.1 and 1.4.2 can be easily accomplished as well as the stage criterion of Inversion index.
5) Because of the Gaussian nature of the signal it is possible to reduce the resolution required in the quantiser by using logarithmic quantisation without loss of accuracy and resulting in a smaller word length of the samples. Work by Hanrahan (101 - 105) has shown that by the use of logarithmic quantisation, the calculation of the Integral Square may be reduced to an addition via a table look-up. (This will be discussed in the following section.)
6) The dynamic range obtainable by this instrument should be as high as possible, but at least as good as current analogue methods. In normal acoustic work a dynamic range of about 50dB can be obtained but this is reduced when modelling frequencies are used. The dynamic range obtainable is usually limited by the power output of the sound source and the electrical noise of the microphone preamplifier. This was the case in this study as can be seen in appendix 5.

The following chapter will discuss the background and theory of the digital signal processing technique used after which a full specification

is drawn up for the instrumentation which was designed. This specification is then used in Chapter 4 for the design of a high speed logarithmic A/D converter. This converter was interfaced to the equipment described in Chapter 3. The instrument was then tested on a scale model to confirm its usefulness.

2. TECHNIQUES FOR INTEGRAL SQUARE (IS) MEASUREMENT

2.1 Specifications of a Typical Signal

From the discussion in section 1.6 it is possible to lay down specifications of the signal on which the IS measurement must be made in a room modelling situation.

1) Signal : Band limited noise filtered either into octave or third octave bands.
2) Frequency range : 1kHz - 100 kHz ($\frac{1}{4}$" microphone type B + K 4135)
   1 kHz - 140kHz (1/8" microphone type B + K 4138)
3) Dynamic Range : 50dB (In order that this instrument does not limit the overall measurement chain.)
4) Peak signal level : adjustable up to $\pm$ 10V.

These specifications will be used below to compare various methods for calculating IS. The following methods will be considered:

1) Analogue squaring and integrating.
2) Analogue squaring A/D conversion and numeric integration.
3) A/D conversion, numeric squaring and integrating.
4) A/D conversion, IS as a function of a statistical average.

The first three methods are similar since the only difference is the transition point from analogue to digital processing. The last method differs because the mean square time average is calculated using a statistical average. This is possible because of the equivalence of a statistical average and the mean square integral. Since the mean square value is obtained from the IS value it is possible to use a statistical average to calculate the IS. This will be explained in detail later.

2.2 Methods for Calculating Integral Square (IS)

2.2.1 Analogue Squaring and Integrating

This is the traditional method of IS calculation but becomes increasingly more difficult at higher frequencies. The main problem occurs when trying to square a high frequency signal as it passes through zero. Consider the signal of slope - s at time t. The squared signal must have slope - 2S

before time t and a slope of + 2S after time t with an instant transition. In practice with a sinusoid or band limited noise this value is (from (107))

$$\frac{df(t)}{dt} \Big/ f(t) = 0 \quad \leqslant \pm A\,W_{max}$$

where A = amplitude for sinusoid

A = RMS value for bandlimited noise.

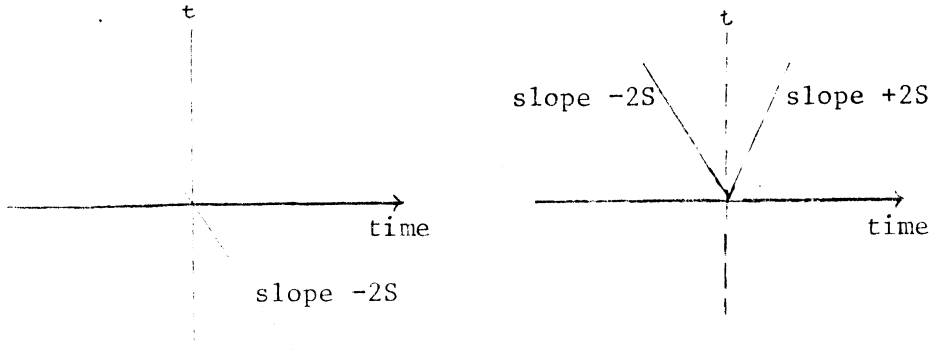

Figure 2.2.1 Change of slope of signal caused by squaring

Since the signal is bandlimited noise a typical value can be obtained. Assuming a ± 10 volt swing is possible for the signal. This is the case with most ic's today. In order to prevent dipping the peak signal must have an amplitude 10 volts. Since the signal is narrow band limited it will resemble a sine wave in many respects and the RMS value should have a similar correspondence with the peak value as does a sinusoid. Therefore the maximum RMS value will be approximately 7,07 V and for a 140kHz signal this becomes

$$\left.\frac{df(t)}{dt}\right|_{f(t)=o} \leqslant \pm Aw_{max}$$

$$\approx 7{,}07 \times 2 \times \pi \times 140 \times 10^{3} \ V/\mu s$$

$$\approx 6{,}2 \ V/\mu s$$

Therefore a squared signal must change slope from -12,4 V/µs to +12,4 V/µs in a very short time. Due to capacitance in the circuit this is not obtainable using conventional ic's, and severe distortion of the signal would result.

A further disadvantage of this method is that analogue integration limits the variety of possible calculations possible to those of RT and EDT.

2.2.2 Analogue Squaring, A/D Conversion and Numeric Integration

This method suffers from the same analogue squaring problems above but will allow for calculation of any of the IS based measurements if all the sampled signals are stored. Since the maximum signal frequency is 140kHz and squaring doubles the highest frequency of the signal, this method is clearly less suitable than the above method.

2.2.3 A/D Conversion Followed by Digital Squaring & Integrating

This method simplifies the hardware required a great deal and allows variety in the type of measurement performed. As with the above method real-time processing is not possible, but the word length required can be reduced slightly since the signal is not squared. The converter would require about 13 bit accuracy though and this would still require 2 bytes of storage per sample. In the computer used about 28k bytes were available for storage giving a maximum event time of 0,05 seconds. This is marginally too short for the expected decay curve.

As mentioned earlier the utilisation of logarithmic quantisation can greatly reduce the amount of storage required so that if the sample could be stored in a single byte an event time of 0,1 seconds at maximum sampling rate could be obtained. This would be sufficient for most model studies, even under reverberant conditions. Note that this condition is most critical at the high frequency end since higher sampling rates are required and although the decay curve becomes steeper it does not do so as fast as the required number of samples increases.

Algorithms for squaring and integration of the signal would be fairly straightforward but would require more than 16 bit integer precision and would therefore be time consuming considering the number of samples taken.

2.2.4 A/D Conversion and Statistical Averaging

In the case of IS and mean square integrals of stationary random signals it is possible to obtain the integral using a statistical average (108). The following identity holds for a stationary random process.

$$\lim_{T\to\infty} \frac{1}{2T}\int_{-T}^{+T} f\{x(t)\}\, dt = \int_{-\infty}^{+\infty} f(X)\, p(X)\, dX = \overline{f}$$

where $p(X)dX = \text{prob}\{X \leq x(t) < X + dX\}$

for mean square integration this reduces to

$$\overline{f^2} = \lim_{T\to\infty} \frac{1}{2T}\int_{-T}^{+T} v(t)^2\, dt = \int_{-\infty}^{+\infty} V^2\, p(V)dV$$

where $p(V)dV = \text{prob}\{V \leq v(t) < V + dV$ is the amplitude probability distribution of V.

This technique of calculating the IS is of particular interest as algorithms have been developed (103 - 105) which greatly simplify the calculation when logarithmic quantisation is used. Therefore this method will allow faster calculation and a larger number of samples and so appears to have the most promise of all the methods examined above. In order to show these advantages this method will be examined in more detail. This examination will start with an introduction to statistical averaging and lead up to the algorithm used in this study.

2.3 Statistical Averages as Time Averages

A general equivalence exists between time averages and statistical averages for a time limited waveform. The time average of the time function x(t) is specified as a statistical average in the following general form (108)

$$\overline{g(x(t))} = \int_{-\infty}^{+\infty} g(X)\, p(X)\, dX \qquad - (2.3.1)$$

where $\overline{g(x(t))}$ is the time average of the function g( ) of x(t)

$p(X)$ is the probability density function of x(t).

Mean square values are obtained for

$$g(X) = x^2 \qquad - (2.3.2)$$

Hanrahan (102,103) has developed the above form into an algorithm suitable for computation. As it forms the basis of the work the derivation is reproduced here.

In this work it is more convenient to define the probability density function in a cumulative form so that the cumulative distribution function P(x) is

$$P(x) = \text{prob}\left\{ x(t) \text{ is more remove from zero than } X \right\}$$

Thus

$$\left.\begin{aligned} P(x) &= \int_{x}^{\infty} p(u)\, du \qquad x \geqslant o_+ \\ &= \int_{-\infty}^{x} p(u)\, du \qquad x \leqslant o_- \end{aligned}\right\} \qquad - (2.3.3)$$

The inverse relation in terms of p(x) is

$$p(X) = - \text{sgn}(X) \frac{dP}{dx}(X) \qquad - (2.3.4)$$

where sgn (X) is the sign of X

i.e. sgn (X) = 1 for $X \geqslant 0_+$

sgn (X) = -1 for $X \leqslant 0_-$

Transferring this to equation (2.3.1) yields

$$\overline{g(x(t))} = \int_{-\infty}^{+\infty} \text{sgn}(X) \frac{dg}{dx}(X)\, P(X)\, dX \qquad - (2.3.5)$$

a necessary condition for this to be valid is that

$$\lim_{x \to \pm\infty} g(X)\, P(X) = 0 \qquad - (2.3.6)$$

which holds in all amplitude limited cases since P(X) becomes zero for values of X beyong the amplitude limits. For the case where $g(x) = x^2$ or the mean square value this becomes

$$\overline{x^2(t)} = \int_{-\infty}^{+\infty} |X|\, P(X)\, dX \qquad - (2.3.7)$$

In the case of an amplitude limited signal with no zero offset this reduces to

$$\overline{x^2} = 2 \int_{o}^{X_L} |X|\, P(X)\, dX \qquad - (2.3.8)$$

This integration can be done numerically using weights hw_i and abscissas X_i so that

$$\overline{x} = 2 \int_{o}^{X_L} |X|\, P(X)\, dX$$

$$= 2h \sum_{i=o}^{N} w_i\, X_i\, P(X_i) \qquad - (2.3.9)$$

Values of $P(X_i)$ can be found by taking a large number of samples and classifying them giving

$$P(X_i) = \frac{C_i}{M} \qquad i = o, \ldots, N \qquad - (2.3.10)$$

where C_i is the number of samples lying outside the range $-V_i$ to V_i

Grouping the constants together in (2.3.9) we select

$$ku_i = 2hw_i X_i \qquad - (2.3.11)$$

and the integral becomes

$$\overline{x}^2 = k \sum_{i=0}^{N} u_i P(X_i) \qquad - (2.3.12)$$

where k is a constant which allows the terms u_i to be represented as integers in a number of useful cases.

It has been shown that the mean square integral can be conveniently expressed as a statistical average. This has been reduced to a simple formula. In the following section the use of logarithmic quantisation will show that this statistical average can be reduced to an even simpler form.

2.4 Statistical Averaging of Log. Quantised Signals

2.4.1 Logarithmic Quantisation

The benfits of logarithmic quantisation were given in the first chapter as leading to a compression of data without loss of relative accuracy. In the previous section the integral square was manipulated into a form in which it could be calculated by a table look-up and summation for each value of abscissa. In the case of linear quantisation this table is too long but becomes feasible when logarithmic quantisation is used. Therefore we will now examine logarithmic quantisation in more detail and its application to IS measurement. In the case of IS the sign of the measurement is not important as only magnitude values are required, therefore the polarity of the signal can be ignored.

Consider a quantiser with upper and lower limits of V and V respectively. The dynamic range is then given as

$$D = 20 \log_{10} \left\{ \frac{X_L}{X_0} \right\} \qquad - (2.4.1)$$

The values of the individual thresholds form a geometric progression and have the general formula

$$X_i = X_0 \; b^{ai} \qquad i = 0, \ldots\ldots, N \qquad - (2.4.2)$$

The values of a & b are shown in the Table 2.4.1 for various quantisation levels.

The interval width Xi+1 - Xi increases from X_0 to X_L but is constant when expressed in the decibel form

$$d = 20 \log_{10} \left(\frac{X_{i+1}}{X_i} \right) = \frac{D}{N} \qquad - (2.4.3)$$

A comparision of logarithmic to linear conversion is shown in the figure below (fig. 2.4.1).

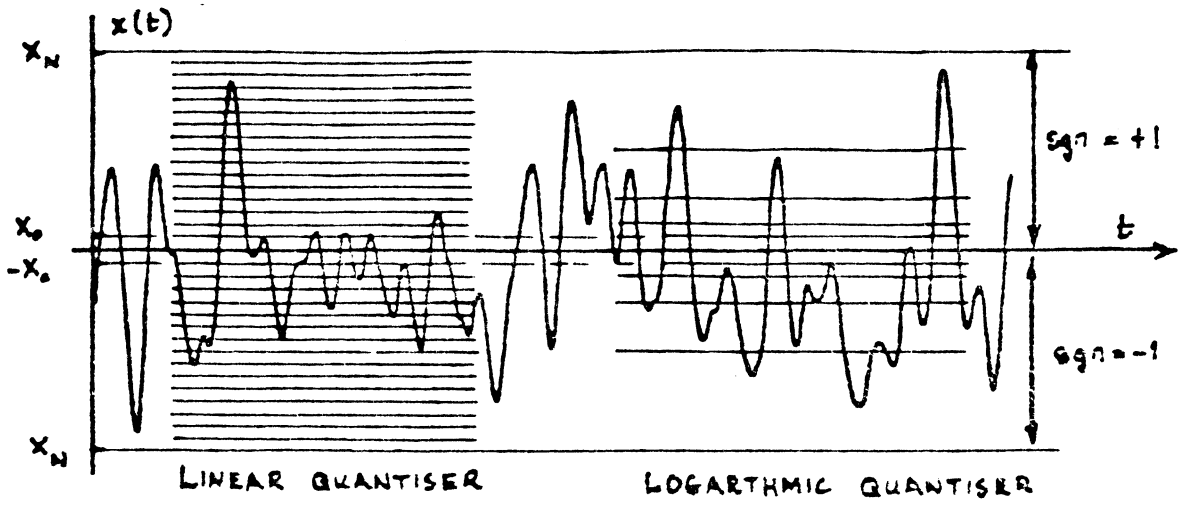

Figure 2 4.1 Example of linear and logarithmic amplitude quantisation

For a gaussian signal the probability density function is an exponential function of x^2. Thus providing a quantiser with exponentially spaced quantisation will give a much more even distribution to the number of samples per quantisation level which should preserve the relative accuracy of the signal.

dB	b	a	$\frac{X^{i+1}}{X^i}$
1	10	0,05	$10^{0,05}$
3,01	2	0,5	$2^{0,5}$
5	10	0,25	$10^{0,25}$
6,02	2	1,0	2^1

Table 2.4.1 Parameters of various logarithmic quantitisers

As can be seen from the above table the 6,02dB quantisation represents powers of two and can be implemented easily using available ic's. A logarithmic converter described by Duke (305) which relies on the exponential decay of a charged capacitor can be used to implement any of the intervals mentioned in the table. Since the decay of a capacitor is

exponential the time a capacitor charged to the signal value takes to decay is proportional to the log of the signal. By counting this time at various rates can give any quantisation interval. It can therefore be assumed that logarithmic quantisation is currently realisable. Various methods of logarithmic quantisation are discussed in a survey by Cantarano and Pallotino (301). For very high speed conversion it is often necessary to use flash converters. This consists of a comparator for each level of quantisation. The signal is presented simultaneously to each comparator and the outputs of the comparators are combined to give the digital value of the signal. For linear A/D's this type of conversion requires 16 window comparators for 4 bits and is not usually used above 4 bits. However with logarithmically spaced levels the number of comparators required is greatly reduced and this method becomes more attractive.

2.4.2 Integration of Log Quantised Signals

Section 2.3 showed that the calculation of the integral square or mean integral square can be reduced to

$$\overline{x} = 2 \int_0^{X_L} 1\ X\ 1\ P(X)dX \qquad - (2.3.8)$$

Hanrahan (105) has analysed various methods of evaluating the above integral using logarithmic quantisation of the signal.

The methods considered were

(a) A form of Simpsons' Rule due to Meisel.

(b) Trapezoidal Rule Integration.

(c) Tangent Rule Integration.

Meisels integration results in constants which except for 6,02dB intervals cannot be expressed as integers. It would be necessary to do calculations to a number of decimal places to avoid truncation error.

The trapezoidal and tangent formula result in constants which can be represented as integers in a table look-up but the tangent formula results in a simpler table and also less integration error and so this formula was used. A graph of the effect of quantisation error from various integration methods for a gaussian signal is reproduced below in fig. 2.4.2. for (105). From this figure it can be seen that the tangent formula gives the best performance of those examined and is also the simplest to implement. The application of this formula to log quantised signals is therefore treated in detail.

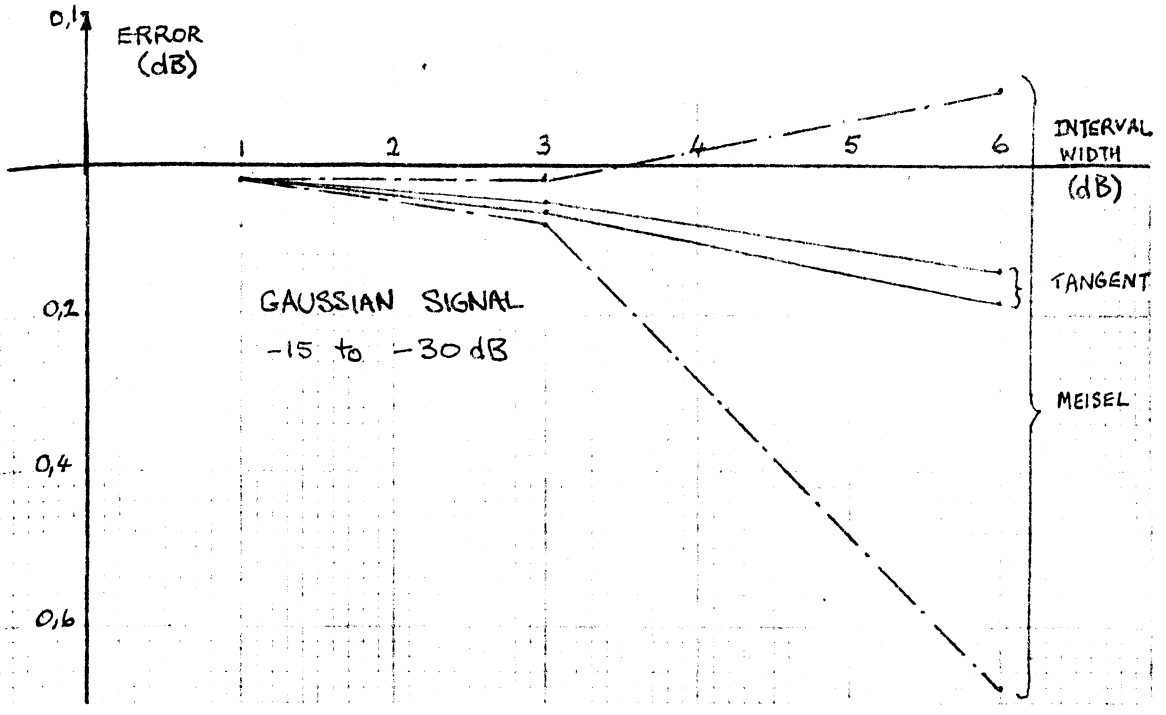

Figure 2.4.2 Effect of Quantisation Error for Various Integration Formulae (105)

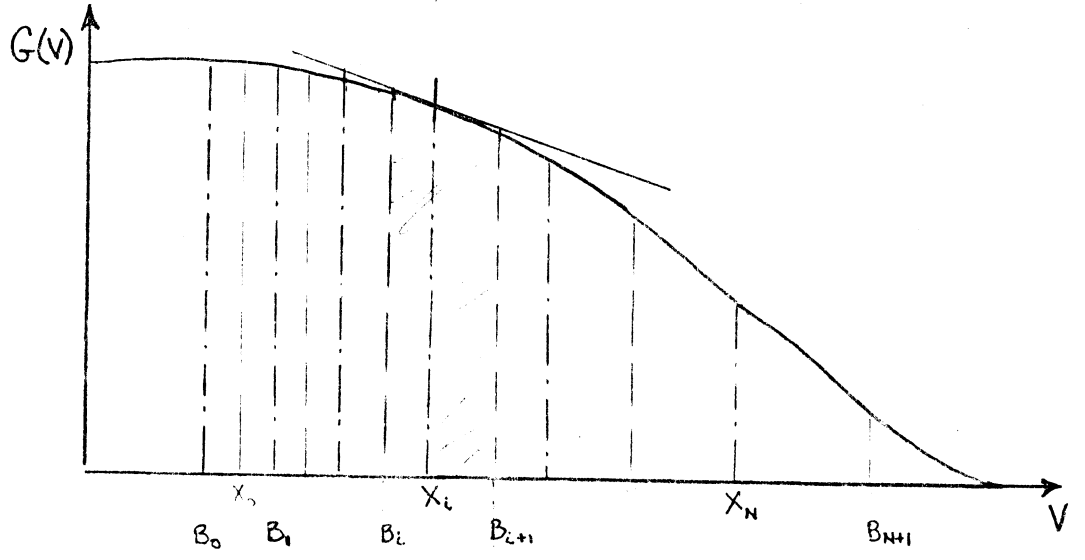

Figure 2.4.3 Tangent Formula Integration of a general function G(V)

2.4.3 Tangent Formula Integration with Log Spaced Abscissas

Hanrahan (105) showed that the tangent formula for logarithmic quantisation reduces to a simple integer summation via a table look-up. This derivation is reproduced here as it forms a basis for this work. The tangent integrating formula uses the midpoints of the quantising intervals as opposed to the thresholds themselves. So we define fictitious boundaries B_i such that X_i are the midpoints so that

$$X_i = \frac{B_i + B_{i+1}}{2} \qquad - (2.4.4)$$

where B_i are the fictitious boundaries of the quantiser

X_i are the midpoints of the boundaries

This is illustrated in fig. 2.4.3 where G(V) is a general function. Since the quantiser is logarithmic the threshold levels are related by the formula (2.4.2) so

$$B_i = B_o \, b^{ai} \qquad - (2.4.5)$$

Referring this to the midpoints we get

$$X_i = \frac{B_o}{2} \left(b^{ai} + b^{a(i+1)} \right)$$

$$= \frac{B_o}{2} \left(1 + b^a \right)^{ai} \qquad - (2.4.6)$$

For the lowest threshold level B_o this becomes

$$X_o = \frac{B_o}{2} \left(1 + b^a \right) \qquad - (2.4.7)$$

In a similar fashion the i'th interval midpoint becomes

$$X_i = \frac{B_i}{2} \left(1 + b^a \right) \qquad - (2.4.8)$$

The contribution of the i'th integral to the total integral is

$$\int_{B_i}^{B_{i+1}} G(X)dX = G(X) \left(B_{i+1} - B_i \right) \qquad - (2.4.9)$$

and the i'th weight of the total integral is

$$hw_i = B_{i+1} - B_i \qquad - (2.4.10)$$

This can be better expresed in terms of the reference midpoint X_o from (2.4.7) and (2.4.8)

$$hw_i = 2X_o \, b^{ai} \left(\frac{b^a - 1}{b^a + 1} \right) \qquad i = o, \ldots, N \qquad - (2.4.11)$$

and separating the constant and variable parts becomes

$$h = 2X_o \left(\frac{b^a - 1}{b^a + 1} \right) \qquad - (2.4.12)$$

and $$w = b^{ai} \qquad - (2.4.13)$$

This yields weights which are in closed form and independent of the scale factor. Also the actual integration range is increased from X_o to X_N to B_o to B_{N+1} (see fig. 2.4.3) which is a greater range.

2.5 Algorithm for Tangent Formula Integration

Hanrahan (105) derived a simple algorithm which reduces the mean square integral to a table look-up and summation. This method was used in this study and so the algorithm derivation is included here from (105). The

mean square value was shown to be

$$\overline{x^2} = k \sum_{i=o}^{N} u_i \, P(V_i) \qquad - (2.3.12)$$

where $ku_i = 2h\, w_i\, X_i$ - (2.3.11)

The values of $P(X_i)$ can be determined by taking a sufficiently large number of samples, say M, and classifying the sample according to whether it satisfies

$$x(t) \quad X_i \qquad - (2.5.1)$$

The values which satisfy this condition will be C_i, say, giving the cumulative probability distribution function $P(X_i)$ as

$$P(X_i) = \frac{C_i}{M} \qquad - (2.5.2)$$

we can define $\lambda_i(m)$ for each sample as

$$\lambda_i(m) = 1 \qquad o \leq i \leq I_m$$
$$= o \qquad \text{otherwise} \qquad - (2.5.3)$$

This is simply an array of 1's and o's indicating which levels the mth sample exceeds. Then

$$C_i = \sum_{m=1}^{M} \lambda_i(m) \qquad - (2.5.4)$$

Substituting into (2.5.2) and then into (2.3.15) yields

$$\overline{x^2} = \frac{k}{M} \sum_{i=o}^{N} u_i \sum_{m=1}^{M} \lambda_i(m) \qquad - (2.5.5)$$

This simplifies by changing the order of summation

$$\overline{x^2} = \frac{k}{M} \sum_{m=1}^{M} S(I_m) \qquad - (2.5.6)$$

where $S(I_m) = \sum_{i=o}^{N} \lambda_i(m)\, u_i$

$$= \sum_{i=o}^{I_m} u_i \qquad - (2.5.7)$$

since $\lambda_i(m)$ is zero for all i greater than I_m according to (2.5.3). The mean square integral then becomes for M samples

$$\overline{x^2} = \frac{k}{M} \sum_{m=1}^{M} S(I_m) \qquad - (2.5.8)$$

which is an algorithm in the form of a table look up. The weights are $k u_i = h w_i X_i$ according to equation (2.3.11) and I_m is the output of the analogue to digital converter for sample m and $S(I_m)$ is a table built up of the weights. The table entry is added to an accumulator each time a sample is taken that falls within that interval.

For the tangent formula it was shown that the weights and constant are

$$w_i = b^{ai} \qquad - (2.4.12)$$

and $$k = 2V_o \left[\frac{b^a - 1}{b^a + 1}\right] \qquad - (2.4.13)$$

substituting these formulas into (2.3.11) and simplifying using (2.4.8) and (2.4.5) leads to the weights for $S(I_m)$ as follows

$$u_i = b^{2ai} \qquad - (2.5.9)$$

$$k = 2V_o^2 \left(\frac{b^a - 1}{b^a + 1}\right) \qquad - (2.5.10)$$

In the case of the various intervals in table 2.4.1 this leads to the following

Interval (dB)	1	3,01	5	6,02
b^{2a}	1,258925	2	3,16228	4

Table 2.5.1 Values of u_i for various quantisation intervals

The case for both 3,01dB and 6,02dB appears attractive but especially the case for 3,01dB as the stored value table is

$$S(I_m) = S(r) = \sum_{i=o}^{r} 2^i \qquad - (2.5.11)$$

This is shown in table form below for a converter with 8 thresholds in binary and octal form. This makes it feasible to do the integration in dedicated logic hardware or in a simple computer capable of integer addition. With the multiplication process avoided the algorithm can be implemented in real time up to approximately 20kHz.

	Table Entry S(r)								
r	Binary								Octal
7	1	1	1	1	1	1	1	1	377
6		1	1	1	1	1	1	1	177
5			1	1	1	1	1	1	77
4				1	1	1	1	1	37
3					1	1	1	1	17
2						1	1	1	7
1							1	1	3
0								1	1

Table 2.5.2 Table look-up values for 3,01dB quantising intervals using tangent formula

2.6 Conclusions

The foregoing chapters have shown that a digital method using logarithmic quantisation will provide a simple method of calculating the mean square value or IS value which enables a variety of IS-based measurements to be made which is useful in acoustic modelling work.

The formula for integration of the mean square value was developed using statistical averaging in place of time averaging. This combined with logarithmic quantisation leads to a very simple algorithm which can be implemented on a mini-computer at high speed.

This formula can be modified for the integral square calculation very simply by not taking the mean. Therefore

$$\overline{x^2} = \frac{k}{M} \sum_{m=1}^{M} S(I_m) \qquad (2.5.8)$$

$$\therefore \int_0^T x^2 \, dt = k \sum_{m=1}^{M} S(I_m) \qquad (2.6.1)$$

When using the above formula for calculation of reverberation decay using Schroëders method the formula (1.4.6) becomes

$$\langle s^2(t) \rangle = N \int_t^\infty r^2(x) \, dx \qquad (1.5.6)$$

$$= N k \sum_{m=m_t}^{M} S(I_m) \qquad (2.6.2)$$

where M = a large number of samples
m_t = m'th sample at time t_m

In order to implement this it is simpler to use (1.4.7) and calculate

$$s^2(t_m) = kN \left[\sum_{m=1}^{M} S(I_m) - \sum_{m=1}^{M_t} S(I_m) \right] \qquad - (2.6.3)$$

This can be more simply put into a decay curve in decibel form. Since all calculations are ratios it is not necessary to know the constants k or N. Defining the zero dB value as the value at time zero we get

$$D(o) = 20 \log_{10} \sum_{m=i}^{M} S(I) \qquad (2.6.4)$$

or the total integral and the decay curve becomes

$$D(t) = 20 \log_{10} \left[\frac{\sum_{m=1}^{M} S(I_m) - \sum_{m=1}^{M_t} S(I_m)}{\sum_{m=1}^{M} S(I_m)} \right] \qquad - (2.6.5)$$

Thus if the only time dependant term in the above equation

$$\sum_{m=1}^{m_t} S(I_m)$$

is calculated and stored at various values of t, then the decay curve

can be calculated when the total integral for M samples is known by inserting the values into equation (2.6.5). Put more simply this means that in order to be able to reproduce the decay curve using Schroëders Method and the algorithm developed it is necessary to store values of the accumulating integral at various points along the decay. These values are then related to the total integral to get the decay curve. The accumulating integral need be known only at intervals of 5ms or similar interval.

The same thing may be accomplished by storing 'snapshots' of the accumulating probability density function at various intervals. Afterwards these can be formed into the integral using the weights for each quantising level. This first method was used in this study but either method could be used with the equipment built. The second method is a good illustration of the time average as a statistical average.

Once the decay curve has been calculated, then values for RT, EDT, IRT, etc. can be calculated from this curve.

The choice of quantisation interval depends on two considerations which tradeoff with each other. As the quantisation interval is reduced the complexity of the quantiser is increased. In order to make the algorithm simple it is best to choose an interval which provides a simple look-up table. Since values of u for 1dB and 5dB intervals are irrational a rounding error will occur in the computer. However the 3,01 and 6,02dB intervals yield integer values of u and no rounding error occurs. These quantisation intervals are easier to implement as well since they are related to the binary number system. From the figure 2.4.2 it can be seen that the quantisation error can be greatly reduced if 3,01dB intervals are used instead of 6,02dB intervals.

Therefore logarithmic quantisation using 3,01dB intervals was chosen for this study.

The next chapter will describe the equipment already available and show how the logarithmic quantisation can be realised.

3. MEASUREMENT SYSTEM OVERVIEW

In the first chapter the requirements and constraints of acoustic modelling were introduced. The advantages of a digital system with logarithmic quantisation were shown. In the second chapter the advantages of logarithmic quantisation were strengthened by the simplicity of algorithms for Integral Square which result from the method.

In this chapter the measurement system is introduced. An acoustics laboratory had been developed and the intention of this study was to extend the capabilities to include room acoustic modelling studies. The existing system will be described together with the required extensions for modelling work.

3.1 Acoustics Measuring Equipment

The selection of instrumentation was largely made from available equipment which consisted of the following:

1) B + K 4135 quarter inch condenser microphone with UA 0035 adapter and B + K 2619 cathode follower
2) B + K 2606 measuring amplifier with continuously variable gain and facility for connection of filter sets
3) B + K 1614 filter set with octave filters up to 125kHz and third octave filters up to 160kHz
4) model to 1/8th scale of an existing reverberation room.

In room acoustic modelling the main problem is the lack of suitable transducers. In this case the limitation was the frequency response of the microphone. The $\frac{1}{4}$ inch microphone has an open circuit frequency response of 3.9Hz to 100kHz ($\pm$ 2dB) whereas the rest of the instrumentation has a frequency limit of 200kHz $\pm$ 2dB (except of course the filter set).

An 1/8th inch microphone is available commercially but one was not available for this study. Since the frequency response of the microphone is determined by the diameter of the condenser this microphone has a frequency response up to 140kHz $\pm$ 2dB, but since the sensitivity is proportional to the area of the condenser the sensitivity is only a quarter (-12dB) that of the $\frac{1}{4}$ inch microphone. Assuming the same preamplified noise this will require a four times more powerful sound source to obtain the same dynamic range.

The limiting factors to the dynamic range are the output power of the sound source and the electrical circuit noise of the measurement chain. The circuit noise was measured (see fig. A5) and was found to be below 35dB equivalent SPL ($<5\mu V$) for the range 1kHz to 100kHz measured in third octave bands.

The output power of the sound source should therefore be greater than 85dB measured in third octave bands for the same range for a 50dB dynamic range, measured at a typical distance as would be used in a model room. The upper limit of SPL for the microphone is 168dB (3% distortion limit) therefore no damage would result to the microphone for a sound source of that capability. The dynamic range is more likely to be limited further down the measurement chain by the voltage swing of the squaring circuit (if analogue squaring is done) or the sample and hold and A/D converter. A description of the sound source used is given in Appendix 5.

In summary then the acoustics equipment used provided no restrictions on the dynamic range and limited the frequency response to 100kHz for the $\frac{1}{4}$ inch microphone used.

3.2 Computer System

3.2.1 Hardware

A minicomputer was available enabling a computer-based instrument system to be designed. The system consisted of a 16 bit NOVA 1200 minicomputer. NOVA-line minicomputers are particularly useful because they can easily be interfaced to user-devices. The CPU has four accumulators via which all data transfers and arithmetic operations are done. It can address 64 I/O devices and 32 k of memory of which 16 k was implemented. Data can be transferred to the I/O devices either under program control or by data channel (direct memory access). A vdu and matrix dot line printer were available.

The operating was dual floppy diskette based with a small core resident section and diskette based overlays.

A rack of acoustics instruments had been developed which was connected by the 48 line I/O bus. The dual 10 bit D/A converters of this rack were used to drive an X-Y plotter to produce decay curves. The other equipment in the rack was not used.

Below is a block diagram of the system hardware.

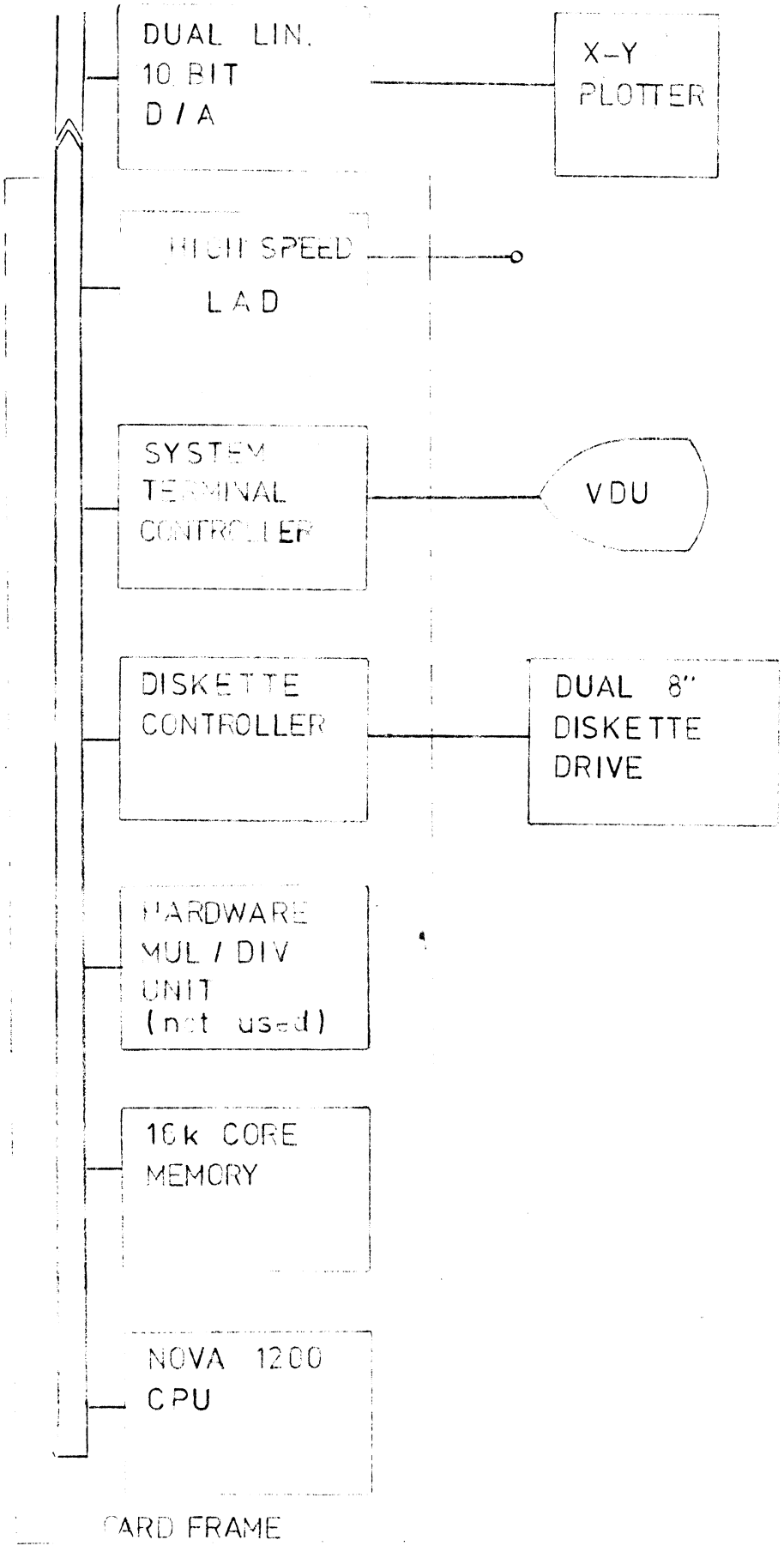

Figure 3.2.1 Block Diagram of NOVA 1200 system

3.2.2 Software

The operating system consisted of a small resident core section and diskette based overlays. The core resident section occupied less than 2000 words of core leaving 14 k available for user programs storage.

The diskette operating system was Decision Diskette Operating System (203). This used a linked list of free sectors and so allowed files to grow and shrink as required. The operating system also allowed the user to access routines called primitives within the operating system from within assembly language programs. This allows the user to create, open, close, read and write data files on the system. A number of these routines were used in the call drivers for the C5BASIC program LADEXER.

One of the general operating system commands allowed an image of the core between two locations to be stored as a binary file on the system. Unfortunately the file format is not supplied but this was determined and is shown in section 5.6.4. Routines written in assembly language were written which enabled C5BASIC programmes to access data stored by the IMAGE command. This allows the user to use the whole of core except for the area occupied by DDOS for data storage. This results in very nearly 14 k available for data storage.

Applications programmes were written in C5BASIC (204, 205). This is an extended version of Data General BASIC which allows communication with assembler routines. Provision is made for the transfer of various formats of numbers between C5BASIC and the assembler routines. These routines are called call drivers and allow the C5BASIC to communicate with non-standard devices (in this case LAD and D/A converters) as well as communicating with the operating system in order to read files created by the IMAGE command. A description of the C5BASIC package is included in Appendix 2.

The C5BASIC package also includes routines to read and write data files from BASIC. However this facility was not used for two reasons:

i) In order to use the facility it would be necessary to have the C5BASIC package resident in core in order to save the data. Since real-time processing is not possible (discussed later) it was felt that the data storage area should be maximised.

ii) Files stored by the IMAGE command cannot be read by the standard routines of C5BASIC.

The use of a high level language such as BASIC allows the applications programmes to be easily modified, and the interactive nature of BASIC makes testing easier.

3.2.3 Interfacing to NOVA Computers

One advantage of this line of computers is the ease with which they can be interfaced. Data transfers can be considered as belonging to two distinct types.

i) Programmed transfers
ii) Data channel transfers.

Programmed transfers take place under the control of the program and data is transferred by a program instruction. The interface usually signals its readiness to transfer data by setting or resetting BUSY or DONE flip flop. These signals are then tested by program instructions so that the hardware of the interface holds up the program until it is ready and then data transfer takes place. The two flags BUSY and DONE are normally complements of each other but they can be used independently. Transfer by programmed transfer is therefore limited in speed to the shortest loop which can transfer the data, store it or load it, test for termination and loop.

Data channel transfers (direct memory access) are transparent to the program being executed, and take place at a much faster rate. The data channel operates on a daisy chain system of priority with the highest priority device nearest the CPU. In the system used the diskette controller had the highest priority so that it was not possible to do diskette transfers while doing LAD transfers without losing data. Thus it was not possible to store data directly on the diskette.

The number of levels of the LAD also affects the length of the program transfer loop if integration is to be done in real time. If the converter has 16 levels or less the algorithm loop is very much shorter and the integration can be done at 70kHz. For more than 16 levels the maximum frequency reduces to 22,3kHz because the table lookup entries become larger than 16 bits and a 32 bit table must be used.

Below is a table summarising the various data transfer speeds. The table was constructed using the instruction times from the manufacturers data sheets and the call driver "MSVS" from (105) which was suitably modified for each case of programmed transfers. For model work it would be preferable to sample at rates greater than 200kHz and no programmed transfers can accommodate that rate. It can be clearly seen that for model frequency work data channel transfers would be the choice.

Programmed Transfers	Time (μs)	Maximum frequency (kHz)
Store only	11,55	86,6
Integration single precision lookup ($\leq$16 levels)	14,25	70,1
Integration double precision lookup ($>$16 levels)	44,75	22,3
Data Channel Transfers		
One sample per word	1,2	833
Two samples per word	1,2	1666

The data channel controller is more complex in terms of hardware than the programmed transfer controller but this is not important in the choice of interface method and the direct memory access method was chosen.

Details of the interface design is given in the following chapter.

3.3 Reverberation Room Model and Sound Source

A 1/8th scale model of a reverberation room was available for the experiment. It was therefore possible to compare measurements made in the model with those of the full size room. The room was made of hardboard and finished in varnish. The model was tested by Robson (47) previously and the results are shown below in fig. 3.3.1. These results were made with various surface treatments and sound sources so that only the final tests with a varnished surface can be compared with the results obtained in this test. The scaled reverberation times from (47) agree with results obtained in the full size room.

Although a small impulse source was available, the signal to noise ratio was small due to the circuit noise of the preamplifier. A larger sound source was therefore designed (which is described in Appendix 5) and using this a signal to noise ratio of 85dB was obtained over the frequency range under study. See figures 3.3.2 and 3.3.3.

3.4 Conclusions

There was a fair amount of equipment available for modelling studies but the main component, a high speed logarithmic analogue-to-digital converter (LAD) was not available. The design of the high speed LAD, its interface to the NOVA 1200 minicomputer and the writing of software to drive the LAD were the major part of this work. Previously (105) a LAD had been designed with 17 levels of 3,01dB each and working up to a maximum of 40kHz. For modelling work it was necessary to sample up to 200kHz or greater and this required a different approach to the conversion and interface. The following chapters present the design and testing of the high speed LAD.

Frequency kHz	Reverberation Times (RT)(msec)			
	Before Varnishing	Brush Varnishing	Spray Varnishing	Spray Varnishing (Impulse)
5,04	198	301	407	431
6,4	199	292	366	400
8,0	154	250	324	350
10,0	161	253	273	290
12,8	135	203	263	251
16,0	121	177	229	220
20,0	108	178	187	204
25,2	95	142	162	173
32,0	93	126	130	152
40,0	79	121	113	108
50,4	89	98	99	106
64,0	81	87	86	97
80,0	70	78	74	81
100,0	75	81	71	81
Dry Bulb Temperature	$80^{o}F$	$76^{o}F$	$73^{o}F$	$73^{o}F$
Wet Bulb Temperature	$60^{o}F$	$61^{o}F$	$62^{o}F$	$62^{o}F$
Relative Humidity	34%	45%	57%	57%

Figure 3.3.1 Reverberation times of 1/8th scale model (47)

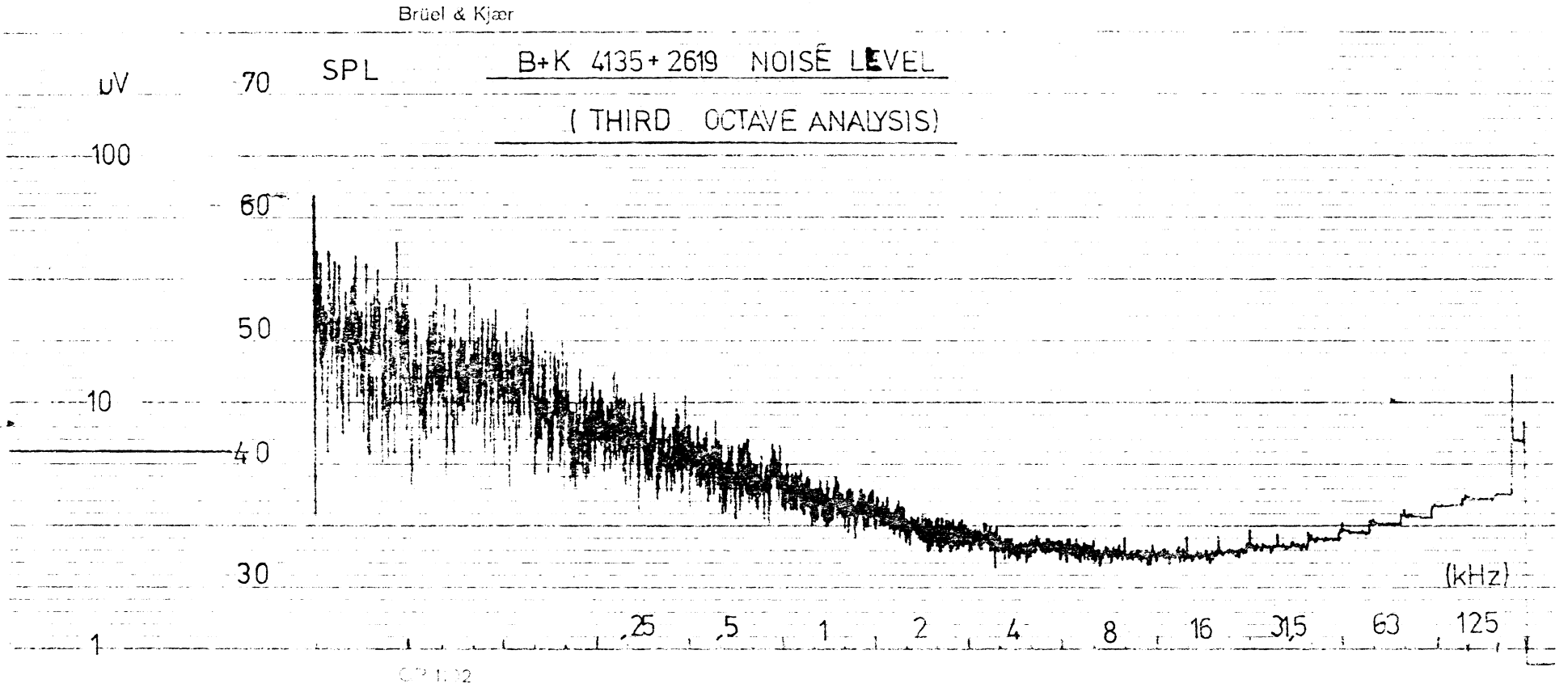

Fig 4.3.2 Mic noise level

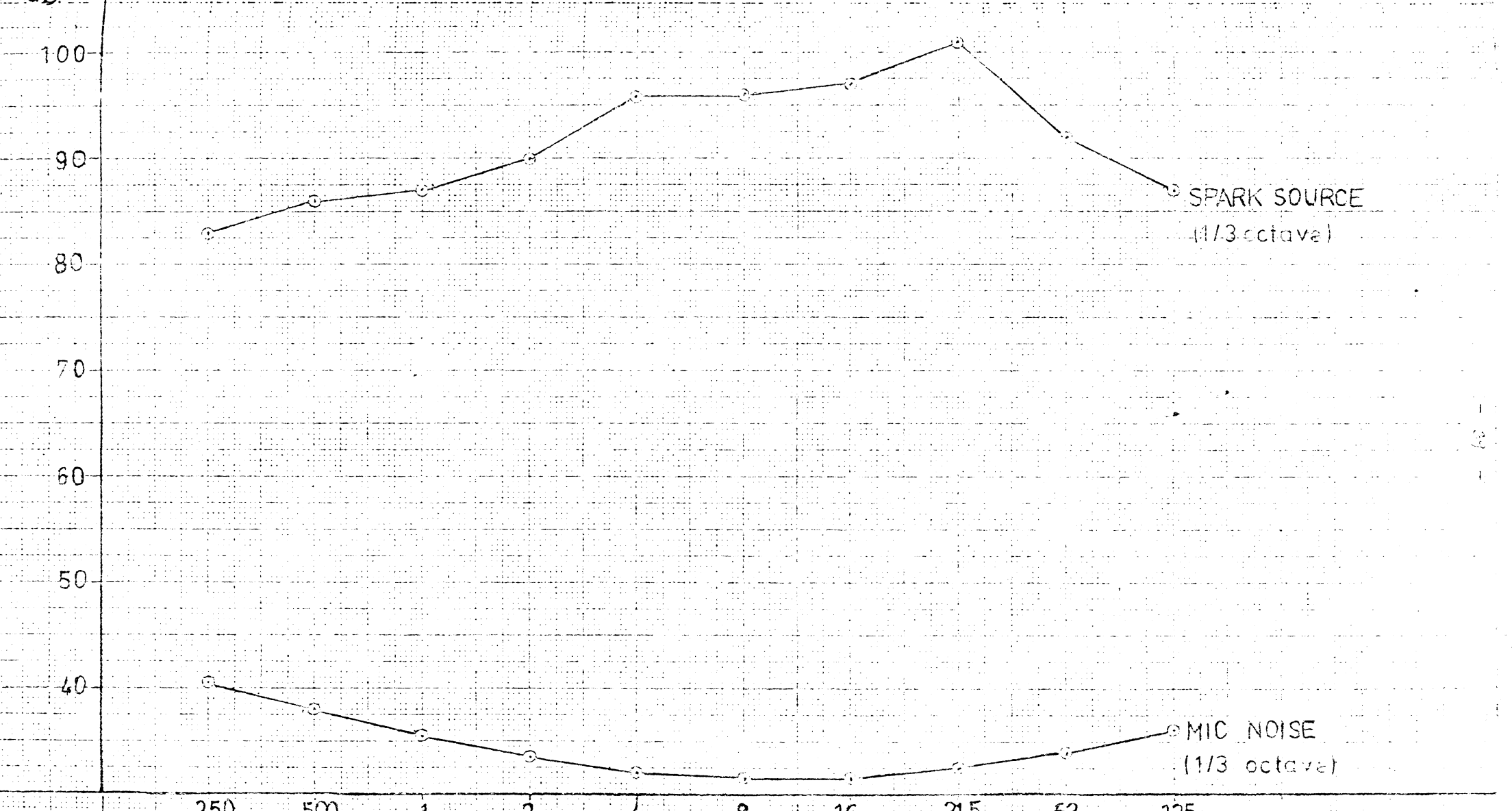

FIG 3.3.3 PEAK OUTPUT VS FREQUENCY

4. DESIGN OF A HIGH SPEED LOG A/D (LAD)

4.1 Design Specifications for LAD for modelling work

4.1.1 Specifications

The design specifications are listed below:

1) Quantisation - logarithmic, with 3,01dB intervals
2) Dynamic Range - 50dB
3) Maximum input voltage - $\pm$ 10V
4) Overload margin 3,5dB
5) Maximum signal frequency - 140kHz
6) Sampling frequency - up to 280kHz
7) Conversion time - 3,5 μs maximum
8) Code - Sign and magnitude in gray code.

The choice of code is not critical but gray code has the advantage that only one bit changes at a time and it can be encoded very efficiently. The choice of sign and magnitude form for the code arises from the fact that the algorithm uses only the absolute value of the signal.

The signal frequency range of up to 140kHz was chosen because this is the useful limit for a 1/8th inch microphone. Above this frequency the response falls off at about 12dB per octave and the microphone loses its omnidirectional properties. Although a $\frac{1}{4}$ inch microphone was used in the higher limit was chosen so that the instrument would be capable of operating with both microphones.

The sampling frequency limit is dealt with in section 4.1.3.

4.1.2 Sampling Errors

The sampling requirements for the converter proved to be very stringent due to the high frequencies and large dynamic range of the signal.

Due to the high frequency of the signal a sample and hold with a low aperture uncertainty time or aperture jitter is required. This is the time error and consequent amplitude error due to the Sample and Hold circuit. This is important at the lowest levels of the converter because both the amplitude probability and rate of change of the signal is at its highest at this point. Therefore the required aperture uncertainty time must be quantified.

Papoulis (107) has shown that for bandlimited gaussian signals with a maximum frequency of W_o the expected value or mean rate of change of the signal is

$$E\left\{\left|f(t+\tau) - f(t)\right|^2\right\} \leq 4P \sin^2 (w_o\tau/2) \qquad - (4.1.1)$$

which for small values of w reduces to

$$E\left\{\left|f(t+\tau) - f(t)\right|^2\right\} \leq Pw_o^2\tau^2 \qquad - (4.1.2)$$

where P is the mean square value of f(t)

w_o is the maximum frequency

$E\{\}$ is the ensemble average or expected value.

Thus the expected maximum rate of change is

$$E\left\{\frac{df(t)}{dt}\right\} \leq \sqrt{P}\, w_o \qquad - (4.1.3)$$

The signals referred to in 4.1.1 to 4.1.3 have an upper frequency of w_o and a lower frequency limit of dc. In practice the signal to be used will be filtered to octave or third octave bands. However this difference will not affect the maximum rate of change. As the lower frequency limit approaches the upper limit the signal approaches a sine wave so it is not surprising that the maximum rate of change of the signal is the same as the maximum rate of change of a sine wave of frequency w_o.

In order to choose a sample and hold it is necessary to estimate the maximum rate of change of the signal. The argument below will estimate this figure to arrive at a "ball park" figure of required aperture uncertainty time for the sample and hold circuit.

For a converter using 3,01dB intervals, Hanrahan (105) has shown that the onset of error due to clipping occurs fairly rapidly when the RMS value of the signal is less than 8dB below the highest level of the converter.

Since the voltage swing on the sample and hold circuits considered is about $\pm$ 10 volts the highest level of the converter would be well below that to prevent the sample and hold circuit saturating or overloading. The maximum level would typically be $\pm$ 5V. Therefore the signal used would have an RMS value of approximately 2V (8dB below 5V).

Using these values in (4.1.3) gives

$$E\left\{\frac{df(t)}{dt}\right\} \leq \sqrt{2} \times 2\pi \times 140 \times 10^3 = 1,24 \text{ V/}\mu\text{s}$$

With a maximum level of 5V and a 50dB or greater dynamic range the lowest level will be less than 15mV. The aperture uncertainty time (τ) must be such that the amplitude error of the converter is well below (say half) the lowest quantising threshold i.e.

$$= (0,15 \times 15 \times 10^{-3})/(1,24 \times 10^6) = 6,03\text{ns}$$

A survey of some sample and holds available is given in the table 4.1.1 in increasing cost order.

S + H	SHA 1134	MP 270	SHA 2A	SHM UH
Aperture time (ns)	35ns	10ns	10ns	10ns
Aperture uncertainty (ns)	±2ns	±0,2ns	±0,25ns	±0,2ns
Acquisition time (max.)	5,5μs	1,4μs	500ns	50ns
Accuracy with above acquisition time	0,01%	0,01%	0,01%	0,5%

Table 4.1.1 Data of Various High Speed S + H Modules

The SHA 1134 just has a short enough aperture jitter but has too slow an acquisition time. The MP 270 was therefore the cheapest device that satisfied the criteria of aperture jitter and acquisition time leaving 2,1μs for the A/D conversion.

Due to the high price of the S + H module, any idea of multiple slower converters operating in tandem was rejected because each would require a sample and hold with a low aperture jitter.

With an acquisition time of 1,4μs and a total conversion time of 3,5μs the conversion time is 2,1μs. The sample and hold MP 270 has a maximum signal range of ±10V and a lower signal limit restricted by dielectric absorption. This is the decay of the capacitor voltage due to charge redistribution in the dielectric. The decay voltage is given by

$$\Delta E = E_S \, K \log \frac{10\,(ts + th)}{ts} \qquad - (4.1.4)$$

where K = empirical constant for dielectric = $1,5 \times 10^{-4}$ for polystyrene capacitor in MP 270

E_S = Capacitor volt change

ΔE = Output voltage error

ts & th are the sample and hold times respectively.

For a signal of 140kHz the expected maximum rate of change was shown to be 1,24v/μs from (4.1.3). Therefore the expected change in 3,5μs (total conversion time) is less than 5V and so a 5V step will be considered for the dielectric decay. The sample time is 1,4μs and hold time = 3,5μs - 1,4μs = 2,1μs. The voltage error is therefore

$$\Delta E = 5 \times 1,5 \times 10^{-4} \log 10 \left(\frac{1,4 + 2,1}{1,4} \right)$$

$$= 1,05 \text{ mV}$$

Thus the MP 270 sample and hold will give errors in amplitude of less than 0,25mV due to aperture uncertainty of a signal with rate of change of

1.2V/μs. The hold error during conversion due dielectric absorption will be less than 1,05mV. These figures will be used in section 4.1.4 in order to select the threshold limits and number of levels for the converter.

The next section will examine the errors due to the sampling frequency as opposed to amplitude quantisation.

4.1.3 Sampling Rate

In order to be able to reconstruct a signal it is necessary to sample it at twice the highest frequency of the signal. However in mean square calculations it is not necessary to reconstruct the signal nor would it be feasible with the logarithmic quantisation used. Hanrahan (105) has investigated the errors due to sampling at various rates with a log quantised signal and has suggested that the following errors apply for gaussian signals of bandwidth B

$$\frac{\sigma(\overline{x^2})}{m(\overline{x^2})} = \frac{1}{\sqrt{BT}} \qquad f_s \geq f_n \qquad - (4.1.5)$$

$$= \frac{1}{\sqrt{BT}} \cdot \sqrt{\frac{f_n}{f_s}} \qquad f_s < f_n$$

where σ is the standard deviation and m the mean value of $\overline{x^2}$ of a signal of bandwidth B evaluated over a time T and f_n is the Nyquist frequency and f_s the sampling frequency.

This implies that 1/2B marks the transition between correlated and uncorrelated data. Therefore sampling at a higher rate gives no improvement because the data becomes correlated and the statistical averaging is not improved. This was the reason for specifying a maximum sampling frequency of 280kHz and this leads to a maximum total conversion time of 3,5μs. This limits the choice of conversion principle as shown in section 4.2.1.

4.1.4 Number of Quantisation Thresholds

For a dynamic range of 50dB or greater and 3,01dB thresholds the converter will need at least 17 levels of each polarity. An upper limit will be imposed by a number of factors

1) Dynamic range of sample and hold.
2) Circuit noise in converter.
3) Physical size constraints.
4) Loading on sample and hold output.

The MP 270 has a noise level of 0,5mV maximum and the hold decay error was shown to be approximately 1mV maximum. Therefore a safe lower limit for the signal would be approximately 5mV - at least 6dB above the noise. The converter should also allow a degree of overload before saturation so an upper limit of 5V for the highest threshold was chosen. This gives a dynamic range of 60dB maximum (or 20 levels) for the signal entering the converter from the sample and hold.

The circuit noise expected in the converter is not easily quantifiable. The converter was to be built on a board together with the controller and to fit in the top slot of the minicomputer. Even with good shielding the circuit noise was expected to be the limiting factor for the lowest threshold and 18 levels was chosen as a design guide giving a 54dB dynamic range.

The design of the converter according to the specifications given here is shown in the next section.

4.2 Converter Design

4.2.1 Conversion Principle

In a survey of logarithmic analogue to digital converters, Cantarano and Pallottino (301) discuss various methods of conversion and implementation. However few of the techniques described are suitable for high speed work.

Four possible techniques are shown in fig. 4.2.1. The first uses a logarithmic amplifier followed by a sample and hold and linear conversion. The circuitry involved in wide bandwidth logarithmic amplifiers is very complex and therefore also expensive. Logarithmic amplifiers are usually unipolar circuits and the problems of crossover distortion are severe considering the high bandwidth required. The low amplitude region of the signal is also of considerable significance because of the high probability density function of typical signals in that region. For these reasons the use of logarithmic amplifiers was avoided in the design.

A second principle using a single comparator and a D/A converter generates a logarithmic ramp increasing in amplitude until the comparator flips. The method is very much cheaper but it has a number of limitations. The main one is the fact that this converter requires at least the same number of clock cycles as the converter has thresholds, requiring the D/A converter to settle and the comparator to switch at each cycle. This would not be feasible for conversion in less than 20μs assuming a comparator which switches in 500ns and a D/A that settles in the same time. Successive approximation in the style of linear converters is not possible due to the uneven spacing of thresholds. Some form of rectification of the signal is

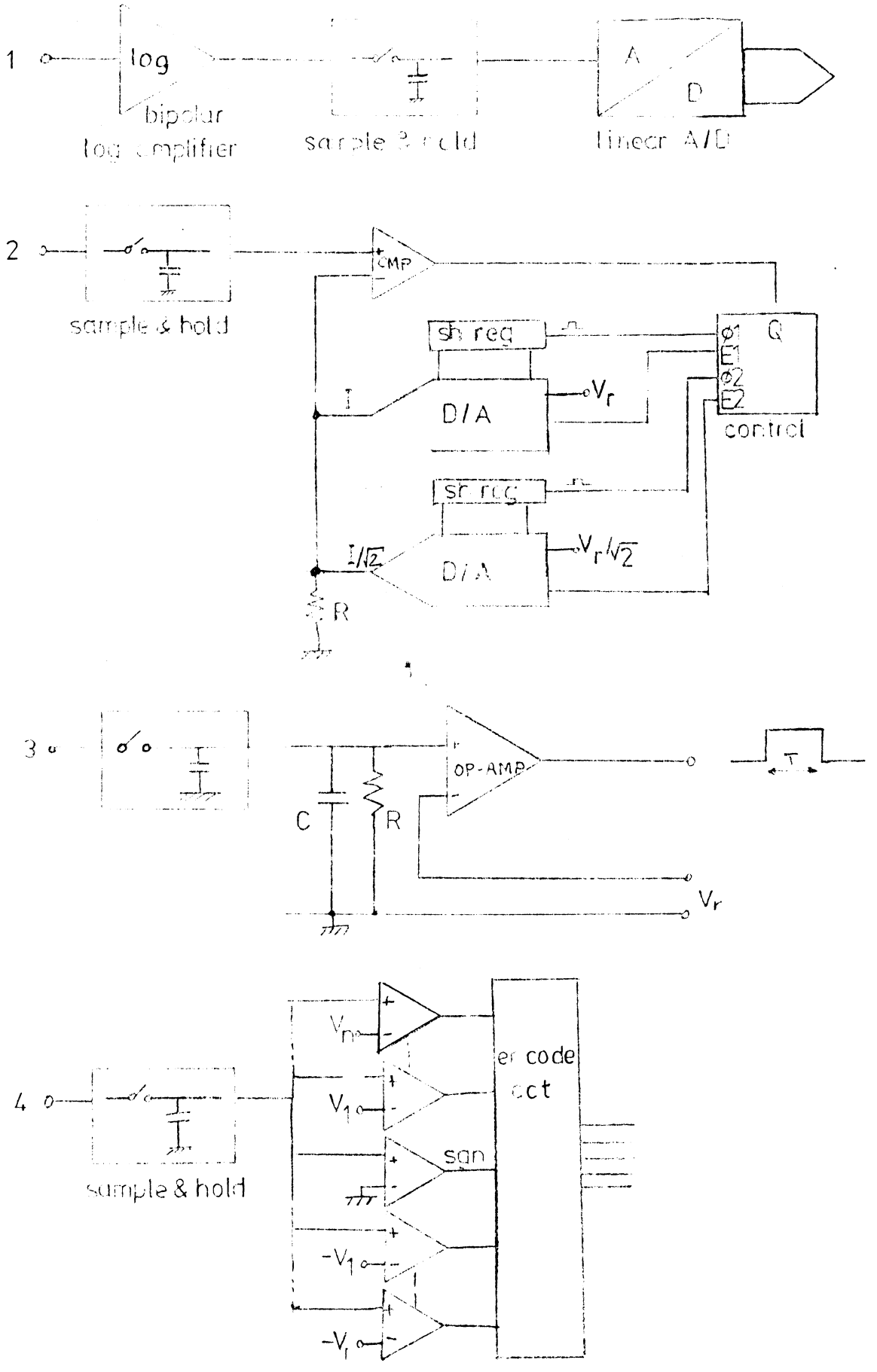

Figure 4.2.1 Methods for Log A/D Conversion

1. Log. amplifier and linear A/D
2. Log. successive approximation conversion
3. RC decay conversion
4. Flash conversion

required as this conversion principle is unipolar. Problems associated with rectifying the signal are similar to those of squaring and discussed in section 2.2.1.

The third principle shown in fig. 4.2.1 uses the decay of capacitor. Since this decay is exponential equal time slices will correspond to logarithmically spaced voltages. Thus the decay time is proportional to the log of the signal and this time can be used to enable a counter. The number in the counter will be the number of levels exceeded by the signal. This method is unipolar but could be made bipolar by using a window comparator and bipolar reference levels. However with this principle the comparator switching time must be considerably shorter than the time taken to decay by one level. Also time must be allowed for the capacitor to be charged up to the signal value. With these limitations this method is not suited to high speed work.

With the use of tandem converters ruled out by the cost of additional sample and holds, the fourth principle shown in fig. 2.4.1 appears to be the best.

Since the conversion time is only 2,1μs all of the methods considered up to now have been too slow. The fourth principle shown in fig. 4.2.1 is the fastest conversion method available and will be easily capable of this conversion speed. This principle known as parallel or flash conversion is used in the high speed video digitisers where the conversion is usually 2 - 4 bits accuracy. This consists of a bank of comparators each with a reference voltage corresponding to one of the thresholds.

Since this principle is parallel it will operate approximately at the switching speed of the comparator chosen. However for an N level converter we require 2N + 1 converters and this could give loading problems. The other main consideration in this principle is the provision of 2N voltage references - one for each threshold. This method appears to be the only method available to do the conversion in 2,1μs and so was chosen for the design.

The main sections of the design were

1) choice of comparator
2) generation of voltage reference ladder
3) circuit layout
4) interface design.

The circuit is shown in block diagram in fig. 4.2.2. It operates as follows:

Positive and negative voltage references are fed into a voltage divider resistor ladder and these voltages are each fed to a comparator. The ouputs of each comparator is wire or'ed with the corresponding threshold of the opposite polarity. When the signal from the sample and hold is applied all the outputs will be driven low if the signal exceeds the threshold i.e. $>V_i$ or $<-V_i$ where i is a threshold. These outputs together with the sign bit are fed to the encode circuit where the data is coded into gray code. Once the data has settled it is clocked into the interface and the held signal is released to track the input. Since the NOVA is a 16 bit minicomputer two samples are stored per word and the DMA transfer rate is half the sampling rate. Since the DMA handshake is so fast there is no possibility of losing a sample by the time the next sample is clocked in.

The following sections show the major sections of the design in more detail. The actual circuits used are shown in Appendix 4.

4.2.2 Choice of Comparator

The choice of the comparator was based on the following considerations:

1) Fast switching speed ($<$ 150ns)
2) Very high gain
3) Low input bias current ($<$ 1μA)
4) Freedom from oscillation
5) Low or nullable input offset voltage.

Low cost comparators such as the 710 have fast switching times but require larger overdrives and have a high input bias current. This high input bias current causes an offset error in the reference ladder which depends on the value of source resistance. This resistance cannot be made very low as the voltage reference should not be loaded too highly. With an adjustable reference ladder the effect of input bias current can be nulled. However the input offset current cannot. Therefore a device with a low input offset current was chosen. The CMP-01 chosen has an input offset current more than 1000 times less than the 710.

The high gain and freedom from oscillation are required particularly for the lower levels. The comparator should switch with a couple of millivolts overdrive and be free from latch-up. Circuits such as ECL sense amplifiers are available which are very fast and high gain but do not have the freedom from oscillation of the CMP-01, or the common mode range etc.

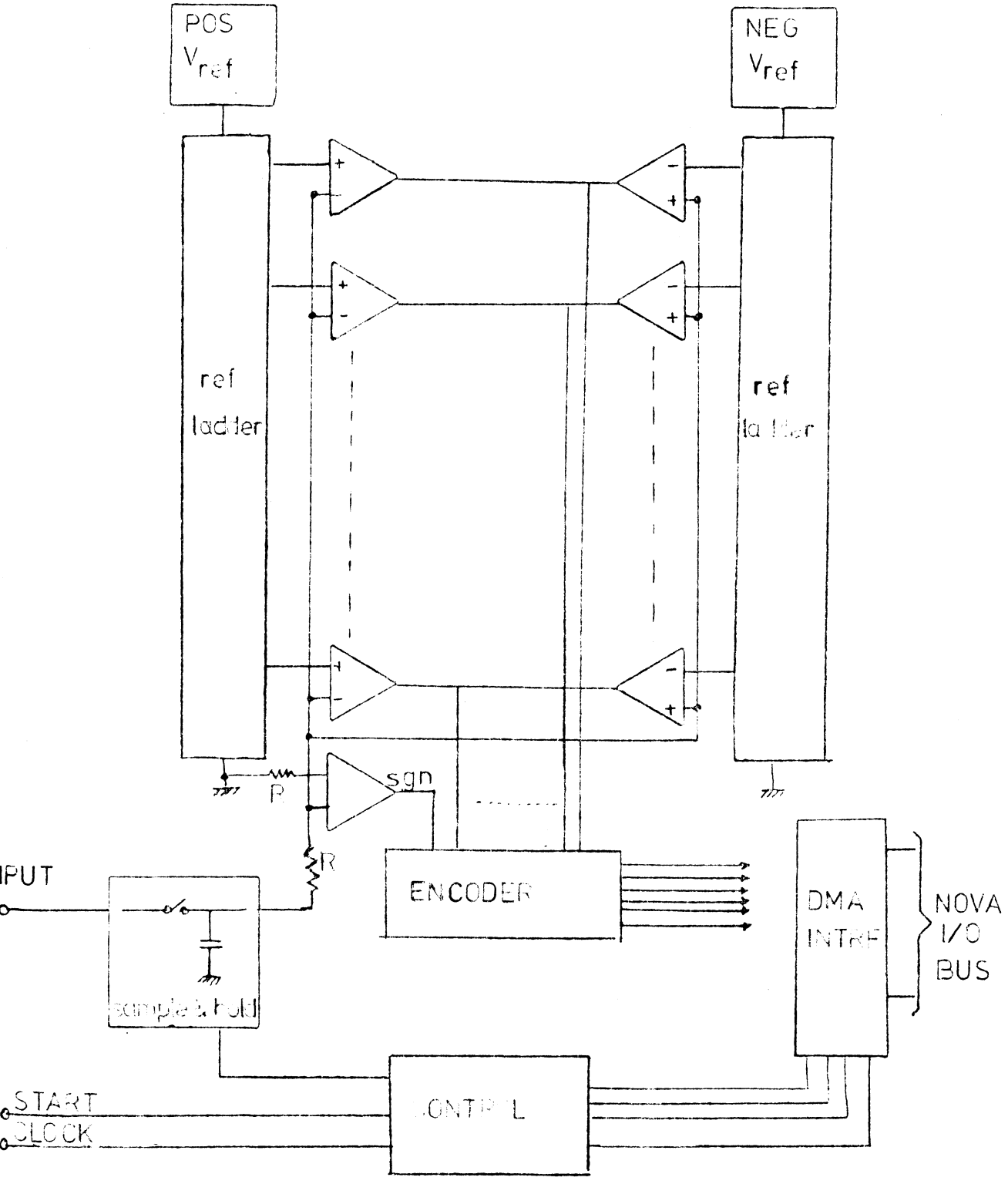

Fig 4.2.2 Block Diagram of LAD

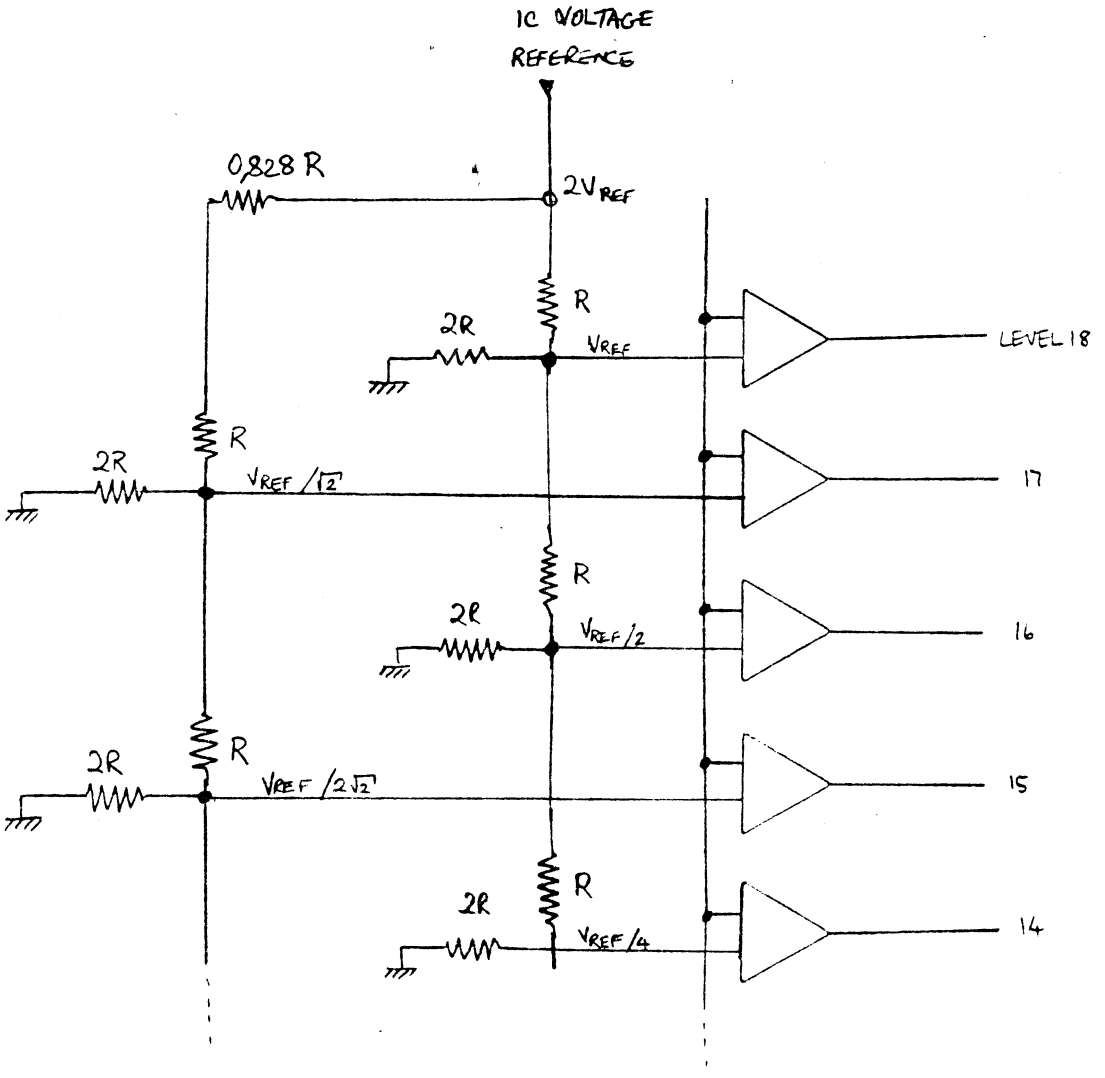

Figure 4.2.2. R-2R Voltage Reference Ladder

The wire or'ed output is optional but reduced the encode circuitry propagation delay by one gate and made the circuitry simpler. Although it would have been possible to use cheaper comparators for the less critical higher levels, the same comparator, CMP-01C by Precision Monolithics was used throughout.

The input offset voltage of the CMP-01 is typically 0,3mv. This is about 10% of that of the LM 311 and 710 comparators. Although this offset is nullable on the CMP-01 and LM 311 comparators it was felt that this was not necessary for the CMP-01 and thus helped to simplify layout of the circuit. The lower cost of the cheaper comparators would have been offset by the cost of the nulling potentiometer.

4.2.3 Voltage Reference Ladder

In order to have stable operation the source impedance seen by each leg of the comparator should be equal and as low as possible. For the CMP01C the input offset error is independent of source impedance below 5 kΩ, but the error increases rapidly beyond this value.

A voltage ladder with series resistors as in a conventional voltage divider would not be able to match source impedances and would result in errors and likely oscillations. A voltage ladder in an R-2R form has a uniform source impedance at each node of R and a 6,02dB spacing between levels. Thus in order to get 3,01dB intervals two ladders were spaced 3,01dB apart. This is shown in fig. 4.2.3 for the positive side of the converter. A similar circuit was used on the negative side. Splitting the ladder into two has the effect of separating the odd and even levels. This is an advantage in the encoder since all the odd levels contribute only to the least significant bit in gray code, and the even levels contribute to the rest of the bits.

A bipolar voltage reference was designed using the REF-01 voltage reference IC. This IC has a very stable +10V output which is mirrored using an op amp to -10V to provide the negative reference. The output current of the IC is increased using series pass transistors to provide enough drive for the ladders (4 off). The measured stability of the positive and negative references was less than 0,01% after a few minutes warmup, using a FLUKE $4\frac{1}{2}$ digit multimeter. The circuit is given in Appendix 4.

In order to get accurate thresholds very high precision resistors would be required or at least matched resistors. This problem was overcome by

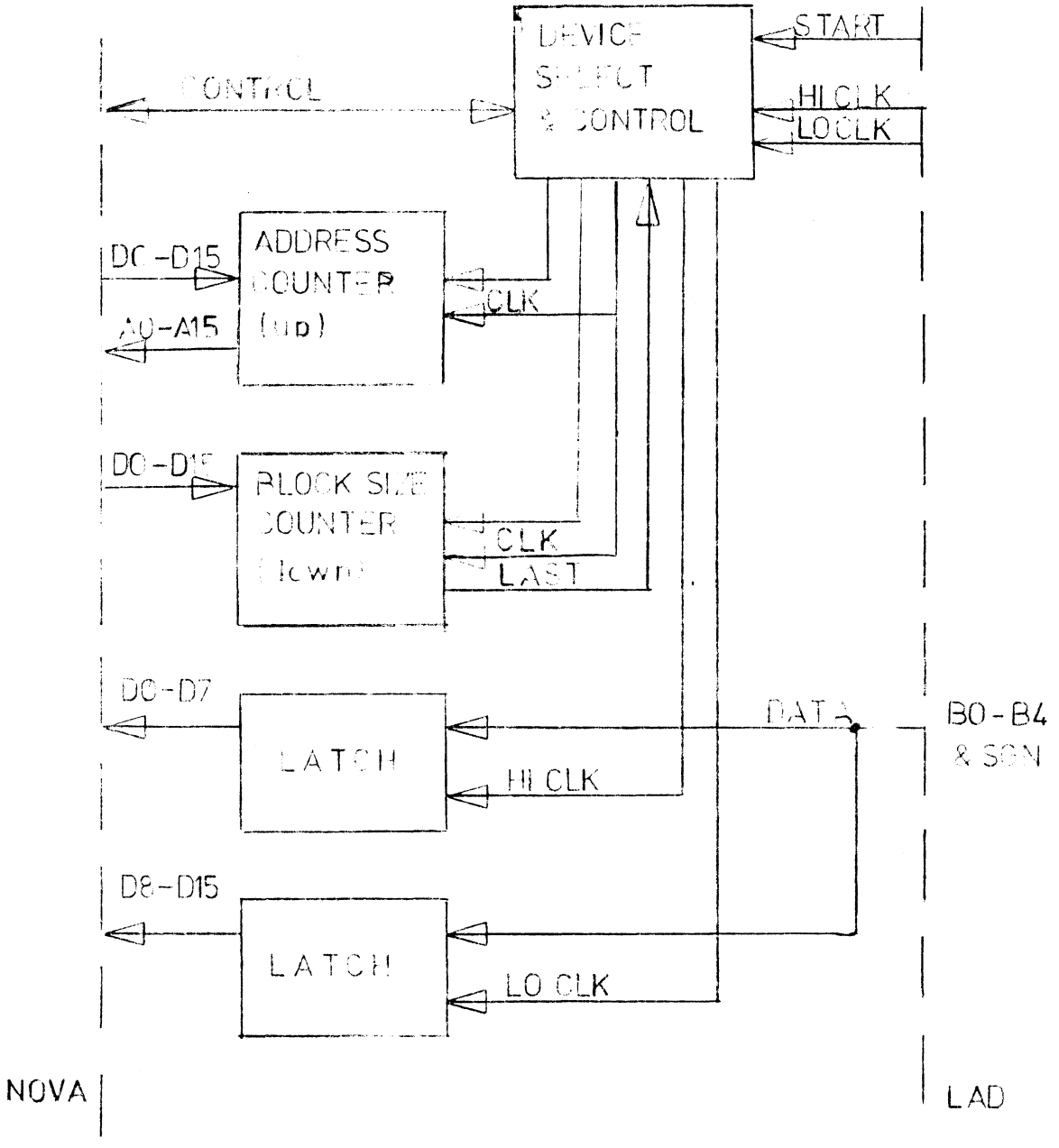

Fig 4.2.3 Block Diagram of DMA Interface

using trimpots to obtain the accurate values. This was cheaper than having precision resistors made.

A value of R = 1kΩ was chosen for the ladder network being a balance between the drive capabilities of the sample and hold and the low value of source resistance preferred for the comparator.

The bias current for each comparator causes an error in the voltage ladder which is cumulative and mirrored in the ladder 2R resistor. This error is a maximum at the highest threshold of the ladder. However this error can be eliminated when calibrating the A/D by adjusting the reference ladder in circuit.

4.2.4 Circuit Layout

Some general rules for wide bandwidth signals were used in the layout:

1) Keep analogue and digital signals apart as far as possible.
2) Use a ground plane to reduce stray capacitance between inputs and outputs.
3) Keep the comparator inputs and outputs away from each other.
4) Use decoupling capacitors at each comparator.
5) Keep signal paths as short as possible.

The circuit was laid out using each of the above guides and was aided by the fact that all odd levels were fed by a separate reference ladder and were all used only to encode bit 0 (LSB), while all the even levels were used for encoding the other bits. The encode gating was reduced to a path length of only two gates by using wire-ored logic. This helped marginally to decrease the conversion time.

The flash converter circuitry occupied an area of 190 x 285 mm. The sample and hold board was 95 x 190 mm and was mounted alongside the converter on a 381 x 381 mm board which included the DMA interface and fitted into the top slot of the minicomputer.

The ± 15V supply for the analog circuitry was fed from a separate supply which helped to reduce noise on the power rails of the analogue circuitry.

4.2.5 Interface Design

An introduction to the methods for interfacing to NOVA minicomputers was given in section 3.3.3. From the speed limitation of programmed transfers it was decided to use direct memory access or data channel transfers.

These data transfers differ from the programmed transfers in that they require no software to drive the transfer. The interface addresses the memory directly while the CPU temporarily stopped. As soon as the transfer is complete the CPU is released and continues processing. The data transfer is therefore transparent to the program being run. The interface steals a cycle to transfer the sample into the minicomputer. Typically each transfer takes 1,2 microseconds which is shorter than any instruction except the JMP instruction. At 280kHz sampling rate this will reduce program execution speed by 16,8%.

Since the interface is in control it has to generate successive addresses for the data storage and know when to release control at the end of the transfer. This is done by using two counters which are preset to the starting values:

1) Address counter which counts up the addresses.
2) Block counter which counts down the number of words transferred.

The interface is shown in a block diagram in fig. 4.2.3 and operates as follows.

1) On start up it is cleared and sits in an idle state.
2) The address and block size counters are preset using programmed transfers.
3) The transfers begin at the rate of an external clock on the receipt of a START pulse from the sound source.
   Note Once the converter is receiving a clock pulse it does conversions which are clocked into the interface but it is not until a START signal is received that the values are stored in memory.
4) For every word transferred the address counter is incremented and the block counter decremented until it reaches zero.
5) When the block size counter reaches zero all the data has been transferred and the interface releases control of the CPU. If the data transfer rate is slower than maximum, the CPU will be released between each transfer. In order to get maximum storage area for data in core, all of the memory is used except that occupied by DDOS. So the program running at the time of the transfer is the keyboard input routine of DDOS. Since the transfer of data is so quick it is not necessary to signal when transfer is complete - it will always be complete in less than half a second.

6) The data in memory is then copied onto diskette in a binary image of the core using the IMAGE command of the operating system. See section 5.6.4.

7) The BASIC language and program is then loaded and the data analysed. (This step may be skipped until a number of measurements have been made and stored on diskette.)

The interface does not require the normal BUSY and DONE flip flops associated with programmed transfers in order to preset the counters because the data may be transferred into the counters at any time (they are always DONE). Ports A and B are used for the block size counter and address counter respectively and the device code is 44 (octal). The full circuit is given in Appendix 4.

The interface was given a lower priority than diskette transfers which also use the data channel. This prevented any spurious interuppts from the LAD of diskette I/O's. For this reason no diskette I/O's could be attempted while the measurement is being taken or else samples would have been lost.

4.3 Calibration and Testing

The interface was first built and tested without the converter to ensure that it was correct. The sample and hold, log A/D and interface were all built on a 15" x 15" circuit board which fitted into the main frame of the NOVA 1200. The layout of the board is given below in fig. 4.3.1.

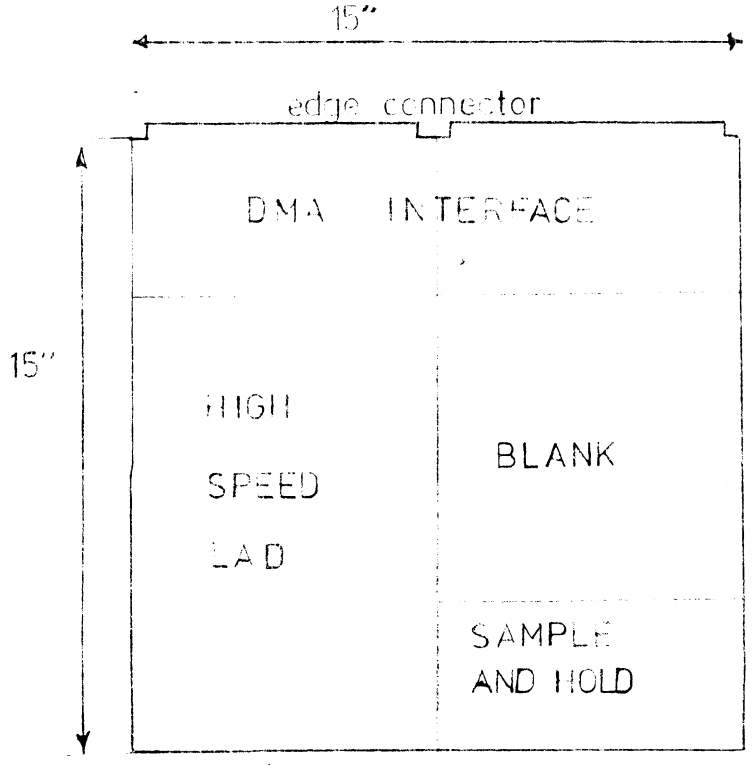

Figure 4.3.1 Layout of LAD and interface

The voltages selected for the levels are shown below in Table 4.3.1. Negative values are the same as the positive ones.

level	voltage (volts)	level	voltage (volts)
18	5,000	17	3,536
16	2,500	15	1,768
14	1,250	13	0,889
12	0,625	11	0,4419
10	0,3125	9	0,2210
8	0,1563	7	0,1105
6	0,0781	5	0,0552
4	0,0391	3	0,0276
2	0,0195	1	0,0138

Table 4.3.1 Theoretical Voltage levels of Quantiser Thresholds

Since the voltage reference ladder was built using trimpot resistors it was necessary to calibrate the ladder and to test the functioning of the converter prior to its use in acoustics modelling work. The following points were checked.

1) The accuracy of the levels set on the voltage ladder.
2) Required overdrive for comparators to switch.
3) Noise levels of converter.
4) Dynamic performance of converter.

The levels were set up using a dc signal fed into the sample and hold. The level of each threshold was adjusted until the comparator was on the verge of switching. Since the adjustment of each threshold has a slight effect on the others a few iterations were required before the levels were within 0,1% or 0,1 mV whichever is greater.

In order to check the dynamic switching and the required overdrive for switching to occur, the converter was tested using a small-signal square wave whose dc offset was varied so that it was equal to the threshold at each level giving a small overdrive in each direction. The comparators were saturated (i.e. no oscillation occurred) with less than 5mV overdrive for each level.

The noise level of the converter was checked by applying a zero volt dc signal to the converter (and sample and hold). The noise performance was poorer than expected since the lowest level of the converter switched occasionally with no signal present. This was due to the high amount of

switching noise in the computer and improved if the converter was removed from the computer. Nevertheless the converter was still capable of handling a signal with a dynamic range of greater than 50dB.

In addition to the above tests it is possible to test the accuracy of the converter using a deterministic signal which has a similar form and amplitude distribution to the signal which would be used in practice. A suitable signal is a B wave or decaying sinusoid.

$$V = V_o e^{-at} \sin wt \qquad - (4.3.1)$$

The signal can be obtained using the ringing of a pulse generator which is underdamped and removing the dc component to leave just the ringing. The signal obtained by this method was too noisy for measurement purposes and so was only used qualitatively. However the mean square value of this integral can be determined since

$$\overline{v^2} = \frac{1}{T}\int_o^T (V_o e^{-at}\sin wt)^2 \, dt \qquad - (4.3.2)$$

Integrating by parts we get

$$= \frac{V_o^2}{4at}\left\{1 - e^{-2at}\,\frac{-e^{-2aT}\left(\left(\frac{w}{a}\right)\sin 2wT - \cos 2wT\right) - 1}{1 + \left(\frac{w}{a}\right)^2}\right\} \qquad - (4.3.3)$$

which for $T = n\,\overline{11}$ reduces to

$$= \frac{V_o^2}{4aT}\,(1 - e^{-2aT})\left(\frac{\left(\frac{w}{a}\right)^2}{1 + \left(\frac{w}{a}\right)^2}\right) \qquad - (4.3.4)$$

in terms of $\hat{V}$ (the first peak value)

$$\overline{v^2} = \frac{\hat{V}^2 e^{-a\overline{11}/w}}{4aT}\,(1 - e^{-2aT})\left(\frac{\left(\frac{w}{a}\right)^2}{1 + \left(\frac{w}{a}\right)^2}\right) \qquad - (4.3.5)$$

which can be compared for a known value of $\hat{V}$, a, w and T with the value obtained using the statistical average (2.5.8). The reconstructed waveform of a sampled Bwave is given in fig. 4.3.2.

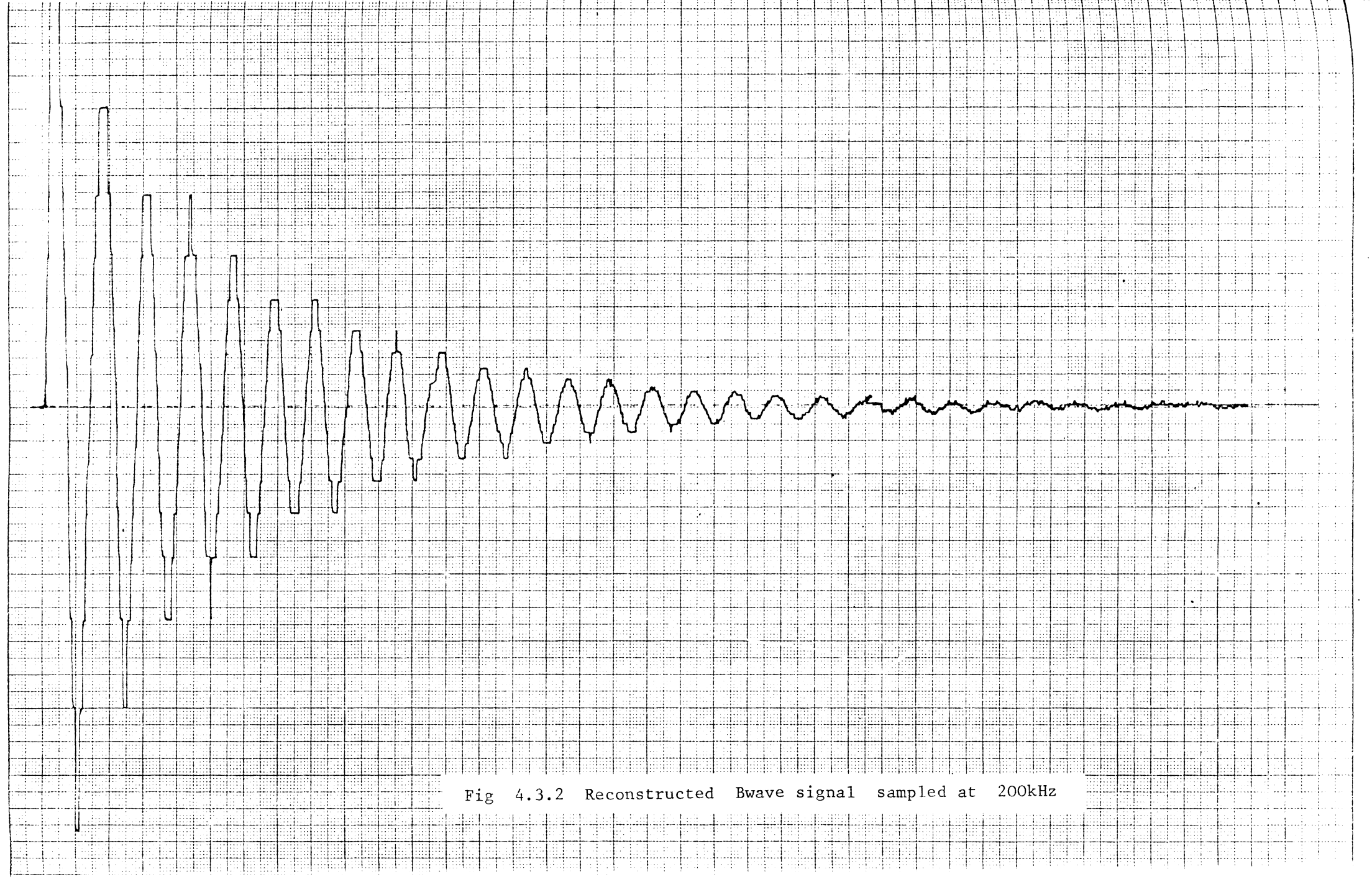

Fig 4.3.2 Reconstructed Bwave signal sampled at 200kHz

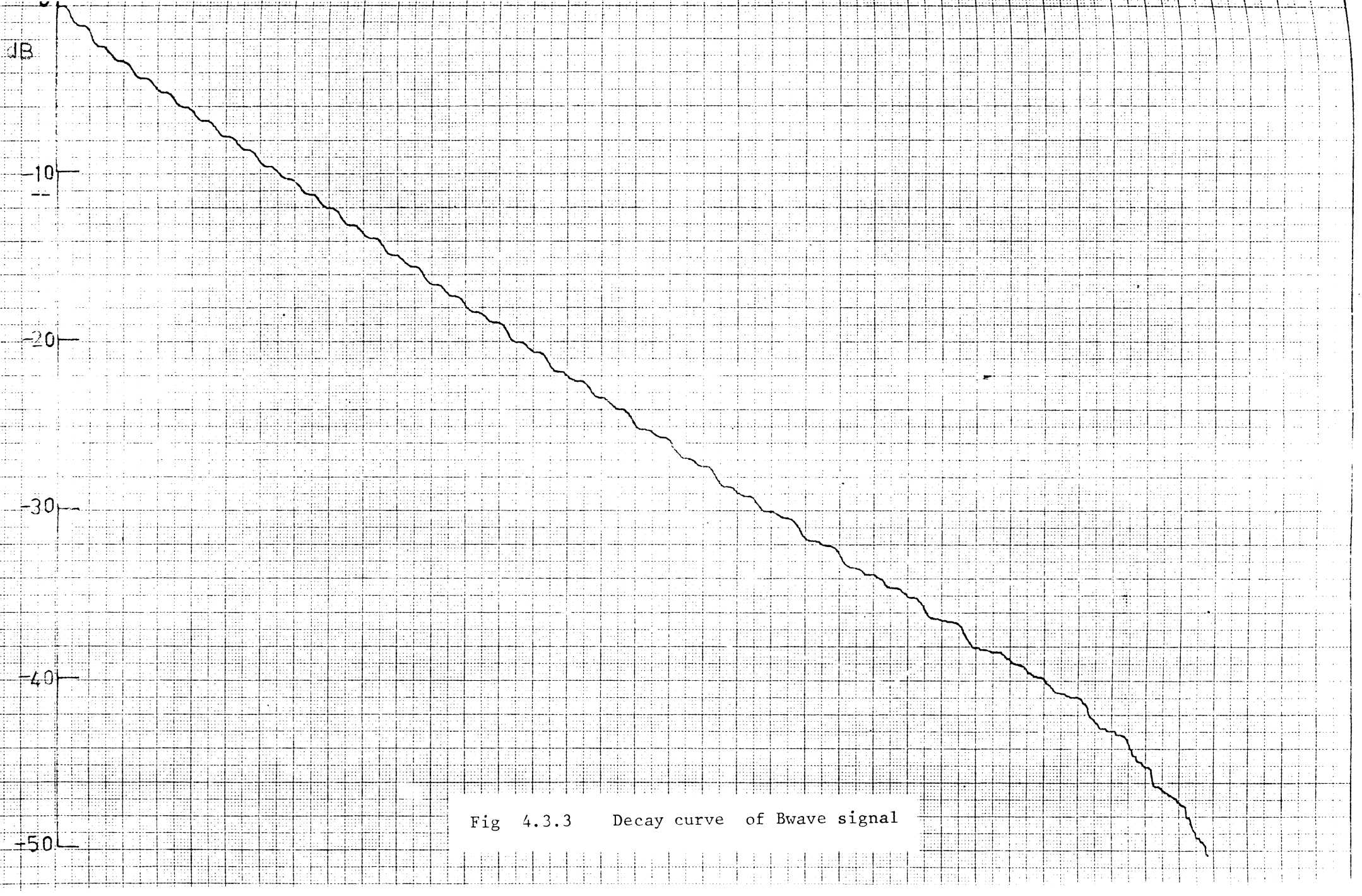

Fig 4.3.3 Decay curve of Bwave signal

5. EXPERIMENTAL WORK

5.1 Description

In order to verify the working of the LAD and to check the software accompanying the converter the converter was tested in an acoustic scale model. The high speed LAD was used to measure the EDT, IRT and RT of a 1/8th scale model of the reverberation room at the university. An electric spark source was used to excite the model. The signal was picked up by a $\frac{1}{4}$ inch condenser microphone filtered and amplified and fed into the log converter. The samples from each measurement were stored in memory then transferred to diskette and later analysed using Schroeder's Method for calculating the decay curve.

The experiment was repeated in octave intervals from 1kHz. However the results for frequencies above 63kHz were not usable due to air absorption and microphone directivity.

The decay curves were plotted directly on a plotter via two D/A converters in the acoustics rack.

The experiment was conducted in an air-conditioned environment so that the temperature and humidity were controlled. Readings of temperature and humidity were taken and used to calculate and correct for the air absorption. The correction of air absorption is discussed in section 5.5. A diagram of the experiment is given in figure 5.1.1.

5.2 The Model

The model of the reverberation was constructed 19mm chipboard with a mahogany veneer. This had been treated with a few coats of varnish to increase the high frequency reverberation. The model has been previously tested using an interrupted noise method and impulse source method (46). The results of the previous test are shown below in figure 5.2.2. The roof was removable for positioning instruments.

Day (22) found that a single coat of paint over 9mm plywood was representative of a plastered wall. Harwood and Burd (4) used a reverberation room made of smooth 13mm steel plates and simulated a plastered wall in another experiment using laminboard varnished with polyurethane. It appears that any smooth, rigid and non-porous surface will provide a reasonable similarity to a plastered wall. The full size reverberation room is shown developed in figure 5.2.1.

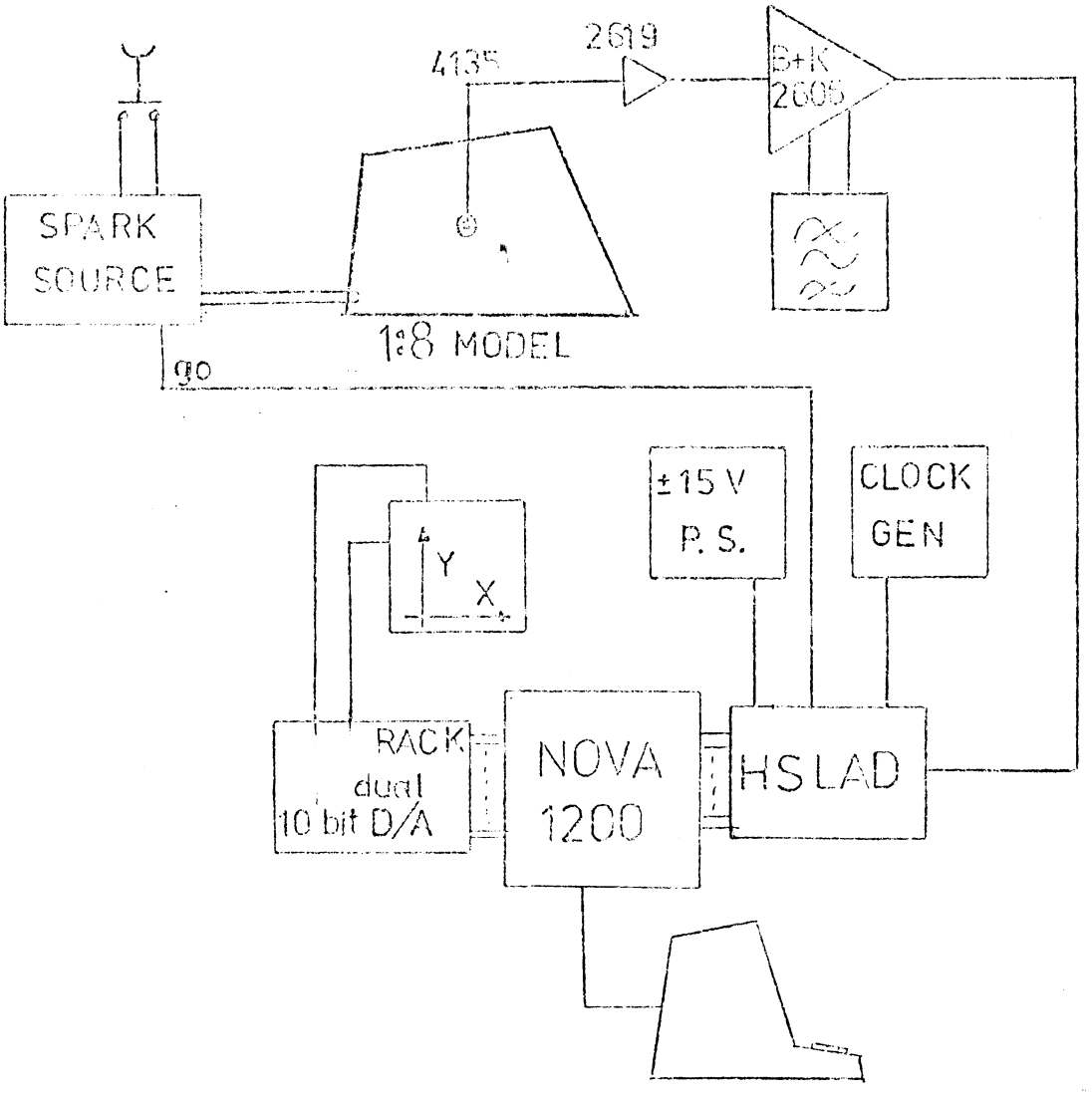

Figure 5.1.1 Experimental Setup

5.3 The Sound Source

The sound source consisted of the spark discharge of a 4 F capacitor charged to approximately 2kV. The source is described in appendix 5. The electrodes were positioned in the corner marked 'X' in figure 5.2.1 being the usual position of the loudspeaker in the full size room.

5.4 Microphone and Amplifiers

The microphone used was a B+K $\frac{1}{4}$ inch condenser with a UA0035 adapter and B+K 2619 cathode follower preamplifier and was placed in the centre of the room.

The preamp was connected to a B+K 2606 measuring amplifier which was used to scale the signal to the range of the LAD. The output of the measuring amplifier was also fed to an oscilloscope for adjusting the level of the signal. The signal was filtered using a B+K 1614 filter set connected to the measuring amplifier and has octave filters up to 125kHz and third octave filters up to 160kHz centre frequencies.

This microphone and amplifier combination gave a signal dynamic range which exceeded 50dB for the whole range under test. This is shown graphically in figs. A5.1 and A5.2 and summarised in the table below.

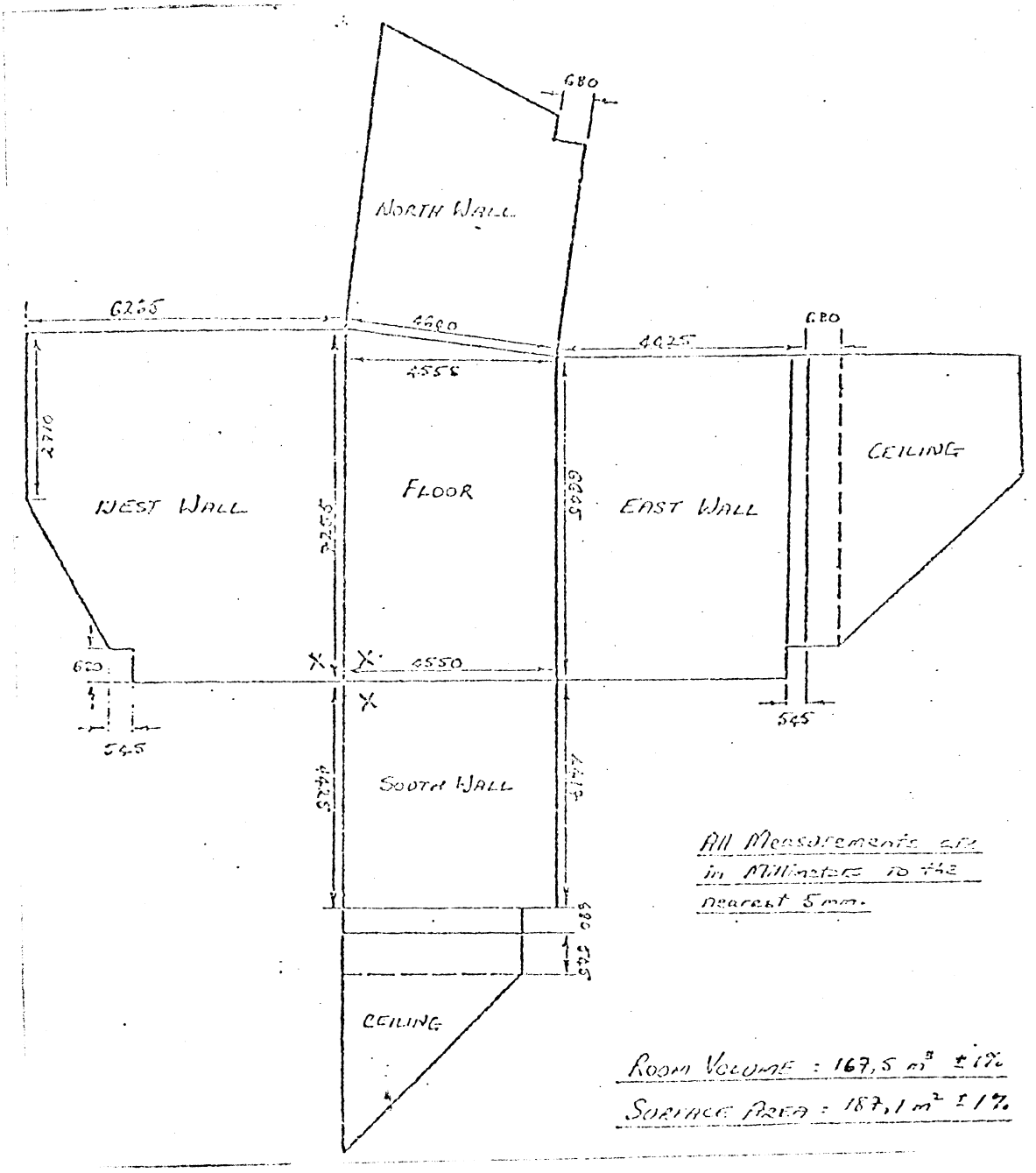

Figure 5.2.1 Developed Diagram of the Reverberation Room

Frequency kHz	Reverberation Times (RT)(msec)			
	Before Varnishing	Brush Varnishing	Spray Varnishing	Spray Varnishing (Impulse)
5,04	198	301	407	431
6,4	199	292	366	400
8,0	154	250	324	350
10,0	161	253	273	290
12,8	135	203	263	251
16,0	121	177	229	220
20,0	108	178	187	204
25,2	95	142	162	173
32,0	93	126	130	152
40,0	79	121	113	108
50,4	89	98	99	106
64,0	81	87	86	97
80,0	70	78	74	81
100,0	75	81	71	81
Dry Bulb Temperature	$80^{o}F$	$76^{o}F$	$73^{o}F$	$73^{o}F$
Wet Bulb Temperature	$60^{o}F$	$61^{o}F$	$62^{o}F$	$62^{o}F$
Relative Humidity	34%	45%	57%	57%

Figure 5.2.2 Reverberation times of 1/8th scale model (47)

Octave band	Centre frequency	1k	2k	4k	8k	16k	31,5k	63k	125k
Impulse sound source									
Output at 30cm	SPL	87	90	96	96	97	101	92	87
Microphone & amplifier noise	SPL	35,5	33	32	31,5	32,5	34	34	36
Dynamic Range	dB	51,5	57	64	64,5	65,5	68,5	58	51

Table 5.4.1 Signal and Noise Levels of Microphone and Amplifier

5.5 Air Absorption

The absorption of sound in air is normally neglected in reverberation time calculations because the effect is negligible at normal frequencies. In modelling work the effect is too large to be ignored and must be either corrected by treating the air or compensated for in the calculations. The latter method was chosen in this study.

The absorption of sound in air is due to two basic mechanisms known as classical and molecular absorption. Classical absorption arises from viscosity and heat effects in the air and cannot be controlled. It is proportional to the square of the signal frequency and so increases rapidly with frequency. Molecular absorption is due to the relaxation energy of oxygen and is catalysed by the effect of water vapour in the air. The total absorption m is given by

$$m_{total} = m_{class} + m_{mol} \qquad (5.5.1)$$

Monk (41) has proposed the following relation for molecular air absorption.

$$m_{mol} = 1,25 \times 10^{-5} \frac{f_{max}}{1 + (\frac{f_{max}}{f})^2} \qquad - (5.5.2)$$

where f is the frequency of the sound in Hz.

$$\text{and } f_{max} = 175h + 6140h \left(\frac{1,12 + h}{10,4 + h}\right) \qquad - (5.5.3)$$

and h = absolute humidity

$$= \frac{\exp (21,048 - 5328,4/(t + 273))}{760} \qquad - (5.5.4)$$

where t = temperature in ^{o}C

rh% = relative humidity in per cent.

The classical air absorption is given by

$$m_{class} = \frac{(330 + 0,2t}{10^{12}} f^2 \qquad - (5.5.5)$$

Figures calculated using these relationships have been found by Winkler (42) to agree with practical measurements.

These values can be used to correct the measured reverberation times according to Millingtons formula.

$$T_{meas} = \frac{0,163\ V}{s\bar{\alpha} + 4mV} \qquad - (5.5.6)$$

The values are then corrected for zero air absorption by

$$\frac{1}{T}_{corrected} = \frac{1}{T}_{measured} - \frac{4m}{0,163} \qquad - (5.5.7)$$

A table of values of $\frac{4m}{0,163}$ correction factors is given for various frequencies below (at the values of temperature and relative humidity actually recorded during the experiment).

frequency (kHz)	$\frac{4m}{0,163}$
1	0,0049
2	0,0172
4	0,0785
8	0,3117
16	1,212
31,5	4,292
63	13,107
125	31,445

Table 5.5.1 Correction factors for air absorption (t = 21,7°C, RH = 70%)

For values of T_R of 0,5 seconds at frequencies of 16kHz and above the correction factor exceeds 5% and increases rapidly with frequency showing the necessity for correction. At the same frequency the effect of air absorption is greatest with long reverberation times because the air is responsible for most of the absorption. This means that the effect of air absorption in modelling of auditoria etc. will be less pronounced than in this study.

5.6 Description of Software

The programming which does the integration and display of data was all done in BASIC. This language has the advantage of being easy to use and debug because it is interactive. The main disadvantage is the fact that the language only interfaces to a terminal and cannot interface to A/D converters etc. This has been overcome in a version called C5BASIC (204,205) which allows the program to have assembly language subroutines and to transfer data between the program and the subroutines. A fuller description of the C5BASIC package is given in Appendix 2.

The package also allows for data to be stored on diskette but this part of the package was not used as the package and data would need to memory at the same time as the data. Instead the data was stored using the IMAGE command of the DDOS and special call drivers (assembler subroutines) were written to access the data from the binary files on diskette. This allowed all the memory except the DOS resident area to be used for data.
The IMAGE command is normally used to store binary programs on diskette. It stores a binary image of the data in a binary file on the diskette. The IMAGE command is discussed in section 5.6.3 and the IMAGE file format is discussed in section 5.6.4.

The call drivers are called from C5BASIC using the CALL command. The format of the command is

NNN CALL "NAME", P1, P2, P3 ....

where NNN is the line number of the BASIC program.

"NAME" is the driver name enclosed in inverted commas.

P1, P2, P3 are parameters passed to and from the driver.

The call drivers are linked to a standard package of drivers and appended to the BASIC interpreter. So in order to do other integral square or even correlation measurements it is only necessary to change the BASIC program and not any of the call drivers. Below is a description of the BASIC program called "LADEXER" and the call drivers it uses. Listings are in Appendix 3.

5.6.1 LADEXER Program

All the software used in the experiment was incorporated into one BASIC program incorporating a number of call drivers. The program operates in a dialogue between the computer and user and executes in the form of a menu of subroutines as shown in the flowchart figure 5.6.1.

The call drivers contain some common data and therefore are interactive. The main connecting link is the data file pointer. This pointer is left at the last point + 1 after execution of the call driver but can be reset by calling option number three at any stage. This feature was found to be useful when plotting data or results as it enabled suitable breakpoints to be inserted. The various subroutines and notes on their use are described in the following sections.

5.6.2 Map of Core

This program uses call driver "CORMAP" and fetches the following values from DDOS.

1) First storage word available above BASIC program.

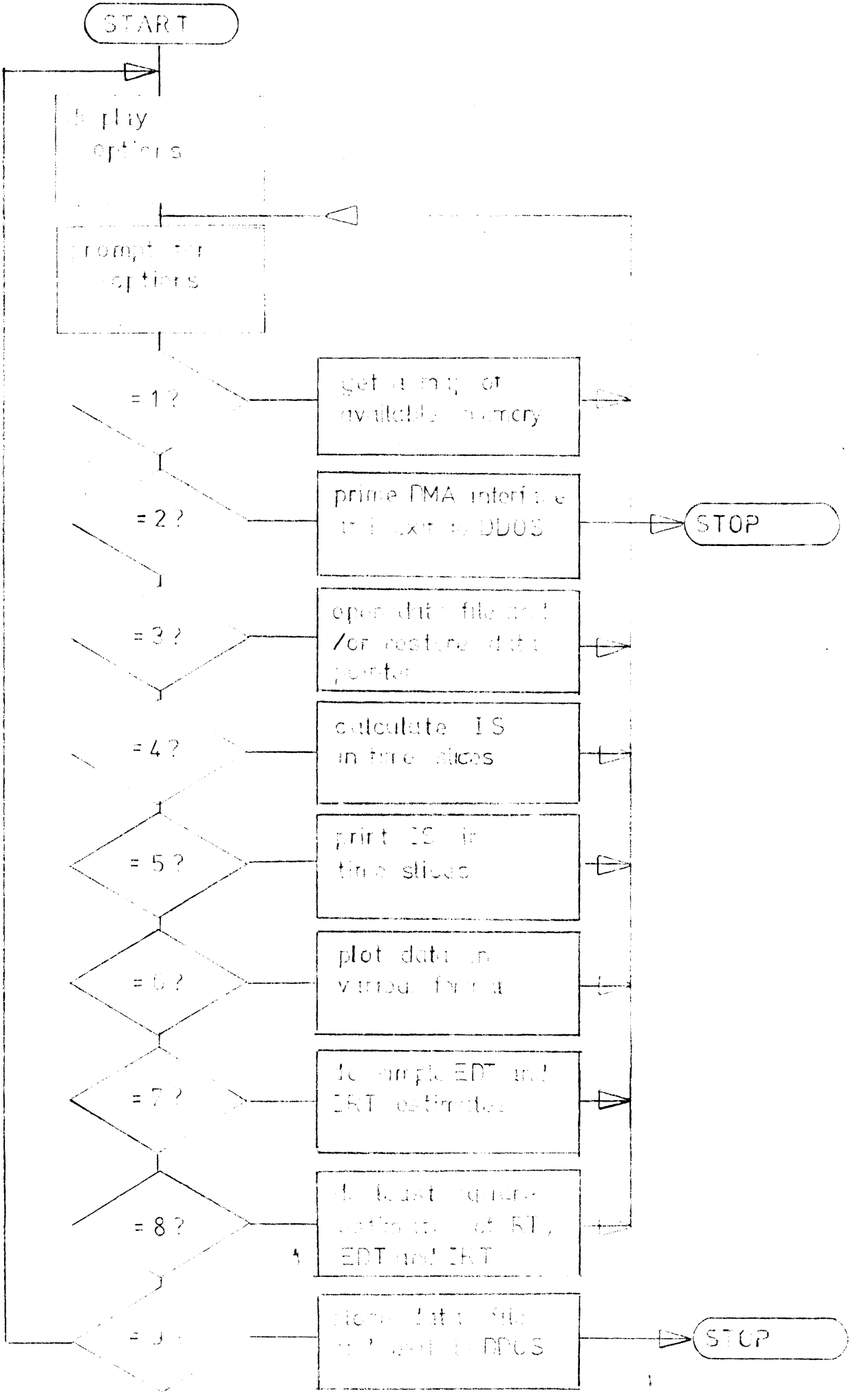

Figure 5.6.1 Flowchart of LADEXER program

2) Number of protected words at the top of core (operating system).

3) Size of core.

From these values the program determines the maximum data storage area available 1) if the BASIC program is not overwritten and 2) if all available core, with the exception of the operating system, is used. This subroutine uses the pseudo function GETC to fetch the system parameters. This is supplied in the C5BASIC package. Since the program LADEXER currently only calculates RT, EDT, IRT it is likely that this program would be extended to cater for other criteria. If the program is altered at any stage the driver "CORMAP" will use the changed length of the program and adjust the area available for data storage.

5.6.3 Prime Interface and Exit to DDOS

The DMA interface has two counters, the address counter and the block size counter. The address counter must be loaded with the first address at which data will be stored (normally just above the program itself). The block size counter must be loaded with the number of words to be stored. This is half the number of samples taken because the data is packed two samples per word by the interface prior to transfer. This subroutine calls for values of start address and number of words from BASIC. No checking is done on the legality of these values and the user is recommended to use the values given in the map of core above or fewer samples.

The routine then primes the controller with these values. The format of the IMAGE command is

IMAGE (filename, start address, end address)

where filename is the name of the datafile e.g. DATA

start address is the start address of data in octal

end address is the end address of data in octal.

It is inconvenient that these addresses are in octal as all other numbers are decimal so the program computes these octal values based on the values of start address and number of words entered above in decimal. These values are then displayed in the format of the IMAGE command so that all the user has to do is copy the sample command displayed on the screen.

Having completed this the routine returns to DDOS since the next operation in the experiment is to take the samples with the LAD. After the samples have been taken and IMAGE'd onto diskette the user can either just restart or recall the LADEXER program and analyse the data or prepare more data.

5.6.4 Open Data File and Restore Pointer

This routine opens the file DATA which was created and filled by IMAGE and resets pointer to the first sector. This routine can be used to reset the pointer at any stage in the experiment.

The normal file storage facilities in C5BASIC were not used as their data format was not compatible with IMAGE and would also have required both C5BASIC and a BASIC programme to be present in core taking up storage space. The format of a data file stored with the IMAGE command is as follows:

BYTE 1	high order number of data bytes in file
BYTE 2	low order number of data bytes in file
BYTE 3	space (32)
BYTE 4	null (Ø)
BYTE 5	same as byte 1
BYTE 6	same as byte 2
BYTE 7	first data byte
BYTE N + 6	last data byte
BYTE N + 7	null
BYTE N + 8	null
BYTE N + 9	128
BYTE N + 10	null

The command to open the data file DATA will open the file and bump the pointer over the header so that it points at the first data byte, and returns the number of data bytes in the file (note: excluding header and trailer bytes).

5.6.5 Calculate Integral Square of Data

This routine integrates the data values according to the table look-up method and stores the accumulating integral at various points along the way. Up to 1024 such values may be stored. These values are then used together with the final integral to determine the decay values according to Schroëders method. Note: After completing the integral square the data pointer is left at its current value.

5.6.6 Print

This routine is primarily used for testing purposes and can print either

1) sampled data (values between -18 and +18)
2) values of the accumulating integral square
3) decay values in dB.

The routine leaves the data pointer at its current position on completion. This has two advantages

1) It enables more than 1024 values to be handled simply by recalling the routine (C5BASIC limits the size of an array to 4 x 256).
2) It enables the user to position the pointer at any position and continue from there.

5.6.7 Plot

This routine plots either the data values themselves scaled in 3dB increments - for reconstruction of the signal, or the decay values enabling a reverberation decay to be plotted. The time scale may be varied by changing the number of samples per integral (variable A1) in the routine which calculates the integral totals.

The routine will also plot the axis marking off values at 10dB intervals.

A calibration program for the plotter was written and drew full scale rectangles on the paper allowing the plotter to be calibrated. This program was called "PLOTSETAID" and used the call driver "XYPLOT" which may also be called in keyboard mode to check the plotter settings.

5.6.8 EDT and IRT Estimates

This routine calculates the time taken for a 10dB signal decay (EDT) or 15dB (IRT). The routines do not do a least squares fit on the data but merely calculate the value as a straight line between two points. For a more accurate estimate the least squares calculation was used. Since the first bit of the decay can still be a process of sound buildup the starting point of the value can be varied in the program i.e. to start only from 1dB or 1,5dB below zero. In the actual experiment this was not found to be necessary. This is probably due to the very short duration of the sound excitation impulse.

5.6.9 Least Squares Fit

This routine will fit the best straight line using a least squares regression to a section of the decay curve. This routine can therefore be used to calculate least squares estimates of EDT and IRT values and is the preferred method. All the values quoted in this report are least squares estimates over the given range.

5.6.10 Close data file and exit to DDOS

This is the correct way to exit the program as it first closes all files before returning to DDOS. Merely halting the machine at the end of the experiment can result in a file becoming permanently opened and hence inaccessible.

5.7 Experimental Results

The experimental results are shown in table 5.7.1. This shows 3 readings taken at each octave frequency. The values of EDT, IRT and RT were evaluated using least squares regresssion. Since the reverberation decay was less than 60dB the RT was estimated over 25dB of the decay.

The temperature and relative humidity were recorded for calculation and correction of air absorption on the reverberation time.

The corrected values of EDT, IRT and RT are shown in table 5.7.3 and are plotted on a graph in figure 5.7.1. Also plotted on the same axes are measurements done by the author previously in the full size room (44) and those by Richards (45) using a level recorder and interrupted noise source in the same room. The results for the model were scaled up by a factor 8 and the frequencies scaled down on the graph for comparision with the measurements done in the full size room.

The results show a good correlation between the values of RT obtained with those obtained previously for the model and also with the scaled times from the full size room. The reason for the discrepancy with the results of RICHARD'S (45) may be due to his using a visual estimate of the slope of the decay curve.

5.8 Absorption Coefficient Measurement

The absorption coefficient of the surface of the reverberation room model can be calculated from Millingtons formula for reverberation time (5.5.6) to give

$$\overline{\alpha} = \frac{V}{S}\left(\frac{0,163}{T} - 4m\right) \qquad - (5.8.1)$$

foct (kHz)	(kHz)	EDT (10dB)	IRT (15dB)	RT (25dB)
1	19,97	0,371	0,418	0,455
		0,372	0,418	0,449
		0,361	0,421	0,457
2	19,97	0,352	0,365	0,444
		0,358	0,371	0,458
		0,350	0,365	0,444
4	49,96	0,371	0,399	0,469
		0,381	0,403	0,496
		0,396	0,408	0,500
8	49,96	0,359	0,369	0,386
		0,358	0,372	0,391
		0,360	0,371	0,397
16	100,08	0,242	0,230	0,254
		0,241	0,231	0,250
		0,244	0,237	0,255
31,5	200,1	0,136	0,121	0,125
		0,133	0,121	0,124
		0,134	0,122	0,125
63	199,8	0,0551	0,0601	0,0608
		0,0563	0,0614	0,0604
		0,0547	0,0597	0,0615

temperature 21,7°C

relative humidity 70%

Table 5.7.1 Uncorrected Reverberation Times

frequency (kHz)	m (total) (m)	m (mol) (m)	m (class) (m)
1	0,0002	0,0002	0,0000
2	0,0007	0,0006	0,0001
4	0,0032	0,0026	0,0006
8	0,0127	0,0103	0,0024
16	0,0494	0,0398	0,0096
31,5	0,1749	0,1397	0,0370
63	0,5341	0,3859	0,1482
125	1,2814	0,6981	0,5833
40	0,2644	0,2044	0,0597
80	0,7386	0,4997	0,2389

Table 5.7.2 Values of Total air absorption at various frequencies

	EDT	IRT	RT
foct	10dB	15dB	25dB
1kHz	0,372	0,419	0,456
	0,373	0,418	0,450
	0,361	0,422	0,458
2kHz	0,354	0,367	0,447
	0,360	0,374	0,462
	0,353	0,368	0,447
4kHz	0,382	0,412	0,486
	0,393	0,416	0,516
	0,409	0,421	0,521
8kHz	0,404	0,418	0,439
	0,404	0,420	0,445
	0,405	0,420	0,453
16kHz	0,343	0,319	0,366
	0,341	0,321	0,359
	0,346	0,332	0,368
31,5kHz	0,325	0,252	0,269
	0,309	0,251	0,265
	0,317	0,256	0,269
63kHz	0,198	0,284	0,300
	0,215	0,314	0,291
	0,194	0,275	0,317

Table 5.7.3 EDT, IRT, & RT values corrected for air absorption

This formula was used to calculate the absorption coefficient where T is the reverberation time actually measured and m is the total air absorption. The resulting figures are plotted together with figures obtained by Day (22) for varnished 9mm plywood in figure 5.8.1.

The results show a good correltation with Day's results except at approximately 3kHz. However the peak in Day's curve is most likely due to a peculiarity in the surface or porosity of Day's plywood. The results, when scaled, also correspond well with the absorption coefficients for a plastered wall from Parkin & Humphreys (49).

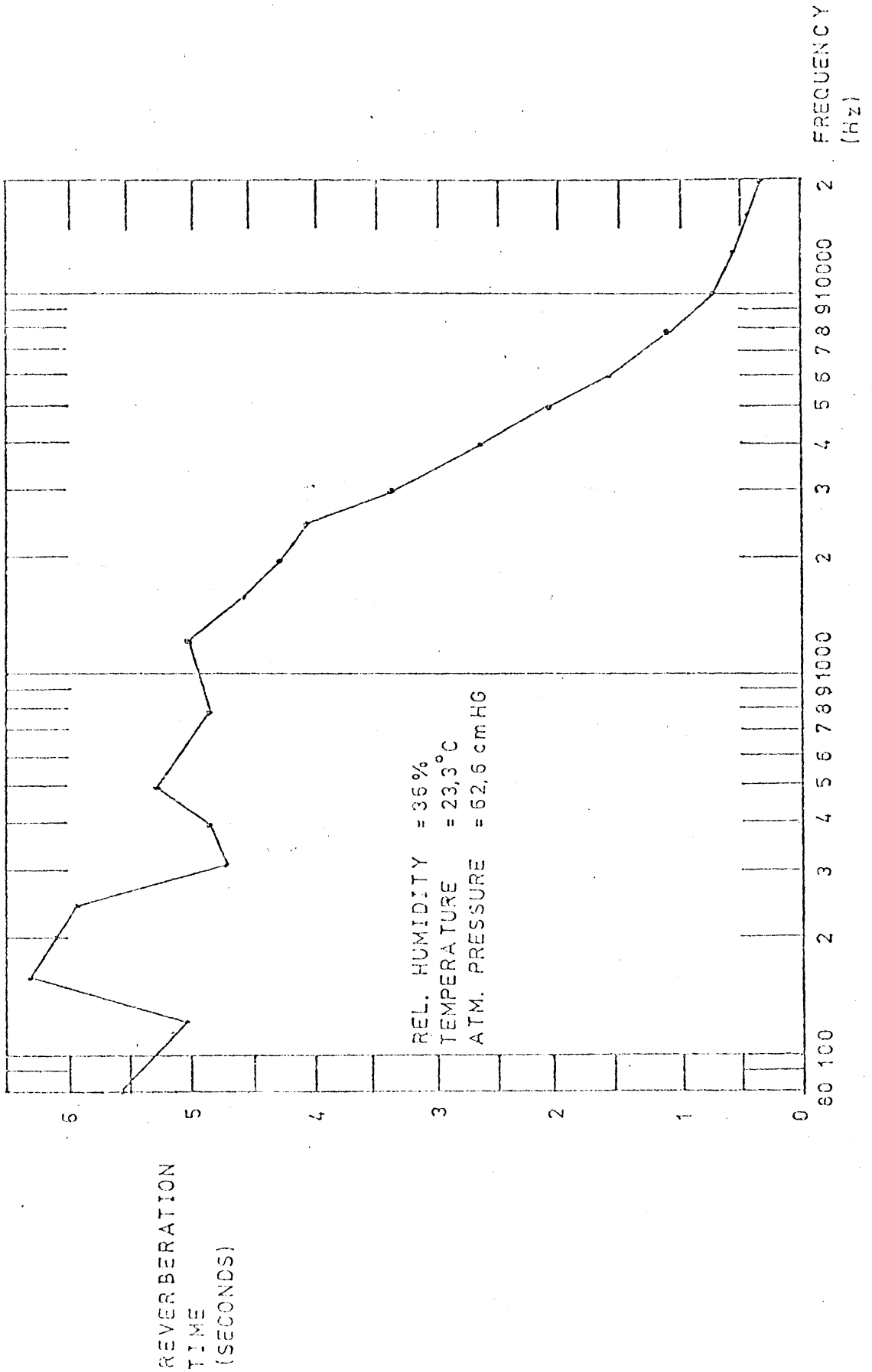

Figure 5.5 Graph of Reverberation Time Vs Frequency (45)

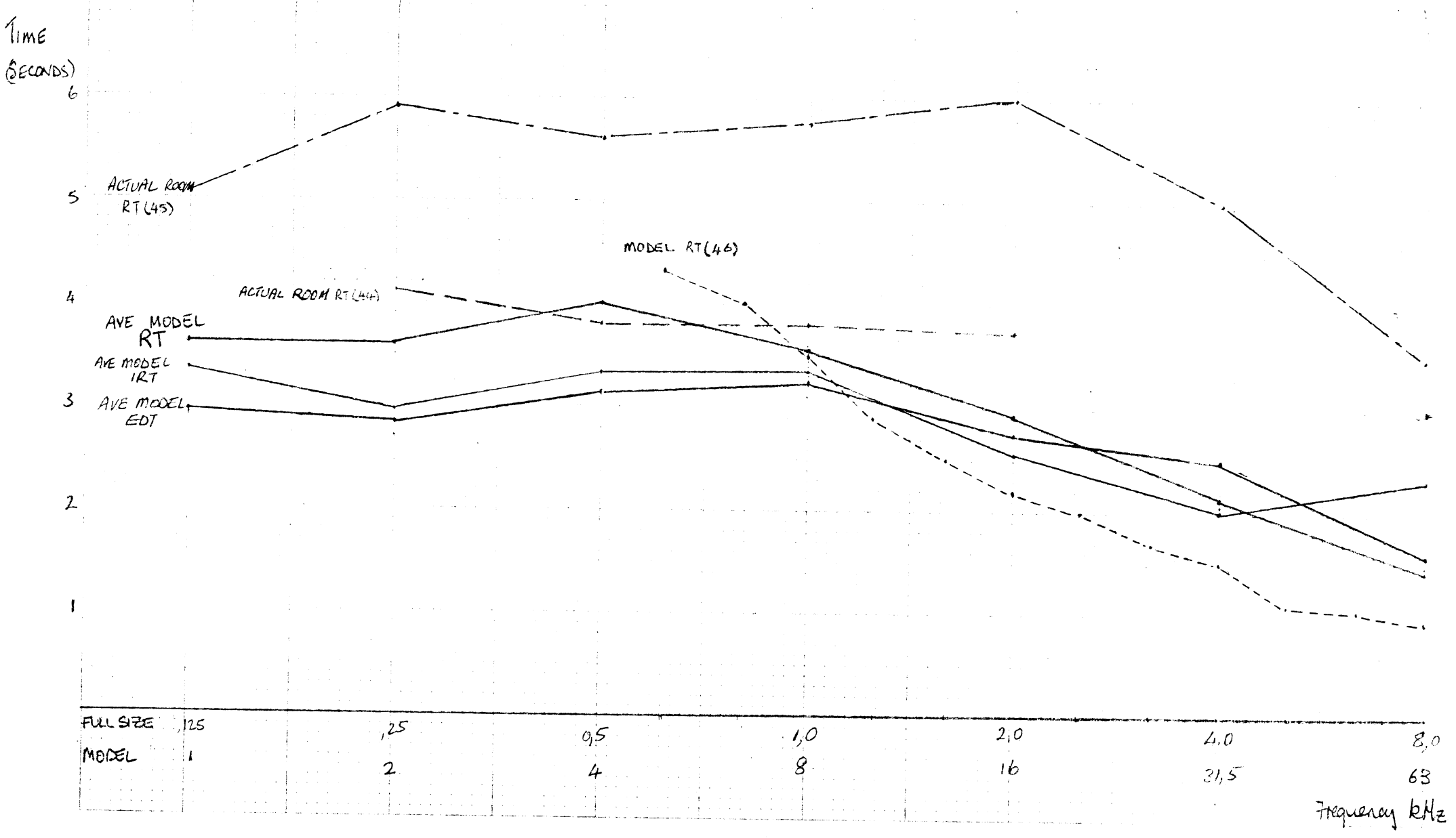

Figure 5.7.1 Comparison of model measurements and full size room

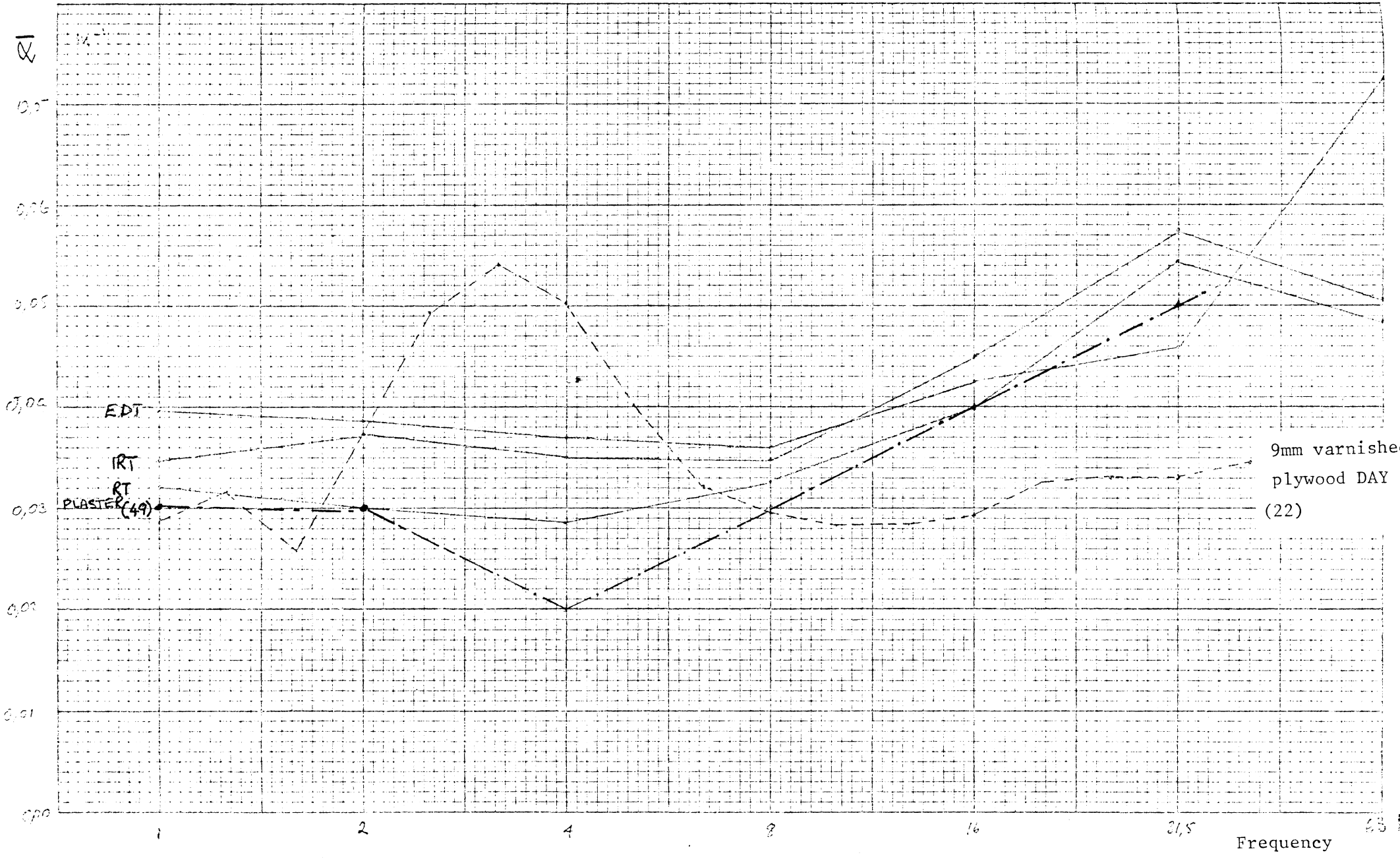

Figure 5.8.1 Absorption coefficient of model wall surface vs frequency

6. DISCUSSION OF RESULTS

6.1 Performance of LAD

The LAD designed performed well in tests using sine and square wave inputs and with a total conversion time of 2,5 microseconds can be used at sampling rates up to 400kHz which far exceeds the requirement for modelling work.

The noise level in the converter was higher than predicted and resulted in errors at the lowest threshold of the converter. This was due to the noise of the computer circuitry in close proximity with the converter. If it is necessary to improve the dynamic range of the converter it will be necessary to remove the converter from the computer. Further shielding of the converter within the frame of the computer is not feasible.

Since the LAD was designed for acoustic modelling work, most of the signals used with it would have a gaussian or similar amplitude distribution. A typical signal would be a white noise source or an electric spark impulse sound source. It is difficult to test the LAD using these signals as they are not deterministic and cannot be repeated. For this reason the LAD was tested using the bwave or decaying sinusoid. Figs. 4.3.2 and 4.3.3 show the reconstruction of the bwave and the corresponding decay curve. This is an end to end test for the LAD and the results show that it performed well. The length of the straightline portion of the decay has been shown to be an indication of the dynamic range of the signal (41) and this exceeds 45dB for the bwave signal.

6.2 Decay Curves

The decay curves shown in Appendix 1 were plotted on A3 paper and reduced. The time length of each sample was varied by varying the number of samples per data point in the decay. Each decay represents 1000 data points, so by varying the 'number of samples per integral' the decay plots were arranged to fill the page.

Each page shows three different events superimposed on each other. Due to triggering differences there are time shifts between the decays but disregarding these the decays are highly repeatable. This means that the fluctuations in the decay are not due to the randomness of the signal or errors in conversion but to the properties of the room. The length of the straight line portion of the decay is at all times in excess of 30dB which is as good or better than was obtained previously using

a slower speed LAD in the full size reverberation room (44) and is similar to results obtained by Gerlach (15) using a taped response and slower analysis.

A fall-off in the repeatability of the decays can be seen at higher frequencies but this is within tolerance up to 63kHz. The stepped nature of the higher frequency decays cannot be explained without further testing but could be due to one or more of the following:

1) the directionality of the microphone at higher frequencies;
2) air absorption;
3) interference from the sound source.

In a further study it would be possible to isolate the cause of the stepping in the decays by varying the microphone position, flushing with nitrogen and shielding the sound source with a gauze cage.

The results for 125kHz were not considered usable for reverberation calculations due to the stepped nature, but still were repeatable.

6.3 Reverberation Time Measurements

In view of the fact that increasing importance is being placed on the early part of the decay values of EDT and IRT were calculated as well as those of RT. The reverberation times (RT) were calculated over the first 25dB of the decay throughout the experiment. It is possible to estimate the reverberation time over a longer section of the decay in most cases but a uniform figure was decided on.

When compared with previous measurements of reverberation time in the full size room there is a reasonable correlation. Brebeck (3) has stated that differences in reverberation time varying from 8 to 20% are inaudible so that the model represents the room as measured by the author previously. The times also agree very well with those of Robson (47) in a previous test of the same model as used in this test. The times quoted by Richards (46) were done using the interrupted noise decay and were measured manually from the chart recordings. The errors in that test were therefore a lot greater and would probably account for the high values obtained.

6.4 Absorption Coefficient Measurements

The absorption coefficients of the wall surfaces of the model reverberation room agree well with those determined by Day (22) and correspond well

with the values of absorption coefficient for a plastered wall surface (49). The determination of a variety of absorption coefficients of modelled surfaces can be made easily in the reverberation room model and calculated from the empty reverberation room time as

$$S_1(\alpha_1 - \bar{\alpha}) = \frac{1}{T_1} - \frac{1}{T_e} \qquad - (6.1)$$

Note that (6.1) involves the subtraction of the two reverberation times of the empty room (T_e) and the room with a sample of area S_1 with coefficient α_1. In order to reduce the error of subtracting significance, the area of the sample should be as large as possible. In model work it is often feasible to treat the entire surface of the model interior, giving very much more accurate results. This was done by Day (22) for reflective surfaces because the differences in reverberation time are small and is recommended in all model work.

7. CONCLUSIONS AND SUGGESTIONS

7.1 Conclusions

With the design of the LAD the range of digital acoustic measurements has now been extended up to the limit of available transducers, the limiting factor now being the microphone.

The use of a statistical averaging technique combined with that of logarithmic quantisation and a computer interface has provided an acoustic measuring technique with high accuracy and repeatability even at the high frequencies required for modelling as well as the versatility to be able to calculate a variety of criteria from a single measurement.

Although the system was shown only using the criteria of EDT, IRT and RT, the addition of other criteria are simple. They require only that additional programming is done in BASIC as all the impulse integrating software has been written and included in the package PACK and are available for use in other BASIC programs (see Appendix 2).

The results of the decay curves show that the modelling technique gives a good correlation with results in a full size room when corrected for air absorption and is therefore a useful design tool.

7.2 Suggestions for further work

The extension of this measuring technique up to acoustic modelling frequencies now opens the way for further work in modelling. In particular the following studies would be useful:

1) Study of air absorption - With the increased accuracy afforded by this method, more accurate tables of air absorption could be drawn up enabling better high frequency modelling.
2) Extension of the software to include other early energy and clarity indices - This study would enable a comparative study of the usefulness and application to modelling of each of the indices to be done.
3) Measurement of microphone directivity and its effect on reverberation calculations - As this appears to be the cause for the stepped nature of the decays it may be possible to reduce its effect by rotating the microphone about its position and combining the results.
4) The use of a nitrogen atmosphere - This study would show whether the extra effort of reducing air absorption is actually required.
5) A study of diffuser placement in the reverberation room - This study would enable the study of a number of diffuser positions to be studied at low cost and in short time.

6. Comparative library of absorbent materials - Before any design work is tackled it is necessary to build up a library substances which effectively model various wall and floor treatments.

7. Modified interface for long event times - Although unlikely it may be necessary to measure longer reverberation times than the memory capacity permits. This can be accommodated by modifying the interface as follows.

   i) Change data channel mode to increment memory instead of transfer to memory.
   ii) Use data bits as lower five address bits.
   iii) Page up the more significant bits for each point required on the integration curve.

   This is effectively doing some of the integration in hardware and so will only allow integral square measurements and will also require software modifications.

BIBLIOGRAPHY

Acoustics

1. SPANDOCK, F. 'Akustische Modellversuche'. Ann Physik, 20, 1934 pp 345-360.

2. SPANDOCK, F. 'Die Verausbestimmung der Akustik eines Raumes mit Hilfe von Modelversuchen'. 5e Congres International d'Acoustique, 1965, pp 313-345.

3. BREBECK, D. 'Die Schall und Ultraschallabsorption von Materialen in Theorie und Praxis, insbesondere im Hinblick auf den Bau akustich aknlicher Modelle in Massstab 1 : 10'. PhD dissertation, University of Munich, Germany.

4. HARWOOD, H.D. and BURD, A.N. 'Acoustic Scaling of Studios and Concert Halls' Acustica, 28, 1973, pp 330-340.

5. BREBECK et al 'Akustisch anlich MOdelle als Hilfsmittel für die Raumakustik'. Acustica, 18, 1967, pp 213-226.

6. ISHII, K. and TACHIBANA, H. 'Acoustic scale model experiment using medium of nitrogen gas', 8th International Congress on Acoustics, LONDON, 1974.

7. HEGVOLD, L.W. 'A 1: 8 Scale Model Auditor'. Applied Acoustics, 4, 1971, pp 237-256.

8. LOCHNER, J.P. and BURGER, J.F. 'Pulse Tests in Acoustics Models', 4th International Congress on Acoustics, 1962, paper M13.

9. LOCHNER, J.P.A. and BURGER, J.F. 'The Influence of Reflections on Auditorium Acoustics'. Journal of Sound and Vibration, 1, 1964, pp 426-454.

10. LYON, R.H. and CANN, R.G. 'An Acoustical Modelling System for Site Evaluation. Massachussetts Institute of Technology, June 1974.

11. VENEKLASEN, P.S. 'Model Techniques in Architectural Acoustics'. Journal of the Acoustical Society of America, 47, 1970, pp 419-423.

12. DELANY, M.E. and RENNIE, A.J. 'Scale model Techniques and their use in Predicting Transportation Noise', 8th International Congress on Acoustics, LONDON, 1974.

13. KNUDSEN, V.O. and PLANE, V.C. 'Model Studies of Effects on Motor Vehicle noise of shapes and arrangements of structures along urban streets and highways', 8th International Congress on Acoustics, LONDON, 1974.

14. NELSON, P.A. and KOOPMANN, G.H. 'Model studies of the effects of V-form ceilings on the acoustics of open plan offices'. Journal of Sound and Vibration, 50(3), 1977, pp 455-468.

15. GERLACH, R. 'The Reverberation Process as Markoff Chain - Theory and Initial Model Experiments'. Auditorium Acoustics, ed. Mackenzie, R. Applied Science Publishers, 1975, pp 101-114

16. JORDAN, V.L. 'Model Studies with Particular Reference to the Sydney Opera House - the Evaluation of Objective Tests of Acoustics of Models and Halls'. Auditorium Acoustics, ed. Mackenzie, R. Applied Science Publishers, 1975, pp 55-72.

17. JORDAN, V.L. 'Acoustical Criteria for Auditoriums and their Relation to Model Techniques'. Journal of the Acoustical Society of America, 47, 1970, pp 408-412.

18. KNUDSEN, V.O. 'Model Testing of Auditoriums'. Journal of the Acoustical Society of America, 47, 1970, pp 401-407.

19. JORDAN, V.L. 'Auditoria Acoustics : Development in Recent Years'. Applied Acoustics, 8, 1975, pp 217-235.

20. WATTERS, B.G. 'Instrumentation for Acoustic Modelling'. Journal of the Acoustical Society of America, 47, 1970, pp 413-418.

21. BURD, A.N. 'Acoustic Modelling - Design Tool or Research Project?' Auditorium Acoustics, ed. Mackenzie, R., Applied Science Publishers, 1975, pp 73-85.

22. DAY, B. 'Acoustic Scale Modelling Materials'. Auditorium Acoustics, ed. Mackenzie, R., Applied Science Publishers, 1975, pp 87-99.

23. NEWMAN, P. 'The Influence upon Auditorium Reverberation Time Caused by Different Positioning of Absorption within the Fly Tower.' Auditorium Acoustics, ed. Mackenzie, R., applied Science Publishers, 1975, pp 115-118.

24. SCHROEDER, M.R. 'New Method of Measuring Reverberation Time'. Journal of the Acoustical Society of America, 37, 1965, pp 409-412.

25. KUTTRUFF, H. and JUSOFIE, M.J. 'Nachhall messungen nach dem verfahren der intergrierten impulsanwort', Acustica, 19, 1967/8, pp 56-58.

26. ATAL, B.S., SCHROEDER, M.R. and SESSLER, G.M. 'Subjective Reverberation Time and its Relation to Sound Decay'. 5th International Congress on Acoustics, LIEGE, 1965, vol. 1B, paper G32.

27. SCHROEDER, M.R. 'Complimentarity of Sound Buildup and Decay', Journal of the Acoustical Society of America, 40, 1966, pp 549-551.

28. HAAS, H. 'Uber den Einfluss eines Einfachechos auf die Horsamkeit von Sprache', Acustica, 1(2), 1951, pp 49-58.

29. THIELE, R. 'Richtungsverteilung und Zeitfolge der Schallrückwürfe in Raümen'. Acustica, 3, 1953, pp 291-302.

30. NIESE, H. Nachrichtentechnik, 6, 1956, p545.
Acustica, 10, 1960, p394.

31. LOCHNER, J.P.A. and BURGER, J.F. 'The Subjective masking of short time delayed echoes by their primary sounds and their contribution to the intelligibility of speech'. Acustica, 8(1), 1958, pp 1-10.

32. LOCHNER, J.P.A. and BURGER, J.F. 'The Intelligibility of Speech under Reverberant Conditions'. Acustica, 11, 1961, pp 195-200.

33. BERANEK, LL and SCHULTZ, T.J. 'Some Recent Experiences in the Design and Testing of Concert Halls with Suspended Panel Arrays', Acustica, 15, pp 307-316, 1965.

34. REICHARDT, W. 'Vergleich der objektiven raumakustischen Kriterien für Musik'. Hochfrequenztechnik und Elektroakustik, 79, 1970, p121.

35. WEST, J.E. 'Possible subjective significance of the ratio of height to width of concert hall'. Journal of the Acoustical Society of America, 40, 1966, p1245.

36. MARSHALL, A.H. 'A note on the importance of room cross-section in concert halls'. Journal of Sound & Vibration, 5, 1967, p100.

37. MARSHALL, A.H. 'Levels of reflection masking in concert halls', Journal of Sound and Vibration, 7, 1968, p116.

38. MARSHALL, A.H. 'Concert hall shapes for minimum masking of lateral reflections'. Proceedings of 6th International Congress on Acoustics, 1968, vol. III section E, p49.

39. KEETS, W. DE V. 'The influence of early reflection on the spatial impression'. Proceedings of 6th Internalional Congress on Acoustics, 1968, vol. III, section E, p53.

40. BARRON, M. 'The subjective effects of first reflections in concert halls'. Journal of Sound and Vibration, 15, 1971, p475.

41. KURER, R and KURZE, U 'Integrationsverfahren zur nachhallanswertung' Acustica, 19, p313-322, 1967/1968.

42. MONK, R.G. 'Thermal relaxation in humid air', Journal of the Acoustical Society of America, 46, pp580-586, 1969.

43. WINKLER, H.'Hochfrequenztechnik und Elektoakustik', 73, 1964, p121-131.

44. HARRIS, C.M. 'Absorption of Sound in Air versus Humidity and Temperature'. Journal of the Acoustical Society of America, 40, 1966, no. 1, pp148-159.

45. RYAN, K. 'A Reverberation Study using Schroëder's Method'. B.Sc. Thesis, 1975, Dept. of Electrical Engineering, University of the Witwatersrand.

46. RICHARDS, K.G. 'An Experimental Study of a Reverberation Room.' B.Sc. Thesis 1973, Department of Electrical Engineering, University of the Witwatersrand.

47. ROBSON, H.V. 'Aspects of acoustic modelling techniques' B.Sc. Thesis 1975, Department of Electrical Engineering, University of the Witwatersrand.

48. KUTTRUFF, H. 'Room Acoustics' Applied Science publishers, 1st Ed. p87-89.

49. PARKIN, P.H. and HUMPHREYS 'Acoustics Noise and Buildings' Faber & Faber, 1969, Appendix A.

Signal Processing

101. HANRAHAN, H.E. 'The principles and error characteristics of a technique for determining the time averages of amplitude quantised time sampled sequences'. PhD Thesis, University of the Witwatersrand, Johannesburg 1969.

102. HANRAHAN, H.E. 'New results for time averages as statistical averages.' Electronic Letters, 1968, 4, pp 34-35.

103. HANRAHAN, H.E. 'Time averaging of measurement data which has been logarithmically quantised'. IEE Conference on "The Use of Digital Computers in Measurement". York 1973, IEE Conference Publication No. 103, pp 120-124.

104. HANRAHAN, H.E. 'The Wits Acoustics Laboratory Data Acquisition and Control System. Report 1976, University of Witwatersrand, Johannesburg.

105. HANRAHAN, H.E. 'Measurement of mean square sound pressure and other time averages by means of logarithmic analogue to digital converters and digital computation'. Research Report, January 1977. University of the Witwatersrand, Johannesburg.

106. LEVIN, D.C. 'Time and Space Averaging in a Reverberation Room'. M.Sc. Thesis University of Witwatersrand. September 1978.

107. PAPOULIS, A. 'Limits on Bandlimited Signals'. Procedures of the IEEE, 55, 10, 1967, pp 1677-1686.

108. LEE, Y.W. Statistical Theory of Communication. Wiley 1960.

109. NEWLAND, D.E. An Introduction to Random Vibrations and Spectral Analysis. Longman. 1975.

Computer System

201. Data General Corporation. Programmes Manual for Nova Computers Mass. U.S.A.

202. Data General Corporation. Program. Single User Basic. Mass. U.S.A. 1970.

203. Ball Computer Products. DDOS 1.6 Programmes reference manual, 1974 U.S.A.

204. GORDON, M. BASIC 'Call' Package Programmer's Manual. Version 5.

205. GORDON, M. BASIC 'Call' Package Users Manual. Version 5.

Converter Electronics

301. CANTARANO, S. and PALLOTTINO, G.V. 'Logarithmic Analog-to-Digital Converters : A Survey'. IEEE Trans. on Instrumentation and Measurement, vol. IM-22, No. 3, September 1973.

302. Precision Monolithics - CMP-01 Data Sheet. December 1971 Calif. U.S.A.

303. Precision Monolithics - REF-01 Data Sheet. January 1976 Calif. U.S.A.

304. Analogic - MP 270 - Very high speed Sample and Hold Amplifier, 1976, Mass. U.S.A.

305. DUKE, E.J. - RC Logarithmic analog-to-digital (LAD) Conversion, IEEE Trans., 1972, IM-20, 74 - 76.

APPENDIX 1

Reverberation decay plots of reverberation room model at various octave frequencies up to 125kHz.

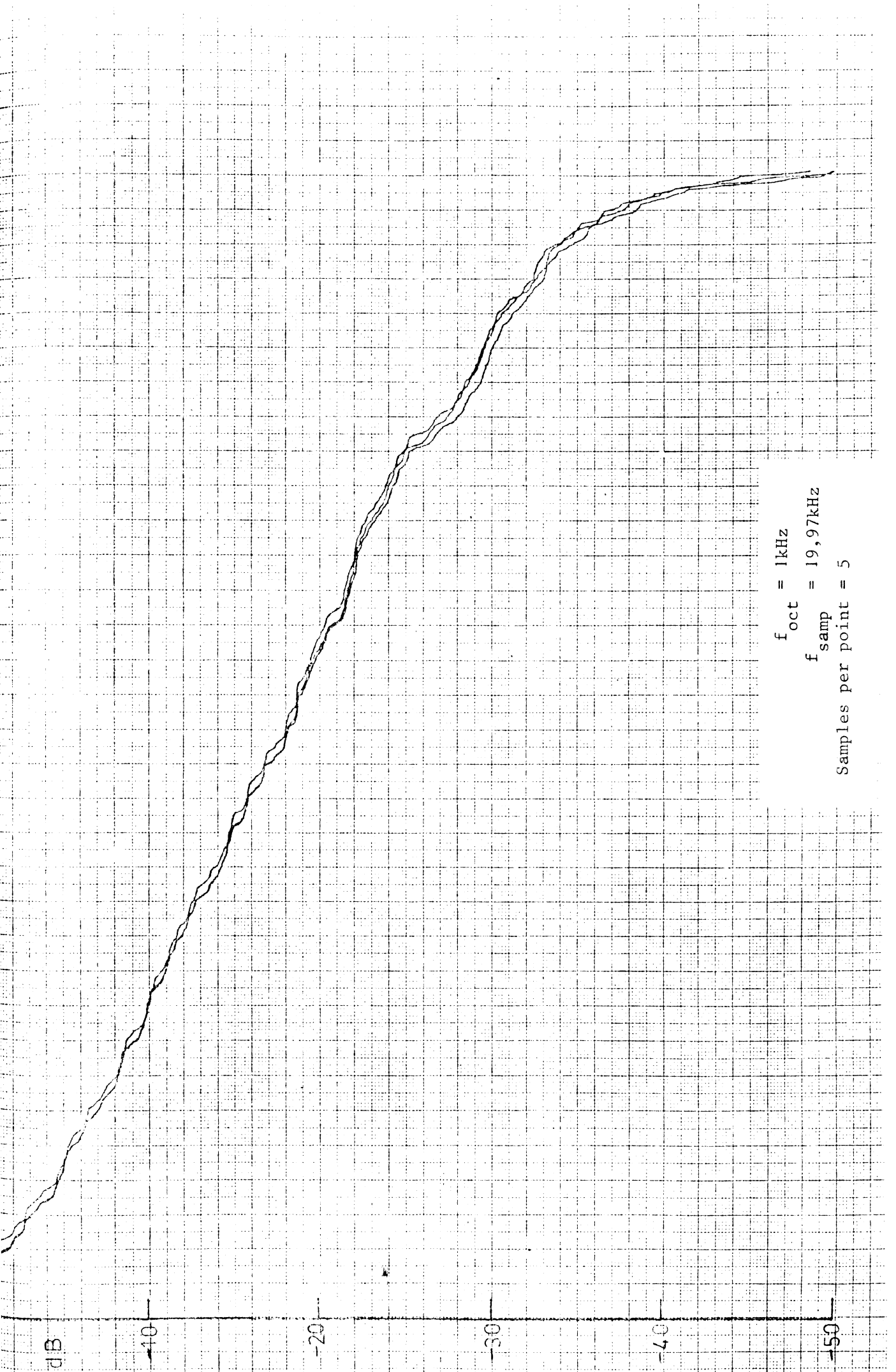
dB
-10
-20
-30
-40
-50
f_{oct} = 1kHz
f_{samp} = 19,97kHz
Samples per point = 5

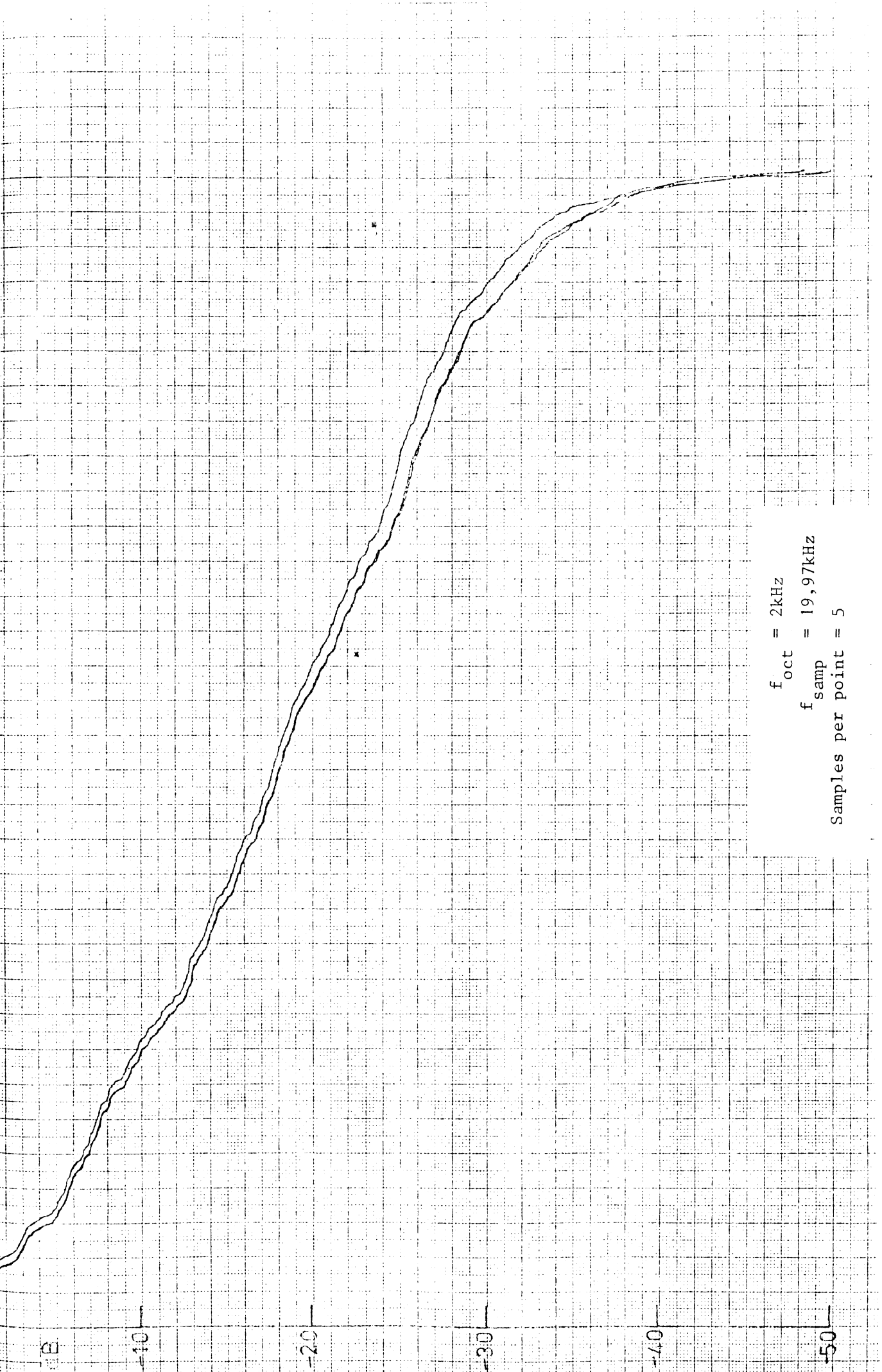
dB
-10
-20
-30
-40
-50
f_{oct} = 2kHz
f_{samp} = 19,97kHz
Samples per point = 5

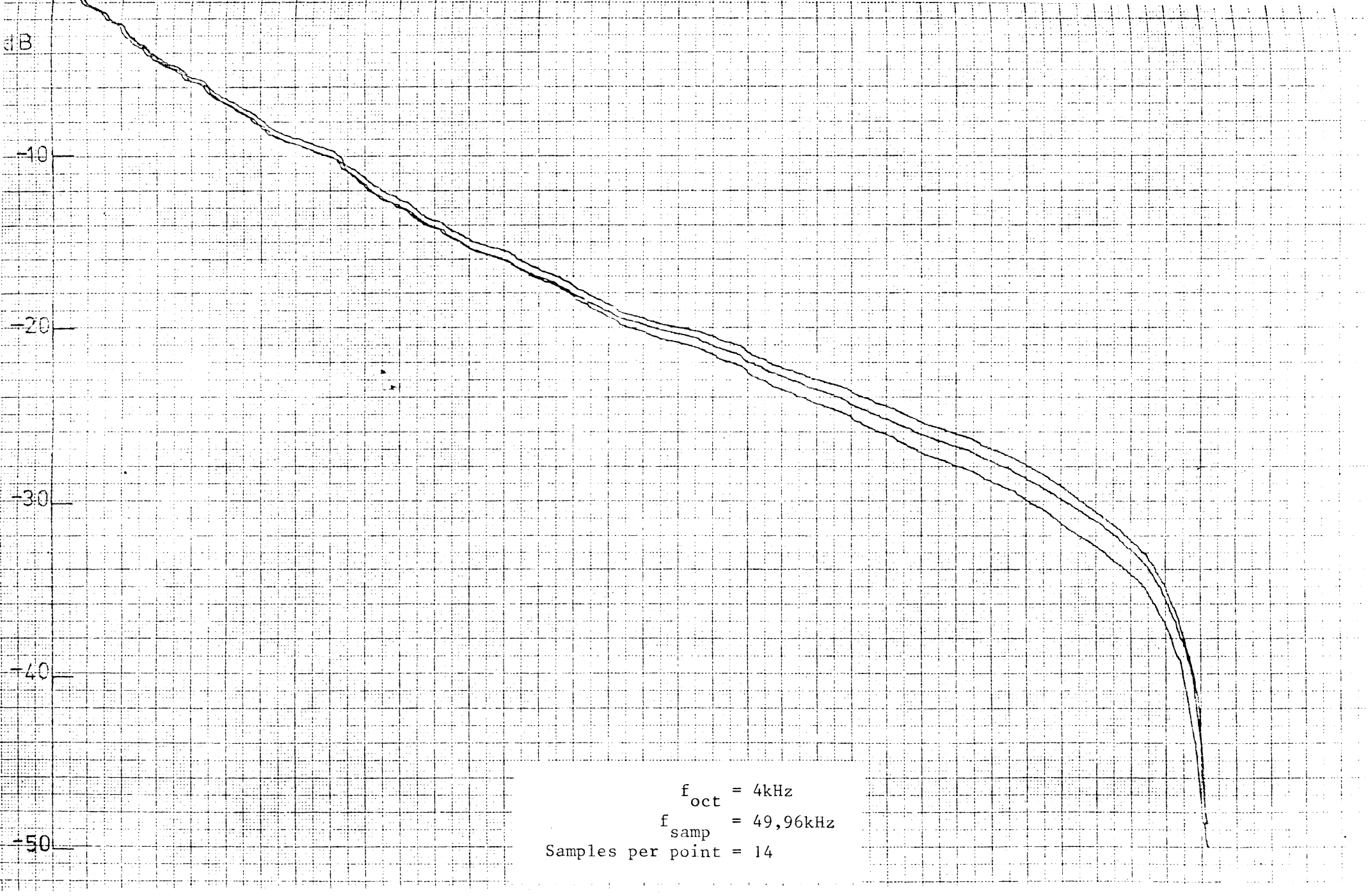
dB
-10
-20
-30
-40
-50
f_{oct} = 4kHz
f_{samp} = 49,96kHz
Samples per point = 14

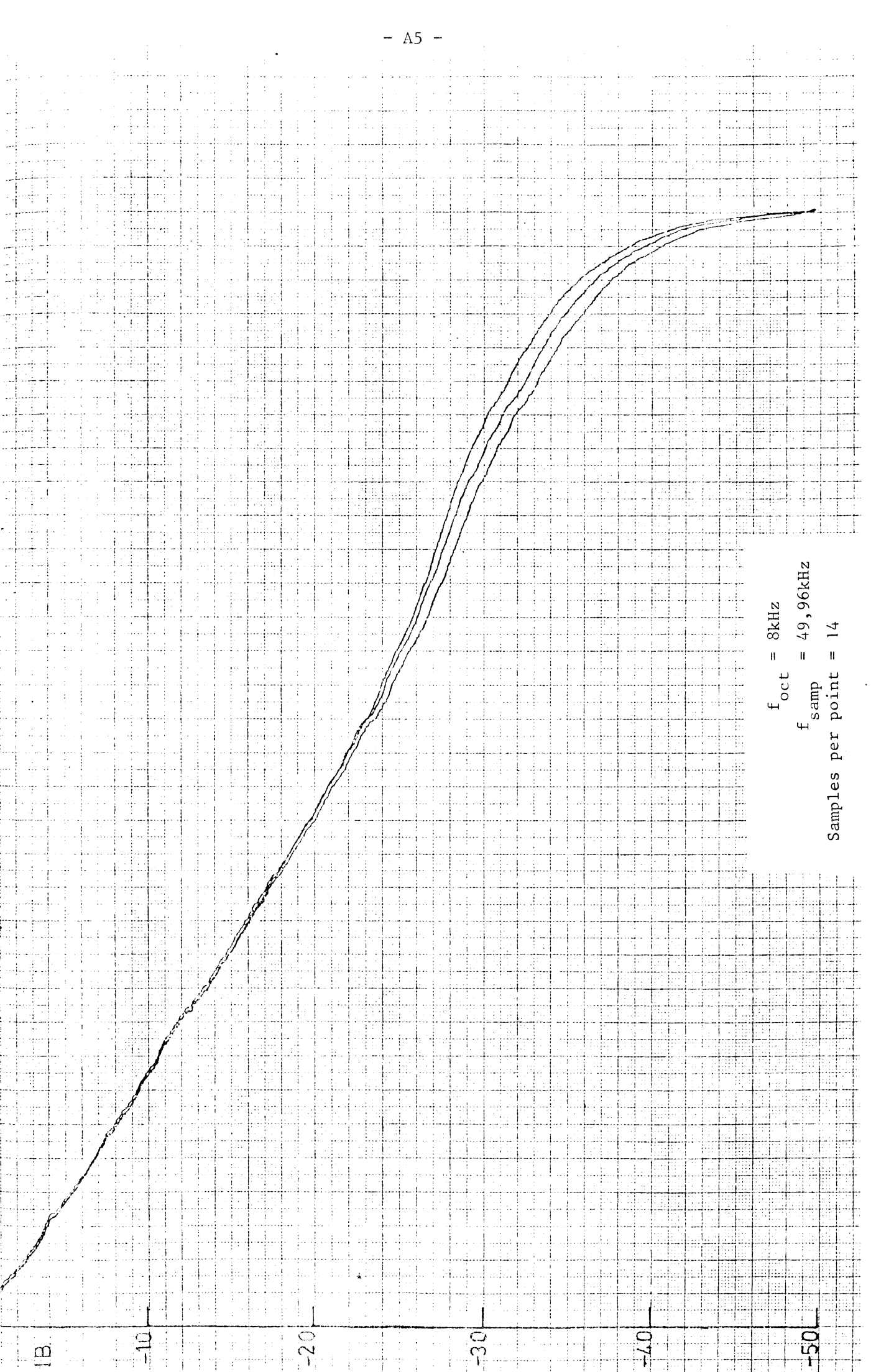
-10
-20
-30
-40
-50
dB
f_{oct} = 8kHz
f_{samp} = 49,96kHz
Samples per point = 14

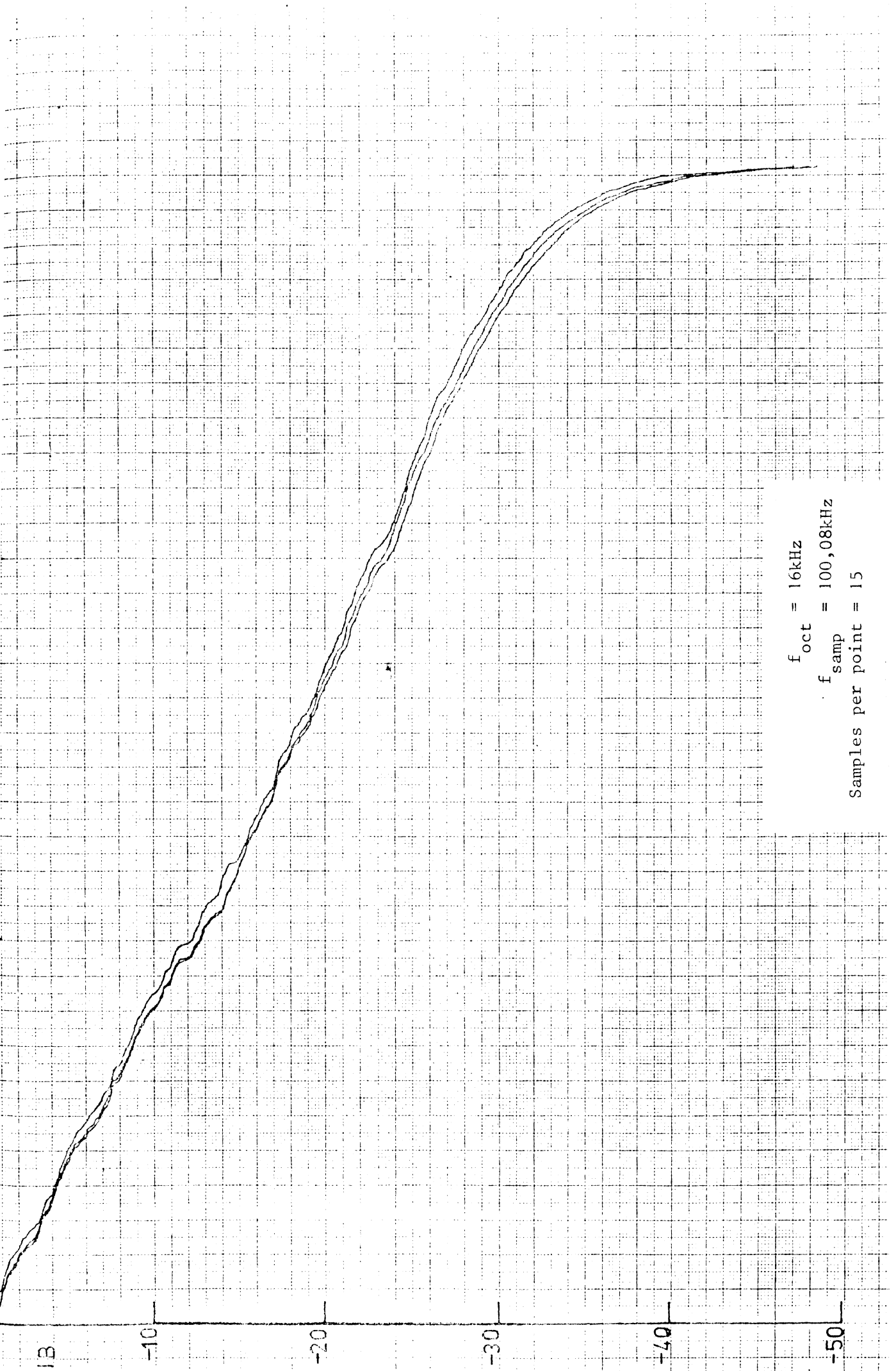
dB
-10
-20
-30
-40
-50
f_{oct} = 16kHz
f_{samp} = 100,08kHz
Samples per point = 15

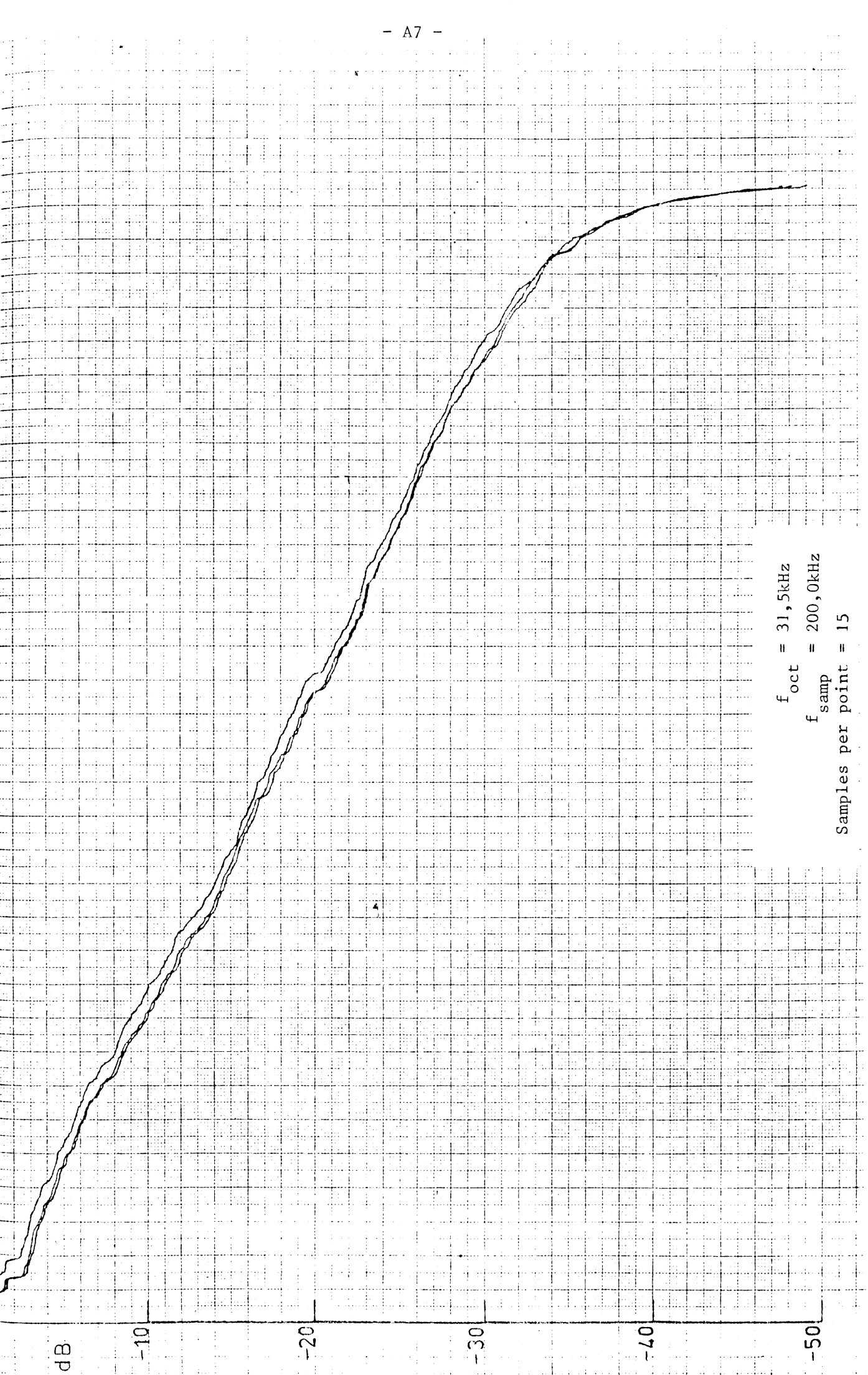
dB
-10
-20
-30
-40
-50
f_{oct} = 31,5kHz
f_{samp} = 200,0kHz
Samples per point = 15

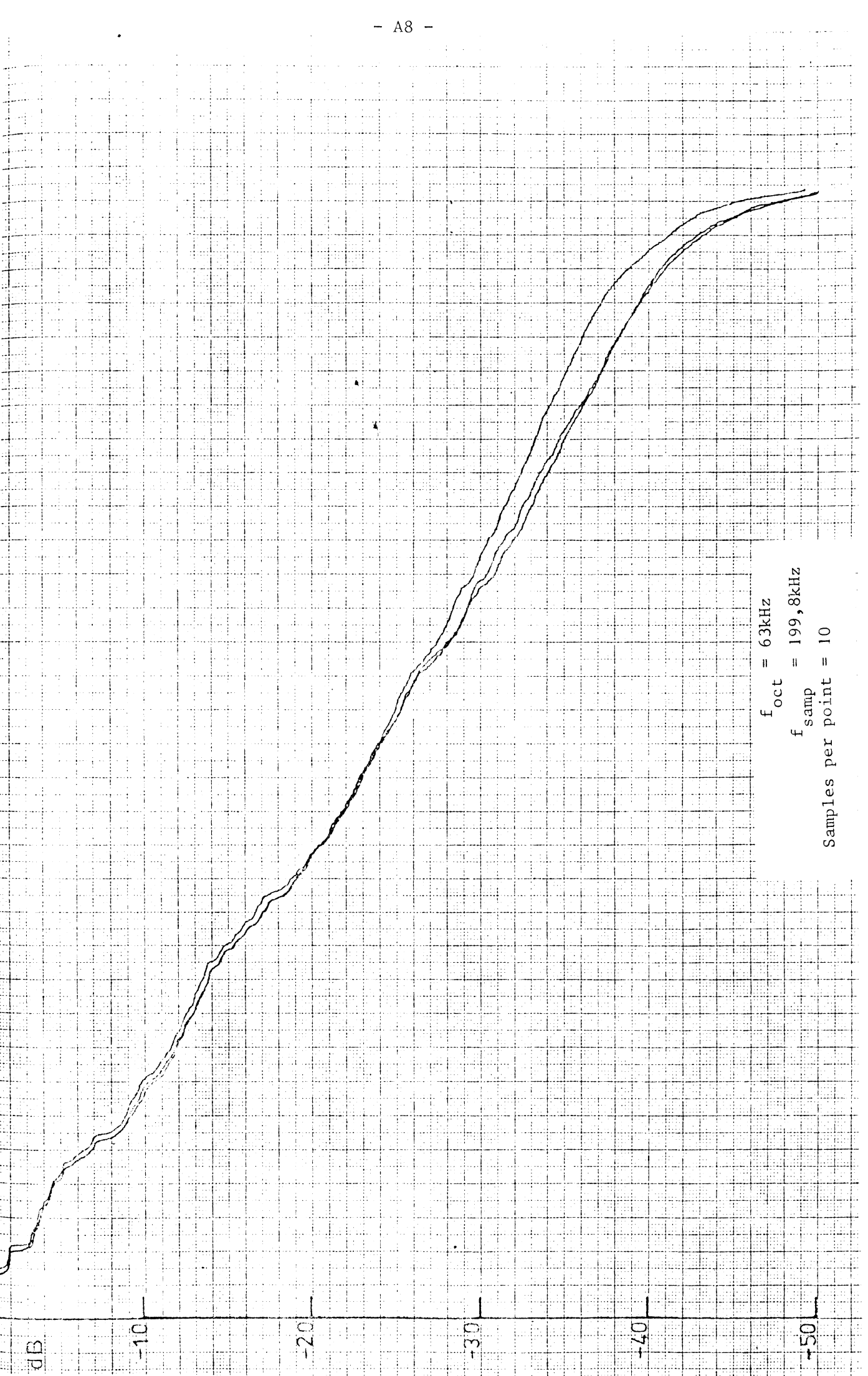
dB
-10
-20
-30
-40
-50
f_{oct} = 63kHz
f_{samp} = 199,8kHz
Samples per point = 10

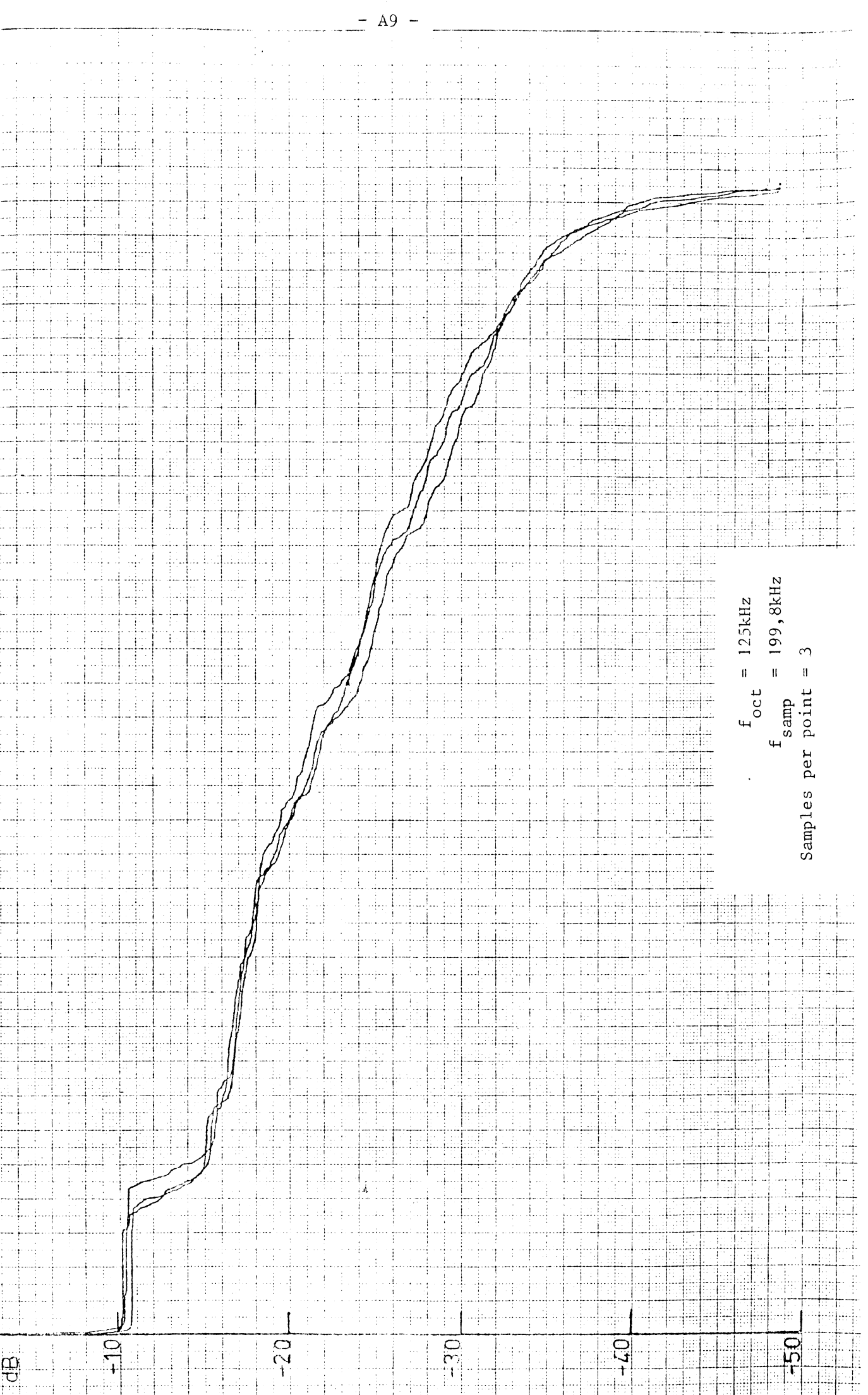
dB
-10
-20
-30
-40
-50
f_{oct} = 125kHz
f_{samp} = 199,8kHz
Samples per point = 3

APPENDIX 2

C5 BASIC Call Package (204,205)

Introduction

This package was written as an extension to Data General's Single User BASIC version 03 by Gordon. The package allows the use of assembler language call drivers or subprograms in BASIC programs. Data may be passed between the call drivers and the BASIC program. This therefore enables BASIC to be used to communicate with devices other than a keyboard and to store data in a file. The call drivers must be written in relocatable binary form and have a fixed leader and trailer format. Once assembled the relocatable binary files are linked together to form one file which when loaded together with the standard BASIC will form C5 BASIC. A distinct advantage of C5 BASIC is that the call drivers can be tested interactively from the keyboard, and BASIC programs are easily modified.

2. FORMAT OF CALL DRIVERS

2.1 BASIC call statement

The BASIC statement used to call a driver has the following format.

```
NNN    CALL    "NAME",     P1, P2, P3, .....
```

where NNN — is the line number of the BASIC program. If the line number is not present the statement will be executed in the keyboard mode i.e. the call driver will be called immediately on a carriage return.

"NAME" — is the ASCII string or integer number (0 n 2^{16}-1) by which the driver is identified. It may be either a number or an ASCII string surrounded by quotes.

P1, P2, P3, ... — are parameters passed either to or from the BASIC program. The number is limited to the number that can be fitted into a line in BASIC and the transfer of arrays is not permitted. When the parameter is being passed to the BASIC program it must be a variable name.
When the parameter is being passed from the BASIC program it may be a variable name, or a numerical value.
The number of parameters in the list must exactly match the number catered for in the call driver otherwise an error message will be generated. The parameters are treated in the sequence in which they are encountered in the call driver.

2.2 Format of the call driver

The format for the driver is as follows.

```
.NREL          ; must be relocatable
.TXTM 1        ; bytes packed left to right
.ENT           ; entry points separated by commas
```

```
                .EXTN                   ; external normals, all pseudo
                                        ; functions used must be declared
                                        ; here separated by commas
                NEXT                    ; address of last word + 1 of driver
(see note 1,3)                          ; address of initialization routine
(see note 2,3)                          ; address of termination routine
(see note 3)                            ; address of powerfail restart routine
(see note 3)                            ; interrupt device code
(see note 3)                            ; address of interrupt service routine
(see note 3)                            ; new mask word
                .TXTF "NAME"            ; name of call driver
START:                                  ; start of coding.


NEXT = .
.END
```

Note 1. If it is necessary to do any coding before any driver routine then the initialization routine may be useful e.g. to save accumulators and open files.

2. Likewise and usually in conjunction with an initialization routine the termination routine may be used to restore the CPU to its previous state.

3. If, as in all the drivers used in this work, there are no routines then the respective routine addresses should be replaced by -1.

Drivers may be written singly as above or may be concatenated into one program. This allows a common data-base between the drivers and can save unnecessary data transfers to and from BASIC. Another advantage of concatenating drivers is that they can share common service routines e.g. initialization and termination.

Below is the format for concatenated drivers. Note how the last addressed + 1 are chained together.

```
                .NREL
                .TITL                   ; optional
```

```
                .ENT                    ; external normals
                .TXTM 1                 ; byte packing L to R
CHAIN : DRIVA                           ; beginning of chain
-1                                      ;
-1                                      ;
-1                                      ;    no service routines for driver A
-1                                      ;
-1                                      ;
-1                                      ;
                .TXTF "NAME-A"          ; name of driver A
STARTA:                                 ; coding for driver A

DRIVA : DRIVB                           ; chaining end of drivers together
-1                                      ;
-1                                      ;
-1                                      ;    no service routines for driver B
-1                                      ;
-1                                      ;
-1                                      ;

                .TXTF "NAME-B"
STARTB:

DRIVB = .                               ; last driver
.END
```

2.3 .CALL Pseudo verbs used in drivers

Although more pseudo verbs are available only the ones used in drivers written for this experiment will be described.

The .CALL pseudo verb and all pseudo functions used in drivers must be declared at the beginning of the driver or series of drivers as external normals. The format of the .CALL pseudo verb is as follows:

```
.CALL
pseudo function
```

All pseudo functions leave AC2 unaltered with the exception of GETC. After returning from all pseudo functions AC3 has the following significance

-1	no more parameters	
0	delimiter was a,	differing data storage
+1	delimiter was a;	formats.

The .CALL Pseudo verb must not be used with interrupt handlers since .CALL pseudo functions are not re-entrant

pseudo function	use
RETURN	- returns control to BASIC, logically the last instruction in a driver.
GET	- fetches a double precision twos' complement integer into AC0, AC1 from BASIC. On return the accumulators are AC 0 - high order of word AC 1 - low order of word AC 2 - unchanged AC 3 - break character.
PUT	- passes a double precision twos' complement integer from AC 0, AC 1 into BASIC. Before the call the accumulators must contain AC 0 - high order word AC 1 - low order word AC 2, AC 3 - don't care On return the accumulators contain AC 0, AC 1 - altered AC 2 - unchanged AC 3 - break character

3. USER INSTRUCTIONS

In order to run in C5 BASIC the user must configure a program which when loaded with the Data General BASIC will form C5 BASIC. Firstly all the userdrivers which are to be used must be linked together with the standard routines as follows under DDOS 1.6.

```
            $VDU
LINK (name, MAP, FIRST, DISK : B, BINARYFILES : B, DISKFILES : B ,
     SBINARYFILES : B, userdriver : RB1, userdriver : RB2, LAST)
```

where name is to be the file name of the linked string $VDU or MAP

is the file or output device on which the global map is listed.

DISK : B
BINARYFILES : B
DISKFILES : B
SBINARYFILES : B
} - are standard functions of C5 BASIC and have been respectively renamed A, B, C and D for brevity

userdriver : RB1
userdriver : RB2 etc.
} - are the userwritten call drivers in relocatable binary format

FIRST and LAST - are respectively the first and last files in the string of drivers.

Once the drivers have been linked the program may be loaded with the following command.

C5 BASIC, name

This will load both the C5 BASIC and the call drivers. To run the user must halt the computer, load 3 into the address register and start the computer. This should start the computer running in BASIC. To check type RUN and the computer will reply

* READY

The following commands may be used for saving BASIC programs on diskette, recalling them and transferring control to DDOS 1.6.

"LIST", "name" — This will copy the program currently in the BASIC user area onto a file called name. If name does not exist it will be created. Files written by this command are the same as normal DDOS ascii files and may be listed under DDOS using COPY etc.

"ENTER", "name"	Will clear the user area in BASIC i.e. perform a "NEW" and then load the file called name.
"ENTER"; "name"	does the same as above but does not do a 'NEW' i.e. any program already in the user space will remain.
"PROTECT", "name"	makes file name write and delete protected.
"DDOS"	Transfers control from C5 BASIC to DDOS. It end files all open files and closes them. This is the only safe and recommended way to transfer control to DDOS.

APPENDIX 3

Listings of BASIC program LADEXER and assembly language package PACK of call drivers

```
REM                                    ***************************************************
*************
REM                                    ***** HIGH SPEED LAD EXERCISER PROGRAM ******
*************
REM                                    ***************************************************
*************
PRINT "OPTION NO. 0 WILL LIST YOUR OPTIONS"
PRINT "USE ESC KEY TO EXIT PROGRAM"
PRINT
DIM R[3,255]
 PRINT "ENTER YOUR OPTION";
 INPUT O
 PRINT
 IF O<> 0 GOTO  111
 GOSUB  150
 IF O<>1 GOTO  113
 GOSUB  300
 IF O<>2 GOTO  115
 GOSUB  350
 IF O<>3 GOTO  117
 GOSUB  200
 IF O<>4 GOTO  119
 GOSUB  400
 IF O<>5 GOTO  121
 GOSUB  600
 IF O<>6 GOTO  123
 GOSUB  1200
 IF O<>7 GOTO  125
 GOSUB  1000
 IF O<>8 GOTO  127
 GOSUB  1600
 IF O<>9 GOTO  129
 GOSUB  250
 GOTO  100
 REM                                   ***LIST THE OPTIONS***
 PRINT
 PRINT "OPTIONS ARE :"
 PRINT
 PRINT "0  LIST THE OPTIONS"
 PRINT "1  GET A MAP OF CORE"
 PRINT "2  PRIME DMA CONTROLLER & RETURN TO DDOS"
 PRINT "3  OPEN DATA FILE &/OR RESTORE POINTER"
 PRINT "4  DO INTEGRAL SQUARE ON DATA"
 PRINT "5  PRINT"
 PRINT "6  PLOT"
 PRINT "7  DO EDT & IRT ESTIMATES"
 PRINT "8  DO LEAST SQUARES FIT"
 PRINT "9  CLOSE DATA FILE & RETURN TO DDOS"
 PRINT
 RETURN
 REM                                   ***OPEN DATA FILE &/OR RESTORE POINTER***
 CALL "OPENDATA"
 FOR I=1 TO 3
   CALL "HEADER",Z
 NEXT I
 PRINT "DATA RECORD IS ",Z,"SAMPLES"
 RETURN
 REM                                   ***CLOSE DATA FILE & RETURN TO DDOS***
 CALL "CLOSEDATA"
 CALL "CLOSE"
 PRINT
 PRINT "              CHEERIO"
 GOSUB  950
 CALL "DDOS"
```

```
REM                                  ***GET A MAP OF CORE***
CALL "CORMAP",M1,M2,M3
PRINT "NOTE : NUMBERS ARE IN DECIMAL"
PRINT "       TWO SAMPLES ARE STORED IN EACH WORD"
PRINT
PRINT "   C5BASIC","       USER","       DDOS"
PRINT "0",M1,M2-2,M3
PRINT
PRINT "START AT LOC  ",M1,"FOR UP TO",M2-M1-2,"WORDS"
PRINT "START AT LOC  ","    1","FOR UP TO ",M2-2,"WORDS"
PRINT
RETURN
REM                                  ***PRIME DMA CONTROLLER & RETURN TO DDOS***
PRINT "START ADDRESS";
INPUT S1
PRINT
PRINT "NO OF WORDS";
INPUT S2
PRINT
LET S2=S2+1
CALL "SETDMA",S1,S2
LET S1=S1+1
LET S2=S1+S2-2
PRINT "DMA READY"
LET S3= 0
LET S4= 0
FOR J=1 TO 5
  LET S5=S1- INT (S1/8)*8
  LET S1= INT (S1/8)
  LET S3=S3+S5*(10^(J-1))
  LET S6=S2- INT (S2/8)*8
  LET S2= INT (S2/8)
  LET S4=S4+S6*(10^(J-1))
  LET S3= INT (S3+.5)
  LET S4= INT (S4+.5)
NEXT J
PRINT "AFTER DMA XFER TYPE :"
PRINT "IMAGE(DATA,";S3;",";S4;")"
PRINT
PRINT "THEN RESTART AT LOC 2 IF LADEXER IS NOT OVERWRITTEN"
PRINT "OR RELOAD C5BASIC.PRO THEN ENTER,LADEXER & RUN"
FOR J=1 TO 150
  LET W= SIN (J)
NEXT J
CALL "DDOS"
REM                          ***DO INTEGRAL SQUARE ON DATA***
GOSUB  200
GOSUB  1530
PRINT "HOW MANY SAMPLES PER INTEGRAL";
INPUT A1
PRINT
LET A2= INT (Z/A1)
IF A2<=1024 GOTO  445
PRINT "TOO MANY INTEGRALS (1024 IS MAX) CHOOSE AGAIN"
GOTO  415
PRINT "THERE WILL BE ";A2,"INTEGRALS OF",A1,"SAMPLES EACH"
LET S=0
FOR L=1 TO 4
  FOR K=1 TO 256
    CALL "INTEGRATE",A1,B,T
    IF B<> 0 GOTO  510
    LET S=T+S
    LET R[L-1,K-1]=S
    LET Z=Z-A1
    IF Z<= 0 GOTO  510
  NEXT K
```

```
PRINT "TOTAL INTEGRAL =",S
IF K<256 GOTO  535
IF L>3 GOTO  550
LET L=L+1
LET K=1
LET R(L-1,K)=-1
RETURN
REM                          ***PRINT SUBROUTINE***
PRINT "YOU MAY PRINT :1  SAMPLED DATA"
PRINT "                2  CUMULATIVE INTEGRAL SQUARE"
PRINT "                3  DECAY IN DB                 "
PRINT "PICK A NUMBER FROM 1 TO 3  ";
INPUT O
PRINT
IF O=1 GOTO  600
IF O=2 GOTO  750
IF O=3 GOTO  840
GOTO  630
REM                          ***DATA PRINTOUT***
GOSUB  200
PRINT "NUMBER OF SAMPLES TO BE PRINTED(A 0 WILLPRINT ALL)";
INPUT O
PRINT
PRINT
PRINT
CALL "READDATA",P
IF P<128 GOTO  710
LET P=-1*(P-128)
PRINT P;
LET O=O-1
LET Z=Z-1
IF Z= 0 GOTO  735
IF O<> 0 GOTO  695
PRINT
PRINT
RETURN
REM                          ***INTEGRAL SQUARE PRINTOUT***
PRINT "NO.  OFINTEGRALS TO BE PRINTED (A 0 WILL PRINT ALL)";
INPUT O
PRINT
PRINT "CUMULATIVE INTEGRAL SQUARES"
PRINT
FOR L=1 TO 4
  FOR K=1 TO 256
    IF R(L-1,K-1)=-1 GOTO  820
    PRINT R(L-1,K-1),
    LET O=O-1
    IF O= 0 GOTO  820
  NEXT K
NEXT L
PRINT
PRINT
RETURN
REM                          ***DELAY PRINTOUT***
PRINT "TOTAL INTEGRAL =",S
PRINT "TYPE IN 0 DB REF.(WILL DEFAULT TO ABOVE ON 0 )";
INPUT H
IF H< 0 GOTO  855
IF H> 0 GOTO  875
LET H=S
PRINT
PRINT
PRINT "DECAY IN DB REL TO",H
```

```
PRINT
FOR L=1 TO 4
  FOR K=1 TO 256
    IF R(L-1,K-1)=-1 GOTO  930
    IF R(L-1,K-1)>=H GOTO  930
    PRINT 4.34295* LOG ((H-R(L-1,K-1))/H),
  NEXT K
NEXT L
PRINT
PRINT
RETURN
REM                    ***DELAY TO ALLOW PLOTTER TO SETTLE***
FOR I=1 TO 800
NEXT I
RETURN
 REM                    ***EDT & IRT ESTIMATES***
 PRINT "SAMPLE FREQUENCY IN KHZ ";
 INPUT F
 PRINT
 LET F=F*1000
 PRINT "0 DB REF.  (A 0 WILL DEFAULT TO TOTAL INTEGRAL)";
 INPUT H
 IF H< 0 GOTO  1030
 IF H> 0 GOTO  1050
 LET H=S
 PRINT
 FOR L=1 TO 4
   FOR K=1 TO 256
     IF R(L-1,K-1)=-1 GOTO  1135
     IF R(L-1,K-1)>=H GOTO  1135
     LET V=4.34295* LOG ((H-R(L-1,K-1))/H)
     IF V<-1 GOTO  1085
     LET D1=V
     LET T1=256*(L-1)+(K-1)
     IF V<-11 GOTO  1110
     LET D2=V
     LET T2=256*(L-1)+(K-1)
     IF V<-15 GOTO  1125
     LET D3=V
     LET T3=256*(L-1)+(K-1)
   NEXT K
 NEXT L
 LET R1=(T2-T1)/(D1-D2)*A1/F*60
 LET R2=(T3-T1)/(D1-D3)*A1/F*60
 PRINT "EDT (10DB) ESTIMATE =",R1,"SEC"
 PRINT "IRT (15DB) ESTIMATE =",R2,"SEC"
 RETURN
 REM                    ***PLOT SUBROUTINE***
 PRINT "YOU MAY PLOT FIRST 1024 POINTS OF :1  DATA"
 PRINT "                                   2  DECAY"
 PRINT "PICK YOUR NUMBER ";
 INPUT O
 PRINT
 IF O=1 GOTO  1245
 IF O=2 GOTO  1370
 GOTO  1225
 REM                    ***DATA PLOT***
 GOSUB  200
 CALL "XYPLOT", 0,512,1
 PRINT "READY PLOTTER & PEN DOWN"
 PRINT "TYPE A NO.  TO CONTINUE"
 INPUT O
 PRINT
 CALL "XYPLOT",1023,512,1
 GOSUB  950
```

```
GOSUB  950
CALL "XYPLOT", 0,512,1
GOSUB  950
LET X= 0
CALL "READDATA",P
IF P<128 GOTO  1303
LET P=-1*(P-128)
GOTO  1305
LET Y=2^( ABS (P/2))
LET Y= INT (Y)
IF Y<512 GOTO  1325
LET Y=511
IF P> 0 GOTO  1335
LET Y=-Y
LET Y=512+Y
CALL "XYPLOT",X,Y,1
PRINT P;
LET X=X+1
IF X<1024 GOTO  1300
RETURN
REM                    ***DECAY PLOT*****
IF S> 0 GOTO  1375
PRINT "YOU MUST INTEGRATE FIRST"
GOTO  400
PRINT "TYPE IN 0 DB REF.  (DEFAULTS TO TOTAL INTEGRAL ON 0)"
INPUT H
IF H< 0 GOTO  1380
IF H> 0 GOTO  1400
LET H=S
CALL "XYPLOT", 0,1000,1
PRINT "READY PLOTTER & PEN DOWN"
PRINT "TYPE A NO.  TO CONTINUE"
INPUT O
PRINT
LET Y=1000
FOR J=1 TO 5
  LET Y=Y-200
  CALL "XYPLOT", 0,Y,1
  GOSUB  950
  GOSUB  950
  CALL "XYPLOT",20,Y,1
  GOSUB  950
  CALL "XYPLOT", 0,Y,1
  GOSUB  950
NEXT J
CALL "XYPLOT", 0,1000,1
GOSUB  950
FOR L=1 TO 4
  FOR K=1 TO 256
    IF R(L-1,K-1)=-1 GOTO  1520
    IF R(L-1,K-1)>=H GOTO  1520
    LET Y=4.34295* LOG ((H-R(L-1,K-1))/H)
    PRINT Y,
    LET Y=1000+ INT (20*Y)
    IF Y< 0 GOTO  1505
    IF Y>1023 GOTO  1505
    LET X=(L-1)*256+K-1
    CALL "XYPLOT",X,Y,1
  NEXT K
NEXT L
PRINT
PRINT
RETURN
PRINT "DO YOU WANT TO DECREASE THE TOTAL NO.  OF SAMPLES"
PRINT "TYPE 0 FOR NO ELSE YES"
INPUT O
```

```
IF O= 0 GOTO  1575
PRINT "HOW MANY SAMPLES DO YOU WANT TO INTEGRATE";
INPUT O
PRINT
LET Z=0
PRINT Z,"SAMPLES WILL BE INTEGRATED"
RETURN
REM ***LEAST SQUARES FIT***
IF S> 0 GOTO  1620
PRINT "YOU MUST INTEGRATE FIRST"
GOTO  400
PRINT "INPUT SAMPLE FREQUENCY IN KHZ";
INPUT F
LET F=F*1000
PRINT
PRINT "INPUT LOWER LIMIT IN DB OF STR  LINE";
INPUT E1
PRINT
LET E1=-1* ABS (E1)
LET G1= 0
LET G2= 0
LET G3= 0
LET G4= 0
LET G5= 0
PRINT "TYPE IN 0 DB REF (DEFAULTS TO TOTAL INTEGRAL ON 0)";
INPUT H
PRINT
IF H< 0 GOTO  1680
IF H> 0 GOTO  1700
LET H=S
FOR L=1 TO 4
  FOR K=1 TO 256
    LET D=4.34295* LOG ((H-R(L-1,K-1))/H)
    IF D>-1 GOTO  1760
    IF D<E1 GOTO  1770
    LET X=256*(L-1)+K-1
    LET G1=G1+1
    LET G2=G2+X
    LET G3=G3+X*X
    LET G4=G4+X*D
    LET G5=G5+D
  NEXT K
NEXT L
LET G6=(G1*G4-G2*G5)/(G1*G3-G2*G2)
LET G7=-1*A1/F*60/G6
PRINT "REV TIME BY LEAST SQUARES IS ";G7;"SEC"
RETURN
REM ***YEAR DOT( )***
```

```
ER","PLOTSETUID"
F
  CALL "XYPLOT", 0, 0.1
  GOSUB  900
  CALL "XYPLOT", 0,1000,1
  GOSUB  900
  CALL "XYPLOT",1000,1000,1
  GOSUB  900
  CALL "XYPLOT",1000, 0,1
  GOSUB  900
  GOTO  100
  FOR I=1 TO 500
    PRINT I
  NEXT I
  RETURN
  END
```

```
(PACK,*VOL,*[illegible],A,B,[illegible],REVERSIN,PRIMEDIN,LAST

 1 6 RELOCATING LINKER VER 1.0 * 02/21/78    PACK

E    NREL,    ZREL     START

T    000400   000050
     011100   000050   011457
R    011507   000050
T    011545   000050
A    012143   000050
R    012236   000050
C    013132   000050
     013733   000050
     017671   000050

T ADDR        011457

OL  TABLE

O 011427    ADCB  011425    AMASK 007731    ATOP  007366
K 000175    BTAB  011426    CLAM  000010    CLS   011261
  000016    EFILE 012023    EFLAG 177776    ENTER 011142
  012123    ERROR 000004    ERSTP 000005    ESC   000012
P 177777    GBUF  011301    GET   000001    GETA  000007
  000002    GETDC 000011    GETPR 177771    GETC  177774
  000003    GETF  000005    GETM  177775    GETP  177772
  000013    GOSUB 000000    GOTO  000001    IN    011340
  007521    ITTI  000033    ITTO  000001    LFLAG 177777
  011112    MLTTF 011424    NEW   000007    OMODE 011257
  011215    OUT   011325    PAGE  000100    PRDY  000662
  000002    PUTA  000010    PUTB  000003    PUTBC 000012
  000004    PUTF  000006    PUTM  177776    PUTP  177773
  000014    REALD 000011    RETUR 000000    RSET  012073
LG 011260    SBUF  011307    SETM  000007    SFLAG 177775
AD 013670    SYSA  011321    TRNON 000246    MSET  012074
SS 000300    .CALL 006007    .COM  000325    .BUS  000307
  000006    .INTR 000134    .PAGE 000326    .STAR 007371
A 000150

BASIC,PACK

ASIC,PACK

ADR
```

```
                                .TITL   REVERB
                                .NOCL
                                .EXTN   .CALL,GET,PUT,GETC,RETURN
        000001                  .TXTM   1
                                                ;"OPENDATA"  OPENS DATA FILE
                                                ;AT FIRST SECTOR
000000' 000025'  DRIVE:  DRIVB
000001' 177777   -1
000002' 177777   -1
000003' 177777   -1
000004' 177777   -1
000005' 177777   -1
000006' 177777   -1
000007' 147720           .TXTF   "OPENDATA"
000010' 142716
000011' 142101
000012' 152301
000013' 000000
000014' 102420   OPEN:   SUBZ    0,0                   ;OPEN AT FIRST SECTOR
000015' 024527           LDA     1,.BUFP0
000016' 030027           LDA     2,.FNPM0
000017' 034530           LDA     3,.DOS
000020' 007400           JSR     @0.SYS,3
000021' 000007           0.OPN
000022' 000522           STA     2,.BUFP0
000023' 177777           .CALL
000024' 177777           RETURN
000025' 000047'  DRIVB:  DRIVC
000026' 177777   -1
000027' 177777   -1
000030' 177777   -1
000031' 177777   -1
000032' 177777   -1
000033' 177777   -1
000034' 141714           .TXTF   "CLOSEDATA"
000035' 147723
000036' 142704
000037' 140724
000040' 140400
                                                ;"CLOSEDATA" CLOSES DATA FILE
                                                ;USED AS A SAFETY MEASURE
000041' 030503   CLOSE:  LDA     2,.BUFP0
000042' 034505           LDA     3,.DOS
000043' 007400           JSR     @0.SYS,3
000044' 000010           6.CLO
000045' 000000'          .CALL
000046' 000034'          RETURN
000047' 000106'  DRIVC:  DRIVA
000050' 177777   -1
000051' 177777   -1
000052' 177777   -1
000053' 177777   -1
000054' 177777   -1
000055' 177777   -1
000056' 151305           .TXTF   "READDATA"
000057' 140704
000060' 142301
000061' 152301
```

```
   2
1/70
00062' 000000
                                        ;READS A BYTE AND PUTS IT BACK TO BASIC
00063' 030461   READ    :LDA    2, BUFP0
00064' 034463           LDA     3,DOOS
00065' 007404           JSR     @0, IN, 3
00066' 000536           JMP     EOF
00067' 024457           LDA     1,SGNMSK
00070' 107400           AND     0,1
00071' 034413           LDA     3, TABLE
00072' 137000           ADD     1,3
00073' 025400           LDA     1,0,3
00074' 034411           LDA     3,SGN
00075' 117400           AND     0,3
00076' 167000           ADD     3,1
00077' 102400           SUB     0,0
00100' 000045'          .CALL
00101' 177777           PUT
00102' 000100'          .CALL
00103' 000046'          RETURN
00104' 000762'  .TABLE: TABLE
00105' 000200   SGN:    200
00106' 000151'  DRIVD:  DRIVE
00107' 177777   -1
00110' 177777   -1
00111' 177777   -1
00112' 177777   -1
00113' 177777   -1
00114' 177777   -1
00115' 144305           .TXTF   "HEADER"
00116' 140704
00117' 142722
00120' 000000
                                                ;"HEADER",2
                                                ;RETURNS 2 -NO. OF BYTES IN
                                                ;DATA FILE
00121' 030423   HEAD:   LDA     2, BUFP0
00122' 034425           LDA     3,DOOS
00123' 007404           JSR     @0, IN, 3
00124' 000500           JMP     EOF
00125' 105300           MOVS    0,1
00126' 044422           STA     1,BYTTOT
00127' 030415           LDA     2, BUFP0
00130' 034417           LDA     3,DOOS
00131' 007404           JSR     @0, IN, 3
00132' 000472           JMP     EOF
00133' 024415           LDA     1,BYTTOT
00134' 107000           ADD     0,1
00135' 125120           MOVZL   1,1
00136' 044412           STA     1,BYTTOT
00137' 102400           SUB     0,0
00140' 000102'          .CALL
00141' 000101'          PUT
00142' 000140'          .CALL
00143' 000103'          RETURN
00144' 000252'  BUFP0:  BUFP0
00145' 000242'  .FNAM0: FNAM0
00146' 000037   SGNMSK: 37
00147' 035455   DOOS:   035455
```

```
00150' 000001  BYTTOT:  .BLK     1
                        ;"INTEGRATE",A,B,T
                        ;A=NO  OF BYTES TO INTEGRATE (<65K)
                        ;B=BREAK CHAR. (=1 IF EOF OTHERWISE=377(OCTAL))
                        ;T=INTEGRAL TOTAL
                        ;
                        ;INTEGRATE WILL TAKE THE NEXT  A  BYTES AND
                        ;VIA A TABLE INTEGRATE THEM TO GET  T  AND
                        ;PASS  T  BACK TO BASIC
                        ;IF EOF IS DETECTED BEFORE END
                        ;THEN BREAK CHAR.  IS CURRENT VALUE OF  A
                        ;OTHERWISE BREAK CHAR  IS 0
00151' 001016' DRIVE:   DRIVT
00152' 177777  -1
00153' 177777  -1
00154' 177777  -1
00155' 177777  -1
00156' 177777  -1
00157' 177777  -1
00160' 144716           .TXTF    "INTEGRATE"
00161' 152305
00162' 143722
00163' 140724
00164' 142400
00165' 000142' START:   .CALL
00166' 177777           GET                      ;GET NO.  OF BYTES TO INTEGRATE
00167' 044460           STA      1,LOOPC
00170' 102420           SUBZ     0,0
00171' 040454           STA      0,SUM           ;INITIALISE TOTAL TO ZERO
00172' 040451           STA      0,SUM+1
00173' 000751  LOOP:    LDA      2,.BUFF0        ;BUFFER PREFIX ADDRESS
00174' 034753           LDA      3,DDOS          ;SYSTEM TABLE ADDRESS
00175' 007404           JSR      @D.IN,3         ;GET BYTE IN AC0
00176' 000426           JMP      EOF             ;NO MORE BYTES
00177' 014751           DSZ      BYTTOT
00200' 000402           JMP      .+2
00201' 000423           JMP      EOF
00202' 030744           LDA      2,SGNMSK
00203' 143400           AND      2,0
00204' 115120           MOVZL    0,3             ; DOUBLE FOR LOOKUP
00205' 102400           SUB      0,0
00206' 030443           LDA      2,.TLOOK
00207' 157000           ADD      2,3
00210' 031400           LDA      2,0,3
00211' 035401           LDA      3,1,3
00212' 024433           LDA      1,SUM
00213' 020433           LDA      0,SUM+1
00214' 167022           ADDZ     3,1,SZC
00215' 151400           INC      2,2
00216' 143000           ADD      2,0
00217' 044426           STA      1,SUM
00220' 040426           STA      0,SUM+1
00221' 014426           DSZ      LOOPC
00222' 000751           JMP      LOOP
00223' 000405           JMP      EXIT
00224' 030728  EOF:     LDA      2,.BUFF0                ;BUFFER PREFIX ADDRESS
00225' 034722           LDA      3,DDOS                  ;SYSTEM TABLE  ADDRESS
00226' 007400           JSR      @D.CVS,3
```

```
   4
4/78
00227'000010            0.CLO                                   ;CLOSE DATA FILE
00230'102400  EXIT:     SUB     0,0
00231'024416            LDA     1,LOOPC
00232'000165'           .CALL
00233'000141'           PUT                                     ;PUT  VALUE OF  A
00234'024411            LDA     1,SUM                           ;LOW ORDER TOTAL
00235'020411            LDA     0,SUM+1                         ;HI  ORDER TOTAL
00236'000232'           .CALL
00237'000233'           PUT                                     ;PUT TOTAL INTEGRAL
00240'000236'           .CALL
00241'000143'           RETURN
00242'042101  FNAM0:    .TXT    *DATA*
00243'052101
00244'000000
00245'000002  SUM:      .BLK    2
00247'000001  LOOPC:    .BLK    1
00250'000001  TLOOP:    .BLK    1
00251'000672' .TLOOK:   TLOOK
00252'000420  BUFPO:    .BLK    420
00672'000000  TLOOK:    0
00673'000000            0
00674'000000            0
00675'000001            1
00676'000000            0
00677'000007            7
00700'000000            0
00701'000003            3
00702'000000            0
00703'000177            177
00704'000000            0
00705'000077            77
00706'000000            0
00707'000017            17
00710'000000            0
00711'000037            37
00712'000000            0
00713'077777            77777
00714'000000            0
00715'037777            37777
00716'000000            0
00717'007777            7777
00720'000000            0
00721'017777            17777
00722'000000            0
00723'000377            377
00724'000000            0
00725'000777            777
00726'000000            0
00727'003777            3777
00730'000000            0
00731'001777            1777
00732'000000            0
00733'000000            0
00734'000000            0
00735'000000            0
00736'000000            0
00737'000000            0
00740'000000            0
```

```
   5
4/78
00741' 000000            0
00742' 000000            0
00743' 000000            0
00744' 000000            0
00745' 000000            0
00746' 000000            0
00747' 000000            0
00750' 000000            0
00751' 000000            0
00752' 000000            0
00753' 177777            177777
00754' 000001            1
00755' 177777            177777
00756' 000000            0
00757' 000000            0
00760' 000003            3
00761' 177777            177777
00762' 000000   TABLE:0
00763' 000001            1
00764' 000003            3
00765' 000002            2
00766' 000007            7
00767' 000006            6
00770' 000004            4
00771' 000005            5
00772' 000017            17
00773' 000016            16
00774' 000014            14
00775' 000015            15
00776' 000010            10
00777' 000011            11
01000' 000013            13
01001' 000012            12
01002' 000000            0
01003' 000000            0
01004' 000000            0
01005' 000000            0
01006' 000000            0
01007' 000000            0
01010' 000000            0
01011' 000000            0
01012' 000020            20
01013' 000021            21
01014' 000000            0
01015' 000022            22
01016' 001046'  DRIVF    :DRIVG
01017' 177777   -1
01020' 177777   -1
01021' 177777   -1
01022' 177777   -1
01023' 177777   -1
01024' 177777   -1
01025' 151705            .TXTF    "SETDMA"
01026' 152304
01027' 146701
01030' 000000
01031' 000240'  SET:     .CALL
01032' 000166'           GET                ;GET ST ADDRESS
```

```
  6
/78
01033' 044411            STA     1,M
01034' 001031'           .CALL
01035' 001032'           GET                     ;GET BLK SZ
01036' 044407            STA     1,M+1
01037' 030405            LDA     2,M
01040' 065044            DOA     1,44
01041' 072044            DOB     2,44
01042' 001034'           .CALL
01043' 000241'           RETURN
01044' 000002  M:        .BLK    2
01046' 001074' DRIVG:    DRIVH
01047' 177777  -1
01050' 177777  -1
01051' 177777  -1
01052' 177777  -1
01053' 177777  -1
01054' 177777  -1
01055' 154331                    .TXTF   "XYPLOT"
01056' 150314
01057' 147724
01060' 000000
01061' 001042'           .CALL                   ;X FROM BASIC
01062' 001035'           GET
01063' 065043            DOA     1,43            ;X TO DOA BUFFER
01064' 001061'           .CALL
01065' 001062'           GET                     ;Y FROM BASIC
01066' 066043            DOB     1,43            ;Y TO DOA BUFFER
01067' 001064'           .CALL
01070' 001065'           GET             ;Z FROM BASIC
01071' 067343            DOCP    1,43            ;CLOCK VALUES IN &PEN DOWN
01072' 001067'           .CALL
01073' 001043'           RETURN
       001074' DRIVH=
                         .END
```

```
OL   VALUE   DEFINED   REFERENCES

0   000252'     4:19     2:55
O   000150'     3:01     2:41    2:46    2:49    3:35
E   000041'     1.42
    000147'     2:58     1:22    1:43    2:04    2:37    2:43    3:32    3:57
A   000009'     1:07
B   000025'     1:28     1:07
C   000047'     1:48     1:28
D   00010E'     2:22     1:48
E   000151'     3:13     2:22
F   001016'     5:45     3:13    5:46
G   001046'     6:11     5:46
H   001074'     6:33     6:11
    000224'     3:56     2:06    2:39    2:45    3:34    3:37
    000230'     4:02     3:55
10  000242'     4:12     2:56
          'X    1:03     3:26    5:58    6:02    6:22    6:25    6:29
          X     1:03
    000121'     2:36
    000173'     3:31     3:54
    000247'     4:16     3:27    3:53    4:03
    001044'     6:10     6:01    6:04    6:05
    000014'     1:19
          'X    1:03     2:17    2:52    4:05    4:09
    000063'     2:03     2:02
      'X        1:03     1:27    1:47    2:19    2:54    4:11    6:09    6:32
    001031'     5:57
    000105'     2:21     2:12
S   000146'     2:57     2:07    3:38
T   000165'     3:25
    000245'     4:15     3:29    3:30    3:46    3:47    3:51    3:52    4:06
                         4:07
E   000762'     5:18     2:20
K   000672'     4:20     4:18
P   000250'     4:17
P   000144'     2:55     1:20    1:25    1:42    2:03    2:36    2:42    3:31
                         3:56
L         'X    1:03     1:25    1:46    2:16    2:18    2:51    2:52    3:25
                         4:04    4:08    4:10    5:57    6:02    6:08    6:22
                         6:25    6:28    6:31
M   000145'     2:56     1:21
L   000104'     2:20     2:09
O   000251'     4:18     3:42
```

```
   1
2/77
                                        ;"SETDMA",F,N
                                        ;F=START ADDRESS
                                        ;N=NO. OF 16 BIT WORDS(BASE 10)
                                        ;PRIMES THE DMA CONTROLLER OF LAD (44)
                            .NREL
       000001               .TXTM   1
                            .TITL   PRIME
                            .ENTM   .CALL,RETURN,GET,GETC,PUT
00000' 000027' NEXT.        NEXT1
00001' 177777  -1
00002' 177777  -1
00003' 177777  -1
00004' 177777  -1
00005' 177777  -1
00006' 177777  -1
00007' 151705               .TXTF   "SETDMA"
00010' 152004
00011' 146701
00012' 000000
00013' 177777  SETDMA:      .CALL
00014' 177777               GET
00015' 044410               STA     1,F
00016' 066044               DOB     1,44                ;SEND START ADDRESS
00017' 000013'              .CALL
00020' 000014'              GET
00021' 044405               STA     1,N
00022' 065044               DOA     1,44                ;SEND NO. OF WORDS
00023' 000017'              .CALL
00024' 177777               RETURN
00025' 000001  F:           .BLK    1
00026' 000001  N:           .BLK    1
                                        ;
                                        ;"CORMAP",F1,P1,S1
                                        ;F1=FIRST STORAGE WORD AVAILABLE
                                        ;P1=NO. OF PROTECTED WORDS AT TOP OF CORE
                                        ;S1=SIZE OF CORE
                                        ;
                                        ;"CORMAP" FETCHES F1,P1,S1 FROM DDOS
00027' 000065' NEXT1:       NEXT2
00030' 177777  -1
00031' 177777  -1
00032' 177777  -1
00033' 177777  -1
00034' 177777  -1
00035' 177777  -1
00036' 141717               .TXTF   "CORMAP"
00037' 151315
00040' 140720
00041' 000000
00042' 000023'              .CALL
00043' 177777               GETC
00044' 040444               STA     0,AC0
00045' 044444               STA     1,AC1
00046' 050444               STA     2,AC2
00047' 024441               LDA     1,AC0
00050' 102400               SUB     0,0
00051' 000042'              .CALL
00052' 177777               PUT                         ;PUT  F1
```

```
:   2
2/77
00053' 024436            LDA     1,AC1
00054' 102400            SUB     0,0
00055' 000051'           .CALL
00056' 000052'           PUT                             ;PUT  P1
00057' 024433            LDA     1,AC2
00060' 102400            SUB     0,0
00061' 000055'           .CALL
00062' 000056'           PUT                             ;PUT  S1
00063' 000061'           .CALL
00064' 000024'           RETURN
                                 ;
                                 ;"LOAD",A2,W2
                                 ;A2=CORE ADDRESS OF WORD TO BE STORED
                                 ;W2=WORD TO BE STORED
                                 ;
                                 ;LOADS WORD  W2  INTO LOCATION   A2
00065' 000113' NEXT2:    NEXT3
00066' 177777  -1
00067' 177777  -1
00070' 177777  -1
00071' 177777  -1
00072' 177777  -1
00073' 177777  -1
00074' 146317            .TXTF   "LOAD"
00075' 140704
00076' 000000
00077' 000063' LOAD:     .CALL
00100' 000020'           GET                             ;GET ADDRESS
00101' 044410            STA     1,AC1                   ;STORE ADDRESS
00102' 000077'           .CALL
00103' 000100'           GET                             ;GET WORD
00104' 034405            LDA     3,AC1                   ;LOAD ADDRESS
00105' 045400            STA     1,0,3                   ;STORE (AC1) AT (AC3)
00106' 000102'           .CALL
00107' 000064'           RETURN
00110' 000001  AC0:      .BLK    1
00111' 000001  AC1:      .BLK    1
00112' 000001  AC2:      .BLK    1
                                 ;"CDUMP",A3,N3
                                 ;A3=FIRST ADDRESS OF BLOCK
                                 ;N3=NO. OF WORDS IN BLOCK
                                 ;
                                 ;
                                 ;"CDUMP"   LOADS A BLOCK OF CORE ONTO
                                 ; A FILE CALLED   DATA
                                 ;THE PREVIOUS CONTENTS OF DATA ARE LOS
00113' 000201' NEXT3     :NEXT4
00114' 177777  -1
00115' 177777  -1
00116' 177777  -1
00117' 177777  -1
00120' 177777  -1
00121' 177777  -1
00122' 141704            .TXTF   "CDUMP"
00123' 152715
00124' 150000
00125' 000106' STDUMP:   .CALL
00126' 000103'           GET
```

```
PAGE    3
13/12/77
 1   00127' 044442            STA     1,STRTAD
 2   00130' 000125'           .CALL
 3   00131' 000126'           GET
 4   00132' 044440            STA     1,BLKSIZ
 5   00133' 102400  CREATE:   SUB     0,0
 6   00134' 105000            MOV     0,1
 7   00135' 030436            LDA     2,.FNAME
 8   00136' 034441            LDA     3,DOOS
 9   00137' 007400            JSR     @D.CYS,3
10   00140' 000011            D.CRT
11   00141' 102400  OPEN:     SUB     0,0
12   00142' 024436            LDA     1,.BUFFP
13   00143' 030430            LDA     2,.FNAME
14   00144' 034433            LDA     3,DOOS
15   00145' 007400            JSR     @D.CYS,3
16   00146' 000007            D.ORN
17   00147' 050431  DUMP:     STA     2,.BUFFP
18   00150' 034427            LDA     3,DOOS
19   00151' 022420  LOOP1:    LDA     0,@STRTAD
20   00152' 007410            JSR     @D.OUT,3
21   00153' 022416            LDA     0,@STRTAD
22   00154' 101300            MOVS    0,0
23   00155' 007410            JSR     @D.OUT,3
24   00156' 010413            ISZ     STRTAD
25   00157' 014413            DSZ     BLKSIZ
26   00160' 000771            JMP     LOOP1
27   00161' 030417            LDA     2,.BUFFP
28   00162' 034415            LDA     3,DOOS
29   00163' 007400            JSR     @D.CYS,3
30   00164' 000013            D.EOF
31   00165' 007400            JSR     @D.CYS,3
32   00166' 000010            D.CLO
33   00167' 000130'           .CALL
34   00170' 000107'           RETURN
35   00171' 000001  STRTAD:   .BLK    1
36   00172' 000001  BLKSIZ:   .BLK    1
37   00173' 000174' .FNAME:   FNAME
38   00174' 042101  FNAME:    .TXT    *DATA*
39   00175' 052101
40   00176' 000000
41   00177' 035455  DOOS:     035455
42   00200' 000001  .BUFFP:   .BLK    1
43          000201' NEXT4=.
44                             .END
```

SYMBOL VALUE DEFINED REFERENCES

```
AC0     000110'     2:36     1:52   1:55
AC1     000111'     2:37     1:53   2:01   2:29   2:32
AC2     000112'     2:38     1:54   2:05
BLKSI   000172'     3:36     3:04   3:25
CREAT   000133'     3:05
DOOS    000177'     3:41     3:08   3:14   3:18   3:28
DUMP    000147'     3:17
F       000025'     1:30     1:22
FNAME   000174'     3:38     3:37
GET           'X    1:08     1:21   1:25   2:28   2:31   2:58   3:03
GETC          'X    1:08     1:31
LOAD    000077'     2:27
LOOP1   000151'     3:19     3:26
N       000026'     1:31     1:26
NEXT    000000'     1:09
NEXT1   000027'     1:39     1:09
NEXT2   000065'     2:17     1:39
NEXT3   000113'     2:47     2:17   2:47
NEXT4   000201'     3:43     2:47
OPEN    000141'     3:11
PUT           'X    1:08     1:58   2:04   2:08
RETUR         'X    1:08     1:29   2:10   2:35   3:34
SETDM   000013'     1:20
STDUM   000125'     2:57
STRTA   000171'     3:35     3:01   3:19   3:21   3:24
.BUFF   000200'     3:42     3:12   3:17   3:27
 CALL         'X    1:08     1:20   1:24   1:28   1:50   1:57   2:03   2:07
                              2:09   2:27   2:30   2:34   2:57   3:02   3:33
 FNAM    000173'     3:37     2:07   3:13
```

APPENDIX 4

Circuit Diagrams

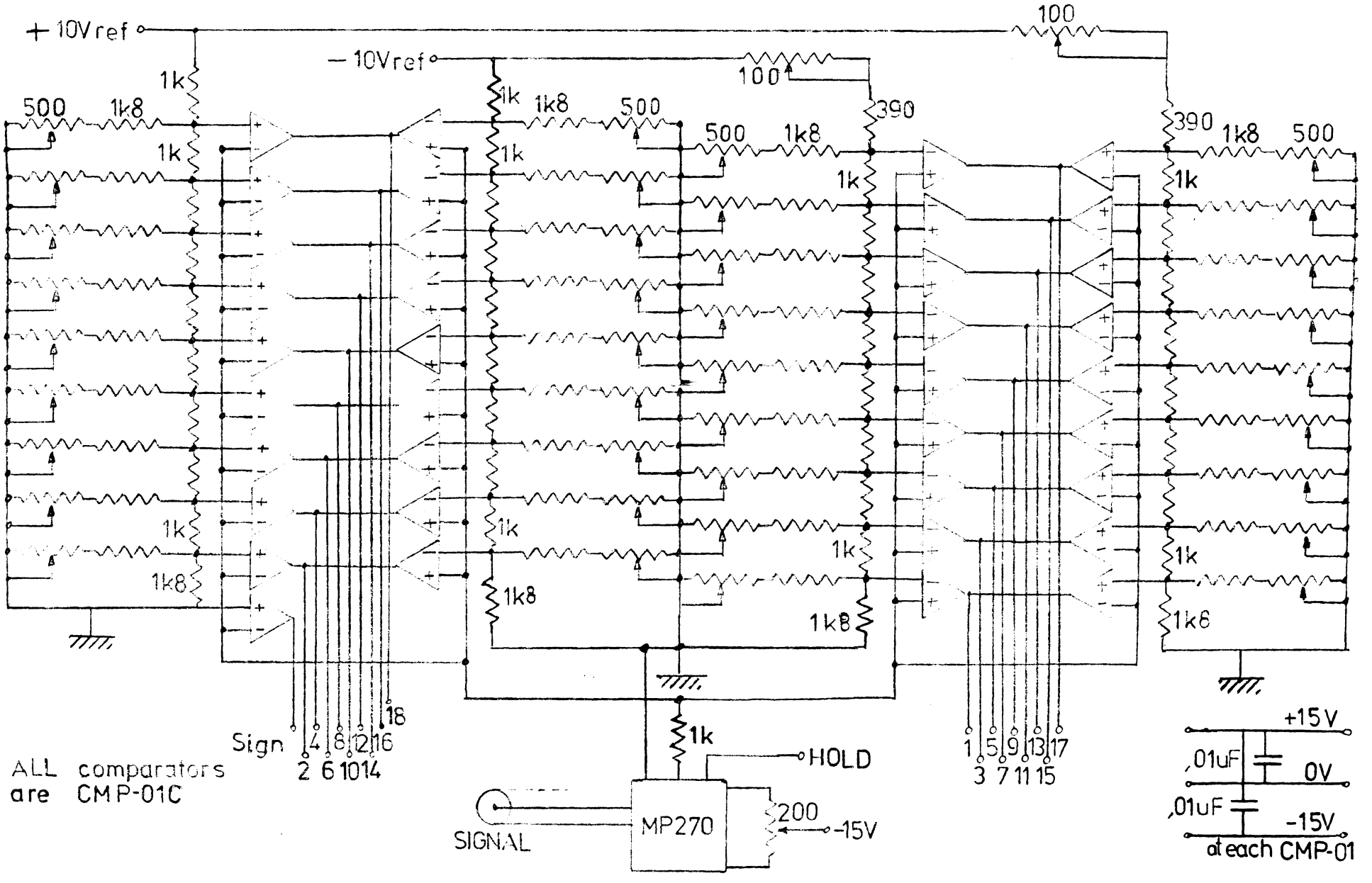

FIG A4.1 HIGH SPEED LOG A/D

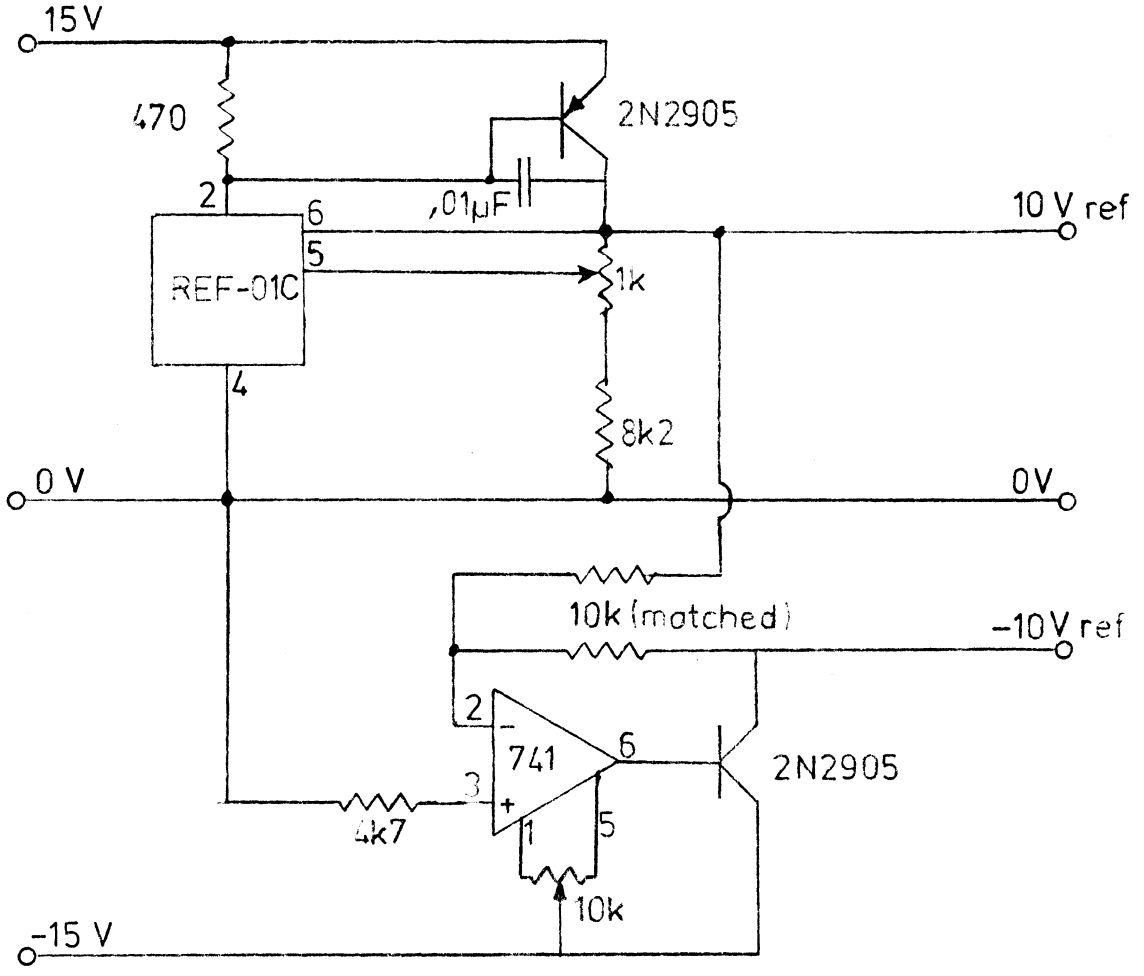

FIG A4.2 VOLTAGE REFERENCE

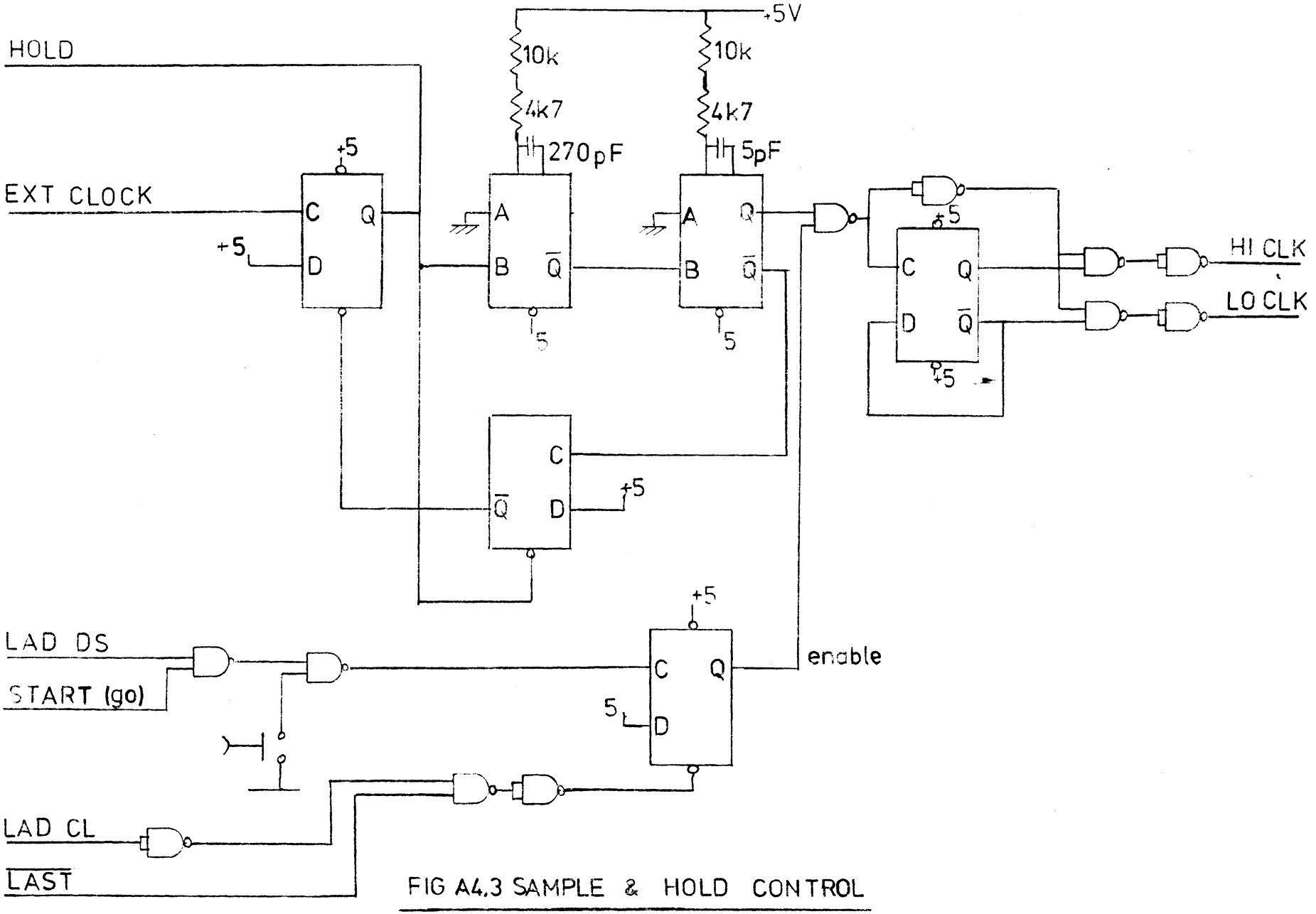

FIG A4.3 SAMPLE & HOLD CONTROL

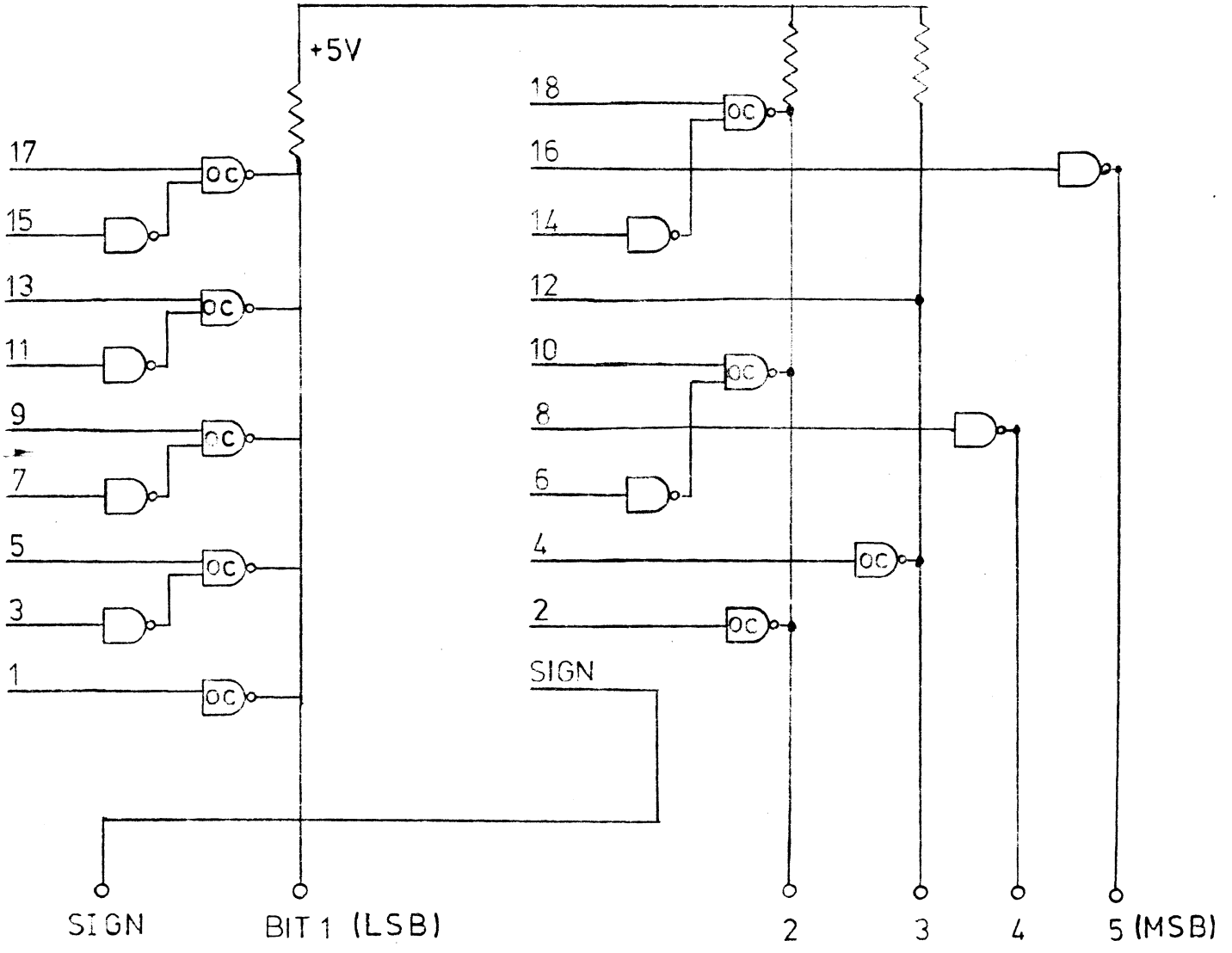

FIG A4.4 GRAY ENCODE CIRCUIT

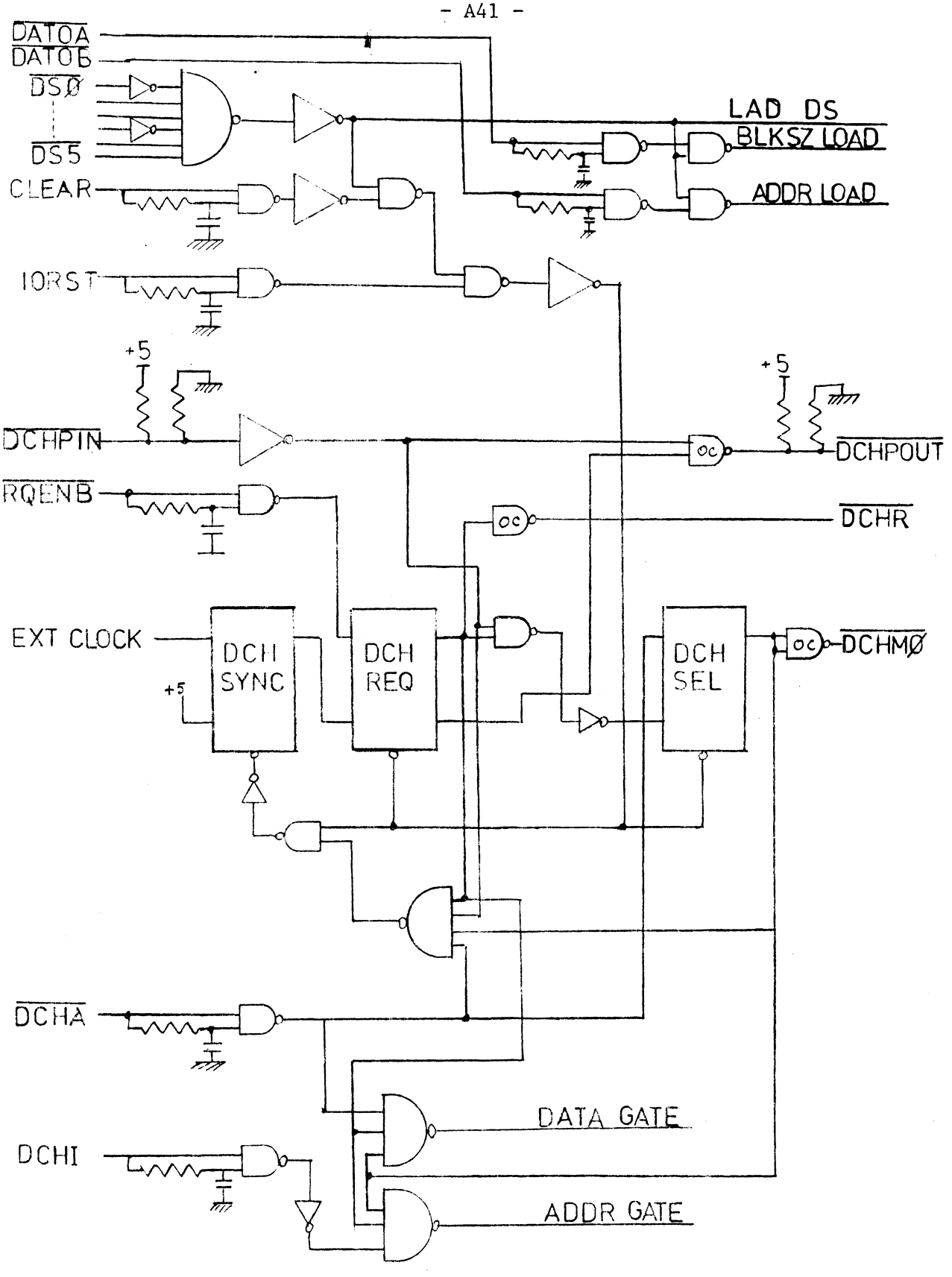

FIG A4.5 DATA CHANNEL CONTROL

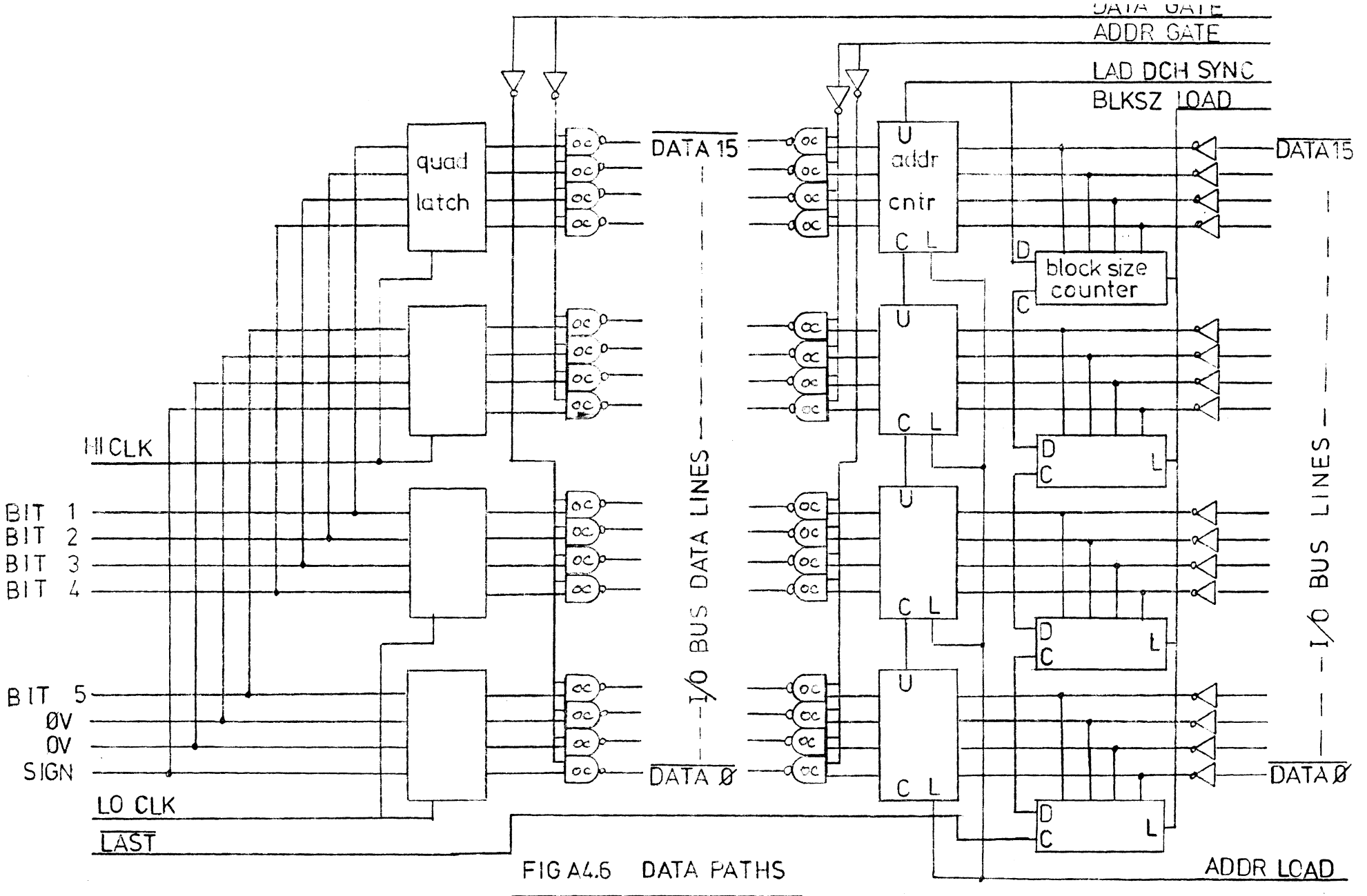

FIG A4.6 DATA PATHS

APPENDIX 5

DESIGN OF A SOUND SOURCE SUITABLE FOR MODELLING

1. INTRODUCTION

A paper by Watters (A1) describes various instrumentation techniques used in modelling. He concludes that the simplest non-directional sound source is an electric spark source. Veneklasen (A2) described a sound source that consisted of a small spark gap fixed about once a second. In the same paper he described a sound source consisting of intersecting jets of air. Four jets are used and he now uses nitrogen instead of air, probably because the model is tested in a nitrogen atmosphere to reduce air absorption. The advantage of the jet stream source is that it can be continuous but this benefit is not required in this work and so it was decided to use an electric spark source.

2. MICROPHONE NOISE LEVELS

In order to establish the required sound output of the source it was first necessary to measure the circuit noise of the microphone and preamplifier combination. The microphone used was a B + K 4135 $\frac{1}{4}$" condenser microphone and the preamplifier was a B + K 2619 preamplifier. The combination was connected through a B + K amplifier and B + K 1614 filter set and then to a B + K 2307 chart recorder. The results are shown in fig. A5.1. The test was done in a dead room and repeated with the microphone replaced by a 6,5pf capacitor. The results were very similar.

3. SOUND SOURCE

The sound source consisted of a4U F capacitor changed to approximately 2,2kV. The capacitor was charged by a simple half-wave rectifier and the voltage was controlled with a variable autotransformer. The spark was triggered by a lower energy spark from an induction coil of the type found in motor car ignition circuits. This was also used to start the converter.

The electrodes were at first made of steel but this was burnt away by the spark and the electrodes were changed to 2mm pencil leads. The gap between the electrodes was 5mm. The circuit of the spark source is shown in figure A2.

4. OUTPUT POWER

The sound source was tested for output power and directionality in the dead room at a distance of 0,3m. This distance was chosen as it represented a similar distance to that between the microphone and sound source in the model of the reverberation room. The variation in output power was found to be less than 2dB in all directions.

The output sound pressure level of the sound source is shown in figure A3 together with the circuit noise level of the microphone and preamplifier. It can be seen that between 2kHz and 125kHz the signal to noise ratio is greater than 50dB peak. This would therefore provide a sufficient signal for the model and converter.

Bibliography

A1) WATTERS, B.G. 'Instrumentation for Acoustic Modelling, Journal of the Acoustic Society of America, 47, No. 2, 1970, pp 412-418.

A2) See ref. 11 in main Bibliography.

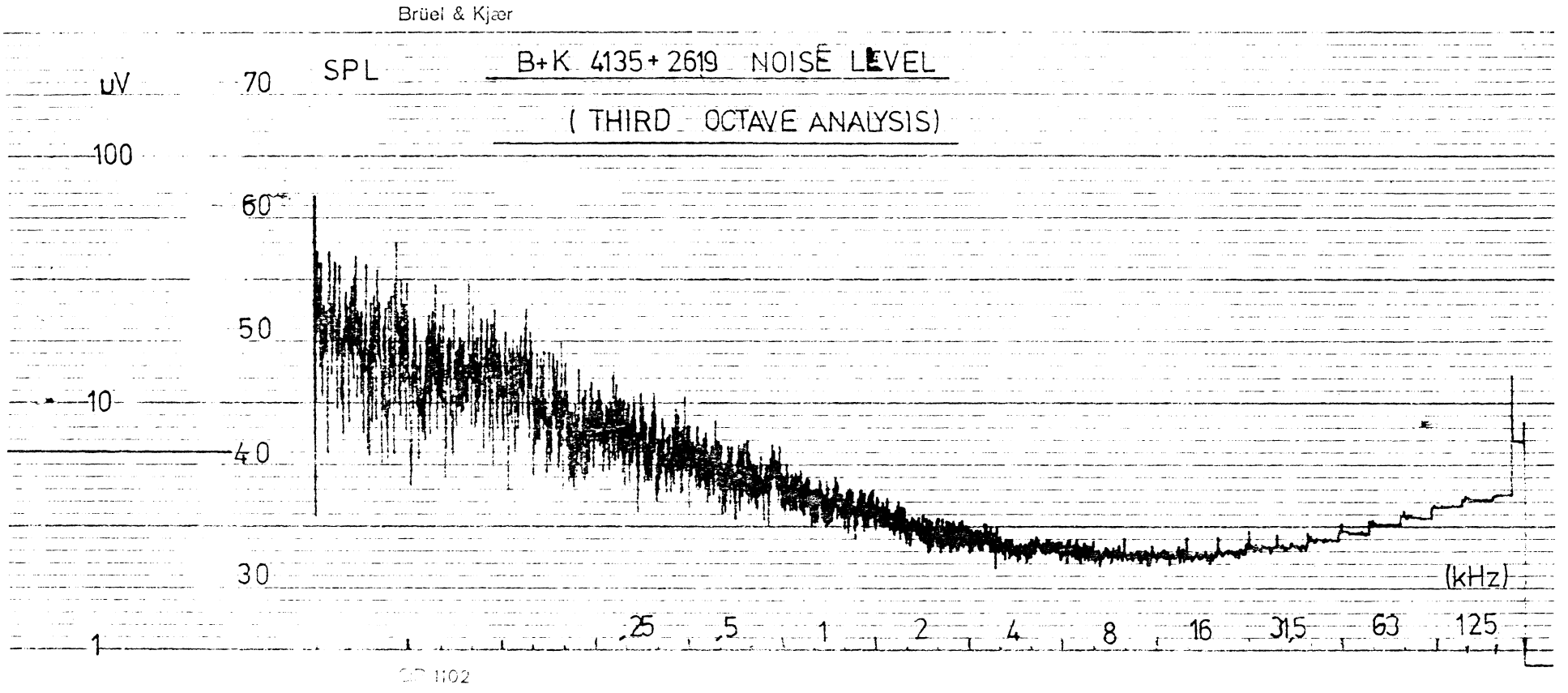

Figure A5.1 Microphone noise level

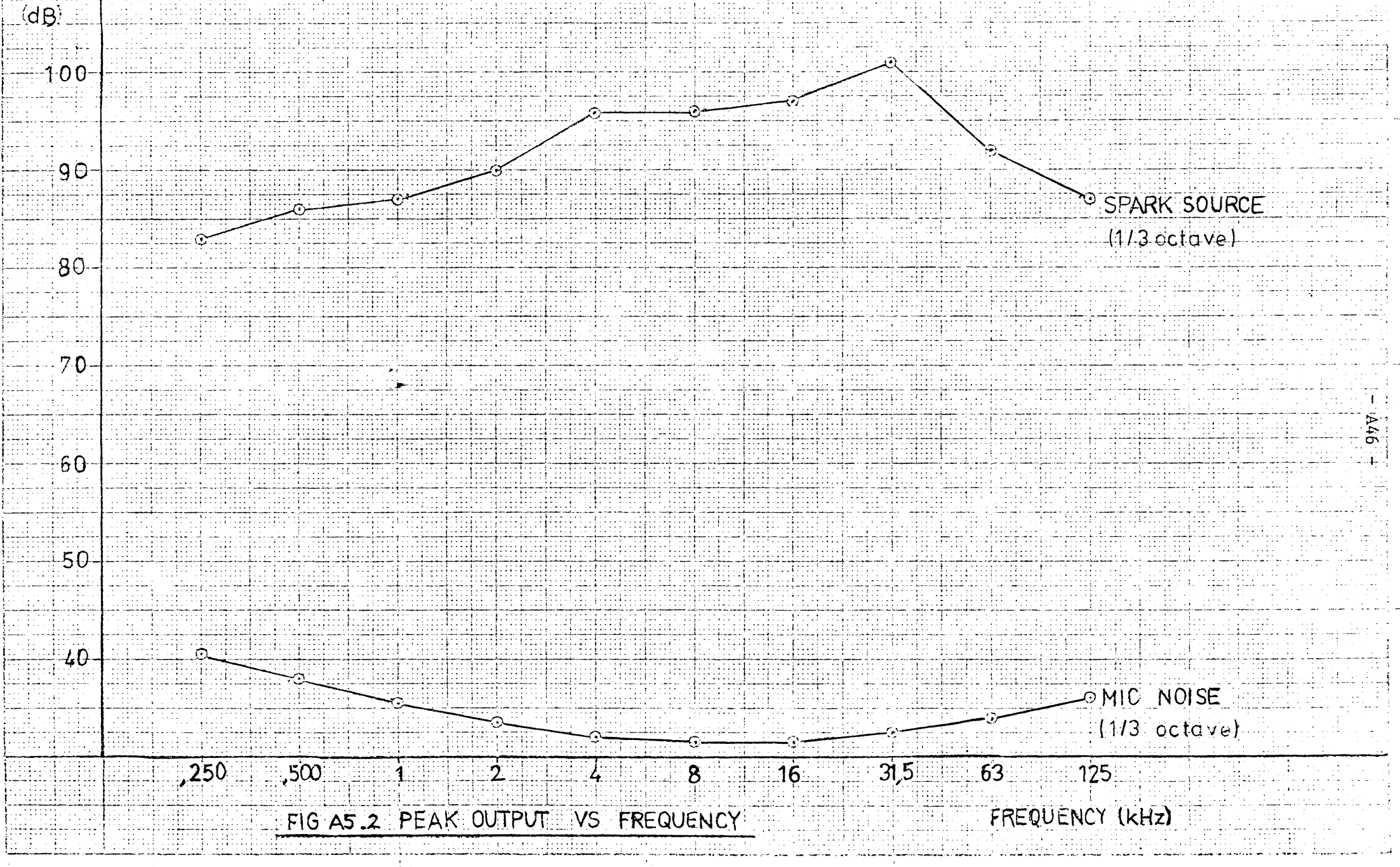

FIG A5.2 PEAK OUTPUT VS FREQUENCY