

https://dspace.org/

The predictors of consumer purchase intention of imported wines among generation Y consumers in South Africa

Ndlela, Thubelihle Namaswazi

2018
https://hdl.handle.net/10539/27030
Ndlela, Thubelihle Namaswazi, (2017) The predictors of consumer purchase intention of imported wines among "Generation Y"consumers in South Africa, University of the Witwatersrand, Johannesburg, https://hdl.handle.net/10539/27030

Downloaded from a DSpace repository. https://dspace.org/



THE PREDICTORS OF CONSUMER PURCHASE INTENTION OF IMPORTED WINES AMONG GENERATION Y CONSUMERS IN SOUTH AFRICA

THUBELIHLE NAMASWAZI NDLELA

1372735

A THESIS

Submitted in full fulfilment of the requirements for the degree of

DOCTOR OF PHILOSOPHY

(Marketing)

Supervisor

Professor Richard Chinomona

Co-supervisor

Dr Marike Venter de Villiers

2017

DECLARATION

I, Thubelihle Namaswazi Ndlela hereby declare that this thesis is my own work. This research paper (thesis) is submitted in fulfilment of the requirements for the Doctor of Philosophy degree in the division of Marketing in the School of Economic and Business Sciences in the Faculty of Commerce, Law and Management at the University of the Witwatersrand, Johannesburg South Africa.

In addition, I declare that:

1. I am aware that plagiarism (the use of someone else's work without their permission and/or without acknowledging the original source) is an academic offence.
2. Where external sources have been used, all have been acknowledged by means of appropriate in-text citation and added to the list of references.
3. This thesis has not been submitted before for any degree or examination at this or any other University**.**
4. I recognise that it was my responsibility to conduct this research in an ethical manner and according to the guidelines of the University of the Witwatersrand.



ACKNOWLEDGEMENTS

I wish to express my heartfelt and deepest gratitude to my supervisors, Prof. Richard Chinomona and Dr Marike Venter-de Villiers for their assistance, encouragement and constructive criticism in producing this thesis. I have learnt so much from them throughout this journey. I appreciate their open door policy and their willingness to assist and mentor me to the very end. I would also like to thank Prof Jannie Roussow, our head of the School of Economic and Business Sciences (SEBS), who offered me financial support through a bursary in my 2nd year when I was ready to quit due to financial constraints. I would also like to thank Dr Helen Duh, who also supported and mentored me, particularly with her knowledge of Generation Y.

In addition, I would like to thank my parents, Kay and Myra Ndlela, for affording me the opportunity to study further, being a source of encouragement and also believing in my dreams. Thank you for always encouraging me to aim for excellence in everything that I do. I am well supported and truly grateful for you cheering me on throughout this journey.

Last, but not least, thank you my lovely friends Bekithemba, Gugu, Feziwe, Thoko and Ntombezinhle, for the words of encouragements, and support throughout this journey. Last, a special thank you to Nugi, for being a brother, friend and sound-board.

DEDICATION

This PhD thesis is dedicated to my parents, Mr Kay and Mrs Myra Ndlela. Ngiyabonga mama lobaba (Thank you mom and dad, your support and encouragement is truly appreciated).

ABSTRACT

There is general global acknowledgement that the consumption of wine brands is on the increase. Several studies on the antecedents of purchase intention of imported wine have been conducted, particularly in western countries. A case in point is a recent surge in the purchase of both local and international wine brands in South Africa. However, it is not yet clear what has motivated the purchase intentions of international wine brands in South Africa – hence this study.

Informed by the identified research gap and a dearth of literature that has investigated this subject matter – especially in developing countries such as South Africa, the current study sought to examine the predictors of imported wine purchase intention by South Africans. In particular, the study investigates the influence of brand tribalism, brand love, brand credibility and brand preference as predictors of purchase intention. Hence, it is of particular interest to investigate the factors that influence consumers' purchase intention of imported wine brands, particularly among Generation Y consumers in South Africa.

In order to achieve the study's objectives, eight hypotheses were postulated – informed by the proposed conceptual model. The predictor variable was brand tribalism, while brand love, brand credibility, brand preference acted as mediating variables, and purchase intention as the outcome variable. In order to test the proposed hypotheses, the study used a sample size of 321 respondents between the ages of 18 and 38, and the online questionnaire was administered using Qualtrics software. The data was analysed using SPSS for descriptive statistics and AMOS 24 for the Structural equation modelling approach. The results indicate that three of the hypotheses were supported and significant. More specifically, brand tribalism has a positive significant relationship with brand love and brand preference, while brand credibility has a positive significant relationship with purchase intention.

The findings of the present study have significant contributions to theory, context and practice. Firstly, it adds new literature to the existing body of knowledge, particularly on international wine marketing, consumer behaviour and Generation Y. Secondly, it provides more insights on the application of theories such as social identity, consumer culture theory in the context of the wine industry. Finally, the study has practical implications for international wine firms and marketing practitioners. International wine marketing managers can draw insights into the predictors of consumer purchase intention of imported wine brands amongst Generation Y consumers – and subsequently develop strategies that appeal to Generation Y consumers in South Africa.

Keywords*: Brand Tribalism, Brand Love, Brand Credibility, Brand Preference, Purchase Intention, Imported Wine, Generation 'Y'*

TABLE OF CONTENTS

DECLARATION ..... **i**

ACKNOWLEDGEMENTS ..... **ii**

DEDICATION ..... **iii**

ABSTRACT ..... **iv**

LIST OF TABLES ..... **xiv**

LIST OF FIGURES ..... **xv**

1 CHAPTER 1: OVERVIEW OF THE STUDY **1**

1.1 Introduction and Background to the Study *1*

1.2 Problem Statement and Research Gap *2*

1.3 Purpose of the Study *6*

1.4 Research objectives *6*

1.4.1 Theoretical Objectives 6

1.4.2 Empirical Objectives 7

1.4.3 Research Questions 7

1.5 Empirical Literature *7*

1.6 Research Methodology *8*

1.6.1 Research Design 9

1.6.2 Sampling Design 10

1.6.3 Research Population 10

1.6.4 Sampling Frame 10

1.6.5 Sample Size 11

1.6.6 Measurement Instrument and Questionnaire Design 11

1.6.7 Data Collection Technique 12

1.6.8 Data Analysis 13

1.6.9 Testing For Validity and Reliability 13

1.7 Significance and Contribution of the Study *14*

1.8 Ethical Considerations *14*

1.9 Research Limitations *15*

1.10 Chapter Outline *15*

1.11 Chapter summary *16*

2 CHAPTER 2: RESEARCH CONTEXT 18

2.1 Introduction *18*

2.2 Global Wine Industry *18*

2.3 Challenges Facing Wine Producers *20*

2.4 Background on the South African Wine Industry *20*

2.5 Wine Marketing and Tourism *25*

2.6 Sustainability of the Wine industry *26*

2.7 An overview of South African Values *28*

2.8 Generational Theory *31*

2.9 Generation Y *32*

2.9.1 Importance of Generation Y to marketing practitioners 35

2.9.2 Consumer Buying Behaviour of Generation Y 37

2.9.3 Generation Y and Wine Consumption 38

2.10 Chapter Summary *40*

3 CHAPTER 3: THEORETICAL GROUNDINGS AND EMPIRICAL LITERATURE 41

3.1 Introduction *41*

3.2 History of the Consumer Culture Theory *41*

3.2.1 Consumer Culture Theory 42

3.2.2 Importance of the Theory 43

3.2.3 Motivation for Using Consumer Culture Theory 43

3.3 History of Social Identity Theory *45*

3.3.1 Importance of Social Identity theory 46

3.3.2 Motivation for using the Social Identity theory in the Study 46

3.4 History of the Aspiration-Choice based theory *47*

3.4.1 Aspiration-Based Choice Theory 47

3.4.2 Importance of Aspiration-Based choice Theory 49

3.4.3 Motivation of using the aspiration-choice based theory 49

3.5 Empirical Literature *50*

3.5.1 Background on Brand Tribalism 50

3.5.2 Existing Research on Brand Tribalism 53

3.5.3 Tribal Marketing 53

3.5.4 Characteristics of Consumer Tribes 55

3.5.5 Building Consumer Tribes in Marketing 56

3.5.6 Benefits and Challenges of Tribal Marketing 56

3.5.7 Tribalism, Brands and Symbolic Consumption 59

3.6 Background on Brand Love *60*

3.6.1 Definitions of Brand Love 61

3.7 The Concept of Brand Love *64*

3.8 Conceptualisation of Brand Love *64*

3.8.1 Characteristics of Brand Love 66

3.8.2 Brand Love versus Brand Attachment versus Satisfaction 67

3.8.3 Antecedents of Brand love 70

3.8.4 Benefits of Brand love to Marketing practitioners 72

3.8.5 Other Research on Brand Love 75

3.8.6 Brand Love and Wine 75

3.9 History of Brand Preference *76*

3.9.1 Brand Preference Definitions 77

3.10 Benefits of Brand Preference for Marketing Managers *78*

3.11 Conceptualisation of Brand Preference *79*

3.11.1 Antecedents of Brand preference 79

3.11.2 Outcomes and Benefits of Brand Preference 84

3.11.3 Related Studies Research 85

3.11.4 Brand Preference and Wine 86

3.12 History of brand credibility *87*
3.12.1 Definitions of Brand Credibility 87
3.12.2 Importance of Brand Credibility 89
3.12.3 Signalling Theory and Brand Credibility 91
3.12.4 Merits of Brand Credibility 92
3.12.5 Conceptualisation of brand credibility 94
3.12.6 Antecedents of Brand Credibility 96
3.12.7 Related Studies on Brand Credibility 97
3.13 History of Purchase Intention *98*
3.14 Definitions of Purchase Intentions/Behaviour *99*
3.15 Importance of Purchase Intentions to Marketing Managers *100*
3.16 Conceptualisation of Purchase Intention *100*
3.17 Antecedents of Purchase Intention *101*
3.17.1 Consumer Feelings 101
3.17.2 Brand Awareness 101
3.17.3 Loyalty 102
3.17.4 Product Quality 102
3.17.5 Price 103
3.17.6 Brand Image 103
3.18 Purchase Intention and International brands *103*
3.18.1 Country of Origin (COO) 104
3.18.2 Culture 104
3.19 Purchase Intention and Wine *105*
3.20 Chapter Summary *107*
4 CHAPTER 4: PROPOSED CONCEPTUAL MODEL AND HYPOTHESIS DEVELOPMENT 108
4.1 Introduction *108*
4.2 Proposed Conceptual Model *108*
4.3 Brand Tribalism and Brand Love (Hypothesis 1) *109*

4.4 Brand Tribalism and Brand Preference (Hypothesis 2) *112*

4.5 Brand Tribalism and Brand Credibility (Hypothesis 3) *113*

4.6 Brand Love and Brand Preference (Hypothesis 4) *115*

4.7 Brand Preference and Purchase Intention (Hypothesis 5) *117*

4.8 Brand Credibility and Brand Preference (Hypothesis 6) *119*

4.9 Brand Credibility and Purchase Intention (Hypothesis 7) *121*

4.10 Brand Love and Purchase Intention (Hypothesis 8) *122*

4.11 Chapter Summary *125*

5 CHAPTER 5: RESEARCH DESIGN AND METHODOLOGY 126

5.1 Introduction *126*

5.2 Research Philosophy *126*

5.2.1 Ontology 126

5.2.2 Epistemology 127

5.3 Research Approach *131*

5.4 Research Strategies *132*

5.5 Research choices *133*

5.5.1 Justification of a quantitative approach 133

5.6 Sampling selection *134*

5.6.1 Probability Sampling Techniques 134

5.6.2 Non Probability Sampling Techniques 135

5.6.3 Motivation for a non-probability sampling technique 135

5.6.4 Population of Interest 136

5.6.5 Sampling Frame 136

5.6.6 Sample Size 136

5.7 Design of the Measurement Instrument *137*

5.8 Data Collection Technique *138*

5.9 Measurement scale *138*

5.9.1 Independent (predictor) variable 139

5.9.2 Mediating variables 139
5.9.3 Outcome Variable 140
5.9.4 Pretesting the Instrument (Pilot study) 141
5.9.5 Editing and coding 141
5.10 Data Analysis *141*
5.10.1 Descriptive statistics 142
5.10.2 Reliability and Validity of the Measurement Instrument 142
5.11 Validity *142*
5.11.1 Convergent Validity 143
5.11.2 Discriminant Validity 143
5.12 Confirmatory Factor Analysis *144*
5.12.1 Model Fit Indices 144
5.13 Path modelling and hypotheses testing *145*
5.14 Ethical considerations *146*
5.15 Chapter Summary *147*
6 CHAPTER 6: PRESENTATION OF RESULTS 148
6.1 Introduction *148*
6.2 Data Screening and Cleaning *148*
6.3 Data Analytical Procedures *149*
6.4 Statistical Analytical Procedures *149*
6.5 Demographic Statistics *150*
6.5.1 Gender of the Respondents 151
6.5.2 Age of the Respondents 152
6.5.3 Geographic Location of Respondents 153
6.6 Summary of Likert Scale Results *157*
6.6.1 Brand Tribalism 157
6.7 Descriptive Statistics for Brand love *158*
6.8 Descriptive Statistics for Brand Preference *159*

6.9 Descriptive Statistics for Brand Credibility *160*

6.10 Descriptive statistics for Purchase Intention *160*

6.11 Assessment of normality *162*

6.12 Measurement Instrument Assessment (Confirmatory Factor Analysis) *163*

6.13 Testing for Reliability *163*

6.13.1 Cronbach Alpha 163

6.13.2 Composite Reliability CR 164

6.14 Testing for Validity *168*

6.14.1 Convergent Validity 168

6.14.2 The Item-Total Correlation 169

6.15 Discriminant validity *169*

6.16 Confirmatory Factor Analysis (Measurement Model) *172*

6.17 Model fit Indices (CFA) *172*

6.17.1 Summary of Model Fit Indices for CFA. 174

6.18 Structural Model Testing *174*

6.19 Path Modelling and Hypotheses testing *175*

6.20 Structural Model (Conceptual Model) *178*

6.21 Summary of hypotheses results *178*

6.21.1 H1: There is a positive relationship Brand Tribalism and Brand Love. 178

6.21.2 H2: There is a positive relationship between Brand Tribalism and Brand Preference 179

6.21.3 H3: There is a positive relationship between Brand Tribalism and Brand Credibility. 179

6.21.4 H4: There is a positive relationship between Brand Credibility and Brand Preference 179

6.21.5 H5: There is a positive relationship between Brand Love and Brand Preference 179

6.21.6 H6: There is a positive relationship between Brand Preference and Purchase Intention 180

6.21.7 H7: There is a positive relationship between Brand credibility and Purchase intention 180
6.21.8 H8: There is a negative relationship between Brand Love and Purchase Intention 180

6.22 Chapter Summary 181

7 CHAPTER 7: DISCUSSION OF FINDINGS 182

7.1.1 Wine purchasing frequency 182
7.1.2 Region-of-origin 182

7.2 Main findings 183
7.2.1 Brand Tribalism and Brand Love 183
7.2.2 Brand Tribalism and Brand Preference (Hypothesis 2) 185
7.2.3 Brand Tribalism and Brand Credibility (Hypothesis 3) 186
7.2.4 Brand Love and Brand Preference 187
7.2.5 Brand Preference and Purchase Intention 188
7.2.6 Brand Credibility and Brand Preference 189
7.2.7 Brand Credibility and Purchase Intention 190
7.2.8 Brand Love and Purchase Intention 191

7.3 Chapter summary 193

8 CHAPTER 8: CONCLUSIONS AND RECOMMENDATIONS 194

8.1 Introduction 194

8.2 Overview of study's objectives 194

8.3 Conclusion of main findings 194
8.3.1 Influence of Brand Tribalism on Brand Love 195
8.3.2 Influence of Brand Tribalism on Brand Preference 195
8.3.3 Influence of Brand Tribalism on Brand Credibility 195
8.3.4 Brand Love and Brand Preference 196
8.3.5 Influence of Brand Preference and Purchase Intention 196
8.3.6 Influence of Brand Credibility and Brand Preference 196
8.3.7 Influence of Brand Credibility and Purchase Intention 197
8.3.8 Influence of Brand Love on Purchase Intention 197

8.4 Contributions *198*
8.4.1 Conceptual Contribution 198
8.4.2 Theoretical Contribution 198
8.4.3 Practical Contribution and Managerial Implications 199
8.5 Limitations and recommendations for future research *203*
8.5.1 Recommendation for future research 203
8.6 Overall conclusions *204*
8.7 Chapter Summary *205*
References **206**
Appendices **246**
Appendix 1: Participant Information Sheet *246*
Appendix 2 ..... *251*
Appendix 3 ..... *252*

LIST OF TABLES

Table 1.1: Definitions of Research Constructs* 8
Table 2.1: Global wine producing countries in 2015 19
Table 2.2: Geographic distribution of South African wine grape vineyards per wine region in 2014. 23
Table 2.3: SWOT analysis of the South African wine industry 26
Table 3.1: Definitions of the psychological dimensions of brand love and the interpersonal antecedents of brand love 63
Table 5.1: Quality in positivist and interpretivist research 128
Table 5.2: Comparison of four research philosophies in management research 130
Table 5.3: Major differences between deductive and Inductive approaches to research 131
Table 5.4: Summary of key features of research strategies 132
Table 5.5: Differences between qualitative and quantitative research 133
Table 6.1 Sample Demographic Profile summary 150
Table 6.2: Educational Level of Respondents 152
Table 6.3: Imported Wine Purchase Frequency 154
Table 6.4: Region/Country of Origin of Preferred Imported Wine Brand 154
Table 6.5: Cross Tabulation for Age and Gender 155
Table 6.6: Gender * Education Cross Tabulation 155
Table 6.7: Gender * Source Cross Tabulation 155
Table 6.8: Age * Source Cross Tabulation 156
Table 6.9: Age * Purchase Frequency Cross Tabulation 156
Table 6.10: Descriptive analysis for Brand Tribalism 157
Table 6.11: Descriptive Analysis for Brand Love 158
Table 6.12: Descriptive Analysis for Brand Preference 159
Table 6.13: Descriptive Analysis for Brand Credibility 160
Table 6.14: Descriptive Analysis for Purchase Intention 161
Table 6.15: Assessment of Normality 162
Table 6.16: Brand Tribalism 163
Table 6.17: Brand Love 164
Table 6.18: Brand Preference 164
Table 6.19: Brand Credibility 164
Table 6.20: Purchase Intention 164
Table 6.21: Reliability and Validity of Brand Tribalism 165
Table 6.22: Validity and Reliability of Brand Love 166

Table 6.23: Validity and Reliability of Brand Preference 166
Table 6.24: Validity and Reliability for Brand Credibility 167
Table 6.25: Validity and Reliability for Purchase Intention 167
Table 6.26: The Item-Total Correlation 169
Table 6.27: Correlation Matrix 170
Table 6.28: Highest Shared Variance (SV) and Average variance Extracted (AVE) 171
Table 6.29: Average Variance Extracted and Highest Shared Variance 171
Table 6.30: Criteria for Model Fit, Description and Acceptance Levels 173
Table 6.31: Chi-square ($\chi 2$ /DF) 173
Table 6.32: Baseline comparison Index 174
Table 6.33: Summary of Model Fit Indices for Measurement Model 174
Table 6.34: Model fit results (Structural model) 175
Table 6.35: Hypotheses results and Coefficients 176

LIST OF FIGURES

Figure 4.1: Proposed Conceptual Model 109
Figure 6.1: The Statistical Analytical Procedures 149
Figure 6.2: Gender of Respondents 151
Figure 6.3: Age of the Respondents 152
Figure 6.4: Structural Model 178

CHAPTER 1: OVERVIEW OF THE STUDY

1.1 Introduction and Background to the Study

The global wine industry is a rapidly growing market and practitioners are seeking ways to attract wine consumers, both domestically and internationally. The wine industry produces at least three billion cases of wine annually, while there are about one million wine producers on a global scale (Kierath and Wang, 2013). In contrast, the local wine landscape has proved to yield competitive levels of success. For instance, it has grown by 7.7 % (over the period of 2014-2015) and has contributed to 1.2 % of the country's GDP (SAWIS, 2015). Consumption of wine in South Africa grew by 7 % to reach 4.2mhl (million hectolitres) in 2015 (Wesgrow, 2017).

Consequently, there is a pertinent need to investigate the motivations for buying imported wine brands in order to guide marketers to create effective strategies to target their consumers. As such, gaining in-depth knowledge of the drivers behind purchase intention will provide wine marketers with insight into the use of differentiation strategies when positioning their brands (Engelbrecht, Herbst and Bruwer, 2014). Standing out from a variety of other wine brands will therefore have a tremendous impact on a brand's success.

Previous studies on imported wine consumption has merely touched on country-of-origin (Drennan, Bianchi, Cacho-Elizondo and Loureiro, 2015; Verdonk et al., 2017: Hu et al., 2008; Jimenez and Martin, 2010; Felzensztein, 2005), wine knowledge and brand trust as predictors of imported wine purchase activity (Bente et al., 2012; Bruwer and Buller, 2012; Baek et al., 2010; Hu et al., 2008). Furthermore, other studies investigated wine experience, brand love, brand satisfaction as antecedents of wine brand loyalty (Drennan et al., 2015). Subsequently, other studies focused on Generation Y and wine consumer behaviour (Peskett, 2011; Charter, Velikova, Ritchie, Fountain, Thach, Dodd, Fish, Herbst and Terblanche, 2011; Chrysochou, Krystallis, Mocanu and Lewis, 2012; Pomarici and Vecchio, 2014).

The principal aim of this thesis is to investigate the predictors of imported (foreign) wine brands among Generation Y in South Africa. In recent years, Generation Y consumers (those individuals born between 1979 and 1999) have been regarded as one of the core wine drinking consumer segments, and thus have contributed significantly to the wine industry

(Peskett, 2006; VinIntell, 2013). In fact, this generation is known for drinking almost three glasses of wine daily (VinIntell, 2013). This significant characteristic that proves that this cohort are regular wine consumers which provides a platform for international wine marketers to successfully target this market. In addition, this segment is crucial for contributing to the growth of the global wine market (Bruwer, 2002).

The rest of this chapter presents the problem statement. Thereafter, the research gap, and the objectives of the study are provided. In addition, an overview of the research methodology is provided. Furthermore, this chapter outlines the contributions, ethical considerations, limitations, thesis structure and finally, the summary of the chapter.

1.2 Problem Statement and Research Gap

Despite the fact that South Africa currently ranks eighth in the top ten best wine producing countries in the world, there is also a considerable amount of international wine brands entering the South African wine market (Wesgrow, 2017). These wine imports mainly come from old world wine producing countries such as Italy, France and Spain and a few from new world producing countries such as the United States, Chile, and Australia (Euromonitor, 2016). This sudden interest in imported wine is possibly due to intense global competition, flexible trade agreements and the financial viability of exporting, consumers' increased exposure to a wide variety of international brands. This raises competition between local and international wine marketers, thus understanding the different wine purchase intention drivers becomes vital.

A number of studies investigated Generation Y wine buying behaviour, particularly in the western countries (Peskett, 2011; Charters et al., 2011; Chrysochou, Krystallis, Mocanu and Lewis, 2012; Pomarici and Vecchio, 2014). More specifically, a study explored the differences in wine preferences between Generation Y and older cohorts in the USA. The findings revealed that Generation Y consumers attach more importance to attributes such as attractive front label and promotional display in store while older cohorts prefer other attributes such as grape variety and acquired wine knowledge.

Furthermore, another study evaluated Italian Generation Y consumer interest and willingness to buy three wines with specific labels certifying environmental, social and ethical attributes, namely a carbon neutral wine, wine produced on land confiscated from a criminal

organisation, and wineries that donate money to African institutions that combat AIDS (Pomarici and Vecchio, 2014). Findings revealed that the label related to social features (Libera Terra) obtains the highest patronage rate (almost 75% of respondents). Furthermore, results reveal that living in an urban area, being female and older, significantly increases the probability of buying sustainable wines (Pomarici and Vecchio, 2014). Sustainability in the wine industry entail firms partaking in environmentally safe practises that preserve the environment and ecosystem (Christ and Burritt, 2013).

Kennett-Hensel, Neeley and Min (2011) postulate that Generation Y consumers have the potential to equal and exceed their parents wine consumption which thus justified and heightened wine marketers' interest. Moreover, in order to establish and grow the potential success of wine brands amongst Generation Y, it is vital for marketers to be aware of their needs, preferences, beliefs and behaviour (Bester, 2012). Generation Y constitutes approximately 38 per cent of the population in South Africa (Statistics South Africa, 2015). Further, this Generation has become the new wine market that presents a significant opportunity for marketers (VinIntell, 2013).

In addition, other studies have examined drivers of consumer purchase intention of imported wine, mostly in western countries, such as Country of Origin or Region of Origin (Chung and Pysarchick, 2009). For instance, numerous studies have validated that country-of-origin is indeed a predictor of consumer purchase intention of imported wine (Verdonk et al., 2017; Engelbrecht, Herbst and Bruwer, 2014 Hu et al., 2008; Jimenez and Martin, 2010; Felzensztein, 2005). In particular, one research conducted in Australia on sparkling wine purchase preference revealed that country or region of origin (COO/ROO), particularly French brands, was found to be an important factor across all four focus groups (Verdonk et al., 2017). In addition, it was found that sparkling wine of French origin was perceived in a very positive manner by many participants (Verdonk et al., 2017).

Moreover, the great majority of the studies on international wine marketing have focused on wine knowledge and brand trust as determinants of consumer behaviour (Drennan et al., 2015; Bente et al., 2012; Bruwer and Buller, 2012; Baek et al., 2010; Hu et al., 2008). There is limited knowledge available about younger consumers' preferences for domestic or imported wine (Mueller, Remaud and Chabin, 2011). Additionally, few studies have specifically investigated the predictors of purchase intention of international wines in Africa

and specifically, South Africa. This therefore exposes a gap in academic literature on Generation Y and purchase intention of international wine brands.

Charters (2005) found that the consumption of sparkling wine has more symbolic than experiential significance and precisely that the role of memory and recollection may be important for some consumers. Moreover, luxury brands such as wine generally symbolise the social status of individuals especially among younger consumers, preference for luxury brands are closely related to their images of success (Hwang and Kandampully, 2012). Following this assertion, it is important useful to extend this study to a South African context, particular investigating the predictors of imported wine purchase among Generation Y consumers.

Other international studies investigated consumption of imported wine in Portugal and China respectively (Duarte, Madeira and Barreira, 2010; Li et al., 2008). Findings from this research demonstrated that despite some similarities, young adults in Portugal, particularly those under twenty-four years of age, show significant dissimilarities on their motivation to purchase wine (Duarte et al., 2010). Lack of similar studies in South Africa necessitates the need for one to be conducted. The present study is one of the first studies in South Africa to investigate consumer purchase intention towards imported wine brands. Nonetheless, a study revealed that South African consumers are not loyal to brands or country of origin but are willing to pay a premium for their alcoholic beverages, women consume and make the most purchase decisions (SAWIS, 2011). In addition, South Africa is an emerging market, a powerhouse in Africa with diverse cultures (rainbow nation), hence the researcher is likely to unravel interesting findings.

The few studies that exist in South Africa primarily focus on domestic consumption or exports (Ndanga et al., 2008; Sousa and Bradley, 2008; Ponte and Ewert, 2009; van Rooyen et al., 2011). In addition, another study examined how South African wine SME's geographically located in a culturally rich and unique bio-diverse wine route location, market their wines (Vink and Alant, 2013). In addition, another study investigated climate change and the future of the South African wine industry; they found that although industry systems should allow for speciality wine marketing, this is not viable for most wine producers (Vink, Deloire, Bonnardot and Ewert, 2012). Speciality wines in this context refers to wines from single vineyard or single estate (Vink et al., 2012). Subsequently, Heyns, Herbst and Bruwer

(2014) examined the acceptance and relevance of green wines in South Africa, they found that green wines were perceived as fashionable and trendy but were least likely to play a significant role in the wine prices. Green wines are wines produced in environmentally friendly practices, this could also include the packaging (Heyns et al., 2014).

On the other hand, a few studies have specifically examined Generation Y in South Africa. Lategan, Pentz, du Preez (2017) found that taste was the most important wine attribute, followed by recommendations by others for Generation Y consumers in South Africa. In contrast, alcohol percentage and information on the back label are the least important wine selection attributes (Lategan et al., 2017). Furthermore, a study investigated and compared the engagement of Generation Y wine consumers in five Anglophone countries; they established resemblances and trans-cultural similarities between consumption behaviour, particularly that sparkling wine is a women's drink, and is a separate category from still wine, and that they will grow into drinking it, but also noticeable differences in the status of champagne and attitude towards wine (Charters et al., 2011). This therefore, confirms the gap in academic research on imported wines and Generation Y in South Africa.

Moreover, there is limited research that has investigated how contemporary branding constructs such as brand love, brand tribalism, can predict consumers purchasing intention for imported wines in South Africa. Correspondingly, the researcher proposes a model that takes elements from existing theories such as social identity and consumer culture. Nonetheless, these theories fail to incorporate brand love which is a contemporary marketing construct and brand credibility which is deemed vital in wine purchase decisions (Carroll and Ahuvia, 2006). These variables are incorporated into the conceptual model in order to make the study suitable for a South African and wine purchase intention context. Moreover, the present study proposes a unique conceptual model that has not been tested before, particularly in a wine context.

Despite the substantial market potential of Generation Y, academic research on South African imported wine consumption and purchase intention is scarce. In order to fulfil the identified gaps in literature, the purpose of the present study addresses a number of objectives. First, to investigate the predictors of consumers' purchase intention of imported wine brands among Generation Y consumers in South Africa. Second, the research also identifies possible

effective marketing practices that could possibly stimulate purchase intentions towards imported wine brands in South Africa.

Moreover, this study examines contemporary branding constructs such as brand love and brand tribalism and conceptualises these constructs to a wine context. Furthermore, the conceptual model developed offers an empirical decision-making framework that is easy to use and generalisable in international wine research contexts. Examining purchase intention through brand tribalism, brand love, brand preference, brand credibility can provide valuable advice to the international wine producers targeting Generation Y consumers. Therefore, understanding how the aforementioned branding constructs predict imported wine purchase intentions among Generation Y in South Africa is a priority concern.

1.3 Purpose of the Study

The purpose of the study is to investigate the relationship between brand tribalism (predictor variable) and purchase intention (outcome variable) of imported wine brands amongst Generation Y in South Africa. The study specifically focused on imported wine brands wines from old wine producing countries such as France, Italy and Spain, due to the fact that the bulk of imported wine consumed in South Africa is imported from Old wine producing countries (Euromonitor, 2016; Sikuka, 2015). More so, there is a general bias towards international wine brands from the aforementioned regions, consumers perceive them as premium brands (Verdonk, Wilkinson, Culbert, Ristic, Pearce, Wilkinson, 2017).

1.4 Research objectives

The objectives of this study consist of theoretical and empirical objectives listed in the succeeding section.

1.4.1 Theoretical Objectives

Theoretical objectives are formulated to provide a deeper understanding of the antecedents of consumer purchase intention of imported wine brands based on existing literature. The section below presents theoretical objectives for the study, these objectives are discussed in detail the literature chapters 2, 3, 4;

- To evaluate the scope and contributions of the wine industry in South Africa and globally;
- To evaluate literature on Generation Y and their wine buying behaviour;

- To develop a conceptual model which outlines the relationship between the predictors of consumer purchase intention of imported wine brands in South Africa;
- To describe a suitable research design and methodology for carrying out research, analysing, interpreting and presenting research of the research to fulfil empirical objectives and finally
- Discuss findings, draw insightful conclusions, contributions and make recommendations for future research.

1.4.2 Empirical Objectives

- To investigate the influence of brand tribalism on brand love
- To ascertain the influence of brand tribalism on brand preference
- To determine the relationship between brand tribalism and brand credibility
- To investigate the influence of brand credibility on consumer purchase intention.
- To examine the relationship between brand love and consumer purchase intention.
- To investigate the influence of brand preference on consumer purchase intention.
- To determine if there is any relationship between brand love and brand preference.
- To ascertain whether or not brand preference has a relationship with brand credibility.

1.4.3 Research Questions

- To what extent does brand tribalism influence brand love?
- To what extent does brand tribalism influence brand preference?
- To what extent does brand tribalism influence brand credibility?
- To what extent does brand preference influence brand credibility?
- To what extent does brand preference affect purchase intention?
- To what extent does brand love influence consumer purchase intention?
- To what extent does brand credibility influence consumer purchase intention?

1.5 Empirical Literature

This section provides brief definitions of the research constructs used in the study. The constructs of interest include brand tribalism, brand love, brand credibility and purchase intention. Subsequently, a comprehensive review of the theoretical groundings and empirical literature on the aforementioned constructs is presented in chapter three.

Table 1.1: Definitions of Research Constructs*

Variable	Definition and source
Brand Tribalism	Brand tribalism designates a community of individuals formed on the base of emotional attachment to a brand or product (Cova and Cova, 2002).
Brand Love	Brand love is defined as a marketplace phenomenon that describes a deep or intense emotion that consumers experience towards a certain brand (Shimp and Madden, 1988; Carroll and Ahuvia, 2006).
Brand Preference	Brand preference is the choice of a product or service of a certain brand made by customers when consumers face similar kind of products or service (Tsai, Chang and Ho, 2015).
Brand Credibility	Brand credibility is defined as the believability of product or service position information contained in a brand (Sweeney and Swait, 2004).
Purchase Intention	Purchase intention is the consumer's willingness to buy a given product at a specific time or situation (Lu, Chang and Chang, 2014).

* Compiled by the researcher.

1.6 Research Methodology

The methodology section provides a theoretical background of research methodologies that are used for the study and further provides justifications for selecting certain methods. This section provides a summary of the research design, sampling techniques, measurement instrument, data collection and data analysis.

There are five research philosophies available to researchers namely; positivism, interpretivism, pragmatism, realism and post modernism (Saunders et al., 2009). However, positivist and interpretivist are the two common philosophies (Saunders et al., 2009; Creswell, 2009). The present study adopts a positivist research philosophy, mainly because it examines the relationship between independent and dependent variables.

The deductive and inductive are the two research approaches available to researchers (Saunders et al., 2009). Saunders et al. (2009) argue that a deductive approach aims to explain the causal relationship between the variables and has a structured methodology to facilitate results that can be generalisable (Saunders et al., 2009). On the other hand, an

inductive approach is the opposite of deductive research; with this approach, the researcher develops hypotheses and theories with the objective to explaining empirical observations from the real world (Crowther and Lancaster, 2009). The current study follows a deductive research approach in which it tests hypotheses that are derived from existing theory.

1.6.1 Research Design

A research design or plan is a detailed blueprint used to guide a marketing research study towards its objectives (Aaker et al., 2004). A survey is the research strategy and is usually associated with a deductive approach (Saunders et al., 2009). Therefore, it was deemed as the appropriate research strategy for the present study.

In addition, this study adopts a quantitative methods approach. This is a methodology that involves the collection of scientific data that is precise and based on measurement and is often analysed using statistics with the intention that the findings can be generalisable (Collins, 2010). Most importantly, the scientific method involves a cycle of investigation, including the following stages: observation, identification of underlying patterns and generating a theory, forming a hypothesis, conducting research to test the hypothesis, and accepting or rejecting the theory (Grafstrom, 2010). Moreover, quantitative research method was used to investigate the relationship between the research constructs.

The present study is exploratory, using quantitative methods to solicit data required for research. Hair et al. (2009) argue that quantitative data collection methods emphasise formal, structured questioning techniques among large numbers of respondents, with predetermined response options by the researcher. The main purpose of quantitative research designs is to detect and predict relationships between market factors, to gain insight into these relationships, and to validate existing relationships (Hair et al., 2009). A quantitative approach is deemed suitable for the current study because the study aims to investigate the relationships between the following research variables; brand tribalism, brand love, brand preference, brand credibility and purchase intention. Ultimately, this study examines to what extent the aforementioned constructs are antecedents of imported wine purchase intention amongst Generation Y in South Africa. An online questionnaire hosted on Qualtrics was utilised to collect data from the research participants.

1.6.2 Sampling Design

The design of samples is a particularly important aspect of survey methodology, and provides a basis for the sound measurement of economic and social phenomena from surveys of businesses and households (Aaker et al., 2004). Researchers can either adopt probability or non-probability sampling techniques depending on the study's research objectives. This study followed a non-probability sampling techniques mainly because there was no precise sampling frame of wine consumers in South Africa. Furthermore, non-probability sampling techniques allow researchers to select samples based on subject judgement (Saunders et al., 2009). This study specifically followed a two stage sampling approach, firstly judgemental sampling where the researcher selected respondents that consume and are knowledgeable about imported wine. This was followed by snowball sampling technique where research respondents referred other wine consumers to the survey in order to improve the survey response rate.

1.6.3 Research Population

A research population is the total collection elements from which a researcher aims to make inferences for a given study (Sekaran and Bougie, 2010). The target population in this study refers to the entire group of interest that the researcher aims to investigate. Furthermore, the population element is the individual participant or object on which the measurement is taken, it is the unit of study (Cooper et al., 2005). A research population is the total collection elements from which a researcher aims to make inferences for a given study (Sekaran and Bougie, 2010). It is for this reason that the researcher drew a sample from the population of 6 234 727 wine drinkers in South Africa (SAWIS, 2015).

1.6.4 Sampling Frame

A list of all units from which a population is drawn is represented by a sample frame (Bryman, 2012). The sampling frame consisted of the list of the student researcher' Facebook, Twitter, email and Instagram contacts who are of legal drinking age and who consume wine and also reside in South Africa.

1.6.5 Sample Size

Hair, Black, Babin and Anderson (2010) posit that robust statistical analysis, such as structural equation modelling, should use a sample size of at least five times the number of constructs to ensure the maximum likelihood of estimation. For the purposes of this study, the sample size was determined using the sample size Raosoft® calculator. Raosoft is statistical software that is used to calculate sample size. Raosoft takes into account the following factors; the margin of error, the confidence level, the population size and the response distribution. The student researcher used a margin of error at 5%, confidence level at 95% population size of 6 234 727 and a response distribution of 50%. The appropriate sample size is 385, however the researcher proposed to use five hundred (500) wine drinkers from her Facebook, Twitter, and Instagram and e-mail contacts. The AMOS Software requires a minimum of 250 respondents for analysis. Therefore, this sample was deemed sufficient for the Amos software that the researcher chose to employ. Precisely, the study respondents were selected from all nine provinces in South Africa. Nonetheless, the majority of the respondents reside in Gauteng, Western Cape and KwaZulu-Natal which are the top three wine consuming regions in South Africa (SAWIS, 2011).

1.6.6 Measurement Instrument and Questionnaire Design

A questionnaire is a pre-formulated written set of questions on which respondents record their answers, usually with relatively closely defined alternatives. Mostly, questionnaires are the preferred data collection tool where large numbers of people are targeted in different geographic regions (Sekaran and Bougie, 2010). In addition, questionnaires are a popular method of data collection because researchers are able to obtain information fairly easily and questionnaire responses are easily coded (Sekaran and Bougie, 2010). The principles of questionnaire design relate to how questions are worded and measured and how the questionnaire is organised (Sekaran and Bougie, 2010). Furthermore, questionnaires are deemed as the appropriate data collection tool for this study since the researcher knows exactly what is required and how to measure the variable of interest. In the current study, the measuring instrument was designed by drawing from literature in relation to the constructs being tested. The existing scales were then operationalised to suit the wine context.

Research scales were operationalised on the basis of previous peer reviewed work. Proper modifications were made in order to fit the current research context and purpose. “Purchase

intention" used a five item Likert scale adapted from Bolton and Drew (1991). "Brand preference" used a five item Likert scale adapted from Liu and Chang (2009). "Brand credibility" used a five item Likert scale adapted from Ederm, Swait and Louviere (2002). "Brand tribalism" used a five item Likert scale adapted from Veloutsou and Moutinho (2009). Lastly, "brand love" used a five item Likert scale adapted from Carroll and Ahuvia (2006). All the measurement items were measured on a five-point Likert-type scale that was anchored by 1= strongly disagree to 5= strongly agree to express the degree of agreement.

There are several advantages of using online surveys. First, conducting research online saves time and money. Second, online surveys allow the researcher to reach for a larger number of participants over a shorter period of time in comparison to other survey methods (Duffy, Smith, Trthanian and Brener, 2005). Third, Taylor (2000) argues that the use of online surveys allow for more visual, flexible and interactive research especially in comparison with telephone surveys. Fourth, online surveys do not require the interviewer to be present, thus eliminating the possibility for interviewer bias (Duffy et al., 2005). Nonetheless, like with any data collection technique, online surveys have limitations, for example, the researcher can only use respondents who have internet access, and that online respondents answer scales differently from other conventional modes of research (Duffy et al., 2005). Last but least, online surveys run the risk of low response rates (Duffy et al., 2005).

1.6.7 Data Collection Technique

For the purposes of this study, the researcher utilised the online survey method in order to collect the primary data. The questionnaire was hosted on Qualtrics and a link was forwarded to the researcher's wine drinking Facebook, Twitter, Instagram and email contacts in South Africa. The researcher had a pre-screening question which basically ascertained that potential respondents were wine consumers or drinkers. Only people who consume wine were deemed suitable for the study.

The quantitative data collection method was used due to the fact that it provides results that are easy and simple to summarise, compare, evaluate, and generalise. Quantitative research follows a scientific method usually descriptive in nature and helps the researcher to determine causal relationships between variables, and the data can be interpreted using statistical analysis (Berndt and Petzer, 2013). This study utilised an online survey method. Prior to this, in order to ensure the fitness of purpose, language, wording, sequence and layout of the

questionnaire, pilot testing was conducted (Serra et al., 2012). First, thirty (30) conveniently selected individuals with different educational backgrounds participated in the pilot study in order to examine the questionnaire for difficulties, ambiguities, and face validity of the measures. Thereafter, amendments and adjustments were made to the questionnaire.

1.6.8 Data Analysis

The study made use of both descriptive and inferential statistics to summarise, organise and simplify the data. Data analysis initially begins with a process of preparing data. This process ensures that the accuracy of the data and their conversion from raw forms into classified appropriate data will make it simpler for data analysis. Questionnaires with errors or incomplete items were discarded. In this study, data analysis was conducted using SPSS version 24 and Amos version 24, which is an extension of SPSS. AMOS is primarily designed for structural equation modeling (SEM), path analysis, and covariance structure modelling (Kaplan, 2009).

Structural equation modeling (SEM) is a statistical methodology used for hypotheses testing to analyse structural theory that is based on some phenomenon (Hair et al., 2010). Several aspects set it apart from older generations of multivariate procedures. Firstly, it takes a confirmatory approach rather than an exploratory approach to the data analysis (Bryne, 2013). More so, contrary to most other multivariate procedures that are incapable of assessing or correcting for measurement error, SEM provides explicit estimates of possible error variance parameters (He, Gai, Wu and Wan, 2012:853). In essence, SEM procedures can incorporate both unobserved and observed variables (Qureshi and Kang, 2014: Bryne, 2010). Finally, there are no widely and easily applied alternative methods for modeling multivariate relations (Bryne, 2013). Given these desirable characteristics, SEM has become a popular methodology for non-experimental research (Kaplan, 2009. Further, path modelling was done to test the fit of the correlation matrix.

1.6.9 Testing for Validity and Reliability

The reliability of the scale refers to the extent to which the scale produce consistent results when being re-used (Hair et al., 2009). The reliability and validity of the measuring instrument was tested using the Measurement Model Assessment (CFA). For instance, reliability was tested using the Cronbach's alpha value, Average variance extracted and

Composite reliability. A Cronbach Coefficient Alpha is used to assess the reliability of the scales that are used in the questionnaire, with reliability confirmation of a value higher than 0.7 (Hair et al., 2009). In addition, measurement of convergent validity was tested by using item loading value and average variance extracted (AVE). Discriminant validity was measured using Average value extracted (AVE) and shared value (SV). Furthermore, another measure for evaluating discriminant validity was done by observing whether the AVE value is greater than the highest shared variance (SV) value (Nusair and Hua, 2010). In a positivist study, the validity in quantitative research is mainly concerned with whether a measurement of a concept fundamentally measures what it is designed to measure (Bryman, 2012).

1.7 Significance and Contribution of the Study

This study's contribution is three fold, namely, theoretical, practical and contextual. Firstly, this current study adds to the limited existing literature in a number of fields such as, branding, consumer behaviour, psychology and international wine marketing. Furthermore, the present study aimed to provide academics with a better understanding of the determinants or predictors of customer purchase intentions towards foreign or imported wine. In addition, this study seeks to add to the extant body of literature on brand tribalism and brand love, specifically focused on international wine marketing in the South African context.

Secondly, findings derived from this study will assist international marketing practitioners create consumer focused marketing strategies that influence brand love, brand tribalism and ultimately drive purchase in a country that favours locally produced wine. Lastly, the current study highlights the key branding constructs that significantly influence behaviour and create competitive advantage.

Thirdly, while previous studies on consumption of imported wine have been conducted internationally, especially in developed countries, the present study investigated predictors of consumer purchase intention and branding constructs among Generation Y consumers in South Africa. The contributions are thoroughly presented in chapter eight.

1.8 Ethical Considerations

First and foremost, ethical clearance was approved by the University of Witwatersrand ethics committee prior to launching the survey to respondents. Second, participants who agreed to take part in the study were informed that all information would be kept strictly confidential.

Third, prior to completing the survey, participants were required to complete a consent form that was attached on the information sheet explaining the purpose and the conditions of taking part in the survey. Fourth, participation in this study was completely voluntary and respondents were informed of their right to withdraw at any stage of the research.

In addition, the data will not be sold to a third party, and it will be used solely for academic purposes. All questionnaires are anonymous, and the study did not expose the potential participants to any harm. Furthermore, no personal information, such as phone numbers, was solicited from respondents. Finally, all data gathered during the data collection period was kept between the supervisor and the student researcher in a password protected computer. This section is explored in detail in chapter five (research methodology).

1.9 Research Limitations

Sekaran and Bougie (2010) define a limitation as any factor in a study that may hinder the research process and thus provide inaccurate results. There are a number of factors that can distract a research process from obtaining accurate findings. Like any other research study, there are bound to be limitations. However, possible limitations should be minimised as far as possible. The first limitation of the study was that online surveys are known to have very low response rates compared to other data collection techniques such as face-to-face, telephonic interviews and self-administered surveys. In order to overcome this, the researcher hosted the survey questionnaire for six months (March 2016-October 2016) in order to reach as many research respondents as possible. Additionally, the researcher encouraged participation by sending reminders on Facebook and email bi-weekly to participants to complete the survey. Moreover, the current study was conducted within a limited time frame, hence time constraints may hinder the quality of the results.

1.10 Chapter Outline

The study is organised in eight chapters;

- **Chapter one** introduces the research background, identifies the research problem, identification of the research gap and justification, objectives, purpose and research questions for the study. Thereafter, the contribution and significance, ethical considerations and research limitations are outlined.

- **Chapter two** outlines a detailed context of the current study. It commences with an overview of the global wine industry in order to give a perspective in which South Africa competes. In addition, the South African wine industry is discussed. Thereafter, the Generation Y market segment is discussed in a global context and narrowed down to a South African context. Lastly, Generation Y wine consumer behaviour is discussed.
- **Chapter three** begins with a presentation of three theories that underpin the study and the motivation for using them. In addition, a review of literature of each variable or construct is presented. This covers definitions, conceptualisation, importance and related studies that investigated the variable.
- **Chapter four** provides a discussion of the proposed conceptual model and the development of the hypotheses of the study. In addition, an extensive review of the literature on the hypothesised relationships is presented.
- **Chapter five** outlines the research design and methodology. Firstly, it begins with the research philosophy underpinning the study. Secondly, the research design is presented in the following sections; sampling design, sampling techniques, instrument design, data collection and data analysis techniques.
- **Chapter six** presents the findings of the study that entail the demographic variables analysed using SPSS version 24 and the hypothesised relationships of the variables analysed using AMOS version 24.
- **Chapter seven** provides a discussion of demographic findings of the study. Thereafter, the main findings are discussed. Specifically, results of the accepted and rejected hypotheses proposed in this study are discussed.
- **Chapter eight** outlines the key findings of the study by providing conclusions after which theoretical, and practical limitations of the study are discussed. Last, but not least, recommendations for future research are presented.

1.11 Chapter summary

This chapter gave an overview of the current study. Initially, the problem statement, purpose of the research, research objectives and justification of the study were presented. In addition, the research methodology and design are presented. Thereafter, significance and contribution of the study are discussed. Subsequently, ethical considerations and limitations pertaining

research were discussed. The following chapter provides an account of the South African research context, including a discussion of the global and local wine industry, followed by a discussion of Generation Y consumer behaviour.

CHAPTER 2: RESEARCH CONTEXT

2.1 Introduction

This chapter sets out to outline and provide a discussion of the South African wine industry. Nonetheless, it begins with an overview of the global wine industry in order to provide a perspective in which the South African wine industry competes. Furthermore, the role of branding and sustainable wine industry practices are discussed. Thereafter, the second part of this chapter unpacks the Generation Y cohort in a global context and finally narrows this down to a South African context. Lastly, Generation Y and wine consumption is discussed.

2.2 Global Wine Industry

According to Kierath and Wang, (2013), there are more than one million wine producers in the world, producing approximately 2,8 billion cases of wine annually and the consumption is at about three billion annually. Notably, the United States wine industry has rapidly increased production and sales growth annually, between 2003 and 2012 from 268.8 million cases and $22.3 billion to 360.1 million cases and $34.6 billion respectively (Wine Institute, 2013). This according to Wine Institute, (2013) represents a 34% increase in production and a 55.2% increase in sales, while Australia has a record of 2500 wine businesses. Perhaps as a result of recognition, a considerable number of wine firms that includes multinationals, and even SMEs are now competing for a portion of this lucrative wine market (Qenani-Petrela et al., 2007).

More so, as also noted by Qenani-Petrela, Wolf and Zuckerman, (2007), the increase in the number of wine producers in the industry has led to an increase in the consumption of wine globally. Furthermore, empirical findings seem to demonstrate that wine consumption has grown progressively in the United States over the last decade, with current statistics depicting that 34.3% of adults over the age of 21 consume wine with a per capita consumption rate of 11 l (Wine Market Council, 2010). Buttressing the same notion, Hussain, Chlolette and Castldi, (2008), suggest that United States wine consumption has increased steadily in the past years, and consumers were found to prefer imported wines (Hussain, Chlolette and Castldi, 2008). The same growth in wine consumption has been witnessed in South Africa. It is estimated that win consumption I South Africa has increased to 7% (Wesgrow, 2017). In

particular, (VinIntell, 2013, notes that, Generation Y has arguably started moving along an interest and adoption curve before becoming core wine drinkers.

Thus, there is mounting pressure in this competitive industry to foster wine interest among consumers that are arguably showing an increased interest in a variety of wine and are spending significant amounts on wine purchases (Charter et al., 2011). Generation Y and wine consumption is discussed in a later section (section 2.9.3) in more detail. The subsequent paragraph presents statistics on the wine production in the leading wine producing countries in the world.

Table 2.1: Global wine producing countries in 2015

Unit 1000hl	2010	2011	2012	2013	2014	2015 Forecast	2015/2014 Variation in volume	2015/2014 Variation in %	Ranking
Italy	48525	42772	45616	54029	44229	48869	4640	10%	1
France	44381	50757	41548	42134	46804	47373	569	1%	2
Spain	35353	33397	31123	45308	33211	36600	-1611	-4%	3
United States	20887	19140	21650	23590	22020	22140	120	1%	4
Argentina	16250	15473	11778	14984	15197	13358	-1839	-12%	5
Chile	8844	10464	12554	12820	10500	12870	2370	23%	6
Australia	11420	11180	12259	12310	12020	12000	-20	0%	7
South Africa	9327	9725	10569	10982	11316	11310	-6	0%	8
China	13000	13200	13511	11780	11178	11178	0	0%	9
Germany	6906	9132	9012	8409	9202	8788	-414	-4%	10
Portugal	7148	5622	6327	6231	6195	6703	508	8%	11
Russia	7640	6980	6220	5290	4880	4880	0	0%	12
Romania	3287	4058	3311	5113	3750	4069	319	9%	13
Hungary	1762	2750	1818	2618	2555	2873	318	12%	14
Brazil	2459	3460	2967	2710	2732	2732	0	0%	15
Greece	2950	2750	3115	3343	2900	2650	-250	-9%	16
Austria	1737	2814	2125	2392	1999	2350	351	18%	17
New Zealand	1900	2350	1940	2484	3204	2350	-854	-27%	18
Serbia	2382	2244	2175	2306	2332	2332	0	0%	19
Bulgaria	1224	1237	1442	1755	747	1538	791	106%	20
Moldava	840	1520	1470	2570	1630	1630	0	0%	21
Georgia	1034	1108	830	997	1134	1134	0	0%	22
OIV world total	264188	267803	258211	292218	270234	275 665	5431	2%	

Source. Kierath and Wang, 2013.

Table 2.1 illustrates the top 22 wine producing countries globally. Specifically, it shows the unit produce in hectare litres for a five-year period (2010-2015). The top three wine producing countries are Italy, France and Spain. As depicted in table 2.1. It interesting to note

that, the top ten producing countries control 80% of production across 4.4m hectares of vineyards and these countries represent 60% of global consumption (Kierath and Wang, 2013). Italy is the number one producer contributing about 10% of wine consumed in the world. France comes 2nd with 1% of wine consumed in the world. Spain is the world's third largest producer contributing -4% of wine consumed in the world. South Africa ranks 8th in the world and was forecasted to contribute 11 310 hectare million litres in 2015 which is the highest the country has ever produced.

2.3 Challenges Facing Wine Producers

There are several initiatives and marketing strategies that can be implemented by both large wine producers and SMEs to encourage purchase behaviour. The process of marketing communication aimed at spreading the word on the product is challenging for wine SME's specifically, because of the inherent complexity of the product (Vink and Alant, 2013). Wine is irrevocably part of the soil, climate and story of the place from whence it came, but also has a myriad possible diverse, cultural and social connotations – that is what makes it an enduring, remarkable and a very complex product.

Furthermore, the needs and wants of consumers are consequently equally complex and makes it a difficult task to find the balance between what the wine producer can offer (soil type, viable grape varieties and climate play a major role) and what the consumer wants (wine style, packaging, quality, price and value) (Vink and Alant, 2013). Research suggests that most producers operate somewhere in-between being production (what they can make) and/or market driven which essentially means what the market wants (Vink and Alant, 2013). In addition, very few wine producers can successfully compete on low prices, leaving only differentiation and best cost as viable business strategies for them (Engelbrecht, Herbst and Bruwer, 2014).

2.4 Background on the South African Wine Industry

South Africa essentially comprises a multi-cultural population hence it is referred to as a rainbow nation thus marketing any products, brands and services can pose a challenge for both local and international marketers. Moreover, this is a greater challenge for producers and marketers of lifestyle and hedonic products such as wine. Essentially, the diverse needs and preferences of consumers become important factors that cannot be ignored by producers in

the wine industry (Opperman, 2010). In order to fully understand wine consumers' attitudes, needs, preferences, as well as buying behaviours, marketers need to identify key market segments to look after their present and future business profitability (Ndanga et al., 2009).

South Africa is currently not considered a wine drinking nation; its consumption per capita is low especially for a wine producing country (Foxcroft, 2009). This implies that South African consumers do not consume a significant amount of wine compared to other wine producing countries. Similarly, research found that domestic consumption sales have declined (Vink et al., 2012). However, when considering the improved socio-economic status of the nation due to steadily growing GDP and the growth of the middle class who are status and life oriented, one may conclude that South Africa is ready for an increase in wine consumption (Foxcroft, 2009). Against this backdrop, one can deduce that there could be a financially viable market that can be explored by wine marketers. Understanding this market will increase the current wine consumption and enable competition with the alcoholic beverages, such as the well-established beer industry.

Also, the marketing and distribution of South African wine has changed dramatically in the past 15 years, prompted by new opportunities and challenges, mainly due to the political liberation of South Africa and the ending of sanctions. The removal of statutory control and sanctions, combined with a global shift to free international trade during the 1990's, the value chain in the South African wine industry suddenly found itself in a new operational environment, an environment which exposed the industry to new opportunities and threats (Kruger, Du Toit and Ponte, 2006). This showed itself in a rapid growth in the number of wineries, a considerable growth in wine exports, and increased employment (Vink, Deloire, Bonnardot and Ewert, 2012). Nonetheless, the export performance of the local industry has not been as strong as that of Australia and Chile, while both domestic sales and per capita consumption of wine is declining (Vink et al., 2012).

During the apartheid years, the sale of liquor in black communities was strictly controlled by laws that prevented black entrepreneurs from obtaining liquor licences and severely limited the supply and variety of liquor that black communities could purchase (Kruger et al., 2006). For instance, most black communities did not have access to the wine varieties that the country has to offer. The government now seeks to empower previously disadvantaged

persons to acquire a stake in the multi-billion industry, nevertheless black ownership is still as low as 1.5% (Ndanga, Louw and van Rooyen, 2009).

The South African wine industry mainly consists of smaller firms relative to its competitors, are representative of a New World industry which has yet to embark on a path of sustained concentration and it is mostly dominated by domestic capital (Cusmano, Morrison and Rabellotti, 2010). Deregulation forced a restructuring of the South African wine industry and a focus on quality rather than volume (Giuliani, Morrison, Pietrobelli and Rabellotti, 2010). In addition, many producers have adapted to the international pattern of demand by planting noble international varieties and adopting advanced oenological and viticulture techniques (Giuliani et al., 2010).

The Western Cape Province in South Africa has many wine estates; the wineries are able to produce large volumes of high quality wines annually (Bester, 2012). However, South Africans generally prefer to consume other alcoholic beverages such as ciders, beer and mixed alcoholic beverages' the popularity of these beverages and the loyalty of consumers to them poses a great threat to the domestic wine industry (Bester, 2012). Such preferences could be attributed by different factors such as affordability, easy availability and effective marketing strategies by the leading breweries in the country such as South African breweries (SABMiller). A thorough research into the existing and potential wine consumers' market may possibly benefit international wine marketers to grow domestic consumption. The following section provides insights into the South Africa wine industry.

The wine industry in South Africa can be divided into two groups, namely, the large sized producers who employ fast moving consumer good marketing strategies and the smaller-to-boutique sized producers whose goal is to find a differentiation to distinguish their products from a plethora of competitors (Engelbrecht, Herbst and Bruwer, 2014). These demarcations were previously based on the type of soil, climate and location which play a significant role in determining the character and quality of the wine (South African wine industry information systems-SAWIS, 2015). In addition, South African production areas are divided in terms of the wine of origin scheme which include three geographical units, five regions, 25 districts and 64 wards offering more than 6800 wines to consumers (Engelbrecht et al., 2014). To add, recent statistics indicate that the local industry has a record of over 13000 individual South African wines, as such, local and international producers deal with fierce competition

in penetrating this market (SAWIS, 2015a). The next section presents the geographic distribution of South African wine grape vineyards per region in 2014.

Table 2.2: Geographic distribution of South African wine grape vineyards per wine region in 2014.

Wine regions	Number of vines	% Total of vines	Area hectares	% of total hectares
Stellenbosch	47 522 923	16.45	16 037	16.12
Paarl	47 522 923	16.09	15 835	15.92
Robertson	49 484 133	16.75	14 652	14.73
Swartland	34 427 310	11.66	13 591	13.66
Breedekloof	41 693 355	14.12	13 022	13.09
Olifants River	27 499 146	9.31	10 149	10.20
Worcester	28 091 196	9.51	8 858	8.91
Northern Cape	9 898 722	3.35	4 659	4.68
Klein Karoo	8 155 319	2.76	2 660	2.67
Total	295 346 914	100.00	99 463	100.00

Source: SAWIS (2015).

As seen in table 2.2 Robertson has the highest number of vines totalling 49 484 133, followed by Stellenbosch with 47 522 923. Klein Karoo has the lowest number of vines at 8 155 319. It is evident that Stellenbosch has 16% of total hectares followed by Paarl with 15% of total hectares.

The South African industry is critical for the country's economy, given that it contributed 1.2 per cent of the total GDP IN 2013 (SAWIS, 2015b). Furthermore, the local (South African) industry is ranked 35th in terms of the world domestic consumption rankings with current per capita wine consumption at eight million litres per annum (Ndanga, 2009). The wine industry contributed an estimated R20 billion (estimated at USD $1. 6 billion) to the South African Gross domestic product in 2009, this figure escalates to R23, 5 billion when tourism is included (Van Rooyen et al., 2011). Furthermore, a total amount of R 4, 3 billion per annum (2008) is contributed to the government via taxes, sustains about 275 000 job opportunities (20% through wine tourism which can be seasonal (Van Rooyen et al., 2011). A total of 356, 16 million litres of wine were consumed in South Africa in 2008 (Opperman, 2010), and about 63 million litres of drinking wine were produced from the harvest of which 38% was red and 62% was white wine compared to the yield of 12% red and 85% white wine in 1995 (van Rooyen et al., 2011). In addition, the number of wine producers was 3999, 560 wine cellars and 59 co-operatives (Opperman, 2010). The number of wine producers came to 3323,

number of wine cellar increased to 562 (DOA, 2013). Also, 485 were private cellars with over half of them clustered in Paarl and Stellenbosch (SAWIS, 2015a).

Despite these large volumes of wine produced, South Africa reportedly imported 2,2 million litres of wine in 2014, compared to the 2,3 million litres in 2013 (Sikuka, 2015). The imported wine mainly come from western countries such as France (36%), Italy (21%), Portugal (14%) and the United States of America (2%) (Sikuka, 2015). The United States has the lowest imports into the country due to the high import duties of 25% levied on them compared to the European wines, due to free trade agreements (Sikuka, 2015).

According to the Department of Agriculture, Forestry and Fisheries (2011), the wine industry in the South African context is much wider than signified by the ordinary meaning of the word "wine". Brandy and its building blocks - wine for brandy and distilling wine - have formed a significant part of South African wine industry, furthermore [most recently], grape juice concentrate for use in non-alcoholic beverages, and not just for sweetening of wine, have come to the fore (DAFF, 2011**).** The South African wine industry thus encompasses wine (natural, fortified and sparkling), wine for brandy, distilling wine, brandy and other spirits distilled from distilling wine, and grape juice and grape juice concentrate for use in non-alcoholic products (DAFF, 2011).

DAFF (2011) suggests that wine products include the following; natural wine is a non-fortified and non-sparkling wine, including perle wine, which is wine carbonated to the extent that the pressure in the container in which it is sold is between 75and 300 kpa. Moreover, it includes any grape juice or must and grape juice or must concentrate used in the sweetening of such natural wine (DAFF, 2011). Fortified wine is a non-sparkling wine which has been fortified with wine spirit. It includes the volume of wine spirit used in the fortification process. Sparkling wine is carbonated (either by fermentation or by impregnation with carbon dioxide) to the extent that the pressure in the container in which it is sold is more than 300kPa.

Wine also includes any grape juice or concentrate used in the sweetening of such sparkling wine. This grape juice concentrate and grape juice refers to unfermented, undiluted or concentrated juice from grapes destined for use in non-alcoholic products such as fruit juices (DAFF, 2011). On the other hand, wine for brandy is wine specially prepared for double distillation in a pot still and then, as distillate, matured for a period of at least three years in

oak casks with capacity of more than 340 litres (DAFF, 2011). Distilled wine is wine especially prepared for the distillation of spirits intended for use in brandy or other spirits, for fortification of wine for industrial purposes.

2.5 Wine Marketing and Tourism

Wine tourism has emerged as a strong and growing area in the new world wine countries and it represents an increasingly significant component of the regional and rural products of these countries (Bruwer, 2003). South Africa is one of the new world countries that aims to explore wine tourism potential. Stellenbosch has the potential to rival Napa Valley as a global tourist destination (Sunday times, 2016). The activity of wine tourism is an extension of a complex relationship between wine region, wine manufacturer and the visitor consumer (Bruwer and Alant, 2009).

South Africa arguably has the skills and assets, but lacks investment in the tourism sector, such as marketing and getting the region top of traveller's minds (Gregory, Sunday times, 2016). A comparison between Napa and Stellenbosch shows that 3.3 million tourists visited the Napa Valley for its great wine, food and views and spent $ 1.63 billion (R22,82 billion), $1.2 billion was spent in hotels, while the entire value of the Western cape is valued at $358 million (R4,8 billion) in 2013. This goes to show that a lot of marketing initiatives need to be put in place in order to make Stellenbosch a profitable industry and also global tourists' destination of choice given the potential it has. In addition, food and wine conferences are part of the plans to convene stakeholders to meet and discuss insights and strategies to realise the untapped potential.

For a wine business to be successful, marketers ought to investigate the environment in which it operates. This entails conducting thorough market research around the industry dynamics and other key stakeholders, such as wine companies, state regulation (department of agriculture and tourism). Table 2.3 provides an analysis of the strengths, weaknesses, threats and opportunities for the South African wine industry. Mostly, it takes into cognisance important factors such as potential for international and domestic consumption and the need to provide socially.

Table 2.3: SWOT analysis of the South African wine industry

Strengths	**Weaknesses**
South Africa has a variety of wines and wine-growing regions mostly located in the Western Cape province. South Africa's unique terroir with many different soils and different microclimates ensure that South Africa produces a host of unique wines	South Africa is a newcomer in the international space since 1994.
South Africa's position on the globe is also favourable with regard to global warming	Low domestic per capita consumption for a wine producing country.
Current consumer interest in organic wines. South Africa is a world leader in terms of producing organic wines	The South African wine industry is fragmented and production quality cannot be properly managed or predicted, for instance, the industry comprises more than 600 estates which makes it a complex task to coordinate and consolidate South Africa's marketing efforts internationally.
South Africa's research facilities and excellent university resources compare well to other new world wine countries such as Chile, Argentina and India.	The BEE process implemented by government is still being implemented. Many wineries are still unsure or unaware of the actual implications of BEE.
South Africa is one of the forerunners in terms of sound environmental legislation.	South Africa is isolated in its position on the globe. The export of wine over far distances in order to reach many potential export markets increases the carbon footprint and 'food miles' of the wine.
South Africa is one of the forerunners when it comes to sound environmental legislation.	
South Africa has one of the best research facilities in universities compared to their counterparts in the new world wine countries such as Chile, Argentina and India.	
Opportunities	**Threats**
Wine tourism- • Good trade relations with new emerging wine markets – Brazil, China and India • Social trend towards a healthier, more environmentally conscious lifestyle (e.g. ultra violet light energy, organic, light carbon footprint) • Increasing importance of Fairtrade products. • Social-media marketing • Emerging black middle class • Increasing exports to USA - the USA will be the largest wine-consuming nation in 2010 (endorsement of South African wine by Barack Obama when he became president of the United States).	Collapse of world financial markets • Fluctuating exchange rate makes the market very unpredictable to exporters • Competition by other beverages in the domestic market • Competition from other emerging wine markets (e.g. China) • Liquor laws – restricting alcohol retailers' trading hours • Over-production of wine worldwide • The BEE process put forward by government is still being implemented. Many wineries are still unsure or unaware of the full implications of BEE • Minimum wage legislation • Taxes and excise duties • Unemployment rate and the potential risk of social unrest • Global warming • Natural disasters

Compiled by Kirkman, 2010: 37

2.6 Sustainability of the Wine industry

Sustainability plays a key role in the wine industry as shown by the attention paid at several levels by academia, institutions and associations (Santini, Cavicchi and Casin, 2013). In spite

of the wine industry's reputation as being known to be environmentally safe, prior research has shown the cultivation of wine grapes and production of wine is associated with a large number of environmental concerns (Christ and Burritt, 2013). This means that the wine industry is not necessarily exempted from environmental laws and regulation. Studies have shown that the use of chemicals relative to the area under cultivation is much higher in the wine industry than in other commercial crops (Christ and Burritt, 2013; Zahraie, Everett, Walton and Kirkwood, 2013). For instance, wine production is also an energy intensive process, producing one bottle of wine (with net content of 0.7 kg) creates between 0.41 and 1.6 kg of carbon dioxide, compared with the production of an equal amount of energy corrected milk which generates 0.7 kg of carbon dioxide in New Zealand or 0.81 kg in Switzerland, demonstrating a level of energy intensity comparable to that of the dairy industry (Zahraie et al., 2013). Hence, there is mounting pressure on the industry to respond to issues such the appropriate use of pesticides, water and energy (Christ and Burritt, 2013).

Globally, historic methods of growing wine grapes mainly used natural practices and placed emphasis on the land and the environment, while newer large-scale methods adopted in many wine producing countries (Zahraie, Everett, Walton and Kirkwood, 2013) tend to rely heavily on chemicals. In current wine production regimes, this has resulted in undesirable externalities, such as the use of chemicals, such as synthetic fertilizers, pesticides, and herbicides (Christ and Burritt, 2013). Given the economic and cultural significance attributed to wine production across many of the world's regions, both new and old (Christ and Burritt, 2013), it is fundamental for international and local wine marketers to understand and minimise the negative environmental impacts associated with the industry's activities. Research has found that fundamental benefit of practising sustainable wine production is that it ensures the industry remains economically and environmentally sustainable, both now and in the future (Christ and Burritt, 2013). There is a need for the local industry to adapt to sustainable practices given the global climate fluctuations. Mozell and Thach (2014) argue that South Africa is also experiencing shifts in climatic patterns like New Zealand. South Africa wine farmers may need to replant vineyards with varietals that can handle increased temperatures (Mozell and Thach, 2014).

2.7 An overview of South African Values

One essential component of research can give the international marketer a mirror into the local culture. As we know, culture, values and other aspects influence consumption. Information gathered from researching about target markets guides marketers to position brands that satisfy consumer's needs or wants effectively. The following section outlines key aspects of the shared South African culture. Marketers ought to be cognisant of the fact that the South African market is a unique market with diverse consumers who need to be targeted differently.

Firstly, South Africa is a diverse country consisting of numerous subcultures (economic groups, religious, ethnic, regional and racial groups) which interpret and respond to society's values in their own specific ways (Schiffman and Kanuk, 2014). Positioning brands in such a diverse market might be a challenge to international marketers. An international marketer needs to investigate their target consumers' behaviour and values in order to execute strategies that will drive consumer demand.

Secondly, the country is a dynamic society that has undergone many changes brought about by technological advances (Schiffman and Kanuk, 2014). This makes it difficult to monitor changes in values in the society. The advances in technology have created a global consumer that has access to unlimited information and products. Further, this advancement has birthed global consumption through online shopping that means consumers have access to international brands at a click of their smart phone or computer. Consumers are likely to be drawn to international brands that deliver quality at competitive prices.

In the context of consumer behaviour, South Africans like to have a wide variety of products and prefer those that uniquely express what they envisage to be their personal lifestyle (Schiffman and Kanuk, 2014). This usually involves symbolic or high-end products that portray a certain class one aspires to identify with. Three criteria are available when selecting core values in South Africa. First, the value must be convincing given that a great number of South Africans people must accept the value and use it as a guide for their actions and attitudes (Schiffman and Kanuk, 2014). Second, the value must be long-term such that the value must have influenced South African people over an extended period rather than a passing trend (Schiffman and Kanuk, 2014). Third, the value must be consumer related,

simply put it must provide insights that aid understanding of consumption patterns in South Africa (Schiffman and Kanuk, 2014).

Selected core values of South Africans are discussed in this section. South Africans' concern with sport, fitness and health is arguably a core value (Schiffman and Kanuk, 2014). Soccer, rugby and cricket are the most popular sports, loved by many. Sport is one way in which South Africans unite, this is evidenced by the hype and high turnouts during local derby soccer matches or other international and regional competitions such as the World Cup and Africa Cup of Nations (AFCON). To add, fitness and health have become lifestyle choices for an increasing number of consumers in South Africa; this is evidenced by the prevalence of corporate sponsored 'cause' related walks/marathons, running clubs (Park run) and the ever increasing gym establishments country wide.

In addition, friendliness, courteousness, warmth and kindness are other values held in high regard by South Africans (Schiffman and Kanuk, 2014). Generally, South Africans especially in the townships and rural areas have that sense of welcoming or courtesy to the next person. This has been reinforced by the issue of Ubuntu which stresses the importance of humility and courtesy. Also, freedom is a strong and enduring South African value with specific focus on freedom of speech, freedom of worship and freedom of the press (Schiffman and Kanuk, 2014).

Schiffman and Kanuk (2014) further posit that achievement and success are other South African values; they consider hard work as rewarding. Notably, there has been a radical shift with women being competitive, registering for postgraduate qualifications, attaining senior positions, penetrating the entrepreneurial space and owning property, which was previously associated with men. South Africans consume sparkling wine and champagne to celebrate milestones and achievements (Newtown, 2010). To sum up, grilling meat over hot coal is synonymous of the South African way of life, as such, retailers have capitalised on this by offering braai pack specials on weekends and public holiday (Schiffman and Kanuk, 2014). South Africans gather over braais to celebrate, relax and reconnect with friends and colleagues.

2.8 Market Segmentation Strategies in the Wine Industry

According to Kotler and Keller (2012), market segmentation is the initial step in the segmentation, targeting, positioning process that businesses adopt as a core aspect of their marketing strategy. Marketing segmentation offers the advantage of dividing the market into smaller, meaningful and homogenous consumer segments and creates competitive advantages in the market place (Bruwer, Roediger and Herbst, 2017). The use of demographic information relating to age, gender, race and income are common as the basis of consumer market segmentation, however the use of generation classification as a consumer market segmentation method seems to provide more promising results than the use of gender, geographic location or other demographical classifications (Bester, 2012). This is due to the fact that generational aspects, such as age and era, have proven to relate to preferences and behaviour (Kotler and Keller, 2012). They argue that each generational cohort has been exposed to the same political, social, cultural, environmental and economic conditions and has grown up sharing the same or similar values and outlooks on life (Kotler and Keller, 2012). Thus generational classification is one ideal segmentation strategy. In addition, scholars contend that the use of demographics to segment wine target segments is inadequate, rather they advocate for the inclusion of social class and lifestyle patterns (Bruwer et al., 2017).

According to Bruwer et al. (2017), there are five wine segments; Basic wine drinkers experimenter, highly knowledgeable wine drinkers; Enjoyment orientated social wine drinkers; Fashion and image-oriented wine drinkers; and conservative knowledgeable wine drinkers. The basic wine drinker has low income, low education and mostly prefers rose and sparkling wine (Bruwer et al., 2017). The experimenter enjoys experimenting with wine, mostly prefers red wines, seeks for information about wine and spends a more than the basic drinker (Bruwer et al., 2017). Whereas, the enjoyment oriented social wine drinker consumes wines on weekends or special occasions, search for information on wine but purchases value for money. The conservative knowledgeable wine drinker is well informed about wine, consumes wine on a weekly basis, purchase it from retail and speciality shops (Bruwer et al., 2017). The fashion and image drink consumes wine to improve their status and self-confidence, this drinker is has moderate knowledge about wine hence relies on recommendations and ratings (Brunner and Siegrist, 2011). Nonetheless, in South Africa, the fashion and image oriented wine drinker does not exist (Bruwer and Buller, 2012).

Segmenting or splitting the market into subgroups of consumption will thus be beneficial for marketers to target each respective cohort effectively by providing products and services that satisfy specific preferences of that consumer cohort. To add, due to focused marketing derived from generational marketing, marketers will be able to focus marketing efforts on the specific identified needs (Akpojivi and Bevan-Dye, 2015). In the context of wine marketing, it is possible to understand their concerns and motivations which should aid wine marketers and the hospitality industry, such as restaurants and retailers (Barber, 2009). Moreover, it is important to segment the wine market and target marketing efforts given that consumers' wine preferences are shaped over time as they gain more wine tasting experience (Bester, 2012).

In addition, young consumers are exposed to the variety of wine cultivators and wine styles and it takes a while for novice wine drinkers to appreciate the wide spectrum of available white and red varieties, whereas the more experienced wine drinkers have defined wine preferences (Bester, 2012). One can infer that the younger generational cohort is the most likely to be influenced by marketing efforts, given that most these consumers have not fully acquired preferences towards specific wines. Novice wine consumers start to experiment with more complex wines and improve their consumption and they may upgrade their preferences to more complex red wines and wooded white wines (Bester, 2012). Generational theory is examined in the next section.

2.9 Generational Theory

It has become critical for wine global or local marketers to segment and target consumers effectively in order to adequately address their needs. In spite efforts to group consumers into generations or cohorts of consumption, it is arguably complex and problematic because such groupings suggest that there is a universal criterion to which group members should adhere, which is not always the case (Akpojivi and Bevan-Dye, 2015; Marinelli et al., 2014). Nonetheless, generational marketing derived from the generational theory remains one of the popular ways to segment markets (Bevan-Dye, 2016.

According to Wiese and Marie-Kruger (2016), generational cohorts are used in order to classify consumers according to their age and on the time context in which they are raised. This section discusses the Generational theory which is the widely accepted theory that discusses differences between generational attitudes (Bevan-Dye, 2016).

In essence, the Generational theory explains the differences between generational attitudes amongst individuals and how those differences affect consumption (Wiese and Marie-Kruger, 2016). Literature postulates that shared experiences during formative years give rise to generational consciousness (Bevan-Dye, 2016). Astute marketing practitioners have adopted this way of classifying and segmenting consumers in order to service different markets effectively.

In addition, the Generational theory maintains that the era in which a person was born shapes their early life and creates in them a worldview which affects the way they perceive and interact with the world around them (Wolf et al., 2005). Conversely, this idea of classifying individuals has been criticised by scholars stating that the grouping of people into different generations is problematic and complex because such grouping suggest that there is a uniform characteristic(s) which group members must meet which often is not the case (Akpojivi and Bevan-Dye, 2015). Conceptually, South African marketing practitioners can justifiably conduct generational marketing because the country's defining moments or events satisfy the conditions for generational cohort formation (Duh and Struwig, 2015). The consumer market consists of the following generations; Traditionalists or Beat Generation (born before 1946), the baby boomers (born between 1946 and 1964), Generation X (Born between 1965 and 1981) and lastly, Generation Y (1982-1995) (VinIntell, 2013). However, Generation Y is the primary interest for this study. This is motivated by the fact that Generation Y consumers play a significant role in the marketplace, given their spending potential, therefore examining their consumer behaviour and behavioural patterns is of importance to marketers and academia (Muller, Bevan-Dye and Viljoen, 2014).

2.10 Generation Y

According to Akpojivi and Bevan-Dye (2015), there is no general consensus as to how Generation Y is defined and conceptualised. Generational categorisation varies in developed and developing countries; there is need to conceptualise the term Generation Y, particularly in a South African context. Studies have demonstrated that scholars like Weiler (2005) have followed the age premise to categorise those born within a specific period which, according to literature, are those born between 1980 and 1994 and others like Nimon (2007) have followed the technological premise, hence the discrepancies regarding the conceptualisation of Generation Y (Akpojivi and Bevan-Dye, 2015). Besides, these variations in definitions

may also be attributed by the fact that each country deliberately chooses to categorise consumers using key defining moments in their respective country.

Additionally, Kim and Jang (2014) define Generation Y as the group of individuals born between 1977 and 1994 and this cohort is perceived as a very materialistic group in society. Conversely, other studies also suggest that Generation Y includes individuals born between 1977 and 1999 also referred to as millennials and Echo boomers (Charters, Velikova, Ritchie, Fountain, Thach, Dodd, Fish, Herbst and Terblanche, 2011; Atkin and Thach, 2012). On the other hand, yet other researchers posited that Generation Y comprises consumers born between 1977 and 2000 (Qenani-Petrela, Wolf and Zuckerman, 2007; Schiffman and Kanuk, 2014).

According to Statistics South Africa (2013), approximately, 38% of the population forms this generation cohort. This cohort comprises early Generation Y member born between 1986-1995, and late Generation Y members born between 1996-2005 (Bevan-Dye, 2016). This generation comprises of the younger 22-25 and older 26-34 year olds and it has been found that 65% of the older group drink wine at about three glasses daily.

Interestingly, some scholars distinguish Generation Y as individuals born between 1985 and 2005 basing on the 20-year increment between the generational cohorts (Akpojivi and Bevan-Dye, 2015; Bevan-Dye, Viljoen, 2014). Nonetheless, some researchers suggest that Generation Y can be subdivided into three sub-groups namely; adults (aged between 19 and 24), teenagers (aged between 13 and 18) and children (aged between 8 and 12) (Cant and Machando, 2005). However, this sub categorising of Generation Y would not be appropriate in the current study given that it excludes the working class with discretionary income to spend on alcoholic beverages and are possible wine consumers. Essentially, this catergorising includes high school and university individuals who are not necessarily the target for wine marketers. For the purposes of this research, Generation Y includes individuals born between 1977 and 1998. This is because individuals born between this period are above the legal alcohol consumption age in South Africa which is 18 years. Though, this cohort may change to include young adults between the ages of 21-34, given the speculation of legal drinking age being adjusted to 21 years by the government in the near future (Bester, 2012).

By and large, this cohort includes individuals with tertiary qualifications, good jobs and independent incomes, however most are unmarried and still reside in the family home

(Schiffman and Kanuk, 2014). This group is also synonymously referred to as at-home singles, they constitute a significant portion of the South African consumer market and are an important target market group (Schiffman and Kanuk, 2014). Equally, Plessis et al. (2009) posited that the Generation Y cohort have the potential of earning a high income after their education, hence are deemed as the future middle class in the South African state (Venter, 2010). The financial viability of this cohort presents significant opportunities for international wine marketers.

Most importantly, Generation Y individuals have been raised in the era of rapid political, technological advances, economic and socio-cultural events and changes (Duh, 2014). This means that most individuals in this cohort are information savvy and technology connoisseurs and are likely to purchase the latest gadgets and superior products. In essence, this cohort thrives on accessing the best technology, dining in fine restaurants and having the greatest experiences that the market has to offer.

On the other hand, some consumer researchers in South Africa are to some extent, interested in structural changes such as the increase in double digit divorce rates, single parent families and cohabiting (Duh, 2014). Such knowledge is essential in predicting demand, consumer behaviour and future trends. For instance, a country with high unemployment and a struggling economy may be an unfavourable market for luxurious products, but rather, ideal for basic commodities. Also, single parent households have arguably a lower income in comparison to dual-income households which has an effect on consumptions. Naturally, individuals with a high income have access to a variety of products and experiences and a greater propensity to spend. This makes them lucrative to both local and international marketers.

In addition, it is increasingly important to understand consumers within the South African wine market, specifically how they perceive different wine varietals (Bester, 2012). Moreover, it may be interesting for both international wine producers and practitioners to compare how this cohort preferences differ from their counterparts in western countries. Besides, members of this cohort are globally connected, interactive and communicate with everybody everywhere (VinIntell, 2013). Furthermore, Generation Y are a more inclusive and highly community minded cohort (VinIntell, 2013).

2.10.1 Importance of Generation Y to marketing practitioners

Previous literature has proven that the needs and wants of wine consumers vary by age, specifically, by generation (Qenani- Petrela et al., 2007). The consumer market of the wine consumer comprises three generations, namely Baby Boomers (born between 1945 and 1964, Generation X (born between 1965 and 1976) and lastly, Generation Y (born between 1977 and 2000). Also, this separation of consumers into generations is vital in identifying needs and wants of the different age groups regarding wine (Qenani-Petra et al., 2007). Existing literature has suggested that marketing strategies should be tailored to the needs and preferences of specifically targeted markets in order to be effective (Qenani et al., 2007). Hence, one-size-fits-all marketing strategies would not be persuasive and effective across different generations. Given the diversity within each generation, country or region, specific custom-made marketing strategies have the potential to reach targets effectively.

Noble, Haytko and Philips (2009) argue that over the past two decades, Generation Y consumers have become a vital and fundamental marketing segment in the global marketplace. This can be attributed to the fact that individuals in this age group are in the marketplace in great numbers and have purchasing power that surpasses that of any other group of consumers (Morton 2002). In South Africa, for example, Generation Y constitutes 30% of the population which is a large group for marketers to explore. Thus, it is arguably vital for international wine companies to tap into this financially lucrative consumer segment.

In addition, Kim and Jang (2014) state that Generation Y cohort are materialistic and seek products that yield status thus understanding this cohort becomes imperative in creating and maintaining relationships. Thus marketers should create products and services that enable these consumers to shape their group social identities and display their purchasing power.

To add, Generation Y individuals have grown up in a consumption-driven contemporary society and have more money at their disposal than any teen group in history (Kennedy 2001). This makes Generation Y arguably the largest group of consumers in any economy (Chaston, 2009), to the extent that they merit close attention from both marketing practitioners and empirical researchers (Branchik 2010). Besides, not only are these consumers eager to try new products and to establish their preferences for specific brands, but are the largest growing consumer generation since the baby boomer (Bester, 2012). It would

be in any marketer's interest to tap in to such a consumerist driven generation cohort so as to maintain profitability.

In addition, the discretionary income of South Africans has increased and thus luxury products are no longer limited to the upper class consumers but are also available to the emerging middle class (Kim and Jang, 2014). Imported wines are examples of such luxury products. It therefore means the target market for luxury brands such as wine has expanded to accommodate a previously untapped lucrative consumer segment which presents opportunities for international wine marketers. For instance, a luxury car brand like Mercedes is targeted at the upper class market. However, upon realising the demand for sophisticated and status brand, car manufacturers have increased their product line to cater for more consumers who aspire to be part of the brand. Banks have worked with car dealers by offering lucrative financing loan schemes to stimulate demand amongst consumers who would have otherwise not qualified. Equally importantly, luxury or hedonic products have become subtle and sophisticated, the young generation is now open to new concepts of conspicuous products/services such as luxury cars, restaurants/cafes as a means of self-expression and symbolic consumption for their desired lifestyle (O'Cass and Siahtiri, 2013). South African young urban consumers perceive coffee drinking at Starbucks and Krispy crème as sophisticated and trendy. Hence, such consumers are willing to pay premium prices for coffee and be associated with the lifestyle.

To add, this income group's formative experiences can give marketers valuable cues for status seeking consumption, given that this generation was raised by parents who provided financial support (Kim and Jang, 2014). This makes it as a segment, a financially viable target market, given their status seeking consumption, wine and other luxury marketers can explore this group. Understanding purchase behaviour and attitudes towards wine in relation to other alcoholic beverages becomes vital for the wine industry as this will unravel the potential for future growth in mature markets such as the United States and declining markets (Marinelli et al., 2014). Marketers would be better equipped with insights about their dynamic and diverse markets so as to implement effective marketing strategies that respond to the needs of their unique markets.

2.10.2 Consumer Buying Behaviour of Generation Y

The younger consumers, an emerging critical consumer segment in various brands, have been neglected in branding literature. For instance, the purchasing power of younger consumers including teenagers and Generation Y has increased, these younger consumer groups have risen as a significant consumer segment for luxury fashion brands (Hwang and Kandampully, 2012). To this generation cohort, feeling iconic is a fundamental criterion for purchase activity (Hwang and Kandampully, 2012). Hence, their purchase behaviour of a hedonic and luxury products needs to be investigated particularly in emerging markets like South Africa.

Furthermore, the exposure to world markets via social media and other online platforms has brought high demand for international brands and labels and high quality goods sought after by high income earners and the rising youth market (Schiffman and Kanuk, 2014). Generation Y consumers are said to frequent upscale cafes not entirely for the good quality of coffee, but for their social standing (Kim and Jang, 2014). One study investigated the differences of wine consumption and buying behaviour between three generations; they found that the Baby boomer cohort earn more than $70 000 while Generation Y cohorts earn less than $20 000 (Qenani-Petrela et al, 2007). This is perhaps this reason why this cohort spends less on wine compared to older generations. However, the Echo boomers arguably have the potential to earn a high income after attaining education, hence they are regarded as the future middle class of South Africa (Akpojivi and Bevan-Dye, 2015). It is therefore paramount for academics and marketing practitioners to understand their perceptions and attitudes towards imported wine, specifically, sparkling wine and champagnes.

In addition, Generation Y, like other cohorts, have found that good taste and good value for money are the most important factors to consider when purchasing wine (Qenani-Petrela et al., 2007). To add, results from this research illustrated that premium-quality and health benefits of wine are not of importance to this cohort when making wine purchase decisions (Qenani-Petrela, 2007). Nonetheless, Generation Y consumers are believed to be more likely to purchase sparkling wine than any other cohort (Qenani- Petrela et al., 2007). Generation Y's, also referred to as the millennials, wine drinking patterns are discussed in detail in the succeeding section.

2.10.3 Generation Y and Wine Consumption

The wine purchase behaviour of Generation Y has been the subject of extensive research over the past decade, though there has been a dearth of systematic studies on the influence of situational context on Generation Y's wine consumption or purchase behaviour (Fountain and Lamb, 2011). In addition, Generation Y consumers in some developed countries, such as the United States and Australia have shown an increasing interest in wine, nonetheless, there is a reported decrease in some markets (Charters et al., 2011; Thach and Olsen, 2006). Generation Y preferences for wine are driven by marketing added-value activities such as promotions and labelling, whereas limited importance is given to information about wine, reflecting a lack of subjective knowledge, experience and involvement about wine (Chrysochou et al., 2012).

Baby boomers have been the leading wine drinkers globally, however there has been a steady shift in consumption that has prompted a need to examine Generation Y (Fountain and Lamb, 2011). Previous research has shown that the Echo boomers or Generation Y in the United States are positively gravitating towards wine consumption (Thatch and Olsen, 2006; Nielsen, 2007). Conversely, in Italy there is a decrease in per capita alcohol consumption mainly due to the reduction in wine consumption and an increase in traditional beverages, such as beer and spirits (Marinelli et al., 2014).

Generation Y's market segment consists of loyal supporters of various alcoholic beverages that compete with wine for market share; these consumers often spend substantial amounts of money on other beverages such as beer and ciders (Foxcroft, 2009). Penetrating a market that already prefer ciders, beers and whiskeys poses a challenge to wine marketers particularly, international wine marketers. Nonetheless, in the next 40 years, the Generation Y cohort is predicted to be increasingly important as wine consumers who are spending substantial amounts on wine, an increasing interest in wine in some countries, although there is a reported decrease in some markets (Charters et al., 2011). For instance, in the United States and Australia wine consumption is at 60% in this cohort (Thach and Olsen, 2006).

The wine industry generally seems aware that it needs to pay more attention to this generation (Charters et al., 2011). Studies revealed that Generation Y consumers in South African select wine similar to their United States counterparts (Lategan et al., 2017). Thus wine marketers have started to take a generational view of the wine market due to the widely

held belief that for the world wine market to grow, more young drinkers must be introduced to wine during their critical late teens to early-mid–twenties (Engelbrecht et al., 2014). This a stage in which they form consumption habits for life (Engelbrecht et al., 2014).

Generation Y has arguably started moving along an interest and adoption curve before becoming core wine drinkers (VinIntell, 2013). It is not surprising that more than 50% of Generation Y, the largest generation are on-boarding into wine as core drinkers and the wine industry is optimistic about the future (VinIntell, 2013). Thus, marketers ought to establish the needs and wine preferences of Generation Y. Past research has proven that wine preferences and purchase decisions are influenced by their disposable income, social acceptability of their purchase decisions and the wine brand image and other values (Bester, 2012).

Additionally, the Generation Y consumers are perceived as an interesting group due to the variability which exists in the cohort and also given that wine consumption practices appear to change fast as this group changes (Charters et al, 2011). Wine marketers ought to adapt their marketing efforts to the ever-changing needs of this generation. Bester (2012) states that this cohort demands choice and personalised offerings. A close examination into this cohort's predictors of wine purchase will be beneficial for international marketers to execute competitive strategies.

Generation Y consumers are known to prefer red wine which is mostly paired with food and its ability to relax one, although it is not regarded as a 'cool/hip' beverage (Thach and Olsen, 2006). Interestingly, respondents from a study carried out in Italy associated wine with comfort, pleasure and quality (Marinelli, Fabbrizzi, Scottini, Sachelli, Bernetti and Menghini, 2014). There is a general consensus that wine is regarded as a relaxing beverage by the Generation Y cohort in both Italy and the United States. In fact, this cohort perceives wine as expensive, snobby and snooty (Thach and Olsen, 2006), although, other Generation Y consumers view it as a natural drink and are arguably not too concerned with the quality compared to Generation X (Charters et al., 2011). This could be attributed to the fact that Generation Y does not have access to as much discretionary income as the older generation.

Furthermore, consumers in Generation Y are concerned with price and getting good value as opposed to Generation X who are more focused on high quality and brand name (Wolf, Carpenter and Qenani-Petrela, 2005). Equally importantly, in this generation, it has been

noted that the appearance of the label is particularly important to this cohort and that some overseas wines are appealing (Qenani- Petrela et al, 2007). In addition, Generation Y consumers perceive Italian wines to be of superior quality unlike any other generation (Qenani-Petrela et al., 2007). In fact, the Echo boomers perceive France as the most expensive region in which to purchase wine (Qenani- Petrela et al., 2007). Based on this generation's reasoning, the researcher deemed it fit to investigate consumer purchase intention towards imported wine, specifically from old world wine producing countries.

In addition, marketing managers have a responsibility of ensuring that any producer or service provider is able to reach their target customers through providing products that satisfy their ever-changing needs and wants. This could be done by executing unique marketing strategies that influence brand tribalism among wine consumers. Wine consumption arouses sensory experiences through the bouquet, the colour, the shape of the bottle, the labelling and most importantly, the taste (Drennan, Bianchi, Elizondo, Louriero, Guibert and Proud, 2015). For instance, a particular wine can evoke memories of special occasions or stimulate fantasy imagery related to the excitement and expectation of a pleasant consumption experience (Drennan et al., 2015). Furthermore, consumers often seek cues to assist in the purchasing decision such as brand name, price, variety, style, region and recommendation (Drennan et al., 2015). There is a dearth of literature that investigates the predictors of imported wine purchase, rather the existing literature predominantly focused on the antecedents of purchase intention of local (South African) wines brands.

2.11 Chapter Summary

The purpose of this chapter was to present the research context of this study. This chapter began with an overview of the global wine industry in order to get a holistic view in which the local industry competes. Thereafter, the South African wine industry was discussed in detail. Furthermore, a section on tourism and the sustainability of wine industry followed. Thereafter, a section which detailed the Generation Y cohort and Generation Y in South Africa was presented. The subsequent chapter (chapter three) presents the following theoretical underpinnings; consumer culture theory, social identity theory and aspirations based choice theory that ground the current research. Thereafter, an empirical literature review of each research construct is discussed in detail.

CHAPTER 3: THEORETICAL GROUNDINGS AND EMPIRICAL LITERATURE

3.1 Introduction

This chapter discusses the theoretical frameworks and the empirical literature underlying the research. The past few years have witnessed a growing interest among academics in marketing, borrowing theories from psychology literature and interpersonal relationships and applying them in the context of brand consumption (Sarkar and Sreejesh, 2014). Three theoretical foundations that are discussed in the following section are; Consumer Culture theory (CCT), Social Identity theory and the Aspiration-Based Choice theory. These theories have been chosen to ground the study, given that they explain consumption and identity formation. Thereafter, the next section provides the background literature on the constructs of brand tribalism, brand love, brand preference, brand credibility and purchase intention used to develop the conceptual model in this study.

3.2 History of the Consumer Culture Theory

There has been a growing interest in cultural perspectives on consumption in the decades around the turn of the millennium (Askegaard and Linnet, 2011). It is believed that consumption has moved away from being either a matter of a sociological perspective of re-generating productive forces, maximising utility (economics) or a process of acquisition (business perspective) to become a term that permeates the relations between society and the individual (Askegaard and Linnet, 2011). This could be in the form of social classification and communication systems, identity formation process, or the search for existentially fulfilling experiences, ritualistic and community building processes (Askegaard and Linnet, 2011). The first consumer culture conference was held on the University of Notre Dame Campus and co-chaired by Russ Belk and John Sherry (Arnould and Thompson, 2007). Consumer culture theory was drawn from the work of Bourdieu (1984) and Foucault (1974) and others to examine the ideological context in which consumption takes place (Arnold and Thompson, 2005). Consumer culture has become a recognised institutional category that represents one of the pillars of consumer research, along with information processing or behaviour decision theory and econometric modelling (Kahn, 2006 cited by Arnould and Thompson, 2007). Research suggests that the consumer culture theory emerged from a

different epistemological perspective to the Piagetian model generating a different set of research foci and methodological practices (Narin and Griffin, 2007). Arnould and Thompson (2005) argue that consumer culture theory has advanced knowledge in four research domains; sociocultural, experiential, symbolic and ideological aspects of consumption.

3.2.1 Consumer Culture Theory

Arnould and Thompson (2005), the founders of the consumer culture theory, defined it as the family of theoretical perspectives that address the dynamic relationships between consumer actions, cultural meanings and the market place. In addition, consumer culture theory refers to a family of theoretical perspectives that address the dynamic relationships between consumer actions, the marketplace, and cultural meanings (Arnold and Thompson, 2005:870). Furthermore, the consumer culture research has focused on the representation of the consumer subject as a reflexive and empowered identity seeker, navigating its way through a pool of opportunities offered by the market place and reflecting critically and consciously over the market mediated messages that embrace him or her (Askegaard and Linnet, 2011).

Consumer culture views consumption as continually shaped by on-going interactions within a dynamic socio-cultural context, and is concerned with the factors that shape the experiences and identities of consumers "in the myriad messy contexts of everyday life" (Arnold and Thompson, 2005). The consumer culture theory approach has an interest in the operation and influence of "consumer culture", as denoted by a social arrangement in which the relations between social resources, lived culture, and between meaningful ways of life and the symbolic and material resources on which they depend, are mediated through markets (Arnold and Thompson, 2005). The consumer culture theory postulates that individual consumers do not make rational choices in the 'free' markets (Arnould and Thompson, 2005). Consumer culture theory tends to be associated with people as they work and transform symbolic messages encoded in advertisements, brands and retail settings or material goods to manifest their particular persona and social circumstances and further identity and lifestyle goals (Arnould and Thompson, 2005).

The Consumer culture theory has been predominately focused towards exploring a variety of contexts in which the consumer has been discovered as an agent who draws upon market based resources in constructing his or her own identity (Askegaard and Linnet, 2011). There

are some notable misconceptions about consumer culture theory, for example, the idea that this research stream is defined by qualitative methods, meaning that its findings are context bound and theoretical and that it only investigates entertaining esoterica (issues that lack practical relevance (Arnould and Thompson, 2007). Moreover, they aimed to create a tradition that rhetorically countered these misconceptions while evading some of the semantic dilemmas posed by other common classifications, such as interpretivist and qualitative [paradigms].

3.2.2 Importance of the Theory

Some researchers have interrogated the need for consumer culture theory. It has challenged the view that consumers are isolated individuals who self-consciously consume to maximise their utility (Goulding, Shankar and Canniford, 2013). Central to the development of this perspective are studies of marketplace cultures that explore the main ways in which consumers interact with consumable resources to establish emotional and hedonic social relationships (Arnould and Thompson, 2005; Cova and Cova, 2002 Muniz and Schaun, 2005). Essentially, such studies lie at the heart of the recent shifts in understanding of the value creation process (Goulding et al., 2013). In postmodern times, firms no longer just mass-produce with utility benefits for blind exchange at the marketplace with consumers but rather consumers are now viewed as active pro-consumers or co-creators of value (Cova and Pace, 2006). In a nutshell, this perspective concedes that consumers are not ready-made community members, but rather explains how consumers learn how and what to consume in order to enter the marketplace culture (Goulding et al., 2013).

3.2.3 Motivation for Using Consumer Culture Theory

Consumer culture theory is deemed relevant to this study given that it has been used to ground a number of studies in the marketing field, such as brand communities, consumer preferences, brand relationships and the servicescape, lifestyles and advertising meanings (Arnould and Thompson, 2007). Holistically, consumer culture theory aids in describing how consumers construct meaningful universes for themselves by inscribing their consumption behaviours in various social logics (Askegaard and Linnet, 2011). Research on sub-cultures of consumption and brand tribes has contributed significantly to understanding the consumer, not just as an identity seeker, but as a member of small scale social unions (Askegaard and Linnet, 2011). Consumption practices of these social unions (tribes) is purposively directed

towards construction of shared collective identity, nonetheless, these identities are goals set to accomplish personal identity projects (Askegaard and Linnet, 2011). Bearing this in mind, studies on brand communities and sub-cultures of consumption address the way in which marketplace resources and shared consumer affinities organise collective meaning and identities (Arnould and Thompson, 2007). Furthermore, creation of tribal identities in a post-industrial society determines consumption (Arnould and Thompson, 2007).

Social psychology literature suggests that self-image goals aim to satisfy self-governed desires, such as self–identity and avoiding social rejection (Healy and Beverland, 2016). In addition, if tribal identity borders are to be extended so as to obtain self-authentication, this involves practices that enable consumers to maintain their tribal identity, help other tribal members attain validity and do so without stress to non-tribal members (Healy and Beverland, 2016). Research has explored how members of one tribe draw on marketplace resources when self-disclosing in ways that balance self-image and other goals (Healy and Beverland, 2016). This self-disclosure is said to form a person's value driven goals, understanding self-disclosure of non-normative and divergent identities can help understand how consumers use marketplace resources to achieve their identity goals and overcome stigmatisation (Haley and Beverland, 2016).

In addition, literature on brand communities, sub-cultures of consumption has accentuated how consumer identity projects as well as their consumption patterns are highly bound by socially instituted factors of historical and cultural character (Askegaard and Linnet, 2011). In addition, consumer culture theory aids researchers in understanding brand tribalism through expanding the concept by describing a brand tribe as a group of individuals with shared consumption behaviour and social interaction based on shared values (Cova and Cova, 2002).

Consumer culture theory also helps to understand brand love which is a construct in this study mainly because it is a theory that focuses on symbolic consumption and brands associated with a certain lifestyle, especially for products and brands associated with fashion and luxury (Ahuvia, Carroll and Yung, 2006). Interestingly, progress on consumer research has also generated conflicting views of one of this study's constructs - brand love (Sarkar, 2013).Based on Consumer culture lenses, the real world of the consumer is neither transparently rational nor unified (Arnould and Thompson, 2005). Brand love relates to this

irrational view of consumption, where the consumer constructs multiple realities using consumption experiences (Sarkar, 2013).

3.3 History of Social Identity Theory

Social Identity theory has its origins in early work in Britain by Henri Tajfel on social factors in perception and on cognitive and social belief aspects of racism, prejudice and discrimination (Hogg, Terry and White, 1995). It was fully developed by other researchers in the late 1970s (Hogg et al., 1995). Interestingly, in the 1980s, an increasing interest arose amongst researchers mainly from North America, Australia and Europe to make significant theoretical and empirical advances on the social identity theory (Hogg et al., 1995). John Turner initiated an important theoretical development of the social identity theory to produce self-actualisation, which is somewhat related (Hogg et al., 1995). Both theories are distinct from each other but they are related closely enough to be considered as part of the same theoretical and meta-theoretical enterprise (Hogg et al., 1995). The development of the social development theory is interwoven with the development of the unique European social psychology (Hogg et al., 1995). In actual fact, European social psychologists considered themselves somewhat different in their theoretical and social agenda from their North American counterparts (Hogg et al., 1995).

Tajfel (1972) defined social identity as the individual's knowledge that he or she belongs to certain social groups, together with some emotional and value significance to him or her of this group membership. Tajfel and Turner (1979) also define social identity as the perceived connectedness to various human aggregates that shapes individual identity. Similarly, social identity is defined as the different selves that individuals adopt in their social interactions (Bonache, Langinier and Zarraga-Oberty, 2016). In addition, a social identity both describes and prescribes one's attribute as a member of a group, essentially how one should feel, think and behave (Hogg et al., 1995). Furthermore, social identity is defined as the degree to which a consumer feels a sense of connection with other consumers, and the emotional and evaluative significance of this perception (Baggozi and Dholakia, 2006). For the purposes of this study, social identity is defined as the extent to which a consumer defines and positions themselves in society, for example, through behaviour, lifestyle and consumption.

Social identity theory is intended to be a social psychological theory of intergroup relations, group processes and the social itself (Hogg et al., 1995). The social identity theory advises

that individuals in augmenting their self-esteem, seek to identify with groups that have an attractive or prestigious public image (Garry, Broderick and Lahiffe, 2008). According to the Social identity theory, the effect of group norms of behaviour will be greater when identification with the group is high (Livingston and McCafferty, 2015). In actual fact, not all group members identify with the group to the same extent (Livingston and McCafferty, 2015). This is consistent with previous studies that found that people have a repertoire of such discrete category membership that varies in relative overall importance in the self-concept (Hogg et al., 1995).

3.3.1 Importance of Social Identity theory

Social Identity theory rests on the assumption that a positive social identity is mainly based on favourable intergroup comparisons (Rupert, 2000). Grappi and Montanari (2011) claim that the basic premise of the Social Identity theory is that individuals classify themselves in various social categories in order to aid self-definition within their social environment. Social Identity theory is that a social category e.g. political affiliation, sports team and nationality that one belongs to provides a definition of who one is in terms of the defining characteristics of the category, a self-definition that is a part of self-concept (Hogg et al., 1995). Furthermore, an individual's personal attitude toward behaviour will be more predictive of intentions to perform the behaviour when that behaviour is constant with a salient in-group norm (Livingston and McCafferty, 2015).

Social Identity theory has been used to ground a number of studies within different contexts, especially those seeking to investigate group consumption. For instance, one study examined the role of social physiological factors influencing responses to normative information about alcohol consumption, focusing particularly on identification with the social group (university students). Most notably, that study found that information that emphasises the level of consumption in a particular group is less likely to reduce consumption when people identify strongly with the group and see alcohol consumption is important to it (Livingstone and McCafferty, 2015).

3.3.2 Motivation for using the Social Identity theory in the Study

Drawing on the theoretical premises discussed above, social identity was chosen to underpin the study because it focuses on how the consumer's consumption is influenced by societal

status and group influence. It is however, important to note that consumer social identities and consumption choices shift according to situations and lifestyle changes (Goulding, Shankar and Canniford, 2013). This has been supported substantially in previous research, for example, within brand communities (tribes), a consumer's identification with others positively affects their intention to re-purchase a brand (Dholakai, Bagozzi and Pearo, 2004). Additionally, tribal association and social identity theory propose that people will engage in activities to support a certain community or tribe where that tribe matches with their own self-definition or identity. This therefore means that consumer's identification with others can be powerful in brand 'tribes' contexts and has the potential to be explored by brand managers for a firm's success. Brand managers can implement marketing strategies that significantly influence certain branding constructs such as brand love and brand preference to influence tribe members.

3.4 History of the Aspiration-Choice based theory

The following section provides a discussion on the Aspiration based choice theory. This theory was coined by (Guney, Richter and Tsur, 2011). Furthermore, this theory sets out to develop an extended choice model that addresses how aspirations arise and how they guide choices (Guney, Richter and Tsur, 2011). According to this theory, when one is confronted with a choice problem, the decision maker first deduces his or her aspirations by maximising their preference relation and then chooses the alternative that is closest to the aspiration (Gurney et al., 2011). An aspiration is also regarded as a reference point for a decision maker (Guney, 2011). Aspiration-based choice theory is popular in the fields of Psychology, Marketing and other behavioural sciences.

3.4.1 Aspiration-Based Choice Theory

Javalgi and Grossman (2016) postulate that aspiration, or life goals have received great attention from researchers in consumer behaviour and psychology research. Furthermore, empirical findings advocate that aspirations are an important predictor of outcomes of interest (Javalgi and Grossman, 2016). There are extrinsic and intrinsic aspirations which is consistent with the self-determination theory (SDT) by Ryan 1995 (Javalgi and Grossman, 2016). Additionally, intrinsic goals or aspirations are associated with affiliation, self-acceptance, and community feeling (making the world a better place) whereas, extrinsic are greatly focused on external rewards and social praise and typically are less inherently

satisfying (Javalgi and Grossman, 2016). Image, popularity and financial success are examples of extrinsic goals (Javalgi and Grossman, 2016).

In the aspiration literature, an aspiration is informally defined to be a subjective goal or target and any outcome below this target is considered to be a failure while any outcome above it is a success (Gurney et al., 2011). Contrary to other definitions, an aspiration in a choice situation is said to be an alternative with the highest utility when the decision maker faces no unavailability restriction (Gurney et al., 2011). Simon's (1955) satisficing procedure describes the choice behaviour of a decision maker who first determines how good an alternative she seeks to find is, then stops searching as soon as a good alternative has been found, that threshold is an aspiration. The aspiration level is a value on a scale of achievement or attainment that lies between realistic expectation and reasonable hope (Javalgi and Grossman, 2016). Moreover, people's aspirations are goals they set for themselves (Javalgi and Grossman, 2016). Nevertheless, based on other definitions presented above, one is inclined to believe that an aspiration is considered more of an 'ideal' that the decision maker is dreaming about rather than a threshold (Gurney et al., 2011).

People possess aspirations regarding almost everything, ranging from consumption (luxury products) to partner search (Guney and Richter, 2015). Aspirations shape our choices and influence a number of economic parts of society (Guney et al., 2011). Researchers also argue that existing literature on the decision theory excludes the effects of aspirations in the choice setting which they regard as highly fundamental (Guney et al., 2011). In addition, there is an intuitive notion that choices resemble aspirations through some subjective notion of similarity (Guney et al., 2011). For instance, aspirations for a 'dream' lifestyle may influence the type of clothes, food and beverages one purchases. Some aspirations are attainable through consuming hedonic products. Consumer aspirations for pricey luxury goods may lead consumers to purchase counterfeit brands, resulting in a worldwide demand for counterfeit brands (Guney et al., 2011).

In a standard choice theory, a decision maker makes choices from a given set of alternatives (Guney et al., 2011). Moreover, preferred options might often be unavailable, this may stem from a variety of sources in a standard consumer setting, a product might be unavailable or sold out, in a political context a candidate may exit the race and in marketing, companies may pre-announce products prior to launch (Guney and Ritcher, 2015). However, the fact

aspirations are not always available does not prevent them from having an effect on an individual's choice decisions (Guney and Richter, 2015). The interpretation of the aspiration-based theory is rather procedural, it suggests a way in which agents may make decisions when faced with desired unavailable alternatives (Guney and Richter, 2015).

3.4.2 Importance of Aspiration-Based Choice Theory

The other fundamental aspect of the aspiration choice is that it incorporates the phantom options to the existing choice framework (Guney et al., 2011). An alternative that exists in the choice environment at the time of the choice is a phantom (Gurney and Ritcher, 2015). Studies in Marketing and Psychology have found that the addition of phantom alternatives to a choice set can affect the choice share of existing options (Guney et al., 2011). Furthermore, there is a distinction between known and unknown phantoms, known phantoms refer to alternatives whose unavailability is known from the onset, for instance, products about to launch (Guney et al., 2011). On the other hand, unknown phantoms are options whose unavailability is initially unknown, such as fully booked flights (Guney et al., 2011).

3.4.3 Motivation of using the aspiration-choice based theory

This theory was deemed suitable to ground this study given its different characteristics. First, people are said to set their aspirations and aim to achieve them over time, however these goals arise from values and norms that are common and are accepted by society (Javalgi and Grossman, 2016). This relates to the notion that society groups to which consumers belong shape their aspirations. In addition, life aspirations of individuals predominately echo the economic and cultural conditions in which they live, while goals depict the individual's direction of life (Javalgi and Grossman, 2016). As such, understanding aspirations of a specific population helps understand present and future behaviour, behaviours such as purchase behaviour (Javalgi and Grossman, 2016). Moreover, strong aspiration creates the individual's brand attachment, behavioural intention or commitment when he or she has a core principle to improve and grow, and he/she feels that being in relationship with the brand facilitates this self-expression and growth, then his or her involvement is integrated and self-determined (Sreejesh, 2015). This brand attachment is related to brand love.

By and large, the insight from consumer brand aspiration dimensions could help brand managers to better understand who are the "right" customers for their brand, and design

communication strategies accordingly to retain these customers. In the light of the current study, international wine marketers need to identify their target market and market wine brands that appeal to this market effectively.

3.5 Empirical Literature

Consumers are shifting away from consuming products for functional or rational benefits to emotional consumption (Kim, Koo and Chang, 2009). Similarly, studies reveal that consumers do not consume products for their utility, but for their symbolic meaning which represents images (Veloutsou and Moutinho, 2009). More recent research asserts that consumers no longer purchase or consume brands only for functional benefits; brand consumption also allows consumers to display their identities (Banerjee, 2016). These could be individual or shared (brand tribes) which is one of the fundamental research constructs of the study. Consumers arguably construct desired identities brought about by symbolic benefits of brands. This is true for most hedonic products such as wine. It is every international wine marketer's goal to have their brand in the target consumer's consideration set and ultimately influence purchase intention. The following section unpacks a contemporary marketing concept 'brand tribalism' that is gaining academic and industry interest.

3.5.1 Background on Brand Tribalism

Cova (2002) introduced brand tribalism in the marketing field to designate a community of individuals formed on the base of emotional attachment to a brand or product. This brand tribalism concept arises from a post-modern society built on collaboration between anarchy and technological development. Cova and Cova (2002) advocate that by being extremely individualistic, society is now in quest of traditional values of social connectivity through the experience of shared emotions or passions. Consumers need to belong to a group and from there emerges tribal marketing which is an extension of word-of-mouth (Jurisic and Azevedo, 2011). Furthermore, brand tribalism identifies a community of self-selected individuals formed on the basis of an emotional attachment to a product or a brand (Cova and Cova, 2010). Brand tribalism is derived from the concept of brand community (Loureiro and Kaufmann, 2016). Essentially, tribal marketing entails marketing to like-minded supporters. Moreover, this concept developed from the concept of brand community, which is the integration of the communities associated with the same brand or that have an interest in the

same thing or like the same brand (Hayeemad et al., 2015). Literature suggests that tribe members can be segmented into four groups namely: low participation individuals, active members, practitioners and devotees (Cova and Cova, 2002). Mitchell and Imrie (2010) identify an additional (fifth) role in the tribe that they name 'chief' whose role is that of an influencer and an open channel of communication who has significant value for building relationships with the entire tribe. The word 'tribe', in the postmodern sense, refers to an individual's return to pre-industrial values of religiosity, a local sense of community, a fusion of value systems, and a shared ethnocentrism (Cova and White, 2010). On the other hand, a tribe may be defined as a social network of heterogeneous individuals linked by a shared passion or emotion (Dionisio et al., 2008). Likewise, this line of research portrays that tribes may be classified as any group of people having interests in a specific brand or product through which they create a distinct society with its own "myths, values, rituals, vocabulary and hierarchy" (Cova and Pace, 2006). The "conciseness of kind" shared rituals, and interactions lead to the formation of a brand community or tribe (Laverie, Humphrey, Velikova, Dodd and Wilcox, 2011).

Tribal members are recognised and recognise themselves as members of a group and will often gather and perform ritualistic acts in public places referred to as anchoring events (Garry et al., 2008). In addition, tribes are said to rely on these events to sustain membership, to reaffirm and reinforce the values of groups and to provide a platform to bring together and bond members (Garry et al., 2008). Brand tribalism is the tendency of individuals to make buying decisions based on shared beliefs about brands (Tuominen, 2011). Furthermore, studies suggest that the groups formed or created around one brand are referred to as brand tribes or brand communities (Cova and Pace, 2006). Additionally, the common denominator of post-modern tribes is the community of passion and emotion (Cova and Cova, 2002).

The distinction between the later brand tribes and brand communities is blurry (Veloutsou and Moutinho, 2009). The distinction is addressed in the upcoming sections. At the moment, a new strategy for building equity is to create brand tribalism (Tsiotsou, 2013; Taute and Sierra, 2014). Brand tribalism can be considered as a new marketing concept posing a great challenge for marketers in a postmodern era, changing the dynamics on how to build a brand as a tribe (Veloutsou and Moutinho, 2009). Nevertheless, creating brand tribalism is a great challenge for markets because it entails building a network of individuals who have a passion for the same brand, have an association, share emotions and opinions on the brand, among

members in a tribe (Dionísio, Leal and Moutinho, 2008). In addition, Taute and Sierra (2014) state that consumers have a common interest, reciprocal relationship, enjoy the same brand and create a social sub-culture, have value and share rituals within the consumer society groups or tribes (Cova and Pace, 2006). In fact, it looks like a tribe that has a symbolic expression, tribal culture and participates in rituals that show commitment to the tribe (Cova and White, 2010). Brand tribalism occurs from brand-value products that affect consumer emotions (Veloutsou and Moutinho, 2009. Studies also proved that the brand tribalism is the creation of the value to occur in the groups interested in the same brand (Cova and Pace, 2006). Brand relationships have a positive effect on brand loyalty (Haymeed et al., 2015). It is clear that if marketing practitioners successfully reach brand tribes, they can attract, retain and build profitable relations with their target markets.

Brand tribalism is a common feature in contemporary marketing, often consumers subscribe to sub-groups of consumption, not only for consumer products and brands, but also for hedonic brands. Jurisic and Azevedo (2011) also concur with the former definition that suggests that brand tribalism is a community or sub-culture of consumers formed through emotional bonds to a product. Moreover, brand tribalism and reference groups usually determine consumption behaviour for luxury or aspirational products (Jurisic and Azevedo, 2011). Wine is one an example of a luxury product that would be interesting to investigate. Brand tribalism is premised on the use of symbolism to demonstrate a member's allegiance to the group (Ruane and Wallace, 2015). This implies that brand tribalism is synonymously associated with symbolic product consumption, more than utilitarian consumption. In addition, consumers use products and services to express or conform to their respective brand tribe's standards. For instance, research suggests that brands allow consumers to express group membership (Veloutsou and Moutinho, 2009). Consumers derive experiences and group membership from brands. Firat and Dholakia (2006) assert that such experiences are often sought through the formation of communities, and it is only through the formation of a community or tribe that these experiences can be realised, because it is through participation that individuals achieve meaning.

Veloutsou and Moutinho (2009) divided the brand tribalism into five dimensions: 1) degree of fit with lifestyle, 2) passion of life, 3) reference group acceptance, 4) social visibility of brand and 5) collective memory. Interestingly, two separate studies prove that brand tribalism is one of the processes for creating society through the consumption of a brand which is

fundamental to making brand royalty and brand equity (Tsiotsou, 2013; Taute and Sierra, 2014). In addition, brand tribalism has its objective to extend the emotional creation towards the brand and to maintain the tribe group (Taut and Sierra, 2014). Essentially, such reason contributes to the emergence of brand equity, occurred from brand tribalism (Hayeemad et al., 2015). Likewise, Tsiotsou (2013) found that the brand tribalism has its influence on brand loyalty which is to create brand equity.

3.5.2 Existing Research on Brand Tribalism

Apart from the arguments discussed above. There are a few studies on brand tribalism. The majority of studies on the subject of brand tribalism are predominately focused on sport, luxury vehicles and video games. One qualitative study focused on event sponsorship and brand tribalism. The major findings of this study depicted that brand perceptions are actively generated across internal-external sub-cultural borders in sponsorship contexts (Garry et al., 2008). In addition, some decision makers engaged in sponsorship were found to socially identify with a prestigious group through tribal association (Garry et al., 2008).

Another study identified the associations between tribalism and tribal marketing by analysing consumer behaviour and the formation of the tribes within a Facebook and blog environment (Tuominen, 2011). The study focused on three hotel chains and one nationwide restaurant, and it found that in order to succeed in Social Network Marketing, certain fundamental issues should be considered, such as understanding brand communities, being relevant and also allowing sharing of content and engagement (Tuominen, 2011). Similarly, another study was conducted among Generation Y consumers in Ireland. The aim of the study was to investigate the relationship between social influence and consumers' self-expression through brands and brand tribalism (Ruan and Wallace, 2015). The major findings indicated that online social network influence and susceptibility to interpersonal influence are antecedents of brand tribalism (Ruan and Wallace, 2015).

3.5.3 Tribal Marketing

Tribal marketing challenges creative individuals who are prepared to abandon traditional psychographic means of segmenting and targeting (Goulding et al., 2013). Furthermore, a tribal approach to consumer behaviour answers marketers' calls to look beyond conventional marketing theory and avoid pigeonholing consumers (Addis and Podesta, 2005) through

providing a means to segment groups of consumers, based on meaningful shared characteristics (Addis and Podesta, 2005). In actual fact, tribal marketing examines how tribes consume and co-create products for their own uses (Mitchell and Imrie, 2011). Basically, this gives brand managers another platform to create social interaction around their brand or service (Mitchell and Imrie, 2010). In addition, in order to 'talk' to the tribe, it is vital that a marketer understands how individuals become members of groups (Goulding et al., 2013). It is therefore imperative for brand managers to know the distinction between sub-cultural communities, brand communities and consumer tribes. Marketing to those groups is not a one-size-fits-all approach.

Sub-cultural community involves shared commitment to a particular brand or product class or consumption activity (Goulding et al., 2013). Additionally, it is developed on strong interpersonal brands' ritualised modes of expression and beliefs (Goulding et al., 2013), while brand community refers to a set of social relationships that are structured around the use of a focal brand (Muniz and O'Guinn, 2001). Furthermore, brand communities create shared rituals and ways of thinking and traditions, as well as a sense of moral responsibility towards members (O'Gunin and Muniz, 2005). Consumer tribes rarely dominate consumers' lives, rather they represent a temporary escape from everyday life (Cova et al., 2007). Also, consumer tribes differ from sub-cultures of consumption in that their connections are much narrower, with similar beliefs and values that set them apart from prevailing societal culture (Schiffman, Bednall, O 'Cass, Paladino, Ward and Kanuk, 2008).

More so, tribal brands are said to evolve around products with similar values and they are the emotional result of personalisation (Moutinho and Veloutsou, 2009). That is to say, the process of creating a tribal brand involves a number of social interactions amongst customers with various facets of their preferred brand, taking an extended link of time to attain socialised expression (Moutinho et al., 2007). In sum, a tribal brand is a consequence of socialised expressions (Moutinho and Veloutsou, 2009). Notwithstanding Muniz and O'Guinn (2001) pursuit to differentiate brand tribes from brand communities, other researchers contend that these two are related or similar constructs (Haymeed et al., 2015; Badrinarayanan, Sierra and Taute, 2014; Veloutsou and Moutinho, 2009; Cova and Pace, 2006). Hence, these two research constructs will be used interchangeably in the current chapter and hypothesis development.

3.5.4 Characteristics of Consumer Tribes

Consumer tribes, like any other tribes, have distinct features used to categorise them. As mentioned in the definitions, brand tribes are characterised by the unpredictability of belonging, meaning that homogenous behaviour and formal rules do not exist (Goulding, Shankar and Canniford, 2013). In addition, they put forward that individuals do not become members of a tribe based on factors such as geographical location, sex, ethnicity, religion or any other common segmentation base, but rather by education and accomplishment (Goulding et al., 2013). This is consistent with previous findings, where scholars describe a tribe as a collection of heterogeneous groups that is inclusive of several segments linked only by a shared passion or emotion (Cova and Cova, 2002).

First, consumer tribes exist when members identify with one another, have shared experiences and emotions, and engage in collective social action; all of which can be facilitated through a variety of brands (Goulding et al., 2013). Second, membership in one tribe does not impede membership in other tribes or communities. Tumonein (2011) concurs with this statement, as he notes that an individual may belong to multiple tribes at the same time to express different aspects of their identity. Third, consumer tribes are said to be playful in that value is placed on the likelihood to invigorate passion and generate social links through deconstructing and reassembling marketplace resources (Cova et al., 2007).

Fourth, tribes are transient, that is, they emerge and disappear; peoples' identities alter, hence they are not predictable (Goulding et al., 2013). In light of this, research suggests that consumer tribes should be understood through their share of beliefs, ideas and consumption patterns (Tumonein, 2011). In addition, consumer tribes are entrepreneurial in nature meaning that members are empowered and emancipated towards the market, tribe members produce marketplace offerings, rather than relying on ready-made products (Goulding et al., 2013). More so, brand tribes is that they are organically and voluntarily formed through individual identification with a brand (Tuominen, 2011). To sum up, consumer tribes offer useful means to describe collective experiences of consumption that differ from brand communities and sub-cultures, for instance, they do not need iconic brands as loci for consumption experiences (Cova et al., 2007).

3.5.5 Building Consumer Tribes in Marketing

Brand managers of consumer goods or services ought to understand how tribes are formulated in order for them to tailor make their brands to appeal to tribal associations. In actual fact, understanding why people participate in a particular tribe provides direction in identifying what is important in terms of individual-social links in that specific tribe (Mitchell and Imrie, 2011). Additionally, understanding why people categorise themselves in a specific tribe would serve as a blue print in identifying what is important to them in terms of the individual social links associated with tribal membership (Tuominen, 2011). Essentially, on-going membership in consumer tribes requires constant mutual engagement in learned actions during which meanings are socially conveyed (Goulding et al., 2013).

There are three steps involved in the communal learning process, namely, engagement, imagination and alignment. Firstly, engagement, which explains that as people actively engage in communities of practice, they begin to display competencies required by respective communities (Goulding et al., 2013). Nevertheless, tribal members question and change certain practices when necessary, this corresponds with the notion that tribes are transient and playful (Cova et al., 2007). Secondly, imaginative learning describes people's aptitude as individuals or communities to construct and develop shared self-image that enables community engagement (Goulding et al., 2013). Here, tribal communities combine personal transformation and social structure (Cova and Pace, 2006). Thirdly, alignment refers to the coordination of individual activities such that they affect in and beyond the group to achieve some greater goal or aim (Goulding et al., 2013). Having outlined the steps involved in tribal or communal learning, the next section explores the benefits of marketing to tribes.

3.5.6 Benefits and Challenges of Tribal Marketing

Companies that identify, and effectively position their brands to their brand tribes are likely to benefit tremendously through attracting new customers and retaining old customers. Brand tribalism has been found to have a direct effect on brand relationship (Veloutsou and Moutinho, 2009). This corresponds with previous research that advocated that brand tribalism is more important than brand reputation which affects brand relationship (Oliveria and Brochado, 2013). Equally, it was also found that brand tribalism has a positive relationship to brand relationships in the consumer's perspective (Jurisic and Azevedo, 2011). Research has

shown that brand relationship influences brand loyalty which intention in turn affects purchase intention (Haymeed et al., 2015).

In addition, brand tribalism has a significant effect on brand loyalty which is an antecedent of brand equity (Tsiotsou, 2013). This finding concurs with the argument that brand tribalism constructs a society through which consumption of a brand is vital for creating brand loyalty and ultimately, brand equity (McAlexander, Koenig and Schouten, 2006). Also, the company acts as a support role to the relationships in the group with a sole purpose of building bonded loyalty. Loyal customers are crucial for repeated purchases. Previous research posits that when consumers find brands that are consistent with their self-image, they become brand loyal (Ruane and Wallace, 2015). Correspondingly, it is clear that feeling part of a group through brand consumption offers value to both the brand and the consumer, this value is shown through loyalty to the brand (Taute and Sierra, 2014). Relationships within tribes yield rewards, such as repeat purchase activity and loyalty with the potential of collective action (Cova and Salley, 2008). Another advantage of tribal marketing is that there is no need to locate a market offering as the centralised locus of consumption (Goulding et al., 2013). Instead, tribal communities afford brand managers opportunities to assign their brands as an integral aspect of the learning tribal process (Goulding et al., 2013).

In addition, tribal marketing enables co-creation of value between producers and consumers. Understanding a brand tribe or community enables a company to remain relevant, enables content sharing and allows engagement (Tuominen, 2011). The concept of value creation has been pushed to the limit lately as brands are being transformed into virtual platforms where producers and customers are united by one passion (Cova and White, 2010). One of the basic foundations for success among brands that develop consumer tribes or band communities is the quest for specific value, which is collaboratively produced by consumers and producers and is known as linking value (Cova and White, 2010). Notably, a company's involvement of tribal members is likely to generate operational and strategic benefits in the long run (Tuominen, 2011). By inviting feedback or observing conversations, a company can learn about customer needs and inform new product development. In fact, a company can involve members of a tribe in the co-creation of value through the generation of ideas (Tuominen, 2011).

Brand tribalism creates positive word-of-mouth (WOM) which is free marketing for any brand. Research posits that when people have the need to belong to a group, brand tribalism arises and as a result, word-of-mouth is heightened (Juristic and Azevedo, 2011). Ruan and Wallace (2015) argue that word-of-mouth is an outcome of tribal marketing. Brand members are likely to discuss products they consume in their informal groups (Moutinho and Veloutsou, 2009). Talking about brands to others helps construct self (Carroll and Ahuvia, 2006). Clearly satisfied customers amongst a brand tribe are likely to market and sell the brand on behalf of marketers to potential and existing group members. Considering that tribe members have varying levels of participation in tribes, namely sympathiser, active members, practitioner and devotees, practitioners play a similar role as opinion leaders (Mitchell and Imrie, 2011). They influence the exchange of specific information among group members due to their authority and knowledge (Mitchell and Imrie, 2011). Likewise, research has found that members of a brand tribe are likely to spread positive messages about a brand to others (Taute and Sierra, 2014). Correspondingly, another study also proved that tribal members facilitate word-of-mouth interactions about a brand (Tuominen, 2011).

Apart from partaking in group consumption behaviour, tribal members play a pivotal role for brands. This is an advocacy role. Members are not mere customers, but are advocates for the brand (Haymeed et al., 2015; Dionisio et al., 2008). Tribal members 'talk' on behalf of the brand. This corresponds with the prior assertion that tribal members are not just consumers, but rather are believers and promoters of a brand (Tuominen, 2011). Interestingly, tribal members are viewed as selling voices of the brand and assume the duties of recruiting new members (Tuominen, 2011). In tough times, tribe members will stand as one and fight for the brand and its values which has benefited some companies (Tuominen, 2011). Consequently, some marketers have paid the price in cases where tribes united against a brand (Tuominen, 2011).

Having discussed the potential benefits of tribal marketing, this marketing concept is not without challenges or consequences. First, membership is fragmented and transient (Goulding et al., 2013). Given that consumer tribes emerge and disappear abruptly, it poses a great challenge for brand managers in creating sustainable products to service these groups. Besides, other researchers have suggested that brand tribes are too fragmented, messy and illogical to manage (Goulding et al., 2013). This is in comparison with other subcultures of consumption. Cova and Pace (2006) argue that firms run the risk of losing control of a brand

that is somewhat taken over by group members. In addition, another drawback of tribal marketing is that group members may form an alliance against a brand and the company when they deem fit (Dionisio et al., 2008). Likewise, some tribal brands have suffered the consequences of their members uniting and turning against the brand (Tuominen, 2011). In essence, given the fluid nature of brand tribes, it poses a challenge for brand managers in identifying and building long-term loyal relationships with individuals (Tuominen, 2011).

3.5.7 Tribalism, Brands and Symbolic Consumption

Consumers use and consume brands to create symbolic meanings in their lives. This section discusses how meanings are derived from symbolic consumption. Specifically, it addresses how symbolic meanings are made within brand tribes. At its heart, brand tribalism addresses the human need for belonging (Wright-Isak, 2012). Also self-identity is a crucial feature in consumer tribes.

Group consumption is the post post-modern consumer's means of creating a social link and building bridges with individuals (Cova and Salle, 2008). Consumption practices and value assigned to the consumption of certain products and brands by a tribe provide unique characteristics for brand managers to leverage and explore (Mitchell and Imrie, 2011).This therefore, means that consumer tribes present an opportunity to connect with elusive postmodern consumers (Tuominen, 2011). Additionally, consumers use the brands they consume to demonstrate to the groups to which they aspire to belong that those brands conform to the group's social norm (Ruane and Wallace, 2015). Through consumption of certain brands, group members also demonstrate memberships to other brand groups (Ruane and Wallace, 2015).

Self-expressive brands are also used for symbolic consumption and constructing self-identities. Carroll and Ahuvia (2006) define self- expressive brands as brands that consumers perceive to reflect their inner selves and augment their social selves. Consumers purchase self -expressive brands or adopt tribal consumption in order to fit into a group (Ruane and Wallace, 2015). This symbolic consumption is used to create a social link that is expressive self-identity (Cova and Pace, 2006). Cova and Cova (2002) argue that brand tribalism links to a study of self-expressive brands, as tribalism considers the extent of connectedness between consumers and brands, and suggests self-expressive benefits from the shared experience of brand consumption. The brand tribalism centers on symbolism to demonstrate a member's

allegiance to a group (Cova et al., 2007). Involvement with a tribe is an expression of self-identity, so the consumer tribe shares not only moral values or opinions, but consumption values and preferences (Tuominen, 2011). Furthermore, previous studies have shown that identification with a particular brand community has a positive effect on loyalty to that brand (Cova and White, 2010).

3.6 Background on Brand Love

In recent times, consumers choose their favourite and familiar brands due to the rise in consciousness (Malik, Ghafoor, Iqabal and Schahbaz, 2013). This means that consumers are more empowered to make informed choices and are exposed to a wide variety in the market place. Therefore, providing brands that satisfy consumer needs is no longer enough for sustainable growth in the market place (Arnould et al., 2005). Consequently, businesses must create love for their brands in the minds of consumers in order to stand out from their competitors (Malik et al., 2013). It has been proven that, over time, consumers develop attachments and form strong emotional relationships with brands, these attachments are so intense that consumers feel passionate, find them irreplaceable and experience anxiety upon withdrawal (Batra et al., 2012; Albert et al., 2008, Shimp and Madden, 1988; Garg, Mukherjee, Biswas and Kataria, 2015). Batra, Ahuvia and Baggozi (2012) posit that brand love has its roots in the theories of interpersonal love and relationships.

In general, consumer brand relationships have gained much attention from both academics and practitioners in the last ten years (Ismail and Spinelli, 2012). Currently, research on consumer-brand relationships has utilised terms such as brand attachment, brand sensitivity, brand loyalty, brand trust, brand commitment and recently, brand love (Carroll and Ahuvia, 2006; Batra, Ahuvia and Baggozi, 2012). Recent decades have witnessed an exceptional research interest on love (Ismail and Spinelli, 2012). The majority of studies on love emanated from psychology and sociology; this section introduces a relatively new construct termed ‘brand love’ which is currently receiving attention in consumer research and brand management studies (Albert and Merunka, 2013). This could be attributed to the fact that consumers interact with brands on a daily basis and that brands occupy a salient place in the consumers’ minds (Albert, Merunka and Valette-Florence, 2008). However, there is extensive literature on how brand managers can influence consumers to love their brands.

Sternberg (1986) proposed a triangular theory of love with three components of brand love, namely, intimacy, decision and commitment and passion (Albert, Merunka and Valette-Florence, 2008). Firstly, passion stands for the physical attraction and desire while intimacy relates to the closeness and boundedness (Bertilsson, 2014). In addition, brand commitment refers to the willingness of a consumer to have a long term commitment with the brand (Albert and Merunka, 2013)

Given this sudden interest in researching on love, marketing researchers also found the need to investigate love in a marketing context. For the last two decades, brand loyalty and satisfaction were key fundamentals for brand management strategy and consumer research; there has been a radical shift towards explaining the differences in consumer behaviour (Carroll and Ahuvia, 2006). Contemporary research on brand love aims to interrogate consumer-brand relationships (Heinrich, Albrecht and Bauer, 2012). Similarly, a study was conducted to investigate how brand love could be explained by other consumer-brand relationship constructs (Albert and Merunka, 2013). Academic findings have proved that consumers experience some love-like feelings towards a brand, become attached emotionally and describe this feeling as love (Ortiz and Harrison, 2011). The earliest research on brand love was propounded by Shimp and Madden (1988) who advocated the need for an elaborate distinction between interpersonal love and love for consumption purposes (Sarkar, 2013). The next section provides an account of how this construct is defined in the field of marketing and consumer behaviour.

3.6.1 Definitions of Brand Love

Research posits that consumers developed a strong emotional attachment to brands and may have a feeling, similar to love, toward brands (Iyer, Paswan and Davari, 2016). The love that consumers experience for brands is definitely different from interpersonal love between lover, parent–to child and siblings. The emotional bond that consumers hold towards a brand is likely to trigger purchase behaviour. The above assertion necessitates the need to define what brand love is in a marketing context. Scholars have provided various definitions of brand love. Carroll and Ahuvia (2006), founders of the construct in the marketing discipline, defined brand love as the degree of passionate emotional attachment that an individual has for a particular brand. Similarly, brand love is said to be deeply felt affection for a brand (Bergkvist and Bech-Larsen, 2010). In a nutshell, brand love includes attachment to the

brand, passion for the brand, positive evaluation of the brand, positive emotions in response to the brand and declarations of love for the brand (Carroll and Ahuvia, 2006).

Meanwhile, Anggraeni and Rachmanita (2015) defined brand love as an attitude that consumers hold about a specific brand which includes their ability to think, feel and behave towards a particular brand. Research also posits that brand love pertains to this irrational view of consumption where the consumer constructs multiple realities using consumption experiences (Sarkar, 2014). For the purposes of this study, brand love is defined as the positive attitudes and emotional ties that consumers hold for a given brand or trade name. These definitions regard brand love as a pure emotional and irrational concept (Sakar, 2014). Nevertheless, Carroll and Ahuvia (2006) argue that consumers' love for brands is not as deep as interpersonal love.

Brand love is a concept that appraises a satisfied customer (Castaño and Perez, 2014). This corresponds with research that asserts that brand love is a marketing construct that helps explain and predict variation and desirable post-consumption behaviours among satisfied consumers (Carroll and Ahuvia, 2006). Looking at both these perspectives of brand love, it shows that brand love concerns a happy and fulfilled customer post purchase. Furthermore, brand love encompasses multiple cognitions, emotions and behaviours organised into mental prototypes (Batra, Ahuvia and Bagozzi, 2012). In addition, research also suggests that brand love is affection for a brand or trade name (Bergkvist and Bech-larsen, 2010). This affection is deeply felt towards a brand (Bergkvist and Bech-larsen, 2010).

This brand love is said to be higher for hedonic brands than it is for utilitarian brands (Castaño and Perez, 2014). Interestingly, findings from wine research also affirm that developing brand love is relevant in building loyalty for hedonic brands such as wine (Drennan et al., 2015).

Table 3.1: Definitions of the psychological dimensions of brand love and the interpersonal antecedents of brand love

Brand Love Dimensions	Definition	Related studies
Passion	The psychological, physical or emotional influences that motivate the hot emotional responses and actions in interpersonal relations.	Albert et al., 2007; Breivik and Thorbjornsen, 2008; Yim et al., 2008; Smit et al., 2006; Carroll and Ahuvia, 2006; Chang and Cheing, 2006; Kressmann et al., 2006; Aaker et al., 2004; Fournier, 1998; Shimp and Madden, 1988; Sternberg, 1986
Intimacy	Close, connected, and bonded feelings established in interpersonal relations (Customers' perceived depth of understanding, care and attention to the brand and the brand's understanding, care and attention of the customer and willingness to share feelings and information with the brand)	Watkins et al., 2006; McCullough et al., 2002; Tsang, 2006; Lazarus and Lazarus, 1994
Decision commitment	The decision to love and to allow an affection to exist (short term view); a willingness to continue and act in ways to sustain the brand relationship (long term view); consumers' enduring desire to remain in and support the brand relationship	
Section B Interpersonal antecedents gratitude	Appreciation felt after one has benefited from gifts, altruistic acts or the benevolence of the brand or agents associated with the brand	
Partner quality	A relational partner's capacity to create and sustain productive relationships with customers, including acting in customer's best interest and showing responsibility and reliability as an exchange partner	Breivik and Thorbjornsen, 2008; Aaker et al., 2004; Fournier, 1998
Social support	The extent to which a relational partner (a firm or its employees) undertakes actions to improve customers' general well-being and to show they care or want to help customers	Yim et al., 2008; Buss, 1998; Adelman et al., 1994; Fehr, 1993

Source: Long-Tolbert and Gammoh (2012).

3.7 The Concept of Brand Love

Albert and Valette- Florence (2010) point out that the love feeling relates to several different behaviours, emotions, and feelings in interpersonal relationship literature. The use of interpersonal theories is central to brand love research (Langner, Schmidt and Fischer, 2015).

Research points out that the relationship that results in brand love is deep and enduring and as a result, brand love is irreplaceable (Albert and Merunka, 2013). The above assertion suggests the importance and the possible benefits of brand love development, such as it being long term. Furthermore, brand love is more meaningful and long lasting than mere preference that customers have towards a brand (Anggraeni and Rachmanita, 2015).

Brand love helps in explaining and predicting variations in desirable post-consumption behaviours, such as word-of-mouth and repurchase intention (Batra et al., 2012; Albert and Merunka, 2013; Carroll and Ahuvia, 2006). Furthermore, brand love is characterised by the consumer who is satisfied in a cognitive level, but does not have "any particular feelings" towards the referred brand. Consequently, brand love may cause impossible negative feelings towards the brand (for example: "not liking" or "feeling hate") (Filho et al., 2010).

Furthermore, studies revealed that there are two critical benefits for brand love to consumers; first, a brand helps define their identity and second, the brand helps connect them to other people (Ahuvia, 2015). Moreover, love relationships are deep, significant, and meaningful experiences, thus products or brands, and other items that feel profoundly important to people, are more likely to be loved (Ahuvia, 2015). In contrast, it is common for people to have deep and profound feelings about their sense of identity, and their close social relationships. Therefore, to the extent that products and brands are seen as deeply meaningful to people, it is usually because people have mentally connected them to important social relationships or other important sources of personal identity (Ahuvia, 2015).

3.8 Conceptualisation of Brand Love

Long-Tolbert and Gammoh (2012) argue that the conceptualisation and measurement of brand love in the marketing literature parallels the social psychology perspective on interpersonal love proposed in the triangle theory of love. On the other hand, Unal and Aydin (2013) posit that as is known, consumers' establishing emotional bonds with brands and the bond connecting the self with the product-brand are longstanding issues which have

widespread coverage in the literature. These bonds have been explored in psychology and recently, in consumer behaviour literature. This therefore warrants an inquiry as to how the brand love construct is measured. While brand love has emerged and is receiving attention as an important consumer brand relationship construct, there is extant literature as to what generates a love relationship, for instance, trust and what its behavioural concerns are (Albert and Merunka, 2013). Scholars argue that given that love is a rational construct, it should therefore be linked with other rational constructs (Albert and Merunka, 2013). These constructs could be attachment, loyalty and satisfaction.

Existing marketing literature has applied the idea of love in consumer research with a twofold approach, namely, interpersonal and non-interpersonal love theories (Albert and Merunka, 2013). In actual fact, interpersonal applies to a person-person love criteria to objects relationships (Albert, Merunka and Vallette- Florence, 2008), whereas, non-personal does not compare the two relationships (Albert et al., 2008). Henceforth, it is vital to recognise the difference between the two approaches in order to understand the topic of brand love (Albert and Merunka, 2013). More so, this theory suggests that love has implications for marketing practitioners as it affects initial and repeat purchases (Batra, Ahuvia and Bagozzi, 2012). Given the connection between brand love and impulse purchasing in both initial and repeat purchases, it is essential that brand managers to ensure that consumer "fall in love" with their brands (Batra et al., 2012). Research has shown that this love can be accomplished by enhancing the symbolic and hedonic value of a product (Batra et al., 2012).

Nevertheless, another stream of research advocates for another approach to understanding consumer's love for brands through the self-inclusion theory of love proposed by Aron and Aron (1986); this theory postulates that people need to become part of another to feel loved (Ahuvia, 1993). It is proposed that when a brand reaches both a desired and high level of integration with the consumer's sense of self, that consumer feels love for the brand (Ahuvia, 1993).Third, another perspective examined brand love without referring to interpersonal theory of love and they propose that brand love consists of passion, attachment, positive evaluations of the brand, positive emotions and declarations of love for the brand (Carroll and Ahuvia, 2006). Nonetheless, their measurement is one-dimensional and fails to capture the complexities of the love construct which is acknowledged by other researchers (Albert et al., 2008; Batra et al., 2012).

It is argued that consumers' love is greater for brands in product categories that are (1) hedonic, (2) symbolic, and (3) those that generate stronger emotional responses in comparison to utilitarian brands (Carroll and Ahuvia, 2006 :Ahuvia et al., 2009). Batra et al. (2012), present evidence that brand love is likely to be stimulated by products or brand characteristics, for instance, hedonic products where fun, pleasure or enjoyment are primary benefits, and may also influence loyalty towards the brand. This could be attributed to the fact that consumers are constantly in search of brands that define their social identities. In most cases, these are status related products.

A separate study illustrated that there are ten key components of how consumers experience brand love: great qualities, strongly held values and existential meaning, intrinsic rewards, self-identity, positive affect, passionate desire, a sense of natural fit, emotional bonding and anticipated heartbreak, willingness to invest, frequent thought and use, as well as a long relationship history (Batra et al., 2012). Further, they examined the applicability of theories of interpersonal love to brand love and established that respondents sometimes perceived brand and interpersonal love as comparable (Batra et al., 2012). Though brand love has emerged as a fundamental consumer-brand relationship construct, there is still little understanding about what generates a love relationship between a consumer and a brand and what the behavioural consequences may be (Drennan et al., 2015).

Furthermore, research investigated whether consumers' love for brands can be equated to feeling love for a person and if this love relationship is similar across different countries (Albert, Merunka and Valette-Florence, 2008). The study found that two dimensions of brand love are passion and pleasure and are important for consumers in both the United States and France (Albert et al., 2008). Finally, other researchers postulate that brand love is comprised of self-brand integration, passion driven behaviours, positive emotional connection, long-term relationship, positive overall attitude valence, attitude certainty and confidence, and anticipated separation distress (Batra et al., 2012).

3.8.1 Characteristics of Brand Love

Given the many definitions of brand love, it also entails a number of facets. Consumers' love includes the following characteristics; first, passion for a brand, second, brand attachment, third, positive evaluation of the brand and fourth, positive emotions in response to the brand, and finally, declarations of love toward the brand (Carroll and Ahuvia, 2006). Essentially,

consumer love entails passion for the brand, brand attachment, positive evaluation of the trade name, positive emotions in response to the trade name and finally, declarations of love towards the brand (Albert et al., 2008). Moreover, these features of brand love imply that it is constructed as a pure emotional and irrational relationship concept (Sarkar, 2013).

Research on brand love suggests that brand love is a concept that begins from a consumer experience and from that experience, it can develop into brand love, which can resemble an interpersonal relationship (Batra et al., 2012). A common conception from the definition provided is that a long term choice of trade name is connected to brand love (Ahuvia and Carroll, 2006; Batra et al., 2012).Love is regarded as a very complex emotion, probably the most complex of all (Loureiro and Kaufmann, 2012).

Studies have investigated this construct in psychology however, there is a need to clarify what characteristics constitute brand love in consumer research. One distinct characteristic of brand love is said to be very selective in that, amongst a pool of brands in the market, a select few are loved (Carroll and Ahuvia, 2006). This means that consumers identify a few products amongst the clutter to love. The loved brands arguably play a critical role in the consumer's mind in defining who they are (Ahuvia, 2005). Essentially, emotions and passion are key components in brand love. Brand love is arguably romantic in nature as it consists of passion and emotion (Carroll and Ahuvia, 2006). Recent literature also concurs by suggesting that brand love is romantic in nature, consisting of intimacy and passion (Sarkar, 2013).

3.8.2 Brand Love versus Brand Attachment versus Satisfaction

The attachment consumers have to brands can be described as satisfaction, loyalty and love depending on the degree of affection towards the brands (Kang, 2015). There has been controversy around the distinction between brand love, brand attachment and brand satisfaction. Scholars raise divergent views, some suggesting that these are different names of the same construct, while some advocate for an independent distinction and measurement of these constructs.

One researcher posits that not a year goes by without some reinventions of these two constructs, brand love and brand attachments' characteristics stating that there are several similarities between them that are preserved by marketing theory (Moussa, 2015). This view implies that there is a blurred distinction between brand love and brand attachments available

in literature. Rather, they constantly provide revisions of their constructs which suggest both sides of the same coin. Previous research suggests brand love and emotional attachment to a brand seem very similar (Hwang and Kandampully, 2012). Nevertheless, there are arguably distinctions between these constructs which ought to be outlined. Moreover, distinguishing and examining the differential effects of emotional attachment and love can provide more accurate insights to marketers (Hwang and Kandampully, 2012). Hwang and Kandampully (2012) suggest that emotional attachment is a precursor for brand love as brand love requires the intensity of emotional responses toward an object, while emotional attachment does not necessarily require such intensity. Additionally, other scholars identified a higher-order emotional attachment construct consisting of three factors: affection, passion, and connection. Thus, attachment reflects an emotional bond similar to love (Thomas, MacInnis and Parker, 2005).

Although brand love and satisfaction resemble each other a lot, there is a slight difference between them (Unal and Aydin, 2013). While satisfaction can be realised by means of a one-time interaction of a customer with the brand, the feeling of love can be realised after a few interactions. Against this backdrop, satisfaction level forms a basis for the creation or antecedent of brand love which ultimately establishes and strengthens the bond between the brand and the customer (Unal and Aydin, 2013). As this bond gets strengthened, brand love is created (Unal and Aydin, 2013).

Moreover, brand satisfaction and brand love are different constructs, brand love is perceived as a form of satisfaction, that is, a response experimented by some, but not, from all satisfied consumers as stated by Filho et al. (2010). In addition, brand love differs in many ways from the broader concept of brand satisfaction. First, satisfaction is generally conceived as a cognitive judgment while brand love has a much stronger affective focus (Filho et al., 2010). Second, satisfaction is typically considered to be a specific result of the transaction, whereas brand love is often the outcome of a long-term relationship between a consumer and the brand (Filho et al., 2010). Third, satisfaction is also frequently connected to the paradigm of expectation confirmation while brand love demands neither expectations nor confirmation. Overall, studies have concluded that brand love includes a willingness to declare this love, “I love this brand!” and involves the integration of the brand in the consumer identity (Filho et al., 2010).

Nonetheless, there is one common outcome, that is, consumers show more behavioural commitment in the form of brand loyalty with brand love and brand attachment (Park et al., 2010). Moreover, brand love is a response that is a feeling only experienced by a few satisfied customers and focuses on the consumer's long term relationship with the brand, whereas satisfaction is transaction specific (Kang, 2015). The above arguments illustrate and motivate the necessity for a brand love investigation, given that it focuses on more long term relationships with a brand. In a nutshell, consumers who love a brand are an asset to the firm given the long term relationships that they build and maintain.

Albert and Merunka (2013) undertook a study closely related to brand love, their focus was on brand passion, and they defined it as a psychological construct comprised of excitation, infatuation, and obsession with a brand. The researchers found that brand passion in the form of idealisation and obsessive presence in a consumer's mind led to the desire to sustain a long-term relationship with a brand (Albert and Merunka, 2013). On the other hand, brand love is considered the precursor to brand loyalty and the booster of buying intention (Pawle and Cooper, 2006), while brand attachment entails brand self-connection and brand prominence (Choiu, Hsu and Hsieh, 2013). Furthermore, brand love is a contemporary marketing construct that goes beyond emotional attachment (Thompson et al., 2005). It is also viewed as a construct devoted to and embracing, inter alia, passion for the brand, declarations of love for the brand and positive emotions in response to the brand (Moussa, 2015).

Brand love and brand satisfaction are regarded as independent constructs by scholars. To add, brand love advocates assert that it is a mode of satisfaction flushed with emotional colours (Moussa, 2015). On the contrary, researchers postulate that brand love differs from satisfaction due to the fact that it is more affective, not transaction specific, but the outcome of a nurtured consumer-brand relationship (Carroll and Ahuvia, 2006). Satisfaction is linked to the expectancy disconfirmation paradigm which is an absent feature of brand love because the willingness to declare love is evident (Carroll and Ahuvia, 2006).

Apart from the controversies of brand love versus brand attachment, some scholars argue about the notion of commitment or lack thereof in the brand love and brand loyalty outcomes. This controversy requires a closer examination. One stream of research argues that the concept of brand love predominately distinguishes itself through the view of passion/emotion

or lack or commitment when weighted against brand loyalty (Roy et al., 2012). This way of understanding brand love confirms that commitment is a prerequisite for loyalty whilst brand love may not always yield loyalty, as argued by other scholars (Roy et al., 2012).

3.8.3 Antecedents of Brand love

In order for consumers to love a brand or a trade name, certain factors need to be present. There is extensive literature that investigates the predictors or antecedents of brand love (Rodrigues and Reis, 2010). Additionally, factors that drive brand love and its outcomes have received limited attention in existing literature (Carroll and Ahuvia, 2006; Albert and Merunka, 2013; Batra et al., 2012). The few studies that exist in literature are linked to hedonic consumption and self-expressive brands (Rodrigues and Reis, 2010). Gaining knowledge about the antecedents of brand love can assist with the, for instance, creation of superior wine marketing strategies that produce growth in sales and profits (Drennan et al., 2015). This could be particularly beneficial for marketers of imported wine brands entering the South African consumer market who are known to love their locally produced wines.

Firstly, interpersonal relationship literature suggests that respect is viewed as an indicator of love. When a person receives respect from a partner, they are likely to love that person (Jaydeep, Biswas and Kataria, 2015). Respect is considered as one of the ways to maintain close relationships between consumers and brands since respect includes compassionate, moral and responsive behaviour towards consumers (Jaydeep et al., 2015). Thus, consumers are likely to develop love for a brand when they are respected by the brand (Jaydeep et al., 2015).

In today's competitive world, consumers require products or brands that offer additional utilitarian benefits, but with a unique experience. Brand experience entails affective, sensory, intellectual and behavioural responses elicited by brand-related stimuli (Jaydeep et al., 2015). For instance, a high end cosmetic brand (Bobbi Brown) may create a great ambiance in their store in order to give their customers a great experience and thereby, foster brand love. The affective responses refer to the sentiments or feelings evoked by the brand and its emotional relationship with consumers (Morgan-Thomas and Veloutsou, 2013).

Affective commitment is also believed to be an antecedent of brand love. Affective commitment refers to the extent to which consumers are emotionally attached to, identify

with and are involved with the brand (Fullerton, 2005). Therefore, consumers with affective commitment develop an emotional attachment and feel a sense of identification, loyalty, shared values and trust for a brand (Jaydeep et al., 2015). Research found that consumers who are in love with a brand prefer to continue their relationship out of their own desire (Batra et al., 2012; Albert and Merunka, 2013).

In addition, research demonstrated not only that self-expressive brands increase consumers' brand love, but also that hedonic aspects of brands promote brand love more than utilitarian aspects of brands (Carroll and Ahuvia, 2006). Their findings suggest that hedonic products like fashion products are thus more related to brand love than are utilitarian products. In essence, the hedonic aspects connoted in luxury brands and the resonance of self-image in luxury brands will influence consumers' brand love (Hwang and Kandampully, 2010). In actual fact, consumers' love for luxury brands can increase when consumers perceive the brands as expressing important parts of the self (Hwang and Kandampully, 2010).

Brand identification is regarded as a factor that leads to brand love. It is defined as the extent to which consumers see their own self-image as overlapping the brand image (Baggozi and Dholakai, 2006). Research suggests that loved objects are central to people's identity, therefore a consumer is likely to love a brand more if he or she identifies with it (Ahuvia, 2005). However, there should be a deeper connection between the consumer and their ideal identity (Bergkvist and Bech-larsen, 2010). Recently, studies have also found that brand trust and brand identification positively influences brand love (Albert and Merunka, 2013).

Sense of community also predicts brand love. Social technologies allow brands to build online network-based communities that are specialised, geographically dispersed, based on a dynamic network of relationships among participants sharing a common focus (Dholakai, Baggozi and Pearo, 2004). Brand pages on Facebook, Instagram, and Twitter are examples of such communities and they offer consumers the platform to interact about a brand. These interactive, personalised communication spaces encourage consumer engagement, allow users to satisfy self-definitional needs and play a vital role in the consumer-brand's affective relationship building process (Wallace, Buil, and de Chernatony, 2014). In addition, online brand communities enable brand users to discuss the brand, to personalise product features, make product and price comparisons and ultimately purchase (Vernuccio, Pagani, Barbarossa

and Pastore, 2015). Consumers' love should be greater with brands that care about their identities (Rodrigues and Reis, 2010).

3.8.4 Benefits of Brand love to Marketing practitioners

Both academics and practitioners advocate the importance of the brand love construct to customer-brand relationship building (Vlachos and Vrechopoulos, 2012). There is substantial evidence that brand love can lead to beneficial outcomes for marketing practitioners which ultimately leads to profitability and loyalty (Unal and Aydin, 2013). Within the extant literature on brand love, there is empirical evidence that it influences several marketing variables (Rodrigues and Reis, 2010). Additionally, brand love provides an inimitable advantage to the firms to stand intense competition in the market place (Unal and Aydin, 2013). Typically, brand managers aim to provide brands that consumers will love and prefer over their competitors within the same product category in order to remain profitable. In actual fact, brand love is a contemporary marketing construct that has been shown to influence fundamental marketing variables, such as, brand loyalty, word-of-mouth and purchase intentions (Drennan, Bianchi, Elizondo, Loureiro, Guibert and Proud, 2015). This section discusses the importance of brand love to industry practitioners.

Firstly, literature suggests that brand love is linked to positive word-of-mouth (Carroll and Ahuvia, 2006; Unal and Aydin, 2013). By the same token, other studies in the field established that the concept of brand love helps in explaining favourable post consumption behaviour, such as repurchase intention and word-of-mouth (Batra et al., 2012; Albert and Merunka, 2013; Anggaraeni and Rachmanita, 2015). Similarly the emotional bond that consumers hold towards brands (brand love) is likely to yield positive outcomes such as word-of-mouth (Kang, 2015). Word-of-mouth is a powerful and inexpensive promotional tool that can attract potential customers to a company's brand. Positive or negative word-of-mouth affects how consumers perceive any phenomenon in general, this is no exception with products and services. Positive word-of-mouth is likely to generate more brand lovers to the company and vice versa. This is true especially in brand tribes, word-of-mouth is bound to drive brand love or also attract new brand lovers.

In addition, this marketing construct was found to influence other branding related concepts such as brand loyalty (Anggaraeni and Rachmanita, 2015; Albert, Merunka and Valette-Florence, 2008b; Carroll and Ahuvia, 2006; Thompson et al., 2005). Correspondingly,

research also found that brand love is linked to significant levels of loyalty (Carroll and Ahuvia, 2006). Likewise, further research emphasised that brands that stimulate deep love from their customers are likely to achieve loyalty to the brand and gain a sustainable competitive advantage over other brands that simply use brand loyalty programmes (Yang, 2010). Consumers that develop love towards certain brands tend to build long term relationships with each other and the company. This long-term relationship derived from brand love is likely to build brand loyalty and repeat purchases (Albert and Merunka, 2013; Roy, Eshghi and Sarkar, 2012). Additionally, findings of another study validate that developing brand love is pertinent in building loyalty for a hedonic product, such as wine (Drennan et al., 2015). In fact, when an individual loves their partner or child they are most likely to be loyal and protective over them. Likewise, when a customer is attached to a brand with love, he/she does not change it easily, in this case, creating a love towards a brand is crucial for firms in order to beat their competitors (Unal and Aydin, 2013). This same analogy can be used in a consumption or buyer and seller relation, a consumer who loves a brand tends to be loyal to that brand and makes purchase decisions.

Brand love also aids consumers to decide their preferences amongst a pool of products. Given that consumers have endless possibilities when it comes to product choice, the choice is made easier if the object is a brand love (Rodrigues and Reis, 2010). Moreover, brand love is also said to be more meaningful and long-lasting than a mere preference that the customer has towards a brand (Anggaraeni and Rachmanita, 2015). When consumers declare feelings of love towards brands, it becomes a form of commitment towards that specific trade name. One would argue that in favour with literature to say true brand lovers maintain long lasting preferences towards favourite brands.

Today's knowledgeable and information savvy consumers tend to prefer brands that are actively engaging. Contemporary research demonstrates that brand love as a fundamental and direct predictor of active engagement (Bergkvist and Bech-Larsen, 2010). Brand love is arguably the most prominent factor in building customer engagement (Sarkar and Sreejesh, 2014). Nonetheless, brand love is not the only predictor of customer engagement (Sarkar and Sreejesh, 2014). Understanding brand love as a marketing construct will assist managers to formulate better marketing strategies to increase customer engagement which is a most sought after experience by consumers.

Furthermore, research studies have examined and proved that consumers who are emotionally attached to brands are most likely to continue to purchase the same brand (Batra et al, 2012; Carroll and Ahuvia, 2006). This is called repurchase intention. Likewise, another study found that the relationship held by brand lovers is likely to generate repeat purchases (Albert and Merunka, 2013). Furthermore, consumers are willing to pay premium prices for loved brands (Thomas et al., 2005). Heinrich et al. (2012) also found corresponding evidence about increasing consumers' willingness to pay a price premium and to forgive potential brand failures. These findings are important for academic researchers to better understand consumer behaviour and for marketers to create value through brand relationships (Heinrich et al, 2012; Rauschnabel and Ahuvia, 2014). Essentially, this enables the execution of appropriate marketing strategies that will encourage consumption and purchase, especially for hedonic products.

Evidently, it has been found that brand commitment is also another beneficial outcome of brand love (Batra et al., 2012; Albert et al., 2008). Interestingly, a study on interpersonal love items also found that brand love influences and leads to brand commitment (Albert and Valette-Florence, 2010). Despite commitment being conceptualised differently in other disciplines, contemporary research on consumer-brand relationships places emphasis on affective and continuance commitment (Fullerton, 2005). This therefore means that consumers who love a brand are more inclined to be committed and loyal to the trade name and firm. This could be for longer periods and is related to brand loyalty and purchases of a brand (Caroll and Ahuvia). Despite the emphasis on brand love being beneficial to companies, it is also important for consumers. Brand love can build a consumer's identity (Carroll and Ahuvia, 2006).In sum, this significant evidence implies that brands that are loved by consumers are bound to receive more loyalty and free advertising from existing users. Knowledge about satisfied consumers' brand love is likely to predict and enhance understanding of post consumption behaviour (Carroll and Ahuvia, 2006). Marketing managers ought to come up with good brand perceptions in the target consumer's mind and also execute effective marketing campaigns that evoke emotions of brand love.

3.8.5 Other Research on Brand Love

Fournier (1998) indicates that consumers develop and maintain strong relationships with brands and proposes six major facets of relationships, including love and passion, which was defined as a richer, more lasting, deeper feeling than a mere preference (Albert et al., 2013).

A separate study outlined the theoretical context for the brand love construct in the place or tourism domain. The main premise of the study was to conceptualise the construct in a place setting, given that places are regarded as brands (Swanson, 2015). It was conducted by means of semi-structured consumer interviews, consumer collage creation and volunteer – employed photography (Swanson, 2015). Findings from the research found thirteen themes through which consumers expressed their love for the places under study, the categories were classified into antecedents, relational involving relationships, experimental themes relating to being at the place and outcomes (Swanson, 2015). Conversely, it was found that place consumers do not regard place brands and the love experienced for places is a complex mix of love for the place itself, and love for the brand values attached to the place (Swanson, 2015). This therefor proves that brand love varies between different product categories in the consumers' mind-sets. It is vital that marketers identify how to drive and maintain brand love through appropriate marketing strategies to their target market.

3.8.6 Brand Love and Wine

The wine culture has strong ancestral roots with the Roman Empire having incalculably influenced the growth of viticulture and oenology (Loureiro and Kaufmann, 2012). Wine is associated with love, pleasure and poetry (Loureiro and Kaufmann, 2012). In China, for example, wine is a prestigious product usually reserved for celebrations and symbolic status consumption (Li, Hu and Jun, 2006).

In general, both local and international wine marketers are under immense pressure to attract and retain brand lovers. Loureiro and Kaufmann (2012) define brand love of wine as the degree of passionate emotional attachment a satisfied consumer has for a particular wine brand. An increasing stiff competition in the wine industry globally has augmented the need for wineries to develop improved wine marketing strategies to achieve repurchase and loyalty from consumers (Drennan et al., 2015). It is therefore vital that wine makers and retailers need to understand the factors that lead to brand love for any given wine brands. Also, this

type of research can guide wineries or producers' aspects to better suit consumer needs, which due to the hedonistic characteristic of the wine product, have to be differentiated from those relating to other brands (Loureiro and Kaufmann, 2012).

Most research on brand love has been predominately on functional products' individual features in developed countries (Drennan et al., 2015). These studies predominantly investigated the antecedents and key characteristics of brand love on functional products. Nevertheless, in the context of wine purchase, consumers' decision-making is often an unconscious process entailing, in fact, many features or attributes entangled in complex combinations (Loureiro and Kaufmann, 2012). To date, research has only provided limited understanding on how consumers actually compare and then choose or recommend wines by focusing on individual facets, such as, brand, country of origin, price, label, colour, specific consumer segments, gender, or cultural contexts (Loureiro and Kaufmann, 2012).

Particularly, one research found that there were differences in the antecedents and outcomes of brand love amongst consumers in Australia, Chile, France, Mexico and Portugal (Drennan et al., 2015). Correspondingly, hedonic and self-expressive brands were found to have positive effects on brand love (Swanson, 2015). Given that brand love is a recent concept in academic research, this construct is closely linked to hedonic consumption, where the consumer engagement with the subject of consumption is strong (Rodriguez and Reis, 2010). Clothing and wine fall under this type of consumption.

3.9 History of Brand Preference

Brand preference is the basis of attitude research, and it is consistent with the affective, behaviour, cognitive model (Tsai, Chang and Ho, 2015). Brand preference is formed based on brand awareness and brand emotion which refers consumers' reaction to a product (Tsai et al., 2015). Mulyanegara and Tsurenko's (2009) research into brand preferences has gained much scholarly interest since the early 1970s, essentially when researchers began to investigate the antecedents of brand preferences over a different range of product categories. Existing research on brand preference probed choices and preferences across different product categories (Mulyanegara and Tsarenko, 2009). Specifically, brand preference has been extensively studied in the fashion industry, imported brands and service industry.

3.9.1 Brand Preference Definitions

Brand preference has been defined differently by various scholars in the marketing discipline. One of the commonly used definitions of brand preference suggests that it is a concept that includes multi-dimensional constructs, cognitive, affective, and behaviour (Tsai et al., 2015). Hellier, Guersen and Rickard (2003) defined brand preference as the extent to which a customer favours the designated service provided by the present company in comparison to the designated service provided by other companies. To add, this brand is usually in his or her consideration set, this consideration set refers to brands that a consumer would consider buying in the near future (Hellier et al., 2003). However, this definition of brand preference gives an impression that brand preference is related to loyalty. Furthermore, other scholars believed that brand preference is the choice of a product or service of a certain brand made by customers when consumers face similar kind of products or service (Tsai, Chang and Ho, 2015). Likewise, Jin, Lee and Jun (2015) postulate that consumer' values and beliefs for products and services, measured for individual brands, significantly define brand preference. Consequently, brand preference is further defined as the behavioural tendency that reflects a consumer's attitude towards a brand (Ebrahim, Ghoneim, Iran and Fan, 2016).

Brand preference is further defined as the choice of a service or a product of a certain brand made by a consumer when faced with similar kind of products and services (Hellier et al., 2003). Similarly, other researchers view brand preference as a consumer's tendency towards a brand over various other brands, based on the significant beliefs that the preferred brand will provide more benefits than other brands at a given time (Mitchell and Olson, 1981). For the purposes of this study, brand preference pertains or relates to the consumer's choice or bias towards a given brand amongst a pool of closely related brands. Most importantly, preference is a type of attitude performance which directs purchase decisions (Tsai, Chang and Chung-Ho, 2009). Hence, it is important to investigate what motivates and sustains consumers' preferences, given that they have a great potential to propel purchase activity. Tsai et al. (2015) state that from a psychological point of view, consumer preferences include three main factors: cognitive, affective, and behavioural.

3.10 Benefits of Brand Preference for Marketing Managers

Mulyanegara, Tsarenko and Anderson (2009) postulate that, in marketing, consumer preferences are considered a crucial concept, given that they underpin consumer choice. As such, understanding the factors shaping brand preference may help marketers frame and execute effective communication and positioning strategies (Yang, Allenby and Fennell, 2002).

Most importantly, in establishing brand preference, consumers compare and rank different brands by focusing on their uniqueness (Jin and Weber, 2013). Yasar, Isik and Calisir (2015) state that there are a broad variety of efforts and theories that aim to describe the factors that influence the consumers and their behaviours when making purchasing decisions. The fundamental justification of investigating consumer behaviour is to determine patterns of consumers' attitudes in their decision to buy or to ignore a product (Yasar et al., 2015). Consumers' brand preferences represent a fundamental step in understanding consumer choices. A deeper understanding of such preference dynamics can help marketing practitioners execute effective marketing campaigns and build a long term relationship with consumers (Ebrahim, 2013). Research also confirms this further and suggests that, knowing the pattern of consumer preferences across the population is a critical input for designing and developing innovative marketing strategies (Ebrahim, 2013). Furthermore, brand preference is closely related to brand choice that can facilitate consumer decision making and activate brand purchase (Ebrahim, 2013). It is believed to uncover the heterogeneity of consumer choices leading to efficient market segmentation strategies (Ebrahim, 2013). However, forecasting consumer's preferences between brands is not an easy task but requires marketing research into consumers' preferences and also customer-made marketing campaigns to influence consumer brand preference.

Consumers usually have established tastes and preferences when entering the market with a variety of brands. In actual fact, such preferences are developed by memory-based expectations of attributes known as product schemas which are embodied by brands, celebrities, and product categories (Chedi, 2008). In addition, consumers' identification with a particular culture will influence their preference for products or brands associated with their culture (He and Wang, 2015). The extent of cultural identity and consumer ethnocentrism influence brand preference and brand purchase intention differently. One study found that a

consumer's attachment to their cultural heritage and national symbols will transcend directly into product or brand preference for domestic products over imports (He and Wang, 2015). Simply put, ethnocentric consumers are least likely to prefer foreign brands over their local brands. Consumption of local brands serves as preservation of their culture and heritage. This is true especially with ethnocentric people like the Chinese who are known to preserve most of their culture through their dressing, food and observing their religious ceremonies regardless of where they are in the world. Nevertheless, liberal consumers are not necessarily confined to local brands, but they seek and prefer imported products that satisfy their global identities.

3.11 Conceptualisation of Brand Preference

In the past, brand preferences have been explained using traditional models which mostly focus on consumer's cognitive judgement of attributes of a brand on a rational basis (Ebrahim et al., 2016). The Fishbein's model is one of the consumer attitude models used to measure consumer preferences (Tsai et al., 2015). The aforementioned model postulates that the consumer's preference for a brand is a function of their cognitive beliefs about the brand's weighted attributes. Nevertheless, the model has been criticised for a number of reasons, first it is measured as a single value and focuses solely on utilitarian beliefs as the key motivation of consumer evaluation responses (Ebrahim et al., 2016). Second, it ignores the emotional aspects to consumer responses (Agarwal and Malhotra, 2005). Third, the narrow view of the Fishbein's model arguably limits its applicability to most utilitarian products (Ebrahim et al., 2016). In addition, the psychological view suggests that the brand preference construct is conceptualised as a concept that includes multi-dimensional constructs, cognitive, affective, and behavioural (Tsai et al., 2015).

3.11.1 Antecedents of Brand preference

There are a number of factors that influence consumers to prefer certain brands over competitors. All these factors vary between different product categories, for instance, preference towards symbolic products would differ from preference towards utilitarian brands. This section provides a discussion on the antecedents of brand preference in existing literature. These factors vary from one product category to the next. Also, customers' brand preference are influenced by brand equity and marketing mix elements (Raj, Sasikumar and Sriram, 2013). Theories of brand preference place emphasis on relative advantage, risk, cost,

communicability, profitability, social approval, complexity, compatibility, observability, trialability, and product characteristics on brand preference (Raj et al., 2013). However, the importance of each antecedent depends on the nature of goods or services under consideration, culture and social characteristics of the consumers of the different brands (Raj et al., 2013).

Raj et al. (2013) put forward that brand preference or brand adoption as one of the elements of brand equity is influenced by various factors such as price, store image, distribution intensity, price promotions and word-of-mouth. For instance, high end boutique or designer stores with a great image that appeals to consumers may positively influence brand preferences within that target market. Likewise, consumers' brand choice is found to be significantly influenced by the promotional efforts carried out by the firm (Raj et al., 2013).

Research studies have shown that through comprehensive brand experience, companies are able to enhance brand preferences and purchase intentions (Tsai, Chang and Chung-Ho, 2015), given that society has evolved from functional driven purchases to experiential based purchases (Tsai et al., 2015). The former aims to develop new products with adequate communication with customers (Tsai et al., 2015). In addition, gaining knowledge about consumers' ideal brand experiences is a significant brand marketing strategy that can be used to boost or influence brand preference. Brand experience could involve receiving promotional material (coupons and vouchers) of the brand and watching a TV advertisement. In addition, research has found that consumers tend to have a lasting recall of brand experience and ultimately develop trust (Tsai et al., 2015). These branding outcomes depict the importance of creating superior brand experiences for consumers.

In addition, self-concept congruence is considered as a factor that influences brand preferences. An empirical study posits that consumers define themselves through products with a particular personality to express, maintain and strengthen their self-concept (Tsai et al., 2015). It therefore means that brands that are congruent with a consumer's self-concept have a significant influence on the consumer's preferences. Ideally, when a consumer identifies with a brand, they are likely to choose it over a wide array of brands in the market.

Furthermore, the self-congruity theory postulates that behaviour of consumers is partly determined by an individual's comparison of their self-image with the image associated with the brand (Mulyanegara and Tsarenko, 2009). Self-congruity plays a fundamental role in

fashion marketing as it has been proved that young consumers are mostly influenced by their self-concept when it comes to preferences and purchases (Mulyanegara and Tsarenko, 2009). Young people tend to define themselves through their clothing, food and hang-out spots. In South Africa, for example, young fashion-conscious consumers tend to prefer to purchase clothing from affluent malls that host boutique and international retailers such as Zara, Forever New and River Island.

Values are also an antecedent of brand preference. The values-brand congruence is arguable closely related to the self-concept congruity discussed earlier. In essence, the values-brand congruence concept proposes that brand preference is based on a congruity between human values symbolised by a brand and the values that individuals endorse (Mulyanegara and Tsarenko, 2009). The advocates of the brand value congruence place emphasis on consumer values being decider for brand preferences. For example, if a consumer's values centre on status consumerism, that consumer is likely to prefer conspicuous brands that are congruent with satisfying those values. In this regard, it is pertinent for marketers to research about their target market's values in order to design and provide appropriate brands.

To add, brand image congruity has also been found to be an influencer for brand preferences. Hu, Liu, Wang and Yang (2012) argue that brand image congruity happens when a brand image matches consumers' expectations. Simply put, the brand should be in line with the consumers' ideal need or want. Also, this brand image congruity is two-fold. First, functional image congruity occurs when a brand meets the set criteria that the consumer prefers, conversely, symbolic image congruity occurs when a brand's performance on symbolic attributes match consumers' desired level (Hu et al., 2012). This illustrates that consumers respond to brand image congruity differently, for instance, highly technical products are likely to be valued for their functional image congruity as opposed to hedonic products. Consumers of technical products are concerned with the utilitarian aspect.

In addition, brand emotion is an antecedent of brand preference, it follows that the reaction of consumers to a certain product, for example, the preference, dislike, appreciation of the product quality, trademarks, packages, service, and reputation, among others (Tsai et al., 2015). These brand emotions have irrational tendencies and thus consumers may prefer favourite objects, ignoring rational thinking.

Furthermore, customer satisfaction is also an antecedent of brand preferences. Previous research illustrated that high customer satisfaction strengthens the memory of the brand and enhances brand preference (Tsai et al., 2015). Any satisfied consumer is likely to be a brand advocate and be a source of word-of-mouth advertising. Satisfied customers are likely to positively influence their peers about the brand and be actively involved in marketing the brand. For the purposes of this study, one can argue that satisfied consumers can influence brand preference among other members of the brand tribes. Specifically, when symbolic consumption is involved, such as consuming imported wine, satisfied consumers may provide free marketing for other tribal members who are probably sceptical about splurging on expensive wine.

Furthermore, there is extant literature that suggests "name similarity effect" has been found as a contributor to brand name preference and the formation of consumer brand equity (Howard and Kerin, 2013). Surname brand preference effect refers to a consumer's preference for a brand that is stronger than any other trade name in a given product category, or willingness to advocate that brand name that bears their surname (Howard and Kerin, 2013). It is argued that if possessions can be incorporated into and become central to an individual, the preference for a brand that carries one's surname might be expected (Howard and Kerin, 2013). This is usually true with high involvement brands (Howard and Kerin, 2013). There is little information about the surname effect on low involvement brands (Howard and Kerin, 2013). This could be attributed to the fact that consumers do not over-think the purchase of low involvement brands and the availability of many options. Contrary to the former assertion, the same study found that the surname brand preference effect was greater for low involvement compared to high involvement products (Howard and Kerin, 2013). It is reasonable to infer that low involvement products require less complicated decisions which may not be the only determining factor for high involvement products.

In South Africa, for example, the same brand preference effect may be a complicated task for marketers to achieve, given the diverse nature of the country. Some consumers may find that their surnames are not represented by the marketer's brand and then reject the product. However, Coca cola, a multinational beverage company, employed the 'share a Coke' campaign in South Africa and incorporated popular local names on their 500ml coke drinks. There was a buzz and excitement around this campaign, consumers flocked to the stores and garages to purchase coke drinks with their names on the bottle. One could infer that this

marketing strategy triggered brand preference among soft drink lovers. In this particular study, imported wine is considered a high involvement product given the status and symbolic consumption associated with it, therefore name similarity effect would probably affect positively brand preferences.

Additionally, brand personality is believed to be a predictor of brand preference. It plays a pivotal role in instances where self-congruence is not evident (Jalivand et al., 2016). In fact, brand personality can serve as a differentiator between brands and operate as a key determiner of consumer preferences and usage (Jalivand et al., 2016). This cluttered market calls for well-defined brand personalities that will resonate with the consumer and thus become the preferred brand. It is important to note that brand personality perceptions aid the consumer with the organisation of brand knowledge (Jalivand et al., 2016). For instance, when a marketer targets their brand to young people, the brand personality is expected to be hip and fun so as to grab the young consumer's attention and become the preferred brand. MAC cosmetics has mastered their brand personality, they target young, fun and outgoing women. As such, they have used Miley Cyrus and Rihanna, amongst others, as their celebrity endorsers.

Further, corporate personality which is closely related to brand personality arguably influences brand preference. Corporate personality is known to shape corporate image in the minds of the consumers, consumer's preferences may be heightened for brands that have a congruent corporate personality and brand personality (Banerjee, 2016). Put another way, besides a consumer personality traits, both brand personality and corporate personality of the marketer may influence consumer preferences.

A study investigated the different impacts on consumer preference and purchase behaviour regarding domestic versus import brands (He and Wang, 2015). This study demonstrated that cultural identity and consumer ethnocentrism are predictors of brand preference. Consumers' identification with a certain culture affects their preference for brands, for instance, a well-established sense of cultural identity makes it impossible for a foreign brand to thrive. Furthermore, a consumer's attachment to his or her national identity has an adverse effect on preference for domestic versus imports (He and Wang, 2015). For instance, South Africans are proud of their heritage and are exposed to great quality of wine brands that compete globally. Hence, there is a possibility of greater brand preference or bias towards locally

produced wines. In spite of all this, other consumers may be open to diverse global wine brands which are usually perceived and associated with exceptional quality. Additionally, findings indicate that both pricing information and brand strength impacts consumer preferences and hence, the understanding of the relationships between brands and effective branding strategies (Kemp and Bui, 2011). For example, luxury brands' consumers are likely to prefer premium priced brands that help them stand out in society.

3.11.2 Outcomes and Benefits of Brand Preference

Customers demonstrate their affinity for a brand or service by purchasing the same branded products or services or by showing preference towards a particular brand, bringing firms higher market share and higher profits (Jin, Lee and Jun, 2015). It is any marketer's goal to be the preferred brand amongst the clutter of products in the market. This improves sales and other strategic benefits such as increased market share. The following section provides an account of possible positive outcomes of brand preference to marketing managers.

Firstly, brand preference more often than not results in brand advocacy. A brand advocate is an individual who says favourable things about the brand and recommends it to others (Howard and Kerin, 2013). Customer satisfaction, which is a predictor of brand preference, was proved to be positively related to brand advocacy. Moreover, one expects brand advocacy to be more rigorous when there is a surname match preference. Secondly, brand preference is said to generate repurchase intention. Thirdly, brand preference is mostly likely to result in positive word-of-mouth. Jalivand, Pool, Vosta and Kazemi (2016) define word of mouth as informal communications directed at other consumers about the ownership and usage of goods and services and/or their sellers. Essentially, it involves the free marketing (promotion) that existing consumers share with their peers and other potential consumers about a particular good or service. Consumers who prefer a brand are highly likely to spread positive messages to their peers or consumption group, thereby, increasing market share. WOM is a pertinent concept to understand because a number of studies have illustrated that it has an effect on customer choices as well as post purchase perceptions (Jalivand et al., 2016). Consumers that prefer and are brand loyal are in a better position to provide positive recommendations on behalf of the marketer to fellow members in their consumption groups.

3.11.3 Related Studies Research

Brand preference is usually shown by consumers' frequent purchase of a similar brand; advertising and other marketing communications may influence this. A number of studies have investigated different aspects to this brand preference. One study aimed to survey the impact of brand design elements, such as logo shape, type of font, colour and brand name on brand masculinity and femininity perceptions, consumer preferences and brand equity (Lieven, Grohmann, Hermann, Landwehr and van Tilburg, 2015). The fact that consumers perceive brands in terms of masculinity and femininity suggests that they recognise and interpret masculinity and femininity in brands, thus their preferences are influenced (Lieven et al., 2015). Findings from this study illustrate that brand design elements significantly influenced brand masculinity and femininity perceptions (Lieven et al., 2015).

In essence, this means surveyed consumers are drawn to brands with well pulled together branding elements, such as colour and packaging. For instance, a luxury make-up brand could place their products in attractive and glamorous packaging that entices a buyer and also symbolises a classy product. This will, in turn, attract the ideal target market of women who prefer classy and sophisticated products. Image and class oriented consumers are likely to prefer and pay premium prices for such brands. Consequently, these in turn, are significantly related to consumer preferences and brand equity (Lieven et al., 2015). To add, highly feminine or masculine brands evoke a higher brand preference. Most importantly, the study found that greater congruence between brand masculinity or femininity and product category masculinity enhances brand preference (Lieven et al., 2015).

Additionally, another study sought to examine the moderating roles of brand name attitude and product expertise on the impact on corporate rebranding strategies on consumer brand preference. There are two rebranding strategies identified, first, evolutionary rebranding which involves minimal adjustments to a brand contrariwise, second, revolutionary rebranding entails a complete overhaul and perhaps a change in the brand name (Le, Cheng, Kuntjara and Lin, 2014). Findings suggest that the use of evolutionary rebranding strategies is superior in enhancing consumer brand preference (Le et al., 2014). In this regard, the effect of rebranding strategy on consumers' preference vary depending on the level of attachment to the original brand, evolutionary rebranding is deemed ideal for consumers who are more attached to the original brand and ultimately, strengthens preference (Le et al., 2014).

In spite of the dilemma pertaining to rebranding strategies, scholars call for research that helps clarify situational conditions that generate higher levels of brand preference when implementing rebranding strategies (Le et al., 2014). It follows that brand name attitude and product expertise is deemed to moderate the effect of corporate rebranding on brand preference.

Equally importantly, a different study aimed to investigate whether product placement influences brand preferences amongst tweens. Research indicates that a limited exposure to a product not only introduces the product but also increases memories and levels of preference (Toomey and Francis, 2013). To add, findings illustrate that when a product's placement is subtle, it tends to produce better results (Toomey and Francis, 2013). These results may include brand preferences.

Additionally, another research was carried out to identify the factors influencing brand preference in the economy segment of SUVs and MUVs (Raj et al., 2013). In light of the study findings this study found that marketing mix elements and associated brand equity from the individual customer's perspective is crucial because it suggests both strategies and tactics, and areas where research can be useful in managerial decision making to increase customer preference for the brand (Raj et al., 2013). Interestingly, they found price to be the most crucial antecedent of brand preference in the SUV and MUV category followed by product quality and product features (Raj et al., 2013).

3.11.4 Brand Preference and Wine

Gunay and Baker (2011) posit that a focus on consumer needs is a major source of competitive advantage and improved business performance and hence, the need for firms to understand their consumers which essentially entails analysis of the dynamics that influence buying behaviour and consumer preferences. Given the complex nature of a wine product, it is fundamental to understand what consumers go through before actually preferring or choosing a wine type. Firms that are consumer oriented ought to focus on improving satisfaction which can be attained by identifying the target market's dynamics and details (Gunay and Baker, 2011). It can therefore be inferred that satisfied customers are most likely to prefer a wine company's brand. In addition, modern society is characterised by the strong role of image and message exchange, consumer preferences for wine are more and more influenced by a set of intangible attributes, and the use value of the product makes room for

its symbolic value. Similarly, another study revealed that Generation Y consumers' wine preferences and purchase decisions are determined by their disposable income, the social acceptability of their purchase decisions and the wine brand image, among others (Bester, 2012).

3.12 History of brand credibility

Brand credibility has its origins in source credibility literature, when brands entail credibility then this stands for brand credibility (Sheeraz, Iqbal and Ahmed, 2012). Understanding how brands influence consumers and their choice processes has attracted much research attention in the fields of marketing and consumer behaviour in the last two decades (Bougoure, Russelle- Bennett and E-Hasan (2016). Consumer choice is predominantly influenced by the credibility of a brand. The notion of brand credibility was inspired by Erdem and Swait who examined consumer-based brand equity, based on the signalling theory (Baek and King, 2011). This originated from early research which primarily focused on communicator or source credibility (Bougoure et al., 2016). Brand credibility is a brand characteristic that explains consumer choice processes (Bougoure et al., 2016). Brand credibility is closely related to source credibility in literature (Sheeraz, Iqabal and Ahmed, 2012). The dominant perspective of brand credibility has been emphasised in consumer goods although there has been a sudden interest in service industries (Bougoure et al., 2016). It was then defined and conceptualised as a bi-dimensional construct model composed of source expertise and trustworthiness (Bigne-Alcaniz, Perez and Sanchez- Garcia, 2009).

3.12.1 Definitions of Brand Credibility

There are different dimensions to credibility, to name a few, cause-related credibility, source credibility and corporate credibility. The founder of this construct in marketing posits that brand credibility is defined as the believability of the product or service position information contained in a brand (Sweeney and Swait, 2004). Conversely, it is also defined as the believability in the characteristics of the product or brand information (Sheeraz, Iqbal and Ahmed, 2012).

Credibility in the context of cause-related marketing refers to the extent to which a consumer perceives that the brand expresses sincerity and goodwill and has the skill and necessary experience to associate with a given cause (Bigne-Alcaniz, Perez and Sanchez-Garcia, 2009).

Given that marketers deal with information savvy consumers who are able to evaluate a company through a simple Google search, marketers ought to be convincing that their cause-related marketing is believable rather than mere marketing gimmicks.

To add, corporate credibility is then defined as one that represents the degree to which consumers, investors and other stakeholders believe in the company's trustworthiness and expertise (Lafferty, 2007). Expertise and trustworthiness can arguably be increased by a long track record that a company maintains over years. In essence, trustworthiness and expertise are critical attributes of any type of credibility. This study's scope is solely confined to credibility of a brand (brand credibility).

Celebrity credibility is defined as the audience's perceptions of both celebrity expertise (how much the celebrity endorser knows about the product area) and trustworthiness (how sincere a celebrity is about product claims) (Erdogan and Drollinger, 2008). Celebrity credibility has two important facets - trustworthiness and expertise - like corporate and cause-related credibility. Both these traits are vital for celebrity endorsers to be deemed credible sources of information for brands by their target market. Most importantly, a celebrity endorser would be seen as credible in terms of expertise, trustworthiness and likeability or attractiveness, as well as having specific associations that carry potential product relevance (Keller et al., 2012).

A widely-accepted premise for online credibility posits that credibility is the extent to which users trust and believe online information (Johnson and Kaye, 2016). This means audiences or readers deem the source a reliable and expert information source.

On the other hand, brand credibility is perceived as the believability of the product position information embedded in a brand, depending on consumer perception of whether the brand has the ability and willingness to continuously deliver what has been promised (Erdem and Swait, 2004). Prior research also posits that credibility is the attitude of a receiver which references the degree to which a source is seen or viewed as believable (Imlawi, Gregg and Karimi, 2015). Also, credibility of a brand refers to the perceived trust in the capabilities and desire to continuously deliver what has been promised (Ameri and Behnam, 2014).

Credibility of a brand is defined as the perceived believability of whether a brand has the ability and willingness to continuously deliver what has been promised (Erdem and Swait,

2004). Simply put, this entails a brand's consistent commitment to maintain standards promised to clients. To add, credibility is the believability of an entity's intentions and manifests as trustworthiness and expertise (Erdem and Swait, 2004). The brand credibility construct was inspired by Erdem and Swait, who examined consumer-based brand equity by drawing on signalling theory (Baek, Kim and Yu, 2010).

Brand credibility may indicate a more tangible and utilitarian portion of perceived value and may be used by marketers to show a much bigger picture of the consumer decision process (Baek et al., 2010). Similarly, another stream of research describes credibility as a yardstick which evaluates the degree of the enthusiasm of the consumer toward the organisation to which the brand belongs (Ameri and Behnam, 2014). This therefore means that, for consumers, purchasing a credible brand assures a quality on which they can rely. Thus, firms use their credibility to signify quality in the minds of consumers.

It has been well-known that brand credibility consists of two main components: trustworthiness and expertise (Erdem and Swait, 2004). Trustworthiness refers to the willingness of firms to deliver what they have promised (Baek et al., 2010; Baek and King, 2011). Expertise refers to the ability of firms to actually deliver what they have promised (Baek et al., 2010; Baek and King, 2011). Based on the fact that trustworthiness and expertise of a brand are dependent on the cumulative impact of previous marketing strategies and brand actions, brand credibility reflects the consistency of marketing mix initiatives such as advertising (Baek and King, 2011).

3.12.2 Importance of Brand Credibility

Bachri et al. (2016) postulate that credibility is the key driver of company reputation, which refers to the consumers belief that the company can create and deliver products and services that satisfy their desires. As is known, one of the marketing purposes is to influence consumer perception and attitude toward the company. Therefore, companies must have high credibility. Creating and maintaining the company credibility can improve long-term business relationships, sales, financial performance and the company's success widely (Bachri, et al., 2016).

Ameri and Behnam (2014) put forward that the importance of credibility stems from the fact that incomplete expressions lead in the lack of the consumer's trust about the qualities of the

product, and this ends in the perceived risk of the consumer. In addition, brand credibility reduces the perceived risk because it increases the consumers' trust about the promises of a product of a company (Ameri and Behnam, 2014).

Credibility has been noted as a key role player in customer perceptions of the retailing environment, particularly in the context of pricing tactics, advertising, salesperson interactions and online catalogues (Sweeney and Swait, 2008). In other words, the credibility of a brand influences how it will retail in the market place, for instance, how well consumers receive advertising campaigns and promotions. Moreover, a credible brand is likely to maintain and gain loyal customers with or without sales promotions simply because consumers can trust and rely on it as a great brand. Jeng (2016) argues that credibility of a brand is established through consumers' past experiences with it either directly or indirectly. This therefore suggests that credibility is ascertained from the consumers' point of view. Furthermore, brand credibility is said to represents a summary of brand-to-consumer and consumer-to-brand communication over time and embraces the history of brand experience (Sweeney and Swait, 2008). As a result, brand credibility increases the consumer-expected utility of a brand and the probability of brand choice (Erdem and Swait, 2004).

Likewise, brand credibility is a key element in Keller's customer-based brand equity pyramid, representing one aspect of the consumer's response to the brand (cited in Sweeney and Swait, 2008). Brand credibility deals with perceived trustworthiness and the ability of the provider to deliver on promises concerning their services or brands. This therefore means that high credibility brands will have higher continuance commitment than lower credibility brand (Sweeny and Swait, 2008). Additionally, heightened perceptions of trustworthiness and expertise of a brand are hypothesised to make the exogenous factors militating in favour of a customer's permanence within the franchise loom larger than if credibility were low (Sweeney and Swait, 2008). A study found that heightened credibility leads to continuance commitment (Sweeney and Swait, 2008). The same reasoning can be adapted to the current study; South African consumers are most likely to committed to and prefer established credible imported wine brands over new wine brands.

Previous research demonstrated that understanding the combined mechanism of brand credibility and other branding constructs, such as brand prestige, in the formation of brand purchase intention will be very important and meaningful for advertisers and marketers, as it

provides guidance in developing brand positioning through the most appropriate advertising and branding strategies (Baek et al., 2010). Research on the signalling theory suggests that credibility is a key determinant of a brand signal for conveying information effectively, this implies that brands can serve as credible signals because they may embody the cumulative efforts of prior marketing communication strategies (Baek et al., 2010). That is, at the heart of brands as signals, is brand credibility.

Despite the dearth of studies investigating the importance of credibility in the service industry, there is evidence that suggests its importance, particularly in the airline industry. Essentially, understanding how credibility influences or affects purchase intentions can aid airline companies in executing marketing decisions (Jeng, 2016). Brand credibility plays a key role in the purchase decision of a service given that services are often intangible, there may be a high level of uncertainty and thus consumers cannot readily evaluate a service before a purchase (Jeng, 2016). In this regard, for consumers purchasing services from a credible airline brand assures quality, punctuality of flights, safety of baggage handling, safety and reliability (Jeng, 2016).

3.12.3 Signalling Theory and Brand Credibility

Brand credibility is underpinned by the signalling theory which illustrates that the asymmetric information existing between companies and consumers who fail to distinguish between market offerings, signals such as brands enable marketers to simplify information searching by providing information like country of origin and expected price range (Bougoure et al., 2016). International wine marketers may use country of origin as a brand signal to differentiate their champagne and sparkling wine from the local producers. In addition, the signalling theory advocates that companies should inform and educate consumers of what they are promising with brands (Dopico, Blázquez and Tudoran, 2009). Champagne from the Bordeaux region in France is perceived as superior quality, given its established credibility. Ideally, credible brands serve as a source of knowledge to consumers (Peng, 2016). Such information aids consumers in making informed choices and enables marketers to distinguish themselves from competitors (Bougoure et al., 2016).

In addition, brand credibility is a signalling tool that heightens consumer decision convenience, which consequently increases purchase intention (Jeng, 2016). Furthermore, the

signalling theory suggests that brands serve as credible signals as they embody the collective marketing strategies (Baek and King, 2011; Ping, 2016).

3.12.4 Merits of Brand Credibility

Research demonstrates that there are numerous benefits of brand credibility, both to the consumer and marketing practitioners. There is evidence that the credibility of a brand provides unbeatable benefits to both consumers and companies (Baek et al., 2010). Choiu et al. (2013) affirm that credible sources are believed to be more trustworthy and persuasive. Other scholars also assert that credibility of a brand conveys information that consumers perceive as truthful and reliable and is achieved when a consumer interprets historical experiences with marketing strategies and forms a judgement about the brand (Bougoure et al., 2016). Consumers trust and rely on what they regard as credible sources to make their judgements about brands and services. Moreover, consumers are persuaded positively by credible brands, that is to say, consumers are likely to purchase services or products from credible firms.

Additionally, credibility of brands determines brand evaluations and attitudes (Choiu et al., 2013). Credible brands usually draw positive brand evaluations and favourable attitudes. Similarly, another study also revealed that brand credibility leads to positive attitudes towards a brand (Malik and Ahmad, 2014). Individuals become more certain of their attitudes after resisting persuasion of highly credible sources (Chiou et al., 2013). For instance, when a consumer gets exposed to negative online information from a credible source, they display more negative change in brand evaluation and perceived brand risk than when exposed to negative online information from a less credible source (Choiu et al., 2013). Also, another study found that enhanced credibility perceptions lead to a favourable attitude towards the sponsor in a sponsorship context (Rifon, Choi, Trimble and Li, 2013). On the contrary, messages from low expertise sources typically produce no change in attitude (Chiou et al., 2013). It therefore emphasises the need to build and maintain brand credibility in order to influence attitudes which is the ultimate goal of every firm.

For companies, a credible brand means that marketing efforts will be more cost effective because of the heightened likelihood of message acceptance, thus bringing companies increased sales through repeat customers and referrals (Baek et al., 2010; Jeng, 2016). Based on literature, advertising may not necessarily increase brand credibility in isolation, but rather

through added expectations that consumers will finally confirm when they purchase and use products (Baker et al., 2010). In addition, brand credibility decreases information costs (Baek and King, 2011). Information costs may entail press conferences and exorbitant advertising budgets. A well established and credible brand would spend far less on marketing strategies, thus the brand promotes itself.

Brand credibility is one mechanism through which brands can impact consumer choice (Kemp and Bui, 2011; Ederm and Swait, 2004; Jeng, 2016). To add, brand credibility as a signal of product positioning may be the most fundamental of all brand characteristics to influence consumer choice (Bougoure et al., 2016). In today's society, consumers are confronted by complex challenges such as product clutter; credible and established brands are most likely to be considered by consumers faced with a choice problem. Similarly, research has demonstrated that firms use brands as signals to convey information about quality to consumers, as such the credibility signalled by brands is fundamental because it decreases consumer uncertainty and economises decision making cost (Akdeniz, Calantone and Voorhees, 2013). It is therefore in a marketer's interest to build credibility around their brand to succeed in this competitive market place.

Prior literature also posits that brand credibility increases perceived quality, decreases consumer risk perceptions and information search and increases consumer expected utility (Bougoure et al., 2016). Also, credible brands enjoy lower information gathering and information processing costs and lower perceived uncertainty (Erdem and Swait, 2004). Moreover, brand credibility relates to a number of behavioural outcomes which are crucial for customer relationship management (Sweeney and Swait, 2008). In actual fact, a brand can serve an important role in defensive marketing actions because it functions as a signal to consumers, credibility is an important feature of this signal (Sweeney and Swait, 2008). This brand signal usually pertains to quality. Moreover, these brand signals may reduce the uncertainty that consumers are confronted with in cases where quality is not observable (Jeng, 2016). This therefore implies that a brand's credibility assures consumers of certain standards and also helps when consumers are faced with purchase decision challenges.

Equally important, brand credibility was found to reduce switching behaviours among customers (Sweeney and Swait, 2008). This means that credible brands are likely to retain and maintain loyal customers for longer periods. Customer retention is beneficial for any

business success, mainly because it guarantees repeat purchases. Additionally, given the potential utility of brands as signals, brand credibility may influence consumer's purchase intention because they can enable consumers to increase their confidence in brand selection (Baker et al., 2010). Customers are more inclined to purchase and repurchase from reliable and credible brands than from unknown brands.

Credible brands minimise risk and increase consumer confidence (Kemp and Bui, 2011). When consumers have confidence in a brand, they are likely to commit to using and repurchasing the brand. Research has found that high credibility brands will have higher continuance commitment than lower credibility brands (Sweeney and Swait, 2008). It therefore means brand credibility leads to increase in loyalty commitment towards a brand.

In addition, past research illustrated that the credibility of the source has significant impact on the recipients of the message (Zakaria and Mustaffa, 2014). By the same token, another study found that for airline companies, a credible brand means that marketing efforts will decrease because of the high likelihood of message acceptance, thus bringing companies increased sales (Jeng, 2016). Consumers are most likely to be recipients and believe most claims made by long established credible brands.

Last but not least, brand credibility is a greater contributor to satisfaction. Researchers argue that if customers believe that the firm is performing well and delivering its promises, this ultimately boosts satisfaction (Sweeney and Swait, 2008). Customer satisfaction is a great outcome for businesses because it can almost guarantee repeat purchases and customer loyalty. Also, satisfied customers are likely to recruit and be brand ambassadors, especially in brand tribes, thus increasing the customer base. Thus, researchers propose that brand credibility's sub-components; expertise and trustworthiness, are drivers of overall satisfaction (Sweeney and Swait, 2008). It is noteworthy to say, brand credibility is a long term summary of the customer's interaction with the provider in terms of brand stability, and thus explains long term, summative and the more general concept of satisfaction (Sweeney and Swait, 2008).

3.12.5 Conceptualisation of brand credibility

Prior literature had proposed three elements of brand credibility, namely, expertise, trustworthiness and attractiveness (Sheeraz, Iqbal and Ahmed, 2012; Wang and Yang, 2010;

Keller, 2008). Nevertheless, literature demonstrates that there are a number of ways in which researchers have measure the brand credibility construct.

Brand credibility is arguably a latent multi-dimensional construct (Jeng, 2016). This section discusses the similarities and dissimilarities of the conceptualisation of brand credibility. Subsequently, the relevant conceptualisation of this study is presented.

Furthermore, source credibility is conceptualised as a two-dimensional construct that encompasses trustworthiness and expertise (Trimble and Rifon, 2006). Trustworthiness is the degree of confidence in the communicator's intent to communicate assertions that are considered most valid (Erdem and Swait, 2004). Essentially, the basic premise for the dimension of credibility places emphasis on the reliability of a source. It is argued that positive characteristics of messages can enhance the value of the source and thereby increase acceptance amongst readers (Lu, Chang and Chang, 2014). This is perhaps based on the notion that suggests that the information source can influence credibility impressions, especially in an online setting (Lin, Spence and Lachlan, 2016). Moreover, if receivers feel that the message has bias, they may downgrade the credibility of the source and be unresponsive to the message (Lu et al., 2014), whereas, expertise is defined as the extent to which a communicator is perceived to be a source of valuable assertions (Erdem and Swait, 2004). Simply put, one is regarded as an expert source based on their knowledge and authority on the subject or area.

Conversely, other researchers posit that source credibility can be measured using three dimensions; expertise, trustworthiness and attractiveness (Erdem and Swait, 2004). Trustworthiness was conceptualised to refer to what extent a brand is considered a reliable source of information (Malik and Ahmad, 2014). Furthermore, expertise is the extent to which a specific brand has good knowledge and skills, while attractiveness refers to what extent a brand is evaluated in terms of personality determinants, such as behaviour and ambition (Malik and Ahmad, 2014).

On the other hand, credibility is measured as a multi-dimensional construct that encompasses believability, fairness and accuracy (Johnson and Kaye, 2016). These three measures have been consistently measured as reliable variables that gauge media credibility (Johnson and Kaye, 2016). Credibility is often perceived as the most influential feature of any news medium (Johnson and Kaye, 2016). In an online context, for instance, research posits that

individuals use agents, such as number of followers and the speed of updates on Twitter to evaluate credibility of a source (Lin, Spence and Lachlan, 2016). Against this backdrop it is interesting to note that individuals place credibility of a source on its accuracy.

In addition, source credibility has been typically categorised to comprise three dimensions that include trustworthiness which is the degree to which a perceiver believes a sender would tell the truth, goodwill is the degree to which a perceiver believes a sender has his or her interests at heart and expertise or competence is the extent to which the perceiver believes a sender is knowledgeable (Lin, Spence and Lachlan, 2016). Given the aforementioned conceptualisation of brand credibility, this study adopts the three dimensional approach to conceptualising brand credibility due to its holistic nature. It incorporates attractiveness (personality of the brand) which is a fundamental attribute that consumers consider when deciding whether or not a brand is credible in conjunction with trustworthiness and expertise. Thus, trustworthiness, expertise and attractiveness demonstrate a complete picture of brand credibility (Sheeraz, Iqbal and Ahmed, 2012).

Besides, other streams of research point out that credibility is formed by several sub-variables or dimensions as proposed by previous researchers, namely reliability, expertise/competence, attractiveness, power, trust, likability, and relevance (Bachri et al., 2016).

3.12.6 Antecedents of Brand Credibility

In the context of cause-related marketing, cause-brand fit significantly influences brand credibility. Existing research has shown that brand altruistic motivations can generate greater credibility, because there is significant congruence between what a brand is transmitting (social commitment) and the motives that lead to the behaviours (Bigné- Alcañiz, Currás-Pérez and Sánchez- García, 2009). To add, greater brand fit prevents the formulation of judgements and can be used to evaluate brand cause sincerity and honesty (Bigné- Alcañiz et al., 2009).

Altruistic motivations have been found to moderate the antecedents of brand credibility and generate more brand credibility. This is closely related to brand-cause fit. Both advocate for believability as the prerequisite of credibility. Consumer attribution of brand altruistic motivations or values requires perception of a similarity between what the intended brand message is and its true motives; this prevents manipulation and deceit (Bigné- Alcañiz et al.,

2009). The basic premise of altruistic attribution is that it is used as an indicator which aids consumers to evaluate sincerity and honesty of a company's social commitment and credibility (Bigné- Alcañiz et al., 2009). Similarly, in a blogging context, sponsors must be declared beforehand as this can influence information and the consumer beliefs about the credibility of the source of information (Lu et al., 2014). That is to say, consumers evaluate brands that withhold altruistic motivation and view them as credible. In a wine consumption context, wine consumers are usually affluent, information savvy and well educated individuals and green marketing initiatives, for example, would need to be very clear in order to be believable in their minds.

In addition, consistency is arguably a predictor of brand credibility. Consistency signifies the degree of harmony and convergence among the marketing actions and the stability of marketing strategies over time (Ederm, Swait and Valenzuela, 2006). In this case, firms that are consistent with delivering the same quality of brands and services rank high in terms of credibility. Ederm and Swait (2004) posit that brand investments represent a firm's spending on brands in order to demonstrate long term brand commitment and to ensure consumers that brand promises will be kept. One can argue that these investments can be recovered directly when a brand becomes credible and established.

In addition, clarity is another antecedent of brand credibility. Essentially, clarity in this context, refers to the lack of ambiguity of product or brand information (Ederm et al., 2006). Against this backdrop, brand credibility can be created and maintained by higher consistency, higher brand investments and higher clarity over time through holistic marketing communications initiatives such as advertising, sponsorship and sales promotions (Baek and King, 2011). Therefore, brand credibility can be created by increased consistency, clarity and brand investment over time through marketing communications such as, brand image advertising, sponsorship and sales promotions (Jeng, 2016).

3.12.7 Related Studies on Brand Credibility

Credibility has been studied in a number of industries, namely, services, restaurants, fast moving consumer goods and disaster management studies. Prior empirical studies established that source credibility is also a fundamental aspect in disaster management, mainly because people need to learn to evaluate information received by listening, understanding, trusting, verifying and responding to warning messages (Zakaria and Mustaffa, 2014). In this context,

people tend to rely on credible sources of information, such as, trusted experts and news stations. Experts, such as, public relations practitioners and spin doctors play a vital role in shaping and creating credibility for an organisation, in a case where a company or firm has had negative publicity. A press conference may be an ideal platform to re-enforce credibility to the target consumers. In addition, authority cues aid in the evaluation of source credibility especially in risk and health issues (Lin et al., 2016). Prior research reported that individuals are more influenced by a medical expert or official authority for health related matters (Lin et al., 2016). Hence, credibility has to be believable, given that firms are dealing with active producers of news as opposed to the passive receivers of the past.

In addition, previous literature also investigated a different dimension to credibility. Existing consumer research also focused on the relationship between source credibility and persuasion outcomes (Chiou et al., 2012). Furthermore, the elaboration likelihood framework suggests that high involvement individuals follow a central processing route to persuasion in which attitudinal changes are determined by a person's careful consideration of information about the true merits of the brand (Chiou et al., 2012). Contrary to this, for low involvement brands, consumers assume that experts are correct and thus credible; online sources ultimately have a significant influence on how information is received with both low and high involvement elaboration conditions (Chiou et al., 2012).

3.13 History of Purchase Intention

An individual's decision to purchase a product is usually an ordinary task, however the decision becomes complex when aspects of representation, visibility and the perceptions of others is taken into consideration (Salmon, 2008). Traditionally, the term 'intention' refers to the antecedents that stimulate and drive consumers to purchase services and products (Howkins and Mothersbaugh, 2010). In addition, purchase intention has been used in other fields such as journalism, like forecasts preceding actual purchase (Rizwan, Qayyum, Qadeer and Javed, 2014).

The theory of reasoned action and the theory of planned behaviour proved that consumer attitudes will directly affect their behavioural intention which also affects their purchase intention (Lui et al., 2014). In most cases, consumer purchase intention is determined by a number of factors such as word-of-mouth, marketing campaigns and previous brand experience. Based on TFQM, in the purchase process stage, consumers assess a product's

expected quality based on product cues that can be inspected at the time of the purchase (Mueller, Osidacz, Francis and Lockshin, 2010).

3.14 Definitions of Purchase Intentions/Behaviour

Purchase intention is described as a consumer's conscious plan or intention to purchase a product (Spears and Singh, 2004). In addition, purchase intention is the consumer's willingness to buy a given product at a specific time or situation (Liu, Chang and Chang, 2014). The abovementioned definitions of purchase intentions illustrate that a consumer's intention to purchase include their choice and willingness to engage in purchase activity.

Furthermore, other scholars define purchase intention as a fundamental aspect of consumer behaviour in which a customer is agreeable to make a transaction with retailer (Rizwan, Qayyum, Qadeer and Javed, 2014) whereas, other studies argue that purchase intention refers to the probability that a customer in a situation of purchase choice, selects the specific brand from a product category (Crosno, Freling, and Skinner, 2009).

On the other hand, purchase intention is a measure of readiness to buy a product (Rizwan et al., 2014). To add, scholars also view it as the probability that a consumer will buy services or a product (Rizwan et al., 2014). Another stream of research defined purchase intention as a consumer's intention to buy a specific brand which the consumer has selected after certain evaluation (Khan, Ghauri and Majeed, 2012). In addition, purchase intention indicates that consumers will follow their experience, preference and external environment to collect information, evaluate alternatives, and make purchase decisions (Chi, Yeh, and Tsai, 2011).

Furthermore, an empirical study demonstrated a strong correlation between two constructs: purchase intention and purchase behaviour. This, therefore, infers or implies that purchase intention serves as a substitute for measuring consumer purchase behaviour (Kim and Pysarchik, 2000). Consequently, purchase intention serves as an alternative for measuring consumers actual behaviour, this is supported by previous theories that suggested that intention is the factor that motivates consumers and in turn, influences their behaviour (Haque et al., 2015). That is to say, consumers are willing to try out products or brands prior to executing an actual behaviour. Simply put, purchase intention and purchase activity are related constructs, in actual fact, purchase intention is a predictor of actual purchase behaviour.

3.15 Importance of Purchase Intentions to Marketing Managers

This section presents a discussion of why purchase intention is relevant and important for marketing practitioners. Marketers have predominately sought to gain understanding consumer actual behaviour through studying intentions (Haque et al., 2015). First and foremost, studying consumer intentions provide insights about existing customer behaviour such as which brands sell fast and which ones require sales promotions. Moreover, firms need to understand the factors that affect consumer behaviour not only to retain existing consumers but also to attract new consumers and to gain competitive advantage in the marketplace (Gunay and Baker, 2011).

This therefore, confirms why consumers' intention towards a behaviour remains a crucial focus to well-known theories such as the theory of reasoned action (TRA) (Haque et al., 2015). In addition, this is supported by the theory of planned behaviour that advocates that intention is the factor that motivates consumers and in turn, influences their behaviour (Haque et al., 2015). This therefore, suggests that when intentions of performing a certain behaviour are so strong, there are greater chances that the behaviour will be performed (Haque et al., 2015).

Studies reveal that purchase intention may classify as one of the mechanism of customer cognitive behaviour on how an individual intends to purchase a particular brand or service (Rizwan, Qayyum, Qadeer, and Javed, 2014).

In addition, purchase intention is a critical measure to firms because it predicts current consumer behaviour and also measure subsequent purchases (Mowitz, Steckel and Gupta, 2007). This is beneficial for marketers in that they gain insights into how to improve the satisfaction of the consumers which improves purchases behaviour and ultimately, their business performance. Gunay and Baker (2011) put forward that by so doing, firms increase the likelihood of being market leaders.

3.16 Conceptualisation of Purchase Intention

Purchase intention is usually related to the behaviour, attitudes of consumers and perceptions (Mirabi, Akbariyeh and Tahmasebifard, 2015). The theory of planned behaviour (TPB) and theory of reasoned action (TRA) illustrate that consumer attitudes directly affect behavioural intention (Lu et al., 2014). The theory of planned behaviour essentially argues that attitude

toward buying and subjective norm are the antecedents of performed behaviour (Chinomona et al., 2013). This is to say, that when a consumer has or holds positive attitudes towards a brand they are likely to engage in a positive behaviour.

3.17 Antecedents of Purchase Intention

There are a number of factors that influence or predict consumers' intentions to purchase any service or product. This section provides a holistic perspective of the factors that lead to purchase intentions and are not necessarily limited to wine. Demographic factors affect consumer behaviour significantly. These demographic needs include age, marital status, gender, income, education and occupation. Needs and preferences change rapidly as consumers go through different stages of their lives (Ganey and Baker, 2011). Several scholars have concurred that the influences of age is fundamental in consumer behavior, especially given the notion that certain age groups have certain consumption patterns or preferences (Kotler and Kotler, 2012; Ganey and Baker, 2011).

3.17.1 Consumer Feelings

In general, consumer's feelings and impulsive situations may determine their purchase intention (Malik et al., 2013). In fact, these consumer feelings entail personal liking and impulsive situations and they vary from one consumer to the next (Malik et al., 2013).

3.17.2 Brand Awareness

Brand awareness is an antecedent of purchase intention. Literature has suggested that whenever a customer is willing to buy a good or service, the first brand name that comes to mind suggests that this product has high brand awareness (Malik et al., 2013). This brand awareness comprises brand recognition and brand recall (Lu, Chang and Chang, 2014). Brand recall refers to a consumer's ability to recall a brand name when given a product category whereas brand recognition entails a consumer's ability to identify a brand when given the brand name as a clue (Lu et al., 2014). Scholars argue that brand awareness plays a noteworthy role while purchasing a product that may have control on perceived risk evaluation of consumers and their level of assurance about the buying decision due to awareness of the brand (Malik et al, 2013).

Also, brand awareness is believed to be a critical factor in the purchase intention and a certain brand will accumulate in consumers' mind to influence consumer purchase decision (Chi, Yeh, Chien and Yang, 2009; Lu et al., 2014). In essence, a product with higher brand awareness will receive higher consumer preferences due to it having higher market share and quality perceptions (Chi et al., 2009). Moreover, another study found that when brand awareness of bloggers is high, consumers will in turn, have positive attitudes towards the sponsored recommendation posted on a blog (Lu et al., 2014). Based on the evidence above, it is clear that brand awareness plays a critical role in determining attitudes and ultimately, purchase behaviour in various settings.

3.17.3 Loyalty

In addition, brand loyalty is also regarded as a predictor of purchase intention. Brand loyalty can be defined as the degree of closeness of the client to a specific brand, which is expressed by repeat purchases regardless of marketing stress created by rival brands (Malik et al., 2013). Customers can become loyal to a brand due to its taste, quality, and uniqueness and feel easy using it and when they are knowledgeable about it and ultimately, make a purchase.

3.17.4 Product Quality

Consumers' evaluation of quality has been considered an attitudinal judgement, based on which, consumers evaluate the extent to which the brand fulfils their expectations (Haque et al., 2015). Studies reveal that product quality is a key predictor in assessing purchase intention and it involves a continuous process of improvement that increases product performance and satisfaction of customer needs (Mirabi et al., 2015). In essence, quality represents the functional value of a product which ultimately influences consumers in making their choices (Haque et al., 2015). Furthermore, studies have revealed that if a product is high quality, customers are more inclined to purchase it (Mirabi et al., 2015; Tariq et al., 2013). Similarly, Jalivand et al. (2011) investigated the effect of product quality on purchase intention and they established that product quality has a significant impact on consumer purchase intention.

3.17.5 Price

Price has been found to influence purchase intention for various product categories and services. Kotler and Armstrong (2010) define price as the money that customers exchange in terms of service or product or the value they receive. Subsequently, research findings have illustrated that marketers use product price as an antecedent that influences consumer's evaluations of products and purchase intention (Chang and Albert, 2010). More often than not, consumers of luxury or hedonic products associate a higher premium with quality. On the other hand, consumers of basic or utilitarian products would be more attracted to purchase reasonably priced products. In addition, there are several debates on how prices affect the purchase intention of wine amongst generation Y. Generation Y are said use price in the absence of wine knowledge as a reliable cue for quality (Barber, Ismail and Dodd, 2007).

3.17.6 Brand Image

Research indicates that brand image is also an antecedent for consumer purchase intention. A previous research paper investigated relationships between awarded mutual investments' brand image, perceived quality, perceived risk, perceived value, and purchase intention. The study demonstrated that brand image certainly increases investors' purchase intention. They recommend that fund managers should devote efforts to elevating and maintaining their brand images via advertising and marketing funds that have received awards (Wang and Tsai, 2014). In addition, it is recommended that once a positive image is established, fund companies may utilise the added values to promote their other funds that have not yet won an award.

3.18 Purchase Intention and International brands

First and foremost, it is fundamental to conduct research in the context of different countries as consumers are unique in their spending preferences (Haque et al., 2015). The dynamic of the change in behavioural patterns is due to the availability of several brand choices, both domestic and global brands. Studies have been conducted internationally with the goal to establish what leads consumers to purchase foreign or imported brands (Haque, Rahman and Haque, 2011; Haque, Anwar, Yasim, Sarwar, Ibrahim and Momen, 2015). Studies have proven that when the business consumer perception on the country of origin, familiarity and

world mindedness is positive, this ultimately improves consumer belief in making a purchase decision (Suryaningsih, Hadiwidjojo, Rohman and Sumiati, 2014).

Studies reveal animosity establishes that consumers avoid products and brands from specific countries not because of quality, but rather because of animosity towards to country of origin (Cheah, Phau, Kea and Huang, 2016). Consumers may hold animosity attitudes towards a specific country's products mainly because of terrorism, political instability, religious and cultural intolerances in that specific country. Findings suggest that animosity toward a foreign nation influences choices between foreign goods while consumer ethnocentrism is related to choices between domestic and foreign goods (Cheah et al., 2016).

3.18.1 Country of Origin (COO)

Several empirical studies have investigated country of origin and have made it an essential tool and a phenomenon in international marketing and consumer behaviour (Tigli, Pirtini and Erdem, 2010: Haque et al., 2015; Bruwer and Buller, 2012). Country of origin or region of origin is very common in wine research. The basic premise for country of origin states that consumers hold perceptions about brands based on where the brand originates from. In essence, country of origin helps understand behavioural intentions, specifically preferences and purchase of imported or foreign brands (Kim and Pysarchik, 2000). To add, it has been established that when consumers hold favourable perceptions about a brand's country of origin, this enhances brand image and thus positively affects purchase intentions (Haque et al., 2015). For instance, in the Japanese wine market, France, Italy, US, Chile, Australia and other country-of-origins (COO) are all viewed as brands of wine (Bruwer and Buller, 2012).

3.18.2 Culture

In addition, culture plays an important role in the purchase decisions for international products. The individualism-collectivism dimension describes the relationship between and the groups to which the individual belongs or within which the individual belongs or within which the individual is embedded (Liu et al., 2011). Individualistic consumers are more open to the global world's offerings such as international products. However, ethnocentric consumers tend to prefer proudly local products.

3.19 Purchase Intention and Wine

Examining purchasing intention for wine in relation to other alcoholic beverages becomes important for the wine industry, both local and international, which shows potential for further growth, as is the case of the United States, and mature markets, as is the case of Mediterranean countries, where the consumption of wine has declined compared to other beverages (Marinelli, Fabbrizzi, Sottini, Sacchelli, Bernetti and Menghini, 2014). Therefore, marketing specialists and wine producers require a clear strategy which is based on complete understanding of the reasons that encourage consumers to purchase a brand (Mirabi et al., 2015).

Like any other hedonic product, there are several factors that affect or trigger the purchase intention of wine. For wine, these are mainly extrinsic product cues, such as brand, region of origin, and packaging design, while intrinsic sensory characteristics are almost always experienced only during consumption (Mueller and Szolnoki, 2010). In addition, perceived costs and expected quality are the main suggested drivers of the intention to buy (Mueller and Szolnoki 2010). When considering the purchase of certain products, it is generally accepted that consumers incorporate social issues into their purchasing practices by evaluating the consequences of their consumption (Barber and Taylor, 2013). The loyalty intention symbolises the customers' dedication to a particular brand and their enthusiasm to have long-term relationships with that brand. Thus, the best strategy to deal with complaint and switching behaviour is to reassure customers (Soars, 2009).

Furthermore, wine purchase intention motivations are dissimilar from other product categories and services. First, the unique and highly complex nature of wine as a product category shows markedly different choice processes for wine compared to other fast moving consumer goods in literature (Hollebeek, Jaeger, Brodie and Balemi, 2007). Second, wine is recognised as a lifestyle beverage and the wine consumer's relationship is based on an acquired, not an innate need, as in the cases of food and shelter (Bruwer and Alant, 2009). Moreover, an increasing number of product varieties and brands of domestic and foreign wine, as well the increased diversity in wine styles and prices makes identification of purchase drivers a complex task (Cordus, Cinquanta and Levoli, 2013). Besides, consumers are confronted with wine selection uncertainty mainly because of the wide range of wines available in retail outlets, restaurants and at online stores. Furthermore, wine consumption

itself can be regarded as a hedonic experience, a sensual and pleasurable activity aimed at personal enjoyment (Bruwer and Alant, 2009).

Additionally, international wine firms' success would greatly depend on how well they understand other macro environment motivations that drive wine purchase intentions. According to Foxcroft (2009), there are many factors impacting the consumption of wine and often the unique combination of these, instead of the individual factor, plays the biggest role. The major factors influencing wine consumption were found to be;

First, political and government policies, this essentially means that the liquor industry is shaped by legislation through the controlling of manufacturing, supply, and distribution of wine. Licencing of wine products and premises authorised to sell wine will influence the accessibility of it. Furthermore, countries regulate exports and imports by imposing taxes and duties which influence prices and in turn, also the volumes sold. In extreme cases, some countries ban any alcoholic beverages in their entirety, demonstrated by the world of Islam as well as the prohibition in the USA between 1920 and 1933 (Foxcroft, 2009). Another example includes how legislation determines alcohol content of wines in every country, ultimately impacting consumer behaviour (Oppernam, 2010). This therefore, means that countries with tight or stringent legislation are likely to have lower wine consumption and are therefore not financially viable for liquor imports.

Second, economic factors, the level of real GDP has been indicated to have a substantial influence on the consumption of wine or any alcoholic beverage, for that matter. In addition, good economic policy generating wealth within a society benefits not only wine producers, but also marketers. Furthermore, an Australian study indicates that expenditure elasticity for wine is greater than unity which implies that as total expenditure on alcohol rises which can be expected when income grows, the consumption of wine will also rise (Foxcroft, 2009). It is therefore beneficial for wine marketers to analyse and relentlessly conduct market research on the financial or economic performance of the existing and potential customer. A case in point, Greece is currently going through an economic melt-down therefore, consumption and purchase of luxury brands and products is likely on the decline.

In addition, studies have demonstrated that marketing elements influence consumption trends all the time (Foxcroft, 2009). These marketing elements vary from and are not entirely limited to point of sales promotions, broadcast and outdoor commercials. This has led to an

industry of advertisers and merchandisers. One way of marketing products and brands to consumer is through wine labelling. Adequate and attractive wine labelling has been proven to have also impacted consumer purchasing behaviour as well as word-of-mouth marketing (Opperman, 2010).

Finally, social factors and their status influences wine consumption in different countries. Gunay and Baker (2011) also concurred with previous claims that the socio-economic and demographic consumer traits influence consumer preferences and wine consumption. These include the number of people of wine-drinking age; number of people at different ages (for example, younger French people drink less than the older people); social status; unemployment rate and consumer household role structures. The Chinese people are also known to be status oriented and it is displayed through their consumption of expensive alcoholic drinks at family gatherings (Ngamkroeckjoti et al., 2011).

3.20 Chapter Summary

Chapter three set out to provide a review of three theories commonly used in the fields of social science (psychology) and consumer behaviour. Specifically, it focused on the following theories; consumer culture, social identity and aspiration choice based, and how these theories were coined in academia. Thereafter, a motivation of how these theories are related to the current study is discussed. In addition, another section focused on the branding constructs: brand tribalism, brand love, brand credibility, brand preference and purchase intention. First, these constructs are defined, then conceptualised, then antecedents and the importance of each variable is then discussed. Last and least, a discussion on the antecedents of imported brands is presented. The subsequent chapter (chapter four) presents the existing literature, theoretical gaps are identified from which a conceptual model is developed for the present study.

CHAPTER 4: PROPOSED CONCEPTUAL MODEL AND HYPOTHESIS DEVELOPMENT

4.1 Introduction

The purpose of this chapter is to present a conceptual model for imported (international) wine marketers in South Africa. The review of literature on Consumer culture theory by Arnould and Thompson (2005), social identity theory by Tajfel (1972), brand relationships by Fournier (1998) and empirical literature on five research constructs; brand tribalism, brand love, brand preference, brand credibility and purchase intention will guide this study's conceptual model creation. Both theoretical and empirical studies were used to explain existing associations between the proposed relationships.

4.2 Proposed Conceptual Model

After a thorough review of the literature, a conceptual model was drawn for the study. First, brand tribalism represents the predictor variable with purchase intention as the outcome variable. There are three mediating variables, namely brand love, brand credibility and brand preference. In essence, the purpose of this study is to investigate the relationships between brand tribalism and purchase intention and the mediating role of the three abovementioned variables. It is therefore proposed that brand tribalism has a positive influence on brand love, brand credibility and brand preference which consequentially has a positive influence on purchase intention. In practice, this means that when wine marketers and retailers manage to create and manage brand tribes, it will have a positive influence on consumer's brand love, brand credibility, brand preferences. Ultimately, this will lead to increased consumer purchase intention. The proposed conceptual model is presented in Figure 4.1.

Figure 4.1: Proposed Conceptual Model

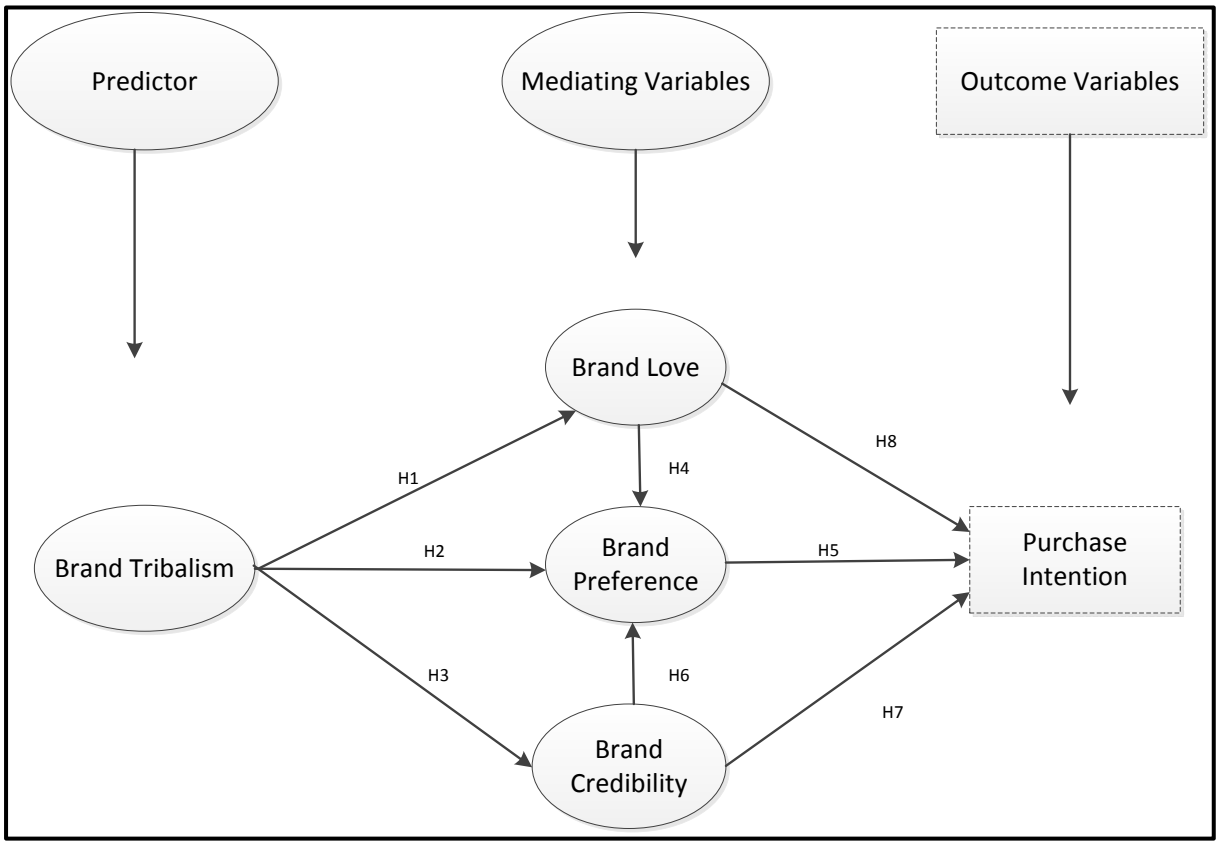

Source: Developed by researcher (2015).

Figure 4.1 depicts the proposed conceptual model for the study. Specifically, it shows the predictors of consumer purchase intention towards imported wines among Generation Y consumers in South Africa. The arrows represent the proposed relationships between the variables denoted as H1-H8. After a critical examination of existing theoretical and empirical literature on the study's constructs, the succeeding section presents the hypothesis development per proposed relationship.

4.3 Brand Tribalism and Brand Love (Hypothesis 1)

There is limited research on the brand tribalism and brand love relationship in the extant literature. Perhaps this could be due to the fact that these constructs seem to be relatively new in the marketing literature (Drennan et al., 2015). Several scholars argue that brand tribalism and brand are similar constructs (Cova and Pace, 2006; Haymeed et al., 2015; Badrinarayanan, Sierra and Taute, 2014). Following this assertion these terms will be used interchangeably in this research.

Given the limited literature so far, on brand tribalism and brand love constructs have been found to have a positive influence on consumer behaviour. Most importantly, literature suggests that both brand tribalism and brand love are constructs that distinguish various consumer emotions. In addition to that, Batra et al. (2012) assert that consumer brand relationships research is multi-disciplinary, multi-dimensional and multi-conceptual. Buttressing the same notion, the extant literature has postulated that brand tribalism is an important predictor of the strength of brand relationships (Lourerio, 2016). This is in line with previous findings that suggest that brand tribalism is positively related to the consumer brand relationship which can explain consumers' thoughts and feelings about the brand (Esmaeilpour, 2015). One can argue that these positive thoughts and feelings could potentially be love and attachment towards the brand. This therefore, means that brand relationships formed in brand tribes lead to brand love. Brand tribalism is often used interchangeably with a concept referred to as brand communities, whereas brand love is often related to brand attachment in literature (Bergkivist and Bech-Lasen, 2010; Carroll and Ahuvia, 2006).

Veloutsou and Moutinho (2009) posit that brand tribalism is a better predictor of the strength of brand relationships than the long-term brand reputation itself. These brand relationships consist of brand satisfaction, brand attachment, brand trust and brand love (Veloutsou and Moutinho, 2009). Subsequently, Jurisic and Azevedo (2011) also provide corresponding evidence that brand tribalism is a community or subculture of consumers formed through an emotional bond to a product. This indicates that brand tribalism facilitates emotional bonds with the brand, this emotional bond is an antecedent of brand love. Hence, brand tribalism leads to brand love.

It can also be noted from the existing empirical literature that brand love research has been hindered by a lack of exploratory studies that guide subsequent measurement and theory development (Batra et al., 2012). Perhaps, this might explain the controversies surrounding the assumed equivalence of brand love and interpersonal love and the perception of brand love as an emotion rather than a relationship (Batra et al., 2012). Interestingly, two independent studies have demonstrated that brand tribalism is one of the processes for creating a society through the consumption of a brand which is key to creating brand loyalty and brand equity (Tsiotsou, 2013; Taute and Seira, 2014).

Studies have proven that love towards an object is fundamental to the creation of consumer identity (Carroll and Ahuvia, 2006). This therefore, means that a consumer is more likely to love a brand that he or she feels strongly identified with in their respective brand communities/tribe. Thus, one can assume that brand tribe identification can possibly be considered to be an antecedent of brand love (Rodriguez and Reis, 2013). Likewise, research also illustrated that brand love has beneficial implications such as active participation in brand communities which are synonymously referred to as brand tribes in marketing (Ahuvia and Carroll, 2006; Bergkivist and Bech-Lasen, 2010). This therefore may mean that active tribal members ultimately develop brand love.

Bagozzi and Dholakia (2006) argue that brand communities are composed of consumers whose enthusiasm for the brand reveals a well-developed social identity that expresses their shared sentiments and drives participation toward collective goals. In addition, research has demonstrated that these specialised subcultures (groups of people sharing passion towards a specific brand) enable marketing managers to communicate better, establish and strengthen consumer relationships (Hung, 2014). Such members of communities/tribes also express their attachment towards brands with which they identify which arguably is referred to as brand love. Zhou et al. (2012) found that brand attachment (which is synonymous to brand love) fully mediates between brand community commitment and brand commitment, although they did not explore community identification and brand attachment. This link is fundamental to explore given that brand commitment is one of the predictors of brand love.

In addition, concepts within the brand self-congruence and authentic self-expression literature examine how brand attachment and brand community identification are central to consumer-brand and member-community relationship dynamics (Hung, 2014). Belonging to a brand community has emotional significance, as it implies emotional group involvement, that is, attachment or affective commitment (Bagozzi and Dholakia, 2006; 2002). Moreover, emotional identification fosters loyalty and citizenship behaviours in group settings or subcultures (brand tribes or brand communities) (Bergami and Bagozzi, 2000; Meyer et al., 2002).

Scarpi (2010) argues that consumers in a brand community develop affect toward the brand due to shared brand experiences. This therefore means that identifying with a brand community means that members buy the same brand, share similar brand experiences, and

draw similar values from consuming the brand (Hung, 2014). Literature follows this rationale and argues that brand community or tribal members already possess strong favourable attitudes and emotional attachments toward the target brand before they join a brand community (Scarpi, 2010). Thus, it follows that existing tribal members are more likely to maintain the relationship with this community based on shared experiences, values, and passionate feelings toward the brand; this indicates that one's emotional brand attachment could lead to one's affective identification with a brand community consisting of the same brand adorers.

Moreover, previous research has demonstrated indirect evidence that supports the claim that brand attachment has a positive influence on brand community identification (Hung, 2014). Basing on this logic, literature places emphasis on the range of roles played by emotions, and postulates that consumers' positive emotional attachment toward the brand during the community identification process causes greater solidarity with the group (Hung, 2014). This therefore means that brand community [brand tribalism] is a form of extended self through which consumers build relationships and construct a social identity based on the shared passion, enthusiasm, and experiences surrounding the brand (Muniz and O'Guinn, 2001). In this current study, it is therefore postulated that brand tribalism leads to strong emotional bonds which will consequently lead to brand love. Drawing from the literature above, it is evident that brand tribalism or brand communities positively influence the consumer's brand love. In this study, it is expected that active tribal membership will influence brand love of imported wine brands. This study therefore proposes that there is a positive relationship between brand tribalism and brand love:

H1: *There is a positive relationship between brand tribalism and brand love*.

4.4 Brand Tribalism and Brand Preference (Hypothesis 2)

There is a general consensus among scholars that brands allow consumers to express group membership (Veloutsou and Moutinho, 2009; Grottand Johnson, 2013). Furthermore, tribes exist when members identify with each other with collective social action facilitated through brands (Goulding et al., 2013). A study reveals that consumers may form relationships with brands on the basis of several characteristics of these brands and their perception and behaviour towards them (Veloutsou and Moutinho, 2009). Also, it is believed that consumers no longer consume products solely for their utility, but also for their symbolic meanings

which represents images (Veloutsou and Moutinho, 2009). Previous research on brand communities predominately focused on luxury and high involvement products or brands (Cova and Pace, 2006).

Self-expressive brands are brands that consumers perceive to reflect their inner selves and that augment their social selves (Carroll and Ahuvia, 2006). Consumers purchase self-expressive brands or adopt tribal consumption in order to fit into a group (Ruane and Wallace, 2015). Self-expressive and symbolic brands are also used for symbolic consumption and constructing self-identities. Furthermore, a study asserted that consumers base their choices [preference] of a brand more on symbolic and self-expressive attributes (Veloutsou and Moutinho, 2009). This implies that the brand tribal members are likely to prefer symbolic brands that enhance their identities. Hence, brand tribalism is an antecedent of brand preference, also referred to as brand choice. Interestingly, previous research has also stressed the importance of building brand equity which brings the advantage of brand preference (Sasmita and Suki, 2015).

A study that was conducted to investigate tribal consumption behaviour and its relationship to branding, in the context of the surfing community in Portugal revealed that surfers prefer brands that sponsor surfing and avoid those that simply use surfing images in their advertising (Moutinho, Dionisio and Leal, 2007). Besides, surfers consider sponsor-brands to be legitimate supporters, a kind of "friendly" brand that really does serve the community. They prefer those with a well-recognised connection with surfing, but not necessarily a sponsoring relationship (Moutinho et al., 2007). Essentially, such brands are simply the external symbols of a life style of the brand tribe. As such, a brand serves the needs of the tribe and is thus preferred by tribal members. In the current study, brand tribalism is expected to positively influence brand preference of imported wine brands. Therefore, brand tribalism positively influences brand preferences. Drawing from the discussion above, this current study therefore hypothesises that:

H2: *There is a positive relationship between brand tribalism and brand preference*.

4.5 Brand Tribalism and Brand Credibility (Hypothesis 3)

As discussed previously, brand tribalism is a recent or contemporary marketing construct that warrants further research, specifically how it influences brand credibility. Veloutsou and

Moutinho (2009) argue that it is important to track trends that threaten to transform the culture and ideology of consumerism and the effect on consumer behaviour. In their arguments, brand tribalism is noted as one example. As mentioned previously, brand tribalism and brand communities are used interchangeably. Furthermore, research has shown that brand communities can facilitate information exchange between members, and thus positively improve the brand credibility (Koppelaar, 2014). Moreover, tribal member share information about their preferred brands and in the process, this tends to reinforce and build brand credibility.

McLaughlin (2016) argues that brand credibility entails three elements; trustworthiness, expertise, and likeability, all these element that marketers can strive to increase via their use of brand communities. One can infer that brand communities/brand tribalism can facilitate the abovementioned elements and ultimately lead to credibility of a brand. Moreover, research demonstrated that a brand [tribe's] information will be perceived more trustworthy if it comes from an unbiased source, such as a tribal member, or if a marketer can build a perception that the persuasion episode is in keeping with the persuasion target's (tribal member's) best interests (McLaughlin, 2016). In such a scenario, brand tribalism will lead to brand credibility.

However, one of the few existing studies related to brand tribalism investigated an opposite relationship where brand credibility positively influenced brand tribe membership. The study investigated brand credibility and brand expertise (through brand loyalty as a mediator) in the formation of brand tribe membership and the subsequent influence of brand tribe on consumer behaviour (Sigamoney, 2016). Brand is a signal of quality and product positioning (Ewert and Swait, 2004). Prior research has suggested that brand credibility positively affects brand purchase intention through perceived quality, perceived risk, and information costs saved. In particular, perceived quality refers to the consumer's judgment about the superiority or excellence of a product or service (Baek et al., 2010).

As mentioned before, brand tribe or communities like reference groups have the ability to influence the credibility of brands, especially in high involvement products like wine. Evidence from prior studies has supported a positive linkage between brand credibility and brand tribalism membership (Tuominen, 2011). They show that membership in a specific brand tribe influences the credibility of a preferred brand. This essentially means brand

tribalism is positively related to brand credibility. This study proposes that the brand tribalism positively influences brand credibility of imported wine brands. Therefore, drawing from empirical evidence and the discussion above, the current study posits the following hypothesis:

H3: There is a positive relationship between brand tribalism and brand credibility

4.6 Brand Love and Brand Preference (Hypothesis 4)

Drawing from the empirical literature, the process by which consumers prefer particular brands and establish relationships with brands – hence leading to brand love; is not yet well pronounced (Lourerio, 2016). In addition to that, marketers are concerned about gaining knowledge about how consumers relate to brands and develop brand preferences. For instance, marketers would want to know why other brands are preferred and loved (Lourerio, 2016). As a result, any potential bonds established between consumers and brands have gained substantial popularity amongst researchers and practitioners (Loureiro, 2016). Brand love in a consumer-brand relationship suggests that a consumer prefers a certain brand, mainly because that consumer loves the brand (Halilovic, 2013). This implies that a consumer who experiences brand love is likely to express preference towards a certain brand (Halilovic, 2013).

Park et al., (2010) point out that there is a need to manage the consumer's emotional attachment to brands that influences brand consideration, intention to perform difficult behaviours such as brand choice. The literature also indicates that consumers' emotional attachment is related to brand love and brand choice/brand preference. This therefore implies that it is important to understand brand love as it influences behaviour outcomes, such as brand preference. Further, one study also suggested that highly anxious and brand attached individuals demonstrate preference for exciting brands (Swaminathan, Stilley and Ahluwalia, 2008). In addition, under conditions of low avoidance and high anxiety, individuals tend to prefer sincere brands (Swaminathan et al., 2008).

In addition, one study investigated whether commitment towards a target brand limits set size and preference towards competition brands. In that study, brand commitment was defined as the deep emotional attachment consumers have towards a specific brand (Desai and Raju, 2007). This brand commitment definition is synonymous with that of brand love. Desai and

Raju (2007) concluded that brand committed consumers include their loved brands in their preference consideration set (Desai and Raju, 2007). This therefore implies that brand love is positively associated with brand preference.

Brand love is perceived as an important variable given that it may predict consumers' brand preference of imported wine. Brand love is constantly viewed as fairly new in marketing literature and has been shown to influence important marketing variables such as word-of–mouth and purchase decision making (Batra et al., 2012; Caroll and Ahuvia, 2006). However, before purchase action can take place, consumers have to prefer or have some liking towards that specific brand. Albert and Valette Florence (2010) recommend that brand managers can identify consumers who feel love towards their brand and then utilise this identification to recognise which features link the consumer to the brand (passion or affection). Marketers may possibly execute appropriate loyalty programmes and product launches that stimulate brand love and which can be expected to lead to brand preference.

In addition, in a study undertaken on brand passion, the authors found that brand passion in the form of idealisation and obsessive presence in the consumer's mind led to the desire to sustain a long-term relationship with the brand (Albert and Merunka, 2013). In the same vein, further literature also points out that the brand love construct is often used as a holistic term including many of the previously mentioned constructs, such as brand passion (Fetscherin, 2014). Simply put, brand passion is expected to lead to brand love which eventually facilitates brand preference.

In addition, a study on surname brand preference effect (Howard and Kerin, 2013) shed more light on brand love and brand preference relationship. It is expected that consumers can feel a greater depth of affective (emotional) attachment [brand love], as well as a stronger sense to commitment, to a brand with which they share a name for ego-centred reasons (Howard and Kerin, 2013). When consumers have and love a brand, they are highly likely to prefer it over competitors. Thus, we can conclude brand love leads to brand preference.

Furthermore, the preference for a brand is aroused by images and feelings which are in the people's collective unconsciousness (Filho et al., 2010). As such, an initiating field of analysis emerges in the effort to understand how strong and lasting emotional bonds (brand love) are structured in order to generate a superior brand value and brand preference (Filho et al., 2010). Nevertheless, there has been a growing interest from academics for studies that

test this relationship. In the current study, brand love is expected to positively influence brand preference of imported wine brands. Based on the findings from the literature and the discussion above, this study hypothesises that:

H4: *There is a positive relationship between brand love and brand preference.*

4.7 Brand Preference and Purchase Intention (Hypothesis 5)

This section discusses the relationship between brand preference and purchase intention. Venter, Chuchu and Pattison (2016) emphasise that the understanding of consumer preferences is an important tool for brand managers as this understanding can create innovative marketing strategies for the different brand categories that can target their consumers effectively. Marketing strategies that are tailor-made to influence target consumer preference can yield beneficial results such as increased purchase activity for the firm. Brand preference is closely related to brand choice that can stimulate consumer decision making and consequently activate brand purchase (Ebrahim, 2013). Previous literature has demonstrated that brand preference plays an important role in customers' selection of products (Ebrahim et al., 2016).

Tsai, Chang and Ho (2015) posit that preference is a type of attitude performance, which directs purchase decisions. This therefore means that preference of a brand directs or influences consumers' purchase intentions. Moreover, they introduce a concept, referred to as brand preference performance, which is a behavioural tendency. This behavioural tendency refers to how consumers show their preference for a brand, for example, by purchasing a certain brand or service or making a repeat purchase (Tsai et al., 2015). This concept therefore means that purchase activity is the outcome of a brand preference performance. On the other hand, another study found a relationship between brand preference and purchase intention. However, there is a linkage between brand preference and the purchase intention relationship which is mediated by brand image. Scholars argue that a positive brand image affects customers' preferences and ultimately, the purchasing behaviour (Fianto, Hadiwidjojo, Aisjah and Solimun, 2014).

In addition, literature suggests that consumer's brand perceptions are antecedents of brand equity that influence consumer preferences and purchase intentions (Chen and Chang, 2008). This is explained by a relationship of brand equity that leads to preference then to purchase

intentions (Chen and Chang, 2008). It can therefore be concluded that brand preference leads to purchase intentions. Research reports that, customers demonstrate their affinity for a brand by purchasing the same branded products or services or by showing preference towards a particular brand, bringing firms higher market share and higher profits (Jin, Lee and Jun, 2015). Higher market share and higher profits are as a result of purchase activity. This illustrates that brand preference likely positively influences consumer purchase intentions.

Research on the influence of consumer personality, brand personality, and corporate personality on brand preference in a four wheel passenger car market in India revealed that individual and brand personality has significant impact on brand preference for the considered brand by the consumers (Banerjee, 2016). Further, findings show that when consumers make a buying decision, their preferences are influenced by the personalities of both the product and the corporate brand (Banerjee, 2016). Against this backdrop, we can postulate that consumer preferences influenced product and corporate personalities positively lead to purchase intentions.

Empirical research on luxury customer experience suggests that one of the reasons why luxury products and services become preferred choices is that the customers put a value on easy shopping, based on their purchase experience and satisfaction (Hyun and Kang, 2014; Kim and Lee, 2013). This therefore implies that brand experience on luxury brands significantly influences customer preference and potentially relates to actual purchase. One of the key factors may be that customers prefer to choose credible brands in order to spend less time on shopping. Recently, research on brand preference includes a more technical definition of brand preference as "the extent to which the customer favours the designated service provided by a certain company, in comparison to the designated service provided by other companies in his or her consideration set (Jin et al., 2015). Jin et al. (2015) put forward that in the service industry context, the responses from the luxury restaurant customers confirmed that saved information cost and brand preferences towards a luxury restaurant brand directly influence customers' purchase behaviour. This also indicates that brand preference positively influences purchase intention.

Jin et al. (2015) also propose that customers' positive behavioural intentions indicate their conative loyalty and such indicators are linked to recommending and disseminating positive word-of-mouth about the company's products or services to others and repurchasing the

company's products. These positive inclinations lead customers to actually purchase products and service (Jin et al., 2015). Furthermore, research revealed that customers who speak highly of a company or service and convey their preference for a brand, are likely to increase their purchase activity and willingness to pay premium prices (Zeithaml et al., 1996, cited in Jin et al., 2015). This study however, expects that brand preference is likely to positively influence purchase intention of imported wine brands. Therefore, this study proposes that the higher brand preference is, the higher the consumer's purchase behavioural intention is likely to be preserved.

H5: *There is a positive relationship between brand preference and purchase intention*.

4.8 Brand Credibility and Brand Preference (Hypothesis 6)

Kemp and Bui (2011) argue that one important mechanism through which brands can impact consumer choice is brand credibility. This consumer choice is likened to brand preference in some parts in literature. This therefore means that highly credible brands are most likely to be preferred brand choices in the target consumer's mind.

In addition, brand credibility is influential in the consumer's consideration and purchasing process, where desired information surrounding the brand is unattainable due to physical or financial barriers. Erdem and Swait (2004) examined the impact of brand credibility on consumer choice and concluded that higher credibility increases the chances of the brand to be included in the consideration set. In the same vein, studies revealed that the more credible the brand the greater the likelihood is of a consumer including that brand in her/his choice and brand preference set (Swait and Ederm, 2007).

Moreover, a brand as a source of credibility results in lower costs owing to an information search, thereby satisfying the cost-benefit theory, for instance, a more credible brand will result in reduced costs, thus it is more likely to be considered (Chinomona et al., 2013). Similarly, another study found that one of the key factors may be that customers prefer to choose credible brands in order to spend less time on shopping (Jin et al., 2015). For instance, this can be revealed in the luxury restaurants where customers may tend to pay higher prices for food and services to reduce their risks on food quality and its service: reversely saving information costs through the purchase experience (Abdelhamied, 2011).

Brand trust also plays a mediating role between brand credibility and brand preference. This therefore means that consumers trust credible brands before making their ultimate preferences amongst the many brands available in the market. Chen and Chang (2012) allied their definition of trust from this point of view by saying that it is the willingness to rely on one object or person based on the belief or anticipation resulting from credibility, benevolence and ability that affect the formation of trust. Moreover, trust is the main key of an organisation to maintain a sustainable relationship between the consumer and seller (Suryaningsih et al., 2014).

Another study by Erdem and Swait (2004) argued that brand credibility can increase customers' positive perceptions of the brand, which lead to continuing purchases of the same brand from among their various preferences (Jin, Lee, and Lee, 2012). Literature investigated the direct impact of brand credibility on consumers' brand choice with moderating constructs of brand awareness and brand image (Wang and Yang, 2010). They found that credible brands are likely to influence consumer preferences. Hence, credible brands with a positive brand image and high brand awareness lead to consumer preferences.

In addition, a study examined the brand endorsements using spoke-characters as brand endorsers at the University of Witwatersrand in South Africa (Mashamwa, 2016). The findings advocate that spokes-character attractiveness and expertise, which are dimensions of brand credibility, influence attitude toward the advertisements and spokes-character trust influences attitude toward the brand. One can infer that brand credibility of a source is likely to positively influence attitudes or behavioural outcomes such as brand preferences. Subsequently, literature suggests that a well-designed and highly likable spokes-character increases attention to and preference for the brand, influences consumption behaviours and brand loyalty (Huang et al., 2013). Henceforth, one can deduce that the higher the credibility of the brand, the higher chances that it will influence consumer brand preference. In the current study, it is posited that brand credibility is likely to influence brand preference of imported wine brands.

This study therefore proposes that there is a positive relationship between brand credibility and brand preference:

H6: *There is a positive relationship between brand credibility and brand preference*.

4.9 Brand Credibility and Purchase Intention (Hypothesis 7)

Wang and Yang (2010) state that there is a dearth of literature that examined the relationship between brand credibility and brand purchase intentions. Brand credibility has been defined as a psychological factor which could facilitate repeat brand purchases or alternatively, a brand's reputation in economic literature (Sigamoney, 2016; Chinomona, Mahlangu and Pooe, 2013; Kuikka and Laukkanen, 2012). Credibility is rooted to "source credibility". When source credibility relates to brands, or when brands are referred to as its sources, the credibility concept represents brand credibility (Wang and Yang, 2010).The signalling theory suggests that a brand's credibility may increase decision convenience by providing clear and accessible information and thus increasing purchase intention (Jeng, 2016). In addition, the brand signalling theory suggests that brand credibility positively influences customer brand equity, this brand equity leads to purchase intentions (Shamim and Butt, 2013).

Brand credibility is influential in the consumer's consideration and purchasing process (Goldsmith, Lafferty and Newell, 2000; Kuikka and Laukkanen, 2012), and it also facilitates brand confidence (Baker et al., 2010). Subsequent, to prior findings other scholars posit that there are other key constructs that may have an impact on the relationship between brand credibility and consumers' brand purchase intention particularly in the luxury restaurant and imported wine industries (Jin et al., 2015). Hence, the brand credibility and purchase intention relationship is a crucial relationship for academics and marketers to investigate.

Few studies have been undertaken examining the relationship between brand credibility and purchase intention. For example, one study investigated the impact of brand credibility, on purchase intention of cold drinks amongst University students in Pakistan (Sheeraz, Iqbal and Ahmed, 2012). The findings revealed that brand credibility is significantly and positively associated with consumer purchase intentions (Sheeraz et al., 2012). Another study carried on dairy products in the Islamic region also found that brand credibility is important in the customer decision process and it ultimately positively influences the purchase intention of dairy products (Gilaninia, Ganjinia, Moridi and Rahimi, 2012).

In the context of spokesperson-endorsers, brand credibility favourably influences consumer purchase intentions (Mashamwa, 2016). This assertion corresponds with previous literature that suggests that the assumption is that spokes-characters primarily produce favorable

memory of an advert and brand content, brand attitudes, and purchase intentions (Folse et al., 2013).

In addition to brand credibility predicting purchase intention, it arguably found to be a fundamental factor for any brand's success hence, the growing interest amongst marketing practitioners to build and manage credible brands (Jin, Lee and Jun, 2015). One fundamental characteristic determining the strength of a brand is its credibility (Jin et al., 2015). Furthermore, scholars argue that the relationship between brand credibility and purchase intention is moderated by brand image and brand awareness (Wang and Yang, 2010). Furthermore, brand credibility can increase customers' positive perceptions of the brand, which lead to continuing purchases of the same brand (Erdem and Swait, 2004; Jin, Lee and Jun, 2015). Against, this backdrop, one can conclude that brand credibility not only leads to purchase intentions but it always yields repeat purchase behaviour.

In summary, brand credibility is positively related to consumer purchase intentions, this suggests that the higher the brand credibility the more likely it will be purchased by consumers (Sheeraz et al., 2012; Erdem and Swait, 2004). Moreover, brand credibility reduces uncertainty which puts the consumer at ease when faced with purchase decision (Sigamoney, 2016). For instance, if consumers perceive an imported wine brand to fulfil the three credibility dimensions, the more likely consumer will be persuaded to make a purchase decision. Drawing from this discussion, this study therefore proposes that there is a positive relationship between brand credibility and purchase intention.

H7: *There is a positive relationship between brand credibility and purchase intention*.

4.10 Brand Love and Purchase Intention (Hypothesis 8)

Branding plays an important role in the process of consumers' choice of the product (Yasin and Shamim, 2013). Branding strategies can be executed to influence or foster brand love amongst target consumers, given that a brand is an important link between the producer and the consumer, and offers the number of features to the customers that meet customer's needs through the process of purchase (Yasim and Shamim, 2013). Hence, consumers who love a certain brand are likely to purchase it.

Marketers have established that consumers are indeed attached to material goods and have been putting more and more emotional appeal into the sale strategy of their products (Filho et

al., 2010). Brand love is an example of an emotional attachment that consumers experience. As noted earlier on, Filho, Monteiro and Souki (2010) put forward that brand love is a new concept in consumer behaviour that precedes loyalty and purchase behaviour. In addition, Fetscherin (2014) postulates that there is a positive relationship between purchase intention and brand loyalty. However, Carroll and Ahuvia (2006) argue that brand love precedes loyalty. Drawing from these foregoing arguments, one can infer or hypothesise that brand love is most likely to influence purchase intention.

Furthermore, literature suggests that marketers expect the ultimate, long-term outcome of brand relationships, namely brand attachment, to be a determinant of both current purchase behaviour and future purchase intention (Esch, Langner, Schmitt and Geus, 2006). This brand attachment is closely related to brand love. In addition, psychological research has proven that attachment results in approach behaviour and a desire to be with the person to whom one is attached, both now and in the future (Esch et al., 2006). In the context of brands, it has been shown that a commitment to a brand saves a customer the cost of seeking new relations with other brands (Chaudhuri and Holbrook, 2001, cited in Esch et al., 2006). Additionally, brand attachment, such as bonds, connections and identifications with the brand strongly predict how often a brand was purchased previously and will be purchased in the future (McAlexander et al., 2003; Thomson et al., 2005).

There are possible linkages that could be suggested to facilitate the brand love and purchase intention relationship. Brand trust and brand loyalty constructs can be the possible linkage(s) between brand love and the purchase intention relationship. For instance, consumers tend to develop brand trust for brands that they love which in turn, encourages purchase intention. A long term relationship between an organisation and its exchange partner or consumer can be arranged if there is commitment and trust (Suryaningsih, Hadiwidjojo, Rohman and Sumiat (2014). There is a general consensus that the agreement of purchase transaction comes from the consumer's trust in a product that he is going to buy (Suryaningsih et al., 2014). Research findings prove that higher consumer's trust in the product attribute, the [greater] chances that the consumer will purchase the brand (Chui et al., 2012; McCole et al., 2010; Jimenez and Martin, 2010, Elliot and Yannopolou, 2007). Studies suggest that there is a positive relationship between brand love and psychological variables linked to brand performance, such as purchase intention (Pawle and Cooper, 2006; Sarkar and Sreejesh, 2014).

Studies indicate that there are many characteristics which are associated with the consumers' brand love (Yasin and Shamin, 2013). Specifically, these characteristics include brand attachment, passion for a brand, positive evaluation of the brand, declarations of love and positive emotions toward the brand (Yasin and Shamin, 2013).

According to the self-expansion theory in the branding context, consumers who are attached to a brand are not just the recipient of brand resources, but active participants in the investment of their own resources to the brand, particularly financial resources, such as willingness to pay a price premium (Thomas et al., 2005; Park et al., 2010; Sreejesh, 2015). Thus, one can deduce that brand attachments or brand love leads to purchase intention. In addition, these committed consumers are even willing to pay more for brands and service that they love and are emotionally attached to. Contrary to the few studies on brand love and purchase intention, scholars argued that brand love does not directly influence purchase intentions, but instead, that brand love influences brand jealousy, which motivates purchase intentions (Sarkar and Sreejesh, 2014).

Loureiro and Kaufmann (2012) postulate that brand love is a good predictor of recommendation and loyalty in the wine sector. In other words, consumers who have a passion for a particular wine brand are the first to buy it again and suggest it to others to buy (Loureiro and Kaufmann, 2012). Furthermore, studies reveal that the prediction of purchase intention is a central concern in marketing and argue that purchase intention is influenced by the attitude towards the brand, consumer satisfaction is one such attitude (Mirabi, 2015). Furthermore, consumer's satisfaction with a brand influences the willingness to buy this brand (Fetscherin, 2014). As mentioned previously, brand love is closely linked to satisfaction and the willingness to buy is the purchase intention. Thus, brand love is positively related to purchase intention. Since Fetcherin et al. (2014) posit that given that brand love precedes brand loyalty (Carroll and Ahuvia, 2006) and brand loyalty leads to purchase intention, it can therefore be expected that brand love positively influences purchase intention and the following hypothesis can be stated. In the current study, it is expected that brand love for imported wine brands will lead to purchase intention. By and large this study therefore hypothesises that;

H8: *There is a positive relationship between brand love and purchase intention.*

4.11 Chapter Summary

This chapter provided a proposed conceptual model formulated for this study. Thereafter, each hypothesis statement was developed for the current study. Existing literature on the proposed relationships was consulted and was operationalised for the study. This was carried out in order to thoroughly investigate existing relationships in the literature across different industries. Nonetheless, brand tribalism and brand love are relatively new emerging branding constructs with limited research, developing relationships with these constructs was a challenging task. The succeeding chapter presents the research design and methodology for the current study.

CHAPTER 5: RESEARCH DESIGN AND METHODOLOGY

5.1 Introduction

The present chapter details the methodology used for the present study in support of the proposed conceptual model, providing a detailed discussion on the following research strategy, research philosophy, sampling technique, data collection method and the statistical analysis used in this study. To sum up, a justification of the adopted methods is provided.

5.2 Research Philosophy

In every research carried out, the research philosophy is always the choice between five alternatives which are the positivist, post-modernism, interpretivist, pragmatism and realism (Saunders, Lewis and Thornhill, 2009). Research philosophy relates to the development of knowledge and the nature of the knowledge, precisely what you are doing when embarking on the research (Saunders et al., 2009). The research philosophy researcher adopts contains fundamental assumptions about the way in which you view the world (Saunders et al., 2009). That is to say, the assumptions dictate the research strategy and methods chosen as part of that strategy (Saunders et al., 2009). The research philosophy adopted is influenced by the particular view of the relationship between knowledge of the process by which it is developed and practical considerations (Saunders et al., 2009). Literature illustrates that interpretivist and positivist are the dominant philosophies.

5.2.1 Ontology

This is concerned with the nature of reality, it raises questions of the assumptions researchers have about the way the world operates and the commitment held to particular views (Saunders et al., 2009). Conversely, other scholars define ontology as a philosophical approach to theory building, based on investigating the universal and necessary characteristics of all existence (Crowther and Lancaster, 2009). Objectivism and subjectivism are the two facets of ontology discussed in the subsequent section.

5.2.1.1 Subjectivism

The subjectivist view is that social phenomena are created from the perceptions and consequent actions of social actors (Saunders et al., 2009). The basic premise for the

subjectivist view is that this is a continual process, that through a process of social interaction, these social phenomena are ever changing (Saunders et al., 2009). This relates to social constructionism that views reality as socially constructed (Saunders et al., 2009). The subjectivism advocates posit that it is imperative to explore the subjective meanings motivating the actions for social actors in order for the researcher to better understand actions (Saunders et al., 2009).

5.2.1.2 Objectivism

The basic premise of objectivism is that it portrays the position that social entities exist in the reality, external to social actors concerned with their existence (Saunders et al., 2009). Simply put, social factors do not directly influence or determine reality. Quantitative or positivist researchers view reality as objective or out there, essentially independent of the researcher (Creswell, 2009).

5.2.2 Epistemology

This entails what constitutes acceptable knowledge in a field of study (Saunders et al., 2009). Essentially, the researcher who considers data on resources needed is likely to be more akin to the position of the natural scientist (Saunders et al., 2009). Furthermore, epistemology is also a philosophical approach to theory building which investigates the nature, limits, grounds and validity of human knowledge (Crowther and Lancaster, 2009).

5.2.2.1 Positivist Philosophy

Positivism is a research philosophy that entails the collection of scientific data that is precise, based on measurement and is often analysed using statistics with the intention that the findings can be generalisable (Collins, 2010). Most importantly, the scientific method involves a cycle of investigation including the following stages: observation, identification of underlying patterns and generating a theory, forming a hypothesis, conducting research to test the hypothesis, and accepting or rejecting the theory (Grafstrom, 2010). The key feature of an experiment is that the researcher tries to control as many variables as possible while only altering the independent variable. Furthermore, the positivist paradigm guarantees that only phenomena that the researcher observes will lead to credible data (Saunders et al., 2009). Literature posits that to generate a research strategy to collect data, one is likely to use

existing theory to develop hypotheses, these hypotheses are tested, confirmed and subsequently lead to theory development which may then be tested by future research (Saunders et al., 2009). One method widely used in positivist philosophy is an experiment. Nonetheless, complete freedom from inclusion of the researcher's own values is completely impossible given that a positivist researcher exercises choice in the issue to study, research objectives to pursue and the data to collect (Saunders et al., 2009).

5.2.2.2 Interpretivist Philosophy

Interpretivism relates to the views of writers from various intellectual traditions who are critical of the application of the scientific model to study the social world (Bryman et al., 2016). In addition, interpretivism advocates that is necessary for the researcher to understand differences between humans in our role as social actors (Saunders et al., 2009). To add, this philosophy places emphasis on the difference between conducting research on humans rather than objects such as computers and vehicles (Saunders et al., 2009). Similarly, literature suggests that interpretivists begin from a premise that the subject matter of the social science is fundamentally different from the natural sciences (Bryman et al., 2016). That is to say, any research on the social world requires one to be cognisant about the distinctiveness of humans. Furthermore, interpretivist advocates posit that the researcher has to adopt an empathetic stance and it is arguably suitable for organisational behaviour, marketing and human resource disciplines (Saunders et al., 2009).

Table 5.1: Quality in positivist and interpretivist research

Positivist	Interpretivist
Objectivity	Trustworthiness
Validity	Confirmability
Reliability	Dependability
Internal validity	Credibility
External validity	Transferability

Source Lincoln and Guba (1985)

5.2.2.3 Realism Philosophy

Saunders, Lewis and Thornhill (2009) observed that realism is another philosophical position which relates to scientific enquiry. The basic premise for realism is that what the senses show us is a reality of the truth, that is to say, objects exist independently of the human mind (Saunders et al., 2009). Furthermore, realism philosophy is closely related to the positivist paradigm in that there is an external reality independent from scientists' descriptions of it (Bryman, Bell, Hirschsohn, Du Toit, Dos Santos, Wagner, van Aardt and Masenge, 2016). There is also a belief that the natural and social sciences can and should apply a similar approach to data collection (Bryman et al., 2016). Like positivism, realism is a branch of epistemology that assumes a scientific approach to the expansion of knowledge (Saunders et al., 2009). There are two types of realism which are direct and critical realism. Direct realism postulates that what we experience through our senses portrays the world accurately, conversely, critical realists argue that what we experience are sensations, the images of the things in the real world (Saunders et al., 2009).

5.2.2.4 Pragmatism Philosophy

The basic premise for pragmatism is that the most important determinant for epistemology, axiology and ontology you adopt is the research question (Saunders et al., 2009). In essence, pragmatism argues that it is more appropriate for a researcher to think of a philosophy adopted as a continuum rather than opposite positions (Tashakkori and Teddlie, 1998). In actual fact, pragmatism is intuitively appealing, largely because it deters the researcher from pointless debates about truth and reality (Saunders et al., 2009). Table 1 below is a summary that outlines the four philosophies and their related epistemology, axiology and ontology.

Table 5.2: Comparison of four research philosophies in management research

	Positivism	**Realism**	**Interpretivism**	**Pragmatism**
Ontology: The researcher's view of nature of reality or being	External, objective and independent of social actors	Is objective. Exists independent of human thoughts and beliefs or knowledge of their existence (realist) but interpreted through social conditioning (critical realist)	Socially constructed, subjective, may change, multiple	External, multiple, view chosen to best enable answering of research question
Epistemology: The researcher's view regarding what constitutes knowledge	Only observable phenomena can provide credible data, facts. Focus on causality and generalisations, reducing phenomena to simplest elements	Observable phenomena provide credible data, facts, and insufficient data means inaccuracies in sensations (direct realism). Alternatively, phenomena create sensations which are open to misinterpretation. Focus on explaining within a context or contexts	Subjective meanings and social phenomena. Focus upon the details of the situation, there is a reality behind these details, subjective meanings motivating actions	Either or both observable phenomena and subjective meanings can provide acceptable knowledge depending on research question. Focus on applied research, integrating different perspectives to help interpret data.
Data collection techniques most often used	Highly structured large samples, measurement quantitative but can use qualitative	Methods chosen must fit the subject matter, qualitative or quantitative	Small samples in-depth investigations, qualitative	Mixed or multiple method designs, qualitative and quantitative

Source: Saunders, Lewis and Thornhill (2009:119).

The current study employed the positivist research philosophy as it investigates the relationship between dependent and independent variables. At the outset, a thorough investigation of literature was conducted, followed by the development of a conceptual model. Thereafter, research hypotheses were developed to test the relationships between the independent and dependent variables. Finally, the presentation of the outcomes was conducted through the application of scientific methods without any influence of subjective elements (Saunders et al., 2009).

5.3 Research Approach

There are two approaches available to researchers: deductive and inductive approaches. The deductive process owes much to what we would think of as scientific research, it entails the development of a theory that is subjected to rigorous testing (Saunders et al., 2009). Essentially, a deductive approach aims to explain the causal relationship between the variables and has a structured methodology to facilitate results that can be generalisable (Saunders et al., 2009). In addition, deductive research develops theories and hypotheses and then tests these hypotheses and theories through empirical observation (Crowther and Lancaster, 2009). Alternatively, inductive research is the opposite of deductive research, the researcher develops hypotheses and theories with the objective of explaining empirical observations of the real world (Crowther and Lancaster, 2009). The inductive approach is likely to be concerned with the context in which events are taking place and designing research strategies that work for each unique setting (Saunders et al., 2009; Crowther and Lancaster, 2009). To add, inductive research, and investigations begin from description or observation and then move toward explanation (Crowther and Lancaster, 2009). Table 2 outlines the major differences between the deduction and induction research approaches.

Table 5.3: Major differences between deductive and Inductive approaches to research

Deduction emphasises	**Induction emphasises**
Science principles	Gaining an understanding of the meanings human attach events
Moving from theory to data	A close understanding of the research context
The need to explain causal relationships between variables	The collection of qualitative data
The collection of quantitative data	A more flexible structure to permit changes of research emphasis as the progress
The application of controls to ensure to validity of data	A realisation that the researcher is part of the research process
The operationalization of concepts to ensure clarity if definition	Less concern with the need to generalise findings
A highly structured approach	
Researcher independence of what is being researched	
The necessity to select samples of sufficient size in order to generationalise conclusions	

Source: Saunders, Lewis and Thornhill (2009:127)

The present study utilises the deductive research approach to test theoretically formulated hypotheses. Initially, pre-specified variables were measured, while participants' responses were analysed in terms of the formulated hypotheses from existing theory. In this respect, the theory is formulated by a means of formulated hypotheses through an empirical study and statistical methods. Moreover, the deductive approach is acceptable to positivist paradigms.

5.4 Research Strategies

Research strategies are classified into seven, namely, experiment, grounded theory, survey, case study, action research, archival and ethnography (Saunders et al., 2009). Each of these has merits and demerits. Researchers choose a particular strategy that appropriately answers their research question. Table 5.4 outlines the key features of research strategies. Lastly, a rationale for using a survey method is presented.

Table 5.4: Summary of key features of research strategies

Strategy	Characteristics
Case study	It is widely used in exploratory and explanatory research. It is ideal for researchers aiming to gain understanding on the context. Data collection techniques are likely to be used in combination. The researcher is likely to use triangulation method.
Survey	A strategy usually associated with the deductive approach, popular strategy in business and management research and is frequently used to answer who, what, where, how much and how many questions.
Grounded theory	It is particularly helpful to predict and explain behaviour. Essentially linked to theory building through a combination of induction and deduction. Theory is developed from the data generated by a series of observations.
Experiment	The purpose of this strategy is to study causal links, whether a change in one independent variable leads to a change in another. Complex experiments consider the size of the change and the relative importance of two or more independent variables.
Action research	The researcher is part of the organisation within which the research and the change process are occurring rather than typical research where employees for instance are subjects of a study.
Ethnography	It is widely used in the induction approach, the purpose is to describe and explain the social world the research participants inhabit in the way in which they would describe and explain it.
Archival	Makes use of administrative documents and records as the main sources of data. This strategy allows research questions which focus on past and changes over time to be answered. It is ideal for explanatory, exploratory and descriptive designs.

Source: Saunders et al. (2009:141-150)

The present study follows the survey strategy since a deductive research approach was adopted, also the nature of the questions were closed ended. In addition, a descriptive

research design was adopted and the findings of the study were quantitatively analysed. More so, this survey strategy allowed the researcher to collect large amounts of data in an economic way.

5.5 Research choices

Table 5.5: Differences between qualitative and quantitative research

Quantitative	Qualitative
Numbers and measurements	Words and descriptions
Researcher's view point	Participants view point
Researcher detached from the subjects	Researcher involved with participants
Testing theory and concepts	Theory and concepts emergent from data
Static image of social reality	Interconnected process between actors
Structured data collection	Flexible investigation
Generalizable to the population	Understanding of the context
Hard reliable data	Rich, deep, thick data
Macro- large scale patterns	Micro small scale explanations
Behaviour of people	Meaning of action
Artificial settings	Natural settings

Source: Adapted from Bryman et al. (2016:51)

5.5.1 Justification of a quantitative approach

Quantitative research methods are generally widely used in business, consumer behaviour and social science research. The present research aims to examine the relationship between brand tribalism and purchase intention with brand love, brand credibility and brand preference as mediating variables. The quantitative research approach tends to emphasise quantification in the collection and analysis of data and adopts a deductive approach to the relationship between theory and research and incorporates norms of natural sciences and of positivism (Bryman et al., 2016). Moreover, quantitative data is often perceived to be more objective and scientific than qualitative (Crowther and Lancaster, 2009).

5.6 Sampling selection

The design of samples is a particularly important aspect of survey methodology, and provides a basis for the sound measurement of economic and social phenomena from surveys of businesses and households (Aaker et al., 2004). There are two approaches in selecting a sample namely; probability (representative sampling) and non-probability sampling methods. Non-probability sampling techniques allow the researchers to select samples based on subject judgement (Saunders et al., 2009).

5.6.1 Probability Sampling Techniques

5.6.1.1 Simple Random Sampling

This is a sampling technique that is used when the researcher aims to give each item in the population an equal chance of being selected in the sample as every other member (Burton, Caroll and Wall, 1999). In essence, the key objective of random sampling is to obtain a sample that fairly reflects the population as holistically as possible (Burton et a., 1999). The sample can be generated from either a random numbers table or an online random number generator (Saunders et al., 2009).

5.6.1.2 Stratified Sampling

Stratified random sampling is a modification of random sampling in which you divide the population into two or more relevant and significant strata (Saunders et al., 2009). This is a sampling technique that is most preferred when the population is segmented and when it contains very different sub-sets of items or subjects (Burton et al., 1999).

5.6.1.3 Systematic Sampling

Systematic sampling involves the researcher selecting a sample at regular intervals from the sampling frame (Saunders et al., 2009). Contrasting with simple random sampling, this sampling technique can be appropriate for small or large number cases (Saunders et al., 2009).

5.6.1.4 Cluster Sampling

This sampling technique is similar to stratified sampling as it requires the population to be divided into discrete groups (Saunders et al., 2009). This sampling technique is ideal where

the population is widely spread geographically, but where the various clusters are broadly representative of that population (Burton et al., 1999).

5.6.2 Non-Probability Sampling Techniques

5.6.2.1 Quota sampling

This sampling technique is a type of stratified sampling in which selection of cases within strata is random and is normally used for interview surveys (Saunders et al., 2009). It is widely used in market research, a sample includes a specified number of quota or subjects with given attributes (Burton et al., 1999).

5.6.2.2 Purposive or Judgemental Sampling

Purposive sampling enables one to use their judgement to select cases that will best enable research questions and objectives to be met (Saunders et al., 2009). The key to selecting respondents with this sampling technique is to use information rich or knowledgeable respondents.

5.6.2.3 Convenience Sampling

This sampling technique is also referred to as haphazard sampling (Saunders et al., 2009). It involves selecting cases that are easiest to obtain for a sample and the sampling process continues till one reaches the required sample size (Saunders et al., 2009). It is a popular and inexpensive sampling technique. Nonetheless, this sampling technique is prone to bias.

5.6.2.4 Snowball Sampling

This is a sampling technique that is commonly used when it is difficult to identify members of the desired population (Saunders et al., 2009). The demerit to this sampling technique is bias as respondents are most likely to identify other potential respondents who have similar traits to themselves (Saunders et al., 2009).

5.6.3 Motivation for a non-probability sampling technique

Literature suggests that in some instances, the researcher has no option but to utilise a non-probability technique especially where the researcher is confronted with challenges such as a hidden or unknown sampling frame (Cooper and Greenaway, 2015). The current study

employed non-probability sampling techniques, namely, judgement and snow ball sampling to select respondents for the study. This was due to the fact that there was no clear sampling frame of wine drinkers in South Africa. Initially, the researcher identified wine drinkers among their contacts on social networks (Facebook, Twitter and Instagram). Thereafter, a link to the survey hosted on Qualtrics was sent out to prospective respondents to partake in the study. Thereafter, those respondents referred the researcher to their fellow wine drinking friends to be part of the study.

5.6.4 Population of Interest

A research population is the total collection of elements which a researcher aims to make inferences from for a given study (Sekaran and Bougie, 2010).Target population in this study refers to the entire group of interest that the researcher will investigate. Furthermore, the population element is the individual participant or object on which the measurement is taken, it is the unit of study (Blumberg et al., 2005). A research population is the total collection of elements which a researcher aims to make inferences from for a given study (Sekaran and Bougie, 2010). It is for this reason that the researcher drew a sample from the population of 6 234 727 wine drinkers in South Africa (SAWIS, 2015).

5.6.5 Sampling Frame

A list of all units from which a population is drawn is represented by a sample frame (Bryman, 2012). Similarly, literature also defines a sampling frame as a complete list of all cases in the population from which the sample will be drawn (Saunders et al., 2009). This sample frame is easily accessible to the researcher and comprises diverse adults all over South Africa. The sampling frame consists of the list of the researcher's Facebook, Twitter, Instagram and email contacts, who are of legal drinking age (eighteen) and who consume wine and also reside in South Africa.

5.6.6 Sample Size

Hair, Black, Babin and Anderson (2010) posit that robust statistical analysis such as structural equation modelling, should use a sample size of at least five times the number of constructs to ensure the maximum likelihood of estimation. For the purposes of this study, the sample size was determined using the sample size Rasoft® calculator. Raosoft is statistical

software that is used to calculate sample size. Raosoft takes into account the following factors; the margin of error, the confidence level, the population size and the response distribution. The researcher used a margin of error at 5%, confidence level at 95%, population size of 6 234 727 and a response distribution of 50%. The sample size was 385 wine consumers from the researcher's Facebook and email contacts. The respondents were mainly selected from Gauteng, Western Cape and from KwaZulu-Natal which are the top three wine consuming regions in South Africa (SAWIS, 2011). This made a sufficient sample for the Amos software that the researcher chose to employ.

5.7 Design of the Measurement Instrument

A questionnaire is a pre-formulated written set of questions to which respondents record their answers usually with relatively closely defined alternatives. Mostly, questionnaires are a preferred data collection tool where large numbers of people are targeted in different geographic regions (Sekaran and Bougie, 2010). In addition, questionnaires are a popular method of data collection tool because researchers are able to obtain information fairly easily and questionnaire responses are easily coded (Sekaran and Bougie, 2010). The principles of questionnaire design relate to how questions are worded and measured and how the questionnaire is organised (Sekaran and Bougie, 2010).

In an effort to ensure validity and reliability in this current study, a few steps were taken prior to data collection; the formulation of the questionnaire took into account how the research constructs have been previously defined in existing studies. Thereafter, the measurement instruments were adapted from existing literature and operationalised for then present study which focused on purchase intention for international wine brands in South Africa. The current study used online questionnaires which are discussed in the succeeding paragraph.

There are several advantages of using online surveys. Most importantly, conducting research online saves time and money. In addition, online surveys allow for reaching a larger number of participants over a shorter period of time compared to other survey methods (Duffy, Smith, Trthanian and Brener, 2005). Taylor (2000) argues that the use of online surveys allows for more visual, flexible and interactive research, especially in comparison with telephone surveys. Most importantly, online surveys do not require the interviewer to be present, thus eliminating the possibility for interviewer bias (Duffy et al., 2005). Nonetheless, as with any data collection techniques, online surveys have limitations such as; the researcher can only

use respondents who have internet access and that online respondents answer scales differently from other conventional modes of research (Duffy et al., 2005). Lastly, online surveys run the risk of low response rates (Duffy et al., 2005).

5.8 Data Collection Technique

For the purposes of this study, the researcher utilised the online survey method in order to collect the primary data. The online questionnaire was distributed to the research contacts on Facebook, Twitter, Instagram and email who consume wine and reside in South Africa. The quantitative data collection method constructs results that are easy and simple to summarise, compare, evaluate, and generalise.

Quantitative research follows a scientific method, usually descriptive in nature, and helps the researcher to determine causal relationships between variables, and the data can be interpreted using statistical analysis (Berndt and Petzer, 2011). This study utilised an online survey method. Prior to this, in order to ensure the fitness of purpose, language, wording, sequence and layout of the questionnaire, three-stage piloting was adopted (Serra et al., 2012). First, 30 randomly selected individuals with different educational backgrounds, pre-tested the questionnaire for any ambiguities, and face validity of the measures. Amendments or adjustments were then made to the questionnaire.

5.9 Measurement scale

The present study used a 5-item Likert scale. These scales are predominately used for testing perceptions, attitudes and behaviour (Miller and Brewer, 2003). Moreover, Likert scales are predominately used in survey research due to the wide range of answers that allows the respondents to answer accurately.

Research scales were operationalised on the basis of previous work. Proper modifications were made in order to fit the current research context and purpose to those taken from the existing literature. “Purchase intention” used a five-item scale adapted from Bolton and Drew (1991). “Brand preference” used a five-item Likert scale adapted from Liu and Chang (2009). “Brand credibility” used a five-item Likert scale adapted from Ederm, Swait and Louviere (2002). “Brand tribalism” used a five-item Likert scale adapted from Veloutsou and Moutinho (2009). Lastly, “brand love” used a five-item Likert scale adapted from Carroll and Ahuvia (2006). All the measurement items were measured on a five-point Likert-type scale

that was anchored by 1= strongly disagree to 5= strongly agree to express the degree of agreement.

5.9.1 Independent (predictor) variable

An independent or dependent variable refers to a variable that is used to define a given response and usually used simultaneously with other variables. In this study, brand tribalism is the predictor variable. Brand tribalism was measured using existing scales adapted from Veloutsou and Moutinho's (2009) 5-item Likert scale. The dimensions were adapted to suit the context of the study. Participants were asked to rate their level of agreement on a 5-item Likert scale (1- strongly disagree; 2- disagree; 3- neutral; 4- agree; 5 strongly agree).

The following items were used to measure Brand tribalism

- This brand fits my image
- My friends buy this brand and I buy it too just because I want to be like them
- This brand is related to the way I perceive life
- I achieve a sense of belonging by buying the same brand my friends buy
- I would buy this brand because I am sure that my friends approve of it

5.9.2 Mediating variables

5.9.2.1 Brand Love

Brand love was measured using Carroll and Ahuvia's (2006) 5-item Likert scale. The dimensions were adapted to suit the context of the study. Participants were asked to rate their levels of agreement on a 5-item Likert scale (1-strongly disagree; 2-disagree; 3- neutral; 4 agree; 5 strongly agree.

The following items were used to measure Brand love

- I love this brand
- This brand is a pure delight
- This brand is totally awesome
- This brand makes me feel good

5.9.2.2 Brand Preference

The following items were used to measure Brand preference on a 5-item Likert scale. The dimensions were adapted to suit the context of the study. Participants were asked to rate their levels of agreement on a 5-iem Likert scale (1-strongly disagree; 2-disagree; 3- neutral; 4 agree; 5 strongly agree;

- I think X is superior to other competing brands I prefer X
- I prefer X
- I am interested in trying other brands
- I am interested in trying other brands
- I intend to replace my service provider with other brands

5.9.2.3 Brand Credibility

The following items were used to measure brand credibility. The dimensions were adapted to suit the context of the study. Participants were asked to rate their levels of agreement on a 5-item Likert scale (1-strongly disagree; 2-disagree; 3- neutral; 4 agree; 5 strongly agree).

- This brand delivers what it promises
- This brand's product claims are believable
- This brand has a name you can trust
- This brand reminds of someone who's competent and knows what he/she is doing

5.9.3 Outcome Variable

The following items were used to measure Purchase Intention were adapted from Bolton and Drew (1991) and operationalised for the current study. The dimensions were adapted to suit the context of the study. Participants were asked to rate their levels of agreement on a 5-item Likert scale (1-strongly disagree; 2-disagree; 3- neutral; 4 agree; 5 strongly agree).

- I would buy imported wine products buy imported wine brands
- My willingness to buy imported wine brands is high.
- I am likely to purchase imported wine brands.
- I have a high intention to buy imported wine brands.

5.9.4 Pretesting the Instrument (Pilot study)

Once the survey was developed, a pre-test was conducted to pilot the research instrument to confirm its fit for the purpose of the study. Burns and Burns (2008) posit that pilot testing is done to make corrections to improve the clarity of the questionnaire. After careful consideration, the researcher deemed it fit to use academics and a few individuals from the sample for the pilot study in order to get inputs and viewpoints from experts (academics) and laymen (study respondents). To add, pilot testing helps minimise respondents' errors due to ambiguous questions. The first step was to ascertain face validity by consulting three academics in the field of Marketing at University of Witwatersrand. In addition, a pilot study of 30 people were randomly selected from the existing database of the sample of respondents in order to evaluate the clarity of the instructions and the language used in the survey instrument (questionnaire). Comments on unclear words or phrases on certain parts of the questionnaire were raised. The researcher, together with the supervisor incorporated the comments without compromising the quality and also ensured that the questionnaire remained sufficient to measure the research objectives.

5.9.5 Editing and coding

After the data collection is completed, the data must be converted into a format that answers the researcher's questions and objectives. This initially begins with a process of preparing data. This process ensures that the accuracy of the data and their conversion from raw forms into classified appropriate data will make it simpler for data analysis.

5.10 Data Analysis

The study made use of both descriptive and inferential statistics to summarise, organise and simplify the data. In this study, data analysis was done in Amos version 24, which is an extension of SPSS. Prior to data analysis commencement, the data was coded into a Microsoft Excel spreadsheet and subsequently cleaned by rectifying all transcription errors or omissions by returning to the completed questionnaires to check the correct response. Thereafter, the edited and coded data was imported into SPSS version 24, then AMOS version 24.

5.10.1 Descriptive statistics

In essence, descriptive statistics entail the measure of different aspects of the population. A summary of the respondents' demographic profiles such as age, gender, educational qualification, geographic location and region where they buy their wine is presented in this study.

5.10.2 Reliability and Validity of the Measurement Instrument

The reliability and validity of the measuring instrument was also tested using the Measurement Model Assessment (CFA). For example, reliability was tested using the Cronbach's alpha value. This section seeks to provide an overview of the measurement instruments for reliability and validity. Reliability refers to the extent to which your data collection techniques or analysis procedures yields consistent findings (Saunders, Lewis and Thornhill, 2009). The reliability of the scale refers to the extent to which the scale produces consistent results when being re-used (Hair et al., 2009). For the present study, Cronbach coefficient alpha and composite reliability (CR index) were used to measure the reliability of the instrument.

5.10.2.1 Cronbach's Coefficient Alpha

Cronbach Alpha is used to assess the reliability of the scales that are used in the questionnaire, with reliability threshold of a value greater than 0.7 (Hair et al., 2009).

5.10.2.2 Internal Reliability

Internal reliability is evaluated by examining the composite reliability (CR) index. Hair et al. (2009) posit that for the Composite Reliability to be accepted, the index should be greater than 0.7 (Hair et al., 2009). Composite reliability (CR) is calculated by using the formula: $CR\eta = (\Sigma\gamma yi)^2 / [(\Sigma\gamma yi)^2 + \Sigma\varepsilon i]$; this formula is comprehended in the following manner: Composite Reliability = (square of the summation of the factor loadings)/ {(square of the summation of the factor loadings) + (summation of error variances)}.

5.11 Validity

Validity is concerned with whether the findings are really about what they appear to be about (Saunders, Lewis and Thornhill, 2009). In addition, scholars revealed that of all the types of

validity, construct validity is the one that necessitates testing to authenticate the model (Sekaran and Bougie, 2010). Also, perfect validity requires that there be no measurement error, that is, no systematic error and no random error (Malhotra, 2015). In a positivist study, the validity in quantitative research is mainly concerned with whether a measurement of a concept fundamentally measures what it is designed to measure (Bryman, 2012).

In addition, scholars observe that if a measure is valid, it is reasoned to be reliable (Malhotra, 2015). Nevertheless, reliability is essential, but not a sufficient condition for validity (Malhotra, 2015). In fact, construct validity measures how well the results from the data collection process fit the theories used.

5.11.1 Convergent Validity

Convergent validity was tested by using item loading value and average variance extracted (AVE) in this study. In order to check the convergent validities of the measurement items, all the estimates or factor loadings should be greater than 0.70 to calculate the Average Variance Extracted (AVE), and it was suggested that a threshold for AVE should be 0.5 (Fornell and Larcker, 1981). This therefore means that if the AVE value is equal or greater than 0.5, all elements converged well on the construct they were supposed to measure. To calculate the Average Variance Extracted (AVE), the standardised factor loading values in the CFA results are used. The formula below is used to calculate the Average Variance Extracted (AVE): $V\eta=\Sigma\lambda yi2/(\Sigma\lambda yi2+\Sigma\varepsilon i)$

Additionally, this formula is also explained in the following manner: AVE = {(summation of the squared of factor loadings)/ {(summation of the squared of factor loadings) + (summation of error variances)}.

5.11.2 Discriminant Validity

Discriminant validity was measured using Average value extracted (AVE) and shared value (SV) in this study. In addition, another measure for evaluating discriminant validity is observing whether the AVE value is greater than the highest shared variance (SV) value (Nusair and Hua, 2010). If the latter is found, this means discriminant validity is confirmed (Venter, Chuchu and Pattison, 2016). Chin (2010) posits that the rule of thumb for assessing

discriminant validity demands that the square root of AVE be higher than the squared correlations between constructs.

5.12 Confirmatory Factor Analysis

The validity of an instrument is fundamental for any study's accuracy. The following section presents the model fit indices used in this study.

5.12.1 Model Fit Indices

5.12.1.1 Chi-square (χ2 /DF)

The chi square fit statistic tests a hypothesis of precise fit of the proposed model in the population (Nevitt and Hancock 2000). A chi-square value below three is regarded to be an acceptable model fit as suggested by Chinomona (2011).

5.12.1.2 Goodness-Of –Fit Index (GFI)

The Goodness of Fit is one of many criterion values for indicating satisfactory model fit suggested by researchers (Cheung and Rensvold, 2002). GFI varies from 0-1, but theoretically can yield meaningless negative values. Through general consensus, GFI should be equal to or greater than 0.90 to accept the model (Bollen, 1990).

5.12.1.3 Normed Fit Index (NFI)

Bentler and Bonnet (1980) posit that the Normed Fit Index (NFO) assesses the model by comparing the $x2$ value of the model with the $x2$ of the null model. Furthermore, values for this statistic range between 0 and 1, with values bigger that 0.9 indicating a good fit (Bentler and Bonnet, 1980). Hu and Bentler (1999) also concur that a generally acceptable NFI values below 0.90 indicates a need to re-specify the model. One possible limitation of this index is that it is sensitive to sample size (Mulaik, James, Van Alstine, Bennet, Lind, and Stilwell, C.D, 1989; Bentler, 1990). This problem is overcome by using the Tucker-Lewis Index.

5.12.1.4 Tucker-Lewis Index (TLI)

The Tucker-Lewis Index (TLI) makes use of simple models and is known to address the short-comings of The Normed Fit Index (NFI) associated with sample size. The

recommended value that must be met, must be above 0.9 (Hooper, Coughlan and Mullen, 2008; Chinomona, 2011).

5.12.1.5 Comparative Fit Index (CFI)

The Comparative fit index (CFI) analyses the model fit through assessing the discrepancy between the data and the hypothesised model (Grafström, 2010). The CFI is a revised version of the normed fit index (NFI), which is responsible for the sample size (Byrne, 1998). The CFI also addresses sample size issues normally associated with the chi-square test and the normed fit index (Bentler, 1990), and functions well, even when the sample size being used for the study is small (Tabachnick and Fidell, 2007). Additionally, studies put forward that a value equal or greater than 0.9 is an indication of acceptable model fit (Hue et al., 1999; Chinomona, 2011).

5.12.1.6 Root Mean Square Error of Approximation (RMSEA)

RMSEA essentially takes into account the error of approximation in the population. Furthermore, the RMSEA is usually used as an alternative for the chi-square test. Tabachnick and Fidell (2007) state that the goodness-of-fit (GFI) calculates the variance that is accounted for by the estimated population covariance. Chinomona (2011) advises that a good model fit for RMSEA is considered to be less than or equal to 0.5 and an adequate fit if RMSEA is less than or equal to 0.8.

5.12.1.7 Incremental Fit Index (IFI)

The incremental fit index (IFI) was introduced in order to address parsimony and sample size issues which are also associated with the NFI (Bollen, 1989). Secondly, incremental fit indices are also referred as Comparative Fit Indices and serve a purpose to compare the Chi-square value to the baseline model, rather than using the Chi-square in its raw form (Miles and Shevlin, 2007). For these models, the null hypothesis is that all variables are uncorrelated (McDonald and Ho, 2002).

5.13 Path modelling and hypotheses testing

It is primarily designed for structural equation modeling (SEM), path analysis, and covariance structure modeling. SEM is a statistical methodology used for hypotheses testing

to analyse structural theory that is based on some phenomenon (Hair et al., 2010). Several aspects set structural equation modelling (SEM) apart from older generations of multivariate procedures. Most importantly, it takes a confirmatory approach rather than an exploratory approach (Bryne, 2010). Contrary to most other multivariate procedures that are incapable of assessing or correcting for measurement error, SEM provides explicit estimates of possible error variance parameters (He, Gai, Wu and Wan, 2012). In essence, SEM procedures can incorporate both unobserved and observed variables (Qureshi and Kang, 2014; Bryne, 2010). Finally, there are widely and easily applied alternative methods for modelling multivariate relations. Given these desirable characteristics, Structural equation modeling has become a popular methodology for non-experimental research and is deemed appropriate for this research (Kaplan, 2009). Further, path modelling was done to test the fit of the correlation matrix.

5.14 Ethical considerations

The study involved humans, therefore certain protocols had to be followed. Permission to conduct the study was approved by the University of Witwatersrand ethics committee as mentioned in chapter one. Participants were informed that their response to the online survey will be treated as consent as stated boldly in the online participant information sheet. The participant information sheet also explained the purpose and the conditions of taking part in the survey. Research respondents were informed that participation in this study was completely voluntary and they were allowed to withdraw from the study at any stage. Additionally, all questionnaires were anonymous and the study did not expose the participants to any harm or intimidation. Participants were informed that all primary data gathered from the research would be kept strictly confidential, not sold to a third party, and that it would solely be used for academic purposes. Moreover, the data would be kept between the supervisor and the student researcher. Since this was an online survey, data collected would be stored on Microsoft excel sheet and kept in a password encrypted computer that only the supervisor and researcher have access to. The data would be kept for a period of five years then destroyed.

5.15 Chapter Summary

This chapter began by providing a presentation of the research design employed for the study. The research philosophies were discussed, thereafter, the motivation for using a positivist research philosophy was presented. The research approach adopted for the current study was then discussed. Thereafter the research design was outlined which includes target population, sampling techniques, measurement instrument. In addition, this chapter discusses the editing and coding, data analysis. Last but not least, the ethical considerations of the study are outlined. The next chapter presents the findings of the research.

CHAPTER 6: PRESENTATION OF RESULTS

6.1 Introduction

Chapter five (5) provided a detailed account of the research methods and techniques used to collect data for the present study. The current chapter presents the data and statistical analysis conducted for the study. First, the data analysis was conducted using Statistical package for the social sciences (SPSS) 24 for the descriptive statistics, while the path modelling and model fit was conducted using AMOS version 24. Thereafter, an outline of the descriptive statistics, an analysis of the reliability and validity of the measurement instrument, an overview of the model of fit and lastly, a path modelling analysis is presented. Cronbach`s Alpha, the Composite Reliability (CR) value are used to measure reliability of the study while Average Variance Extracted (AVE) are used to measure validity. Factor Analysis is used to check convergent validity and correlation matrix and chi-square - CFA difference are used to check discriminant validity. Thereafter, the research model fit is presented. Furthermore, a number of indicators such as the chi-square value, Goodness of Fit Index (GFI), Normed Fit Index (NFI), Lewis-Tucker Index (TLI), Incremental Fit Index (IFI), Comparative Fit Index (CFI) and Root Mean Square Error of Approximation (RMSEA) are presented to ascertain whether or not the research models fit the data. Finally, a summary of the chapter is presented.

6.2 Data Screening and Cleaning

Blumberg, Cooper and Schindler (2014) recommend that the data has to be screened before any statistical analysis is performed. This data screening is a fundamental stage because it allows the researcher to cleanse the data and ensure that incomplete entries are discarded. It is important for the researcher to ensure accuracy of data entry and assessment of outliers before proceeding to analyse summary statistics for the survey responses. The data screening process entails questionnaire checking, editing, coding and discarding incomplete entries. In the present study, 379 questionnaires were completed and carefully checked for any errors. Thereafter, incomplete questionnaires were discarded, and finally only 321 were deemed usable for analysis.

6.3 Data Analytical Procedures

In this study, several statistical methods or techniques were employed to analyse the empirical data. First and foremost, coefficient alpha and adjusted item-to-total correlations were used in evaluating the internal consistency of each construct or variable. Data was analysed using SPSS version 24. Thereafter, AMOS version 24 was used for the assessment of final measures and confirmatory factor analysis. Furthermore, other statistical tests were used to validate measures involved the assessment of items and scale reliability, convergent and discriminant validity.

6.4 Statistical Analytical Procedures

Figure 6.1: The Statistical Analytical Procedures

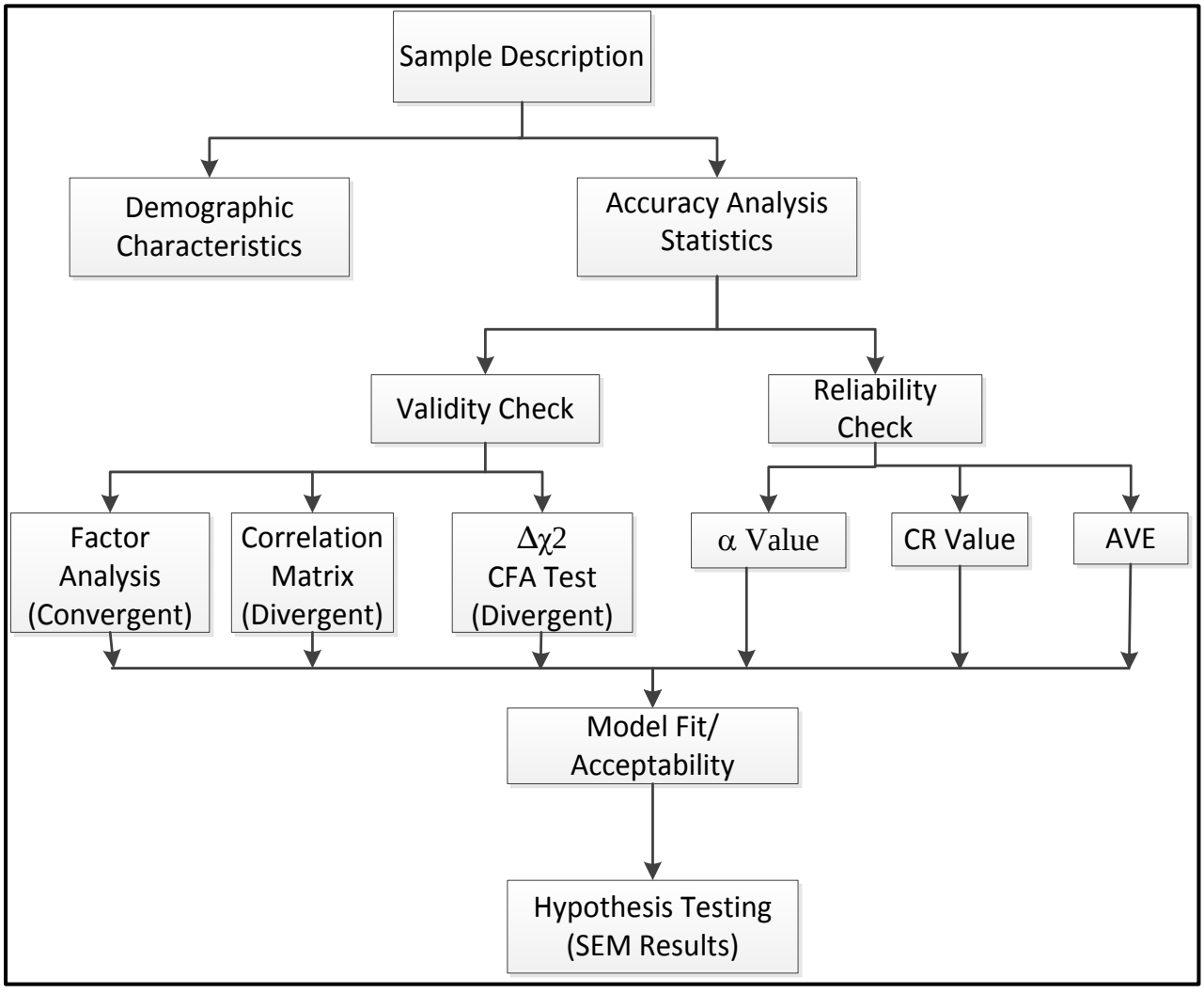

Compiled by researcher (2016).

6.5 Demographic Statistics

This section presents the demographic profiles of the respondents for the present study. This entails their gender, age, highest academic education and the province in which respondents reside. Thereafter, results of the purchase frequency and the region-of-origin or country-of-origin preferences of wine consumers are presented. In addition, results of the cross tabulation are presented. The demographic statistics are summarised and presented in table 6.1 below.

Table 6.1 Sample Demographic Profile summary

Gender	**Frequency**	**Percentage %**
Male	100	31
Female	218	68
Prefer not to say	3	1
Total	321	100
Age		
18-24	56	17
25-30	154	50
30-35	79	24
35-38	32	10
Total	321	100
Education Level		
High School	45	14
Diploma	56	17.4
Degree	108	33.6
Postgraduate	112	34.9
Total	321	100
Geographic location of		
Eastern Cape	11	3.4
Free State	6	1.9
Gauteng	170	53
KwaZulu-Natal	80	24.9
Limpopo	9	2.8
Mpumalanga	7	2.2
Northern Cape	2	0.6
North West	5	1.6
Western Cape	31	9.7
Total	321	100
Imported wine purchase		
Once a week	31	9.7
Monthly	29	9.0
Only on special occasions	145	45.2
Never	116	36.1
Total	321	100

Region/Country of-origin of		
France	102	31.8
Italy	44	13.7
Spain	16	5
United States	7	2.2
Other	152	47.4
Total	321	100

Table 6.1 provides a summary of the demographic and socio profiles of the present study. The table specifically includes age, gender, education level, geographic location, imported wine purchase frequency of the respondents in this study. Lastly, it depicts the country-of-origin of the imported wine brand. The following section presents demographic statistics individually in more detail.

6.5.1 Gender of the Respondents

Figure 6.2: Gender of Respondents

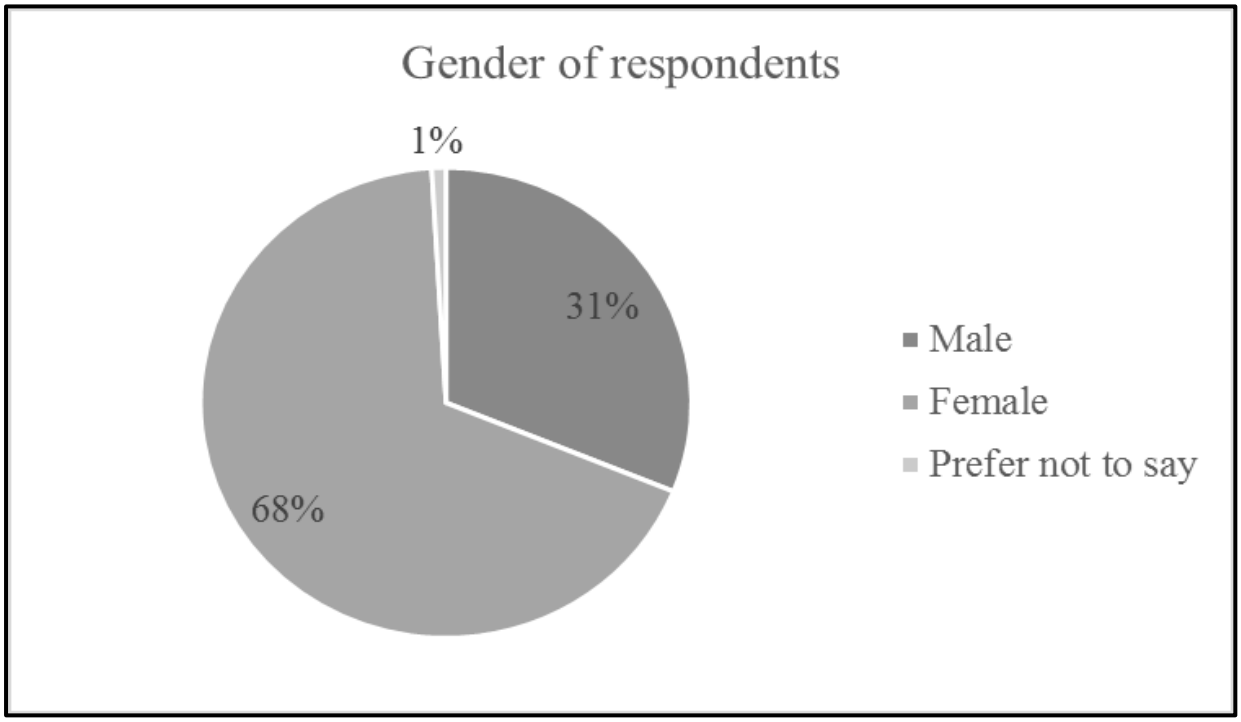

The results in Figure 6.2 indicates that the majority 68% (218) of respondents are female (68%), while 31% (100) are male, and the remaining 1% accounted for those who preferred not to disclose their gender. It is therefore evident that female wine drinkers dominated the research compared to their male counterparts. Based on these results, it can be inferred that

the results of this study are biased towards the views of female wine drinkers in South Africa who dominated the study.

6.5.2 Age of the Respondents

Figure 6.3: Age of the Respondents

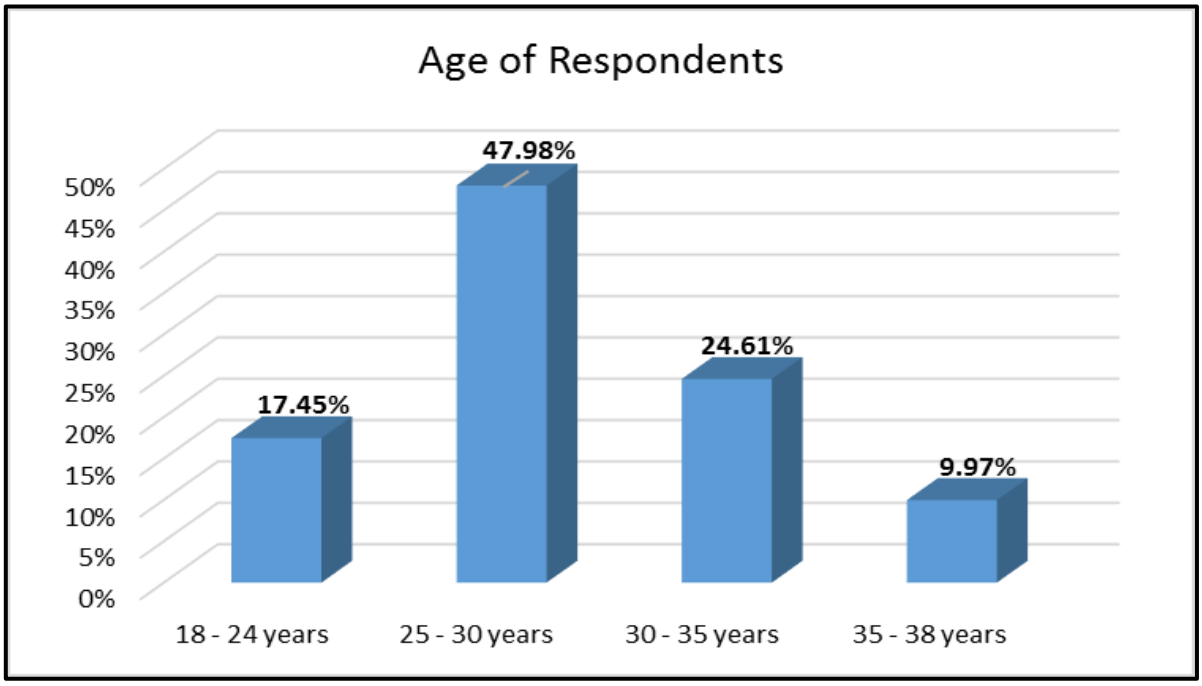

From figure 6.3, it is evident that almost 50% (154) falls within the 25-30 age group. This is followed by 24.61% (79) between the 30-35 age group, then followed by 17% (56) within the 18-24 age group. Subsequently, less than 10% (32) are between the 35-38 age group.

Table 6.2: Educational Level of Respondents

		Frequency	Per cent	Valid Per cent	Cumulative Per cent
Valid	High School	45	14.0	14.0	14.0
	Diploma	56	17.4	17.4	31.5
	Degree	108	33.6	33.6	65.1
	Postgraduate degree	112	34.9	34.9	100.0
	Total	321	100.0	100.0	

As seen in Table 6.2, 34% (112) of the respondents hold 'postgraduate degree' as their highest qualification, while 33.6 % (108) hold a degree, 17.4 % (56) 'diploma' certificates

and lastly, 14 % (45) hold high school certificates as their highest qualifications. This illustrates that the highest number of respondents have postgraduate qualifications.

6.5.3 Geographic Location of Respondents

Figure 6.4: Geographical Location of Respondents

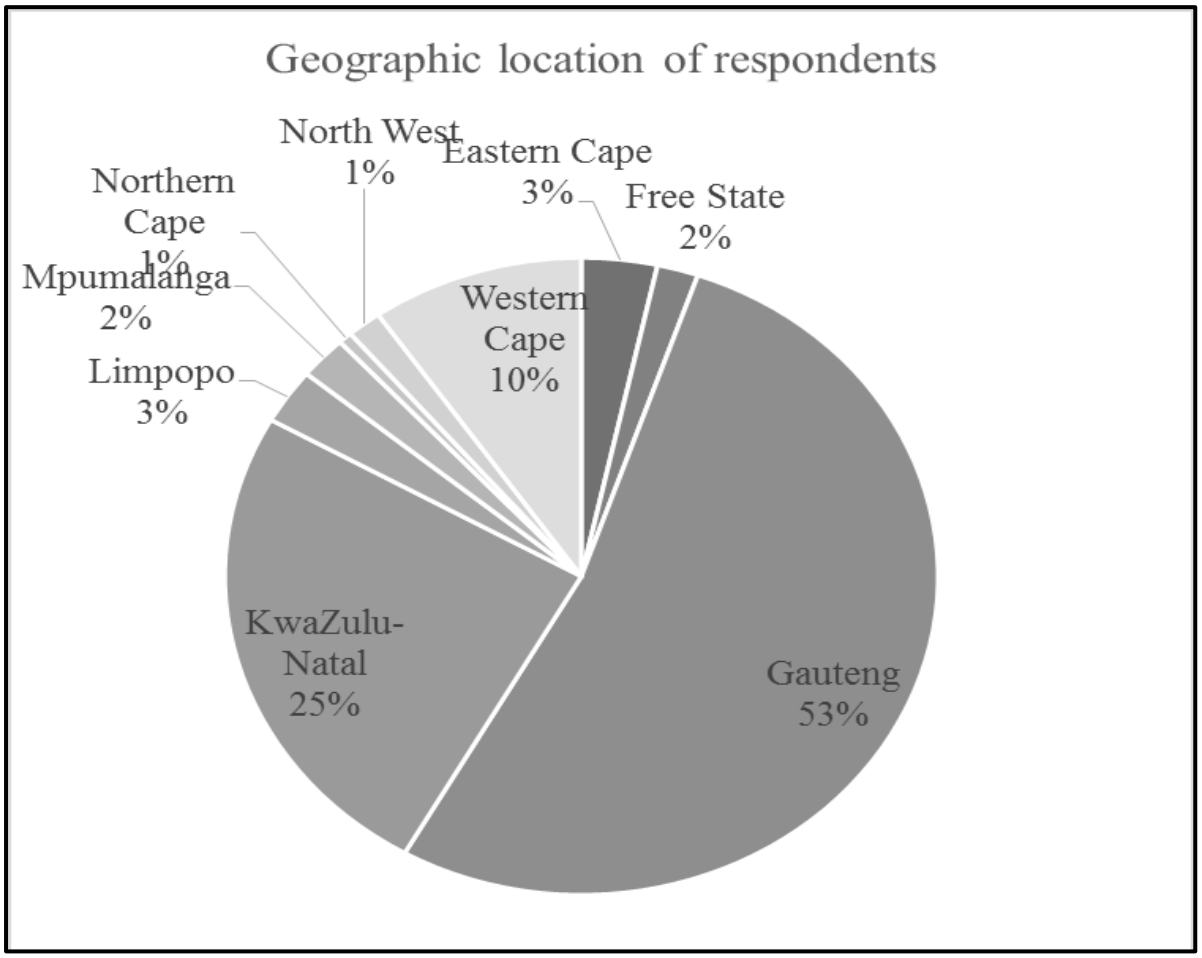

Figure 6.4 illustrates the geographic location of the study's respondents by province. The highest number of respondents was from the Gauteng province with 53% representation. KwaZulu-Natal had the second highest number of respondents with 25 %. The Western Cape Province had the third highest number of respondents with 10% of the respondents. Free State, Eastern Cape, Northern Cape, Mpumalanga and Northern Cape all had less than 5% respondents each in the current study.

Table 6.3: Imported Wine Purchase Frequency

How often do you purchase imported wine?					
		Frequency	**Per cent**	**Valid Per cent**	**Cumulative Per cent**
Valid	Once a week	31	9.7	9.7	9.7
	Monthly	29	9.0	9.0	18.7
	Only on special occasions	145	45.2	45.2	63.9
	Never	116	36.1	36.1	100
	Total	321	100.0	100.0	

Table 6.3 depicts how often respondents or consumers purchase imported wine. The highest (45%) of the respondents purchase imported wine brands on special occasions. This is followed by 36% of the respondents who reported that they never purchase imported wine brands. Furthermore, 10% respondents reported that they purchase imported wine once a week while, 9% of respondents reported that they purchase imported wine monthly. One can observe that South African wine drinkers prefer to consume imported wines to celebrate or mark certain occasions.

Table 6.4: Region/Country of Origin of Preferred Imported Wine Brand

Where does the wine you purchase come from?					
		Frequency	Per cent	Valid Per cent	Cumulative Per cent
Valid	France	102	31.8	31.8	31.8
	Italy	44	13.7	13.7	45.5
	Spain	16	5.0	5.0	50.5
	United States	7	2.2	2.2	52.6
	Other	152	47.4	47.4	100.0
	Total	321	100.0	100.0	

Table 6.4 above shows the various regions or countries where the respondents' wine comes from. The findings show that 47.4 % (152) prefer to purchase wine from 'other' (New world countries), 32 % (102) of the respondents prefer to purchase wines from France, 13% (44) prefer to purchase wine from Italy. In addition, only 5 % of respondents prefer to purchase wine from Spain and 2.2 % prefer wine from the United States.

Table 6.5: Cross Tabulation for Age and Gender

Count						
		Age				
		18-24	**25-30**	**30-35**	**35-39**	**Total**
Gender	**Male**	14	44	31	11	100
	Female	41	109	47	21	218
	Prefer not to say	1	1	1	0	3
	Total	56	154	78	32	321

The results from table 6.5 indicate that 109 of the 218 female respondents were between the ages of 25-30. This is the most dominant age group surveyed and therefore findings of this study reflect the views of mostly females between the ages of 25-30. Males between the ages 25-30 are the second highest represented group in the study.

*Table 6.6: Gender * Education Cross Tabulation*

Count						
		Education				
		High School	**Diploma**	**Degree**	**Postgraduate**	**Total**
	Male	13	11	36	40	100
Gender	**Female**	31	44	71	72	218
	Prefer not to say	1	1	1	0	3
Total		45	56	108	112	321

Table 6.6 illustrates the cross tabulation between gender and education level of the respondents. The results indicate that the majority of the respondents (females) hold degree and postgraduate qualifications as their highest qualification. Similarly, the male respondents for the study predominately hold postgraduate qualifications.

*Table 6.7: Gender * Source Cross Tabulation*

Count							
		Region of Origin of wine and Gender					
		France	**Italy**	**Spain**	**United States**	**Other**	**Total**
Gender	**Male**	36	11	4	2	47	100
	Female	64	33	12	5	104	218
	Prefer not to say	2	0	0	0	1	3
Total		102	44	16	7	152	321

Table 6.7 shows results for wine region-of-origin preference and the gender of the respondents. The results indicated that the majority of males (47) are most likely to purchase wine from other countries than from France, Italy, Spain and the United States. Their second best region of origin is France (36). Findings from the study also reveal that the majority of females are most likely to purchase wine from other countries compared to France, Italy, Spain and the United States.

*Table 6.8: Age * Source Cross Tabulation*

Count							
		Source					
		France	**Italy**	**Spain**	**United States**	**Other**	**Total**
Age	**1**	22	3	2	2	27	56
	2	45	17	9	3	80	154
	3	24	16	2	2	34	78
	4	11	7	3	0	11	32
	6	0	1	0	0	0	1
Total		102	44	16	7	152	321

Table 6.8 shows Region-of-origin purchase preference and the educational background of the respondents. Findings reveal that 56 out of the 108 respondents with a degree as their highest academic qualification prefer wine from 'other' countries. Notably, 50 out of the 112 respondents with postgraduate qualifications prefer to purchase wine from 'other' countries compared to France, Italy, Spain and United States.

*Table 6.9: Age * Purchase Frequency Cross Tabulation*

Count						
		Purchase Frequency				
		Once a week	**Monthly**	**Only on special occasions**	**Never**	**Total**
Age	**18-24**	4	7	29	16	56
	25-30	17	11	71	55	154
	30-35	10	7	35	27	79
	35-39	0	4	10	18	32
Total		31	29	145	116	321

Table 6.9 shows the respondents' imported wine purchase frequency and their age. 71 respondents from the 25-30 age group are reported to most likely purchase imported wine on special occasions. 35 out of the 79 respondents from the 30-35 age group also reported that they purchase imported wine on special occasions. 29 out of the 56 respondents aged between 18-24 reported that they purchase imported wine on special occasions. Based on the findings

above, it is revealed that all age groups surveyed in this study purchase imported wine on special occasions.

6.6 Summary of Likert Scale Results

This section presents a representation of how wine drinkers responded to the questions. These questions were formulated and guided by existing scales on brand tribalism, brand love, brand preference, brand credibility and purchase intention literature. Furthermore, the items scales were then operationalised to suit the current study on imported wine. This section discusses the descriptive statistics of all the variables under study. Hair et al, (2009) point out that the relationship between the mean and the standard deviation is that a small estimated standard deviation (SD) denotes that participants' responses were consistent and that the response distributions lay close to the mean.

6.6.1 Brand Tribalism

The measurement scale of brand tribalism consisted of five measurement instruments which were measured on a five-point scale. The mean value, the standard deviation value and the individual instrument items have all been presented in Table 6.10**.**

Table 6.10: Descriptive analysis for Brand Tribalism

Construct	Item	Mean value	Std Dev	1	2	3	4	5	Total
Brand tribalism	BT1	3.00	1.142	45 14%	45 14%	126 39.3 %	76 23.7%	29 9%	321 100%
	BT2	3.06	1.336	62 19.3%	45 14%	70 21.8%	99 30.8 %	45 14%	321 100%
	BT3	3.35	1.381	43 13.4%	47 14.6 %	80 24.9 %	58 18.1	93 29.0 %	321 100%
	BT4	2.45	1.382	121 37.7%	51 15.9 %	58 18.1 %	64 19.9 %	27 8.4%	321 100%
	BT5	2.44	1.422	130 40.5%	42 13.1%	57 17.8%	61 19%	31 9.7%	321 100%

Source: Author's own

Standard deviation is represented by SD, 1 = Strongly disagree, 2 = Disagree, 3 = Neutral, 4 =Agree, 5 = Strongly agree

The mean values ranged from 2.44 to 3.35 while standard deviation values ranged from 1.142 to 1.422 for the brand tribalism items. The highest mean was for item BT3 which was slightly above 3, showing that the respondents agree that imported wine brands are related to the way they perceive life. The lowest mean was for item BT5 was 2.44 showing that respondents disagree with the statement that they would buy imported wine brands because their friends approve of it. In addition, respondents do not think that they will achieve a sense of belonging by buying the same wine as their friends. Lastly, the mean of the remaining items were predominately on 3.00 which means that respondents were neutral to the questions asked.

6.7 Descriptive Statistics for Brand love

The measurement scale of Brand Love consisted of four measurement instruments which were measured on a five-point scale. The mean value, the standard deviation value and the individual instrument items have all been presented in Table 6.11**.**

Table 6.11: Descriptive Analysis for Brand Love

Construct	Item	Mean value	Std Dev	1	2	3	4	5	Total
Brand Love	BL1	3.04	1.244	55 17.1%	39 12,1%	101 31.5%	89 27.7%	37 11.5%	321 100%
	BL2	2.88	1.311	74 23.1 %	39 12.1%	96 29.9%	76 23.7%	36 11.2%	321 100%
	BL3	2.96	1.270	62 19.3 %	41 12.8%	104 32.4%	76 23.7%	38 11.8%	321 100%
	BL4	2.67	1.324	91 28.3%	46 14.3%	92 28.7%	61 19 %	31 9.7%	321 100%

Standard deviation is represented by SD, 1 = Strongly disagree, 2 = Disagree, 3 = Neutral, 4 =Agree, 5 = Strongly agree

The mean values range from 2.67 to 3.04 while the standard deviation was from 1.244 to 1.324. The overall mean value was closer to 3, while the standard deviation value was 1.51, which showed that respondents took a neutral position with many of the statements on the questions for brand love.

6.8 Descriptive Statistics for Brand Preference

The measurement scale of Brand Preference consisted of four measurement instruments which were measured on a five-point scale. The mean value, the standard deviation value and the individual instrument items have all been presented in Table 6.12**.**

Table 6.12: Descriptive Analysis for Brand Preference

Construct	Item	Mean value	Std Dev	1	2	3	4	5	Total
Brand Preference	BP1	2.42	1.414	126 39.3%	55 17.1%	53 16.5%	53 16.5%	34 10.6%	321 100%
	BP2	2.43	1.326	119 37.1%	47 14.6%	72 22.4%	63 19.6%	20 6.2	321 100%
	BP3	2.48	1.376	117 36.4%	50 15.6%	64 19.9%	62 19.3%	28 8.7%	321 100%
	BP4	3.52	1.280	38 11.8%	27 8.4	68 21.2%	107 33.3	81 25.2	321 100%
	BP5	2.21	1.330	148 46.1%	44 13.7%	61 19%	48 15%	20 6.2%	321 100%

Standard deviation is represented by SD, 1 = Strongly disagree, 2 = Disagree, 3 = Neutral, 4 =Agree, 5 = Strongly agree.

The mean values for brand preference ranged from 2.21 to 3.52 whereas the standard deviation ranged from 1.280 to 1.414. The overall mean value was 2.50, which showed that respondents disagreed with many of the statements or questions on brand preference. For instance, 46 % of the respondents which is almost 50% of the respondents, strongly disagreed with the statement that they are willing to replace their local wine preference with imported wine brands. This could perhaps mean that South African wine drinkers prefer and are more loyal to local wine brands. In addition, almost 40 % strongly disagreed that they believe that imported wine brands are superior to competing local wine brands. This could be attributed by the fact that the respondents drink both imported and local wine brands but they do not find imported wine brand as better than local wine brands.

6.9 Descriptive Statistics for Brand Credibility

The measurement scale of brand credibility consisted of four measurement instruments which were measured on a five-point scale. The mean value, the standard deviation value and the individual instrument items have all been presented in Table 6.13**.**

Table 6.13: Descriptive Analysis for Brand Credibility

Construct	Item	Mean value	Std Dev	1	2	3	4	5	Total
Brand Credibility	BC1	3.08	1.082	33 10.3%	45 14%	136 42.4%	76 23.7%	31 9.7%	321 100%
	BC2	3.02	1.117	41 12.8%	44 13.7%	135 42.1 %	71 22.1%	30 9.3%	321 100%
	BC3	3.07	1.169	50 15.6%	27 8.4%	125 38.9%	88 27.4	31 9.7	321 100%
	BC4	2.80	1.273	71 22.1 %	56 17.4%	87 27.1%	79 24.6%	28 8.7%	321 100%

Standard deviation is represented by SD, 1 = Strongly disagree, 2 = Disagree, 3 = Neutral, 4 =Agree, 5 = Strongly agree.

The mean values range from 2.80 to 3.08, whereas standard deviation ranges from 1.082-1.273. The average mean value is 3 which means that the respondents were neutral to almost all the questions on brand credibility. In addition, 42 % (136) of the respondents were neutral to the statement that asked whether imported wine brands deliver what they promise. Furthermore, 42 % (135) respondents were neutral to the statement that imported wine brands claims are believable. This could perhaps mean that respondents are indifferent, not agreeing or disagreeing with the statements asked.

6.10 Descriptive statistics for Purchase Intention

The measurement scale of Purchase Intention consisted of four measurement instruments which were measured on a five-point scale. The mean value, the standard deviation value and the individual instrument items have all been presented in Table 6.14.

Table 6.14: Descriptive Analysis for Purchase Intention

Construct	Item	Mean value	Std Dev	1	2	3	4	5	Total
Purchase Intention	PI1	2.99	1.267	61 19 %	42 13.1%	92 28.7%	92 28.7	34 10.6%	321 100%
	PI2	2.57	1.300	96 29.9%	57 17.8%	83 25.9%	60 18.7%	25 7.8 %	321 100%
	PI3	2.49	1.282	104 32.4%	54 16.8 %	86 26.8%	56 17.4%	21 6.5%	321 100%
	PI4	3.20	1.379	58 18%	40 12.4%	67 20.8%	92 28.6%	65 20.2 %	321 100%

Standard deviation is represented by SD, 1 = Strongly Disagree, 2 = Disagree, 3 = Neutral, 4 =Agree, 5 = Strongly Agree.

The mean values range from 2.49 to 3.20 for Purchase intention. The standard deviation is 1.267 to 1.379. 28, 7 % which is almost 29 % agree with the statement that they intend to buy imported wine brands. In addition, 28, 6 % which is almost 29%, agree that if given the right financial position, respondents are willing to purchase imported wine brands. Furthermore, 26.8 % of the respondents gave a neutral response to that they actively watch imported wine brands.

6.11 Assessment of normality

Table 6.15: Assessment of Normality

Variable	min	max	skew	c.r.	kurtosis	c.r.
PI1	1	5	-0.226	-1.651	-0.999	-3.655
P12	1	5	0.233	1.705	-1.116	-4.081
BC1	1	5	-0.197	-1.441	-0.358	-1.308
BC2	1	5	-0.179	-1.31	-0.468	-1.711
BC3	1	5	-0.363	-2.653	-0.566	-2.069
BP1	1	5	0.484	3.538	-1.155	-4.224
BP2	1	5	0.322	2.354	-1.217	-4.452
BP3	1	5	0.342	2.501	-1.23	-4.5
BL1	1	5	-0.258	-1.888	-0.878	-3.212
BL2	1	5	-0.091	-0.669	-1.098	-4.015
BL3	1	5	-0.144	-1.052	-0.958	-3.505
BL4	1	5	0.13	0.952	-1.14	-4.169
BT1	1	5	-0.196	-1.433	-0.593	-2.169
BT2	1	5	-0.248	-1.814	-1.138	-4.161
BT4	1	5	0.384	2.806	-1.232	-4.507
BT5	1	5	0.398	2.908	-1.271	-4.65
Multivariate					35.042	13.08

Normality is the indication of the distribution of the sample that correlates with a normal distribution (Aryani, 2009). Normality is one of the fundamental assumptions associated with multivariate analysis. Studies reveal that when all the variables in a study attain univariate normality, then it shows a satisfactory certainty for a multivariate normality (Hair et al., 2010). For the purposes of this study, normality of the data was assessed using measures of skewness and kurtosis values of a normal distribution. According to Kline (2011), a skeweness value which is higher than 3 is considered as extreme, while a kurtosis value which is greater than 8 is described as extreme. Should the satisfactory level of skewness 3 and the kurtosis 8 be violated, this implies that there is a problem that needs to be addressed prior to embarking on any inferential analysis. In the present study, the result demonstrates

that the maximum value for skewness was 0.484 and the maximum value for kurtosis was -1.116. It is evident that, the skewness values were lower than the satisfactory level 3, while kurtosis values were also lower than the satisfactory level 8; which therefore means that there was normality in each of the indicator variables employed in the current study.

6.12 Measurement Instrument Assessment (Confirmatory Factor Analysis)

Initially, a confirmatory factor analysis (CFA) was carried out to ascertain the validity of the measurement model for both discriminant and convergent validity of each construct in the model, which was again used to determine the model fit. The research constructs measured in this study are brand tribalism, brand love, brand credibility, brand preference and purchase intention. In this section, the reliability and validity of the measurement instrument are presented and discussed.

6.13 Testing for Reliability

In this study, Cronbach's coefficient alpha, composite reliability (CR) and Average shared variance AVE were used to evaluate the measurement scale to verify the internal consistency so as to evaluate the reliability of the measurements. Hair et al. (2009) posit that values greater than 0.7 are said to be reliable. The reliability of the instrument was tested using Cronbach alpha and composite reliability and Average variance extracted (AVE). Overall, all Cronbach values exceeded the recommended threshold of 0.6 which means that the measures used in the study are reliable. The highest Cronbach value is for brand love which is 0.931 whereas the lowest is 0.719 for purchase intention.

6.13.1 Cronbach Alpha

Table 6.16: Brand Tribalism

Cronbach's Alpha	Cronbach's Alpha Based on Standardised Items	N of Items
0.747	0.748	4

The Cronbach Alpha for brand tribalism has a value of 0.747. This value is greater than 0.6 which authenticates that the measurement instruments are valid (Hair et al., 2009).

Table 6.17: Brand Love

Cronbach's Alpha	Cronbach's Alpha Based on Standardised Items	N of Items
0.931	0.931	4

Table 6.17 illustrates the Cronbach Alpha for brand love. The Cronbach alpha for brand love is .931 which is greater than 0.6 which means the measurement instrument used to measure brand love is reliable (Hair et al., 2009).

Table 6.18: Brand Preference

Cronbach's Alpha	Cronbach's Alpha Based on Standardised Items	N of Items
0.870	0.871	3

Table 6.18 shows the Cronbach Alpha for brand preference. The Cronbach alpha for brand preference is 0.870 which is greater than the recommended threshold of 0.6 as suggested by Hair et al. (2009). This implies that the measurement scales are highly reliable.

Table 6.19: Brand Credibility

Cronbach's Alpha	Cronbach's Alpha Based on Standardised Items	N of Items
0.878	0.879	3

Table 6.19 illustrates the scales used to test brand credibility. The Cronbach alpha is 0.878 which shows that the scales are highly reliable as they are higher than the recommended threshold of 0.6 suggested in literature (Hair et al., 2010).

Table 6.20: Purchase Intention

Cronbach's Alpha	Cronbach's Alpha Based on Standardised Items	N of Items
0.719	0.720	2

Table 6.20 above shows the Cronbach Alpha used to measure Purchase Intention. The Cronbach alpha value is 0.719 which implies that the scales to measure purchase intention are highly reliable.

6.13.2 Composite Reliability CR

According to Hair et al. (2009), a Composite reliability index greater than 0.7 is considered acceptable. There are a number of ways to calculate Composite reliability such as Amos and

using the validity tool calculator. For the purposes of this study, a validity calculator was used to calculate the Composite Reliability and the Average variance extracted. However, there is also a formula for calculating Composite reliability which is as follows;

Composite Reliability = (square of the summation of the factor loadings)/ {(square of the summation of the factor loadings) + (summation of error variances)}.

In the current study, the lowest composite reliability value (CR) was for Purchase Intention with a value of 0.720 and the highest composite reliability value was for Brand love which was 0.933. In addition, other research constructs reported the following composite reliability Brand tribalism; 0.745, Brand Preference; 0.875, Brand Credibility; 0.881. The reliability and validity of each constructs is presented in tables in the succeeding section.

Table 6.21: Reliability and Validity of Brand Tribalism

Research Construct		Descriptive Statistics				Cronbach's Test		C.R. Value	AVE Value	Highest Shared Variance	Factor Loading
		Mean Value		Standard Deviation		Item-total	a value				
BT	BT1	3.003	2.742	1.142	1.320	0.520	0.747	0.745	0.426	0.195	0.736
	BT2	3.069		1.336		0.500					0.605
	BT4	2.450		1.382		0.522					0.527
	BT5	2.447		1.422		0.655					0.721

Table 6.21 depicts the reliability and validity of Brand tribalism. The individual item loadings are 0.736, 0.605 0.527 and 0.721, all exceeding the postulated 0.5 threshold (Anderson and Gerbing, 1988). One item (BT3) was deleted because its factor loadings was lower than 0.5, which is the threshold recommended (Pallant, 2013). Composite reliabilities (CR) and average variance extracted (AVE) for each construct were also computed using the formula proposed by Fornell and Lacker (1981). The composite reliability (CR) is 0.745 which exceeds the recommended value of 0.7 suggested by Hulland (1999). These results thus therefore indicate acceptable internal consistency and reliability of the brand love measure. Furthermore, discriminant validity was examined by checking if the AVE value was greater than the highest shared variance (S.V.) value of 0.4 (Fornell and Larcker 1981). In addition, the table shows average variance extracted (AVE) is 0.426 which is higher than the recommended threshold of 0.3 endorsed by Hair et al. (2006). In addition to this, the highest

shared variance is 0.195. Composite reliability is 0.745 for the brand tribalism construct which is above the recommended threshold.

Table 6.22: Validity and Reliability of Brand Love

Research Construct		Descriptive Statistics				Cronbach's Test		C.R. Value	AVE Value	Highest Shared Variance	Factor Loading
		Mean Value		Standard Deviation		Item-total	a value				
BL	BL1	3.04	2.889	0.824	0.838	0.824	0.931	0.933	0.776	0.287	0.868
	BL2	2.88		0.875		0.875					0.924
	BL3	2.96		0.874		0.874					0.913
	BL4	2.67		0.780		0.780					0.815

Table 6.22 depicts the reliability and validity of Brand love. The individual item loadings are 0.868, 0.924 0.913 and 0.815, all exceeding the postulated 0.5 threshold (Anderson and Gerbing, 1988). Composite reliabilities (CR) and average variance extracted (AVE) for each construct were also computed using the formula proposed by Fornell and Lacker (1981). The composite reliability (CR) is 0.933 which exceeds the recommended value of 0.7 suggested by Hulland (1999). These results thus indicate acceptable internal consistency and reliability of the brand love measure. Furthermore, discriminant validity was examined by checking if the AVE value was greater than the highest shared variance (S.V.) value or 0.4 value (Fornell and Larcker 1981). In addition, the table shows average variance extracted (AVE) is 0.776 which is above the 0.3 endorsed by Hair et al. (2006). In addition to this, the highest shared variance is 0.287.

Table 6.23: Validity and Reliability of Brand Preference

Research Construct		Descriptive Statistics				Cronbach's Test		C.R. Value	AVE Value	Highest Shared Variance	Factor Loading
		Mean Value		Standard Deviation		Item-total	a value				
BP	BP1	2.421	2.713	1.414	1.349	0.697	0.870	0.875	0.700	0.287	0.797
	BP2	2.433		1.326		0.784					0.899
	BP3	2.483		1.376		0.700					0.811

Table 6.23 depicts the reliability and validity of Brand preference. The individual item loadings are 0.797, 0.899 and 0.811, all exceeding the proposed 0.5 threshold (Anderson and Gerbing, 1988). This indicates acceptable individual item reliabilities as greater than 0.5; two

items that reported factor loading less than 0.5 were deleted as advised by Pallant (2013). Composite reliabilities (CR) and average variance extracted (AVE) for each construct were also computed using the formula proposed by Fornell and Lacker (1981). The composite reliability (CR) is 0.875 which exceeds the recommended value of 0.7 posited by Hulland (1999). These results thus indicate acceptable internal consistency and reliability of the brand preference measure. Discriminant validity was examined by checking if the AVE value was greater than the highest shared variance (S.V.) value or 0.4 value (Fornell and Larcker 1981).

Table 6.24: Validity and Reliability for Brand Credibility

Research Construct		Descriptive Statistics			Cronbach's Test		C.R. Value	AVE Value	Highest Shared Variance	Factor Loading
		Mean Value		Standard Deviation	Item-total	a value				
BC	BC1	3.08	3.05	1.082	0.698	0.878	0.881	0.712	0.089	0.788
	BC2	3.02		1.117	0.743					0.893
	BC3	3.07		1.169	0.755					0.848

Table 6.24 illustrates the reliability and validity of Brand Credibility. The individual item loadings are 0.788, 0.893 and 0.848, all above the recommended 0.5 (Anderson and Gerbing, 1988). This indicates acceptable individual item reliabilities as greater than 0.5. One item that reported factor loading less than 0.5 was deleted as advised by Pallant (2013). Composite reliabilities (CR) and average variance extracted (AVE) for each construct were also computed using the formula proposed by Fornell and Lacker (1981). The composite reliability (CR) is 0.881 which exceeds the recommended value of 0.7 stated by Hulland (1999). These results thus indicate acceptable internal consistency and reliability of the brand credibility measure. Discriminant validity was examined by checking if the AVE value was greater than the highest shared variance (S.V.) value or 0.4 value (Fornell and Larcker 1981).

Table 6.25: Validity and Reliability for Purchase Intention

Research Construct		Descriptive Statistics			Cronbach's Test		C.R. Value	AVE Value	Highest Shared Variance	Factor Loading
		Mean Value		Standard Deviation	Item-total	a value				
PI	PI1	2.99	2.713	1.267	0.500	0.719	0.720	0.563	0.089	0.769
	PI2	2.57		1.300	0.552					.0731

Table 6.25 depicts the reliability and validity of purchase intention. The individual item loadings are 0.769, and 0.731, both exceed the recommended 0.5 (Anderson and Gerbing, 1988). This shows acceptable individual item reliabilities as greater than 0.5. Two items that reported factor loadings less than 0.5 were deleted as advised by Pallant (2013). Composite reliabilities (CR) and average variance extracted (AVE) for each construct were also computed using the formula proposed by Fornell and Lacker (1981). The composite reliability (CR) is 0.720 which exceeds the recommended value of 0.7 stated by Hulland (1999). These results thus indicate satisfactory internal consistency and reliability of the purchase intention measure. Discriminant validity was examined by checking if the AVE value was greater than the highest shared variance (S.V.) value or 0.4 value (Fornell and Larcker 1981).

6.14 Testing for Validity

The present study adopted the following measures; Correlation matrix, Factor loadings, Average variance extracted and Shared Value (SV) in order to test the validity of the instrument. Both convergent and discriminant were used in the measurement of validity. In addition, this section presents all the measures for validity and whether or not they meet the recommended criterion suggested in literature.

6.14.1 Convergent Validity

Sarstedt, Ringle, Smith, Reams and Hair (2014) state that convergent validity determines the degree to which a construct converges in its indicators by giving explanation of the items' variance. Essentially, convergent validity is assessed by checking item-total correlations and factor loadings (Nusair et al., 2010; Sarstedt et al., 2014). Furthermore, scholars argue that a weaker convergent validity is demonstrated by values further away from one whereas values closer to one are deemed acceptable (Carlsman and Herdman, 2012). The estimates of the factor loadings greater than 0.5 are presented in Table 6.26, demonstrating convergent validity. The lowest factor loading was 0,605, representing brand tribalism which was (BT2) whereas 0,924 was the highest and represented Brand Love which was (BL2).

6.14.2 The Item-Total Correlation

Table 6.26: The Item-Total Correlation

Research Construct		Factor Loading	Item-to Total
BT	BT1	0.736	0.520
	BT2	0.605	0.500
	BT4	0.780	0.522
	BT5	0.721	0.655
BL	BL1	0.868	0.824
	BL2	0.924	0.875
	BL3	0.913	0.874
	BL4	0.815	0.780
BP	BP1	0.797	0.697
	BP2	0.899	0.784
	BP3	0.811	0.700
BC	BC1	0.788	0.698
	BC2	0.893	0.743
	BC3	0.848	0.755
PI1	PI1	0.769	0.500
	PI2	0.731	0.552

First and foremost, any values less than 0.5 were deleted before statistical analysis was conducted for the present study. The values for the individual items ranged from 0.500 to 0.875. The highest was (BL2: 0875) while the lowest Item-total correlation was Brand tribalism and Purchase intention and (BT2; 0.500 PI; 0.500). Therefore, this authenticates the convergent validity of the items that were used for the study. In addition, composite reliability was above 0.6 which is the recommended threshold, further confirming the presence of convergent validity.

6.15 Discriminant validity

Hair, Hult, Ringle and Sarstedt (2014) assert that when determining if there is discriminant validity or not, a researcher must identify whether the observed variable displays a higher loading on its own construct than on any other construct included in the structural model. Furthermore, studies recommend that in order to determine whether there is discriminant validity, one has to assess if the correlation between the research variables is less than 1.0 (Chinomona, 2011). As indicated in Table 6.15.1 below, the inter-correlation values for all paired latent variables are less than 1.0 hence confirming the existence of discriminant validity. Therefore, findings from the

present study proved that there is discriminant validity. The results from the correlation matrix are presented in Table 6.27.

Table 6.27: Correlation Matrix

	BT	BL	BP	BC	PI
BT	1				
BL	0.661	1			
BP	0.665	0.732	1		
BC	0.167	0.164	0.193	1	
PI	0.082	0.098	0.159	0.546	1

****. Correlation is significant at the 0.01 level (2-tailed).**

The findings depicted in Table 6.27 indicate that all the inter-correlation values are less than 0.08, authenticating the presence of discriminant validity. Firstly, one correlation indicates lower levels of discriminant validity (BL and BP) at 0.732, nevertheless it is accepted due to the fact that it is less than the recommended 0.08 threshold. Secondly, after a thorough observation of the correlations in Table 6.27, the highest distinction between two constructs is depicted by the lowest values, weak linear relationship between brand tribalism and purchase intention (0.082). This indicates a weak linear relationship and most importantly, that the research constructs are very different from each other. Thus, it can be concluded that there is the presence of discriminant validity.

Studies advocate that apart from the analysis of the inter-correlation values, discriminant validity can be further examined by assessing whether the AVE value is greater than the highest shared variance (SV) (Nusair and Hua, 2010; Fornell and Lacker, 1981). The average variance extracted (AVE) estimate reflects the overall amount of variance in the indicators accounted for by the latent construct (Chinomona, 2011). Fraering and Minor (2006) posit that an AVE value of 0.4 is deemed as satisfactory. On the contrary, other scholars argued that a threshold value of 0.30 qualifies to be used as a minimum threshold in social sciences, while in marketing an accepted threshold of 0.5 was comparatively acceptable (Hair et al., 2006). The present study reports the following 0.426, 0776, 0.700, 0.712, 0.563 which are consistent thresholds proposed by Fraering and Minor (2006). The Average Variance Extracted is examined using the following formula:

Vη=Σλyi2/ (Σλyi2+Σεi) AVE = summation of the squared of factor loadings/ {(summation of the squared of factor loadings) +(summation of error variances)}. However, in this present study, AVE was calculated using a validity calculator. Table 6.28 below presents the shared variance values.

Table 6.28: Highest Shared Variance (SV) and Average variance Extracted (AVE)

Highest shared variance					
	Squaring correlations; highest construct value on vertical				
	BT	**BL**	**BP**	**BC**	**PI**
BT	1				
BL	0.437	1			
BP	0.442	0.536	1		
BC	0.028	0.027	0.037	1	
PI	0.007	0.010	0.025	0.298	1

****. Correlation is significant at the 0.01 level (2-tailed).**

As indicated in Table 6.28, all average variance extracted (AVE) values are greater than the shared values (SV) for all the research variables (Brand tribalism, Brand love, Brand preference, Brand Credibility and Purchase Intention) hence confirming discriminate validity.

Table 6.29: Average Variance Extracted and Highest Shared Variance

Research Construct		AVE Value	Highest Shared Variance
BT	BT1 BT2 BT4 BT5	0.426	0.195
BL	BL1 BL2 BL3 BL4	0.776	0.287
BP	BP1 BP2 BP3	0.700	0.287
BC	BC1 BC2 BC3	0.712	0.089
PI	PI1 PI2	0.563	0.089

Table 6.29 above shows Highest shared correlation values, Highest shared variance and Average Variance extracted (AVE). All average variance extracted (AVE) values were above 0.4 and most approached or were above 0.7, thus exceeding acceptable criteria set in literature (Fraering and Minor, 2006). Therefore, these findings provided evidence for marginal to acceptable levels of reliability of the research instrument.

6.16 Confirmatory Factor Analysis (Measurement Model)

For the purposes of this research, a two-stage approach in structural equation modelling (SEM) was employed as premised in past literature (Anderson and Gerbing, 1988). Initially, a confirmatory factor analysis (CFA) was carried out to determine the validity of the measurement model in terms of discriminant and convergent validity of each construct in the model, which was further used to determine the model fit.

6.17 Model fit Indices (CFA)

The present section sets out to present the analysis of the study's model fit which are divided into three, namely, the absolute fit indices, incremental fit indices as well as the parsimony fit indices (Hair et al., 2010). Specifically, the indices studied are: CMIN or the Chi-square (x2/df), the Normed Fit Index (NFI), the Goodness-Of-Fit Index (GFI), the Root Mean Square Error of Approximation (RMSEA), the Tucker Lewis Index (TLI), the Comparative Fit index (CFI) and lastly Incremental Fit Index (IFI). Table 6.30 provides a summary.

Table 6.30: Criteria for Model Fit, Description and Acceptance Levels

Model Fit Criteria	Description	Acceptance Level	Source
Chi-square((χ2 /DF)	This is a method used to assess the general fit of the model	Value must be below 3	Chen and Lin (2010), Chinomona (2011)
Normed Fit Index (NFI)	Index that evaluates the model by comparing the x2 value of the model to the x2 of the null model	Value must be greater than 0.9	Hooper, Coughlan and Mullen (2008), Bentler and Bonnet (1980)
Tucker-Lewis Index (TLI)	Index that prefers simpler models and is known to address the issue of sample size	Value must meet or exceed 0.9	Hooper *et al.* (2008:55)
Incremental Fit Index (IFI)	Index developed to rectify the issue of parsimony and sample size related to NFI	Value must meet or exceed 0.9	Bollen (1989), Chinomona (2011)
Comparative Fit Index (CFI)	Index that presupposes that all latent variables are uncorrelated and compares the sample covariance matrix with the null model	Value must meet or exceed 0.9	Hu and Bentler (1999), Hooper et al., (2008)
Root Mean Square Error of Approximation (RMSEA)	Index that informs how well th model, with indefinite bu optimally selected paramete estimates would fit th populations covariance matrix	Value must fall below 0.05 and 0.08	Byrne (1998) Brown and Cudeck (1993), Curran and Hussong (2002)

Table 6.31: Chi-square (χ2 /DF)

Model	NPAR	CMIN	DF	P	CMIN/DF
Default model	42	241.887	94	0	2.573
Saturated model	136	0	0		
Independence model	16	3304.243	120	0	27.535

The model fit was tested for confirmatory factor analysis using a chi-square test (Chen et al., 2010). Chinomona (2011) posited that a chi-square value over degree of freedom of value that is less < 3 indicates an acceptable model fit. As seen in Table 6.31, the CMIN/DF value of 2.573 was considered as an acceptable fit for the model. The value is consistent and is within the recommended range advised for a good model fit of chi-square value to be less than five or < 5 (Hair et al., 2010: Shumacker and Lomax, 2004). Therefore, this means that this model is fit for this present study. Most importantly, the description provided in the model fit assessment in CFA and the recommended thresholds stipulated, apply here as well.

In Table 6.32 below, the indicator value (2.573) for the chi-square over degree of freedom falls below the recommended threshold, that is 3. This therefore means that this result signifies acceptable model fit.

Table 6.32: Baseline comparison Index

Model	NFI	RFI	IFI	TLI	CFI
	Delta1	rho1	Delta2	rho2	
Default model	0.927	0.907	0.954	0.941	0.954
Saturated model	1		1		1
Independence model	0	0	0	0	0

6.17.1 Summary of Model Fit Indices for CFA.

Table 6.33: Summary of Model Fit Indices for Measurement Model

Model Fit indices	Acceptable threshold	Present study's threshold	Accepted/ Unaccepted
Chi-Square Value:χ2/(df)	<3	2.573	Accepted
Comparative Fit Index (CFI)	>0.900	0.954	Accepted
Incremental Fit Index (IFI)	>0.900	0.954	Accepted
Normed Fit Index (NFI)	>0.900	0.927	Accepted
Tucker Lewis Index (TLI)	>0.900	0.941	Accepted
Random Measure of Standard Error Approximation (RMSEA)	<0.08	0.07	Accepted

Given that all six goodness-of-fit indices in table 6.33 above are meeting the stipulated threshold, it can be concluded that the data were perfectly fitting for the model.

6.18 Structural Model Testing

The previous section discussed the model fit for Confirmatory factor analysis. The current section presents the structural model testing which is recommended as the second procedure in Structural Equation Modelling (Chen et al., 2011). Firstly, some of the items in the construct scales were deleted so as to provide acceptable fit and scale accuracy. Structural model testing is conducted in order to evaluate the causal relationships among latent variables (Nusair et al., 2010). In addition, this procedure entails multiple regression analysis and path

analysis and models the relationship among latent variable (Chen et al., 2011). Figure 6.17.1 to follow in the subsequent sections is a representation of the path model. Similar to the Confirmatory factor analysis model (CFA), the ovals denote the latent variables while the rectangles denote the observed variables. The unidirectional arrow represents the influence of one variable on another. Finally, the model fit assessment is discussed in the succeeding section.

Table 6.34: Model fit results (Structural model)

Model fit criteria	Chi-square (X^2/DF)	GFI	CFI	TLI	IFI	RFI	NFI	RMSEA
Indicator value	2.543	0.909	0.953	0.942	0.954	0.908	0.926	0.069

Note: (χ2 /DF) = Chi-square/degrees of freedom**,** NFI= Normed Fit Index, TLI= Tucker-Lewis Index, FI= Incremental Fit Index, CFI= Comparative Fit Index, RMSEA= Root Mean Square Error of Approximation.

Table 6.34 above illustrates goodness-of-fit values derived through carrying out structural model testing. First and foremost, the description(s) provided in the model fit assessment in CFA and the recommended threshold stipulated are also applicable to structural model testing. In the Table below, the indicator value (2.543) for the chi-square over degree of freedom is below the recommended threshold that is 3. This confirms an acceptable model fit. The goodness-of-fit indices indicate values of NFI (0.926), TLI (0.942), IFI (0.954) and CFI (0.953) which are above the recommended threshold of ≥0.9. These results are therefore an indication of acceptable model fit. Furthermore, studies stipulate that a RMSEA value that falls below 0.05 and 0.08 is an indication of good model fit (Hooper, Coughlan and Mullen, 2008). As evident in the findings on table 6.17.1 the RMSEA value is (0.069) and confirms the existence of a good model since it is less than the stipulated threshold. In conclusion, given that all six goodness-of-fit indices provided in Table 6.34.1 are meeting their respective recommended threshold here, it can be concluded that the data are fitting the model.

6.19 Path Modelling and Hypotheses testing

This following section provides an outline of the results of the hypotheses tested and the correlation path coefficients respectively. In addition, a presentation of supported and rejected hypotheses is provided. This section begins with a graphical representation of the path coefficients and t-values of the conceptual (research) model, this is then followed by a table that provides the hypotheses, their p-values, and whether or not they are supported, and

finally presents a diagrammatic representation of the strengths of the paths. The path coefficients demonstrate the strength of the relationships between the dependent and the independent variables (Hsu, 2008).

Upon assessing the probability value also referred to as the p - value, it was demonstrated that three out of the eight hypotheses postulated were at a significance level of 0.01 which are indicated with asterisks (***) as illustrated in table 6.17.1. The threshold this study uses for a two tailed test with a significance of 5% (0.05) is a t-value of 1.96 recommended by Hair et al. (2011). The thresholds for this study are $p<0.05$, $p<0.01$ and $p<0.001$ which are deemed accurate indicators of relationship significance and that also positive factor loadings indicate strong relationships among latent variables (Chinomona, Lin, Wang and Cheng, 2010). Table 6.18.1 shows the path coefficients and the p-values for each hypothesis relationships proposed for the present research.

Table 6.35: Hypotheses results and Coefficients

Hypothesised Relationship	Hypothesis	Path Coefficient	P Value	Outcome
BT→BL	H1	0.818	***	Supported and significant
BT→BP	H2	0.596	***	Supported and significant
BT →BC	H3	0.177	0.007	Supported and insignificant
BL → BP	H4	0.260	0.013	Supported but insignificant
BP→ PI	H5	0.132	0.188	Supported and insignificant
BC→ BP	H6	0.012	0.783	Supported and significant
BC→PI	H7	0.644	***	Supported and significant
BL→PI	H8	-.121	0.214	Not supported and insignificant

The findings from the current study are shown in Table 6.35. Out of the eight hypotheses proposed in this study, seven hypotheses are supported and one is rejected. Brand tribalism and brand love (H1) presented the strongest relationship (0.818; $p<0.05$). The weakest relationship is evident between brand love and purchase intention relationship (-0.121; p value = .214). The significance level for the relationship brand love-purchase intention is more than the threshold at 95% confidence level (0.214), hence it is insignificant. Brand tribalism and brand credibility relationship is supported and significant (.177; $p<0.05$). In this

study, brand tribalism and brand preference relationship (H3) is supported and significant (.596; p<0.05). Brand credibility and brand preference relationship (H4) is supported but not significant (0.012; p<0.05). Brand love and brand preference (H5) is supported and insignificant (0.260; p, 0.05), recommended level of significance (<0.05). Hypothesis 8 is rejected (-.121; p<0.05). The p value is for H8 is 0.214 greater than 0.05, hence it is not significant. The path coefficient H8 is not supported (-.121). Therefore hypothesis 8 is rejected. In this study, it was observed that brand tribalism has the strongest relationship with brand love (0.818; p<0.05), followed by brand credibility and purchase intention at relationship at (0.644).

To conclude, the results support seven out of the eight proposed hypotheses with brand tribalism and brand love indicating the strongest relationship, while brand love on purchase intention having the weakest relationship. Derived from the findings presented above, Figure 6.4 illustrates the conceptual model for the study.

6.20 Structural Model (Conceptual Model)

Figure 6.4: Structural Model

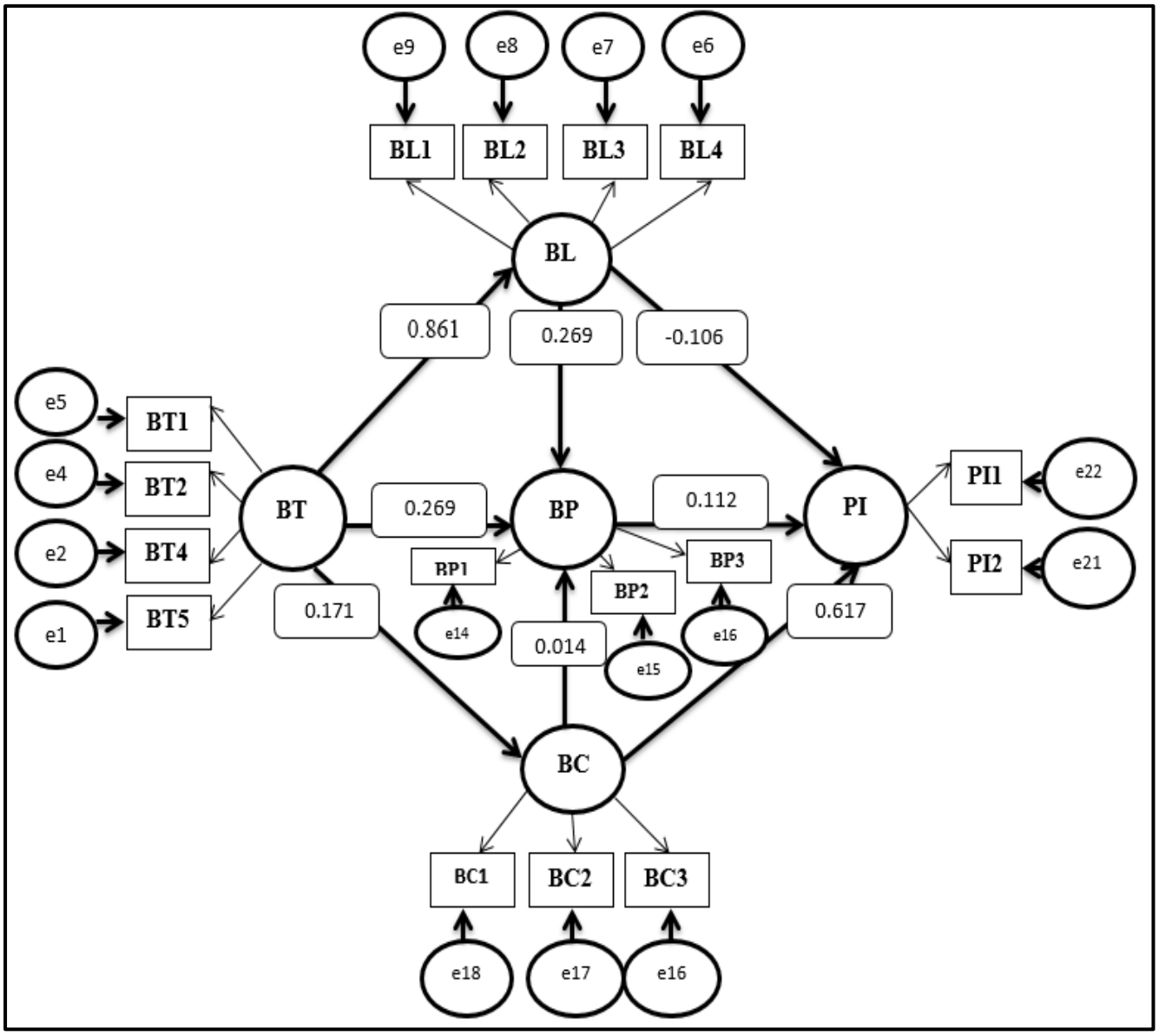

Source: Compiled by the Researcher (2016)

6.21 Summary of hypotheses results

6.21.1 H1: There is a positive relationship Brand Tribalism and Brand Love.

From the results, it is evident that the first hypothesis (H1) is supported. This illustrates that a positive relationship exists between these two constructs. This is to say, brand tribalism has a positive influence on brand love. This therefore means that the more consumers identify and belong to a particular brand tribe, the more likely they are to develop brand love towards

specific brands. Based on the results presented in table 6.18.1, the path coefficient (0.818) revealed a positive and strong relationship between these brand tribalism and brand love research constructs.

6.21.2 H2: There is a positive relationship between Brand Tribalism and Brand Preference

From the findings in table 6.18.1 above, it is clear that (H2) is supported. Based on the results presented in table 6.18.1 the path coefficient (0.596) revealed a positive and significant relationship. This suggests that there is a positive and significant relationship between brand tribalism and brand preference.

6.21.3 H3: There is a positive relationship between Brand Tribalism and Brand **Credibility.**

Hypothesis three proposed a positive relationship between brand tribalism and brand credibility. The results from the current study demonstrate that there is a positive yet insignificant relationship between brand tribalism and brand credibility. The strength of the relationship is (0.007). Based on the study findings, it can be concluded that brand tribalism has a weak relationship with brand credibility. Therefore, there is no relationship between brand tribalism and brand credibility.

6.21.4 H4: There is a positive relationship between Brand Credibility and Brand Preference

From the findings in table 6.18.1 above, it is clear that (H4) is supported. Based on the results presented in table 6.18.1 the path coefficient (0.012) revealed a positive insignificant relationship between brand credibility and brand preference research constructs. This suggests that brand credibility has no influence on brand preference.

6.21.5 H5: There is a positive relationship between Brand Love and Brand Preference

The fifth hypothesis proposed a positive relationship between brand love and brand preference. The findings from the present study demonstrate that there is a positive yet insignificant relationship between brand love and brand preference. The strength of the

relationship is represented by (0.260), therefore confirmed to be insignificant relationship. Therefore, there is no relationship between brand love and brand preference

6.21.6 H6: There is a positive relationship between Brand Preference and Purchase Intention

The sixth hypothesis proposed a positive relationship between brand preference and purchase intention. The findings derived from testing of H6 confirmed the presence of a relationship between brand preference and purchase intention. However, upon examination of the tested hypothesis, a coefficient of (0.132) was found, which is insignificant. This denotes that brand preference has a weak influence on purchase Intention. Based on the results above, there is no relationship between brand preference and purchase intention.

6.21.7 H7: There is a positive relationship between Brand credibility and Purchase intention

This was the second strongest relationship in the conceptual model. The results obtained from testing of H7 authenticated the presence of a relationship between brand credibility and purchase intention. Following the test of H7, a coefficient of (0.644) was found. This demonstrates that brand credibility has a positive and very strong influence on purchase intention. Based on the abovementioned findings, it can therefore be construed that the higher the credibility of the imported wine brands the more likely South African consumers will purchase it. Therefore, the current study findings confirm the hypothesised relationship.

6.21.8 H8: There is a negative relationship between Brand Love and Purchase Intention

Hypothesis eight (H8) proposed that brand love has a relationship with purchase intention of imported wine brands in South Africa. The relationship between Brand love and Purchase intention was found to be the weakest relationship in the present study. The findings show that Brand love has a negative relationship with Purchase Intention. Findings from the present study illustrate there is a negative relationship between brand love and purchase intention, thus the proposed hypothesis is rejected and statistically insignificant (-1.21). Therefore H8 is not supported and insignificant. Hence, it was rejected for this study.

6.22 Chapter Summary

The current chapter began by providing a presentation of the demographic profile of the respondents used for the study. The main focus was gender, age, educational background, geographic location, wine purchase frequency and the Region-of-Origin from where the wine is purchased by the South African wine drinkers. The second part of the analysis addresses the descriptive statistics of the individual variables and was discussed with their respective mean and standard deviation values. Thereafter, a cross tabulation of demographics such as age, gender, region of origin and education level results were presented. This was done to highlight peculiar dynamics between the findings of the study.

Subsequently, the instrument was tested for reliability using various formulae (Cronbach Alpha, Average Variance extracted and Composite reliability). Furthermore, validity was assessed through the convergent and discriminant validity. The determination of the model fit was evaluated for confirmation through the application of thresholds and indices suggested in literature. This was followed by the structural model fit testing using the various indices to determine the model fit for the structural analysis. The determination of the structural model fit was subsequently followed by a summary of the eight proposed hypotheses relationships. In this study, seven of the hypotheses stated, were supported while one was rejected. At their respective significant levels, three relationships were significant while four were insignificant. The succeeding chapter provides a discussion of the research findings presented and outlined in this chapter.

CHAPTER 7: DISCUSSION OF FINDINGS

This chapter provides a discussion of the research findings that were presented in the previous chapter (chapter six). Chapter seven consists of two parts. The first part presents the demographic data of the respondents while the second part is the discussion of the main findings that were presented in chapter six. In addition, all the findings for the current study were interpreted and related, either contradicting or supporting existing study findings for their confirmation and rejection for the current study.

7.1.1 Wine purchasing frequency

Respondents were asked to comment on how often they purchase imported wine. The study findings presented in chapter six, illustrate that the 45% of the respondent purchase imported wine on special occasions. This implies that South African Generation Y predominately perceive imported wine as a celebratory drink that they prefer to purchase on special occasions. This verifies the notion that Generation Y view wine as a beverage for special occasions (Thach and Olsen, 2006). Conversely, the study findings suggest that there are significant differences in the wine consumption patterns between Generations X and Y (Fountain and Lamb, 2011). Generation Y could be described as regular wine drinkers (at least once a month) compared to the older Generation X who consume at least once a week (Fountain and Lamb, 2011). Contrary to this, a study in New Zealand found that Generation Y are drinking wine more frequently in more everyday contexts than the older generation (Fountain and Lamb, 2011). Furthermore, Corduas, Cinquanta and Levoli (2013) posit that the situation where the consumer intends to drink wine influences their preferences and may affect other attributes such as purchase frequency. The price of wine arguably influences wine purchase frequency. For instance, a higher price corresponds with social situations where one needs to impress guests, whereas a low price is more connected to personal relaxation (Corduas et al., 2013).

7.1.2 Region-of-origin

The question required respondents to select the region from which their imported wine comes. The list or options were based on the old wine producers such as France, Italy and

Spain. As an alternative to the old wine producers, the new world wine producers that include countries such as Argentina, United States and Chile was an option grouped as other. The findings of this study reveal that almost 50% of South African wine consumers prefer to purchase imported wine from 'other' which refers to new world countries. This could possibly be attributed by the fact that new world producers offer consumers a greater variety, are positioned with lower price strategies and drive to include new technologies (Castillo-Valero and García-Cortijo, 2015). Furthermore, results indicate wine brands from France are the number two preferred by South African wine consumers. This may also be attributed to the fact that French wines have an established history of producing good quality wines and have maintained a great brand image (Xu and Zeng, 2014). In addition, Chinese consumers prefer wines from France as they perceive them to be of good quality, with great taste and other desirable features that include social image (Xu and Zeng, 2014). Conversely, South African consumers may hold the same views about wine brands from France.

7.2 Main findings

Hypothesised Relationship	Hypothesis	Path Coefficient	P Value	Outcome
BT →BL	H1	0.818	***	Supported and significant
BT →BP	H2	0.596	***	Supported and significant
BT →BC	H3	0.177	0.007	Supported and insignificant
BL →BP	H4	0.260	0.013	Supported and insignificant
BP →PI	H5	0.132	0.188	Supported and insignificant
BC → BP	H6	0.012	0.783	Supported but insignificant
BC →PI	H7	0.644	***	Supported and significant
BL → PI	H8	-0.121	0.214	Not supported and insignificant

7.2.1 Brand Tribalism and Brand Love

A positive relationship was proposed between brand tribalism and brand love. The results of this study found a positive (0.818) and significant relationship (p=0.001) hence supporting the proposed hypothesis (H1). Since the path coefficient is 0.818, this relationship is the strongest of all and very significant (p=0.01). This implies that brand tribalism has the

strongest impact on brand love when compared to its influence on brand preference and credibility.

A cross examination of the empirical literature indicates that the current study findings echoes with previous scholarly research (Loureiro and Kaufmann, 2016; Bagozzi and Dholakia, 2006; Carroll and Ahuvia, 2006). For instance, Loureiro and Kaufmann (2016) argue that it is imperative for marketers to create brand tribes as this usually leads to emotional attachment which also eventually leads to brand love. Usually, members of a brand tribe are believed to be emotionally connected to specific brands and to ultimately develop brand love. A study conducted by Veloutsou and Moutinho (2009) revealed that brand tribalism is a better predictor of the strength of brand relationships than the long term brand reputation. Similarly, Lourerio (2016) and Veloutsou and Moutinho (2009) observed that brand tribalism is a significant predictor of the strength of the brand relationships which include brand satisfaction, brand attachment, brand trust and brand love. Brand love is one such brand relationship. This also proves that brand tribalism is a predictor of brand love.

Similarly, studies have proved that these specialised subcultures, also known as brand tribes, share a passion towards a specific brand which enables marketing managers to communicate better, establish and strengthen consumer relationships (Hsiu-yu, 2014). This is further supported by another study that revealed that brand tribes are venues where intense brand loyalty is expressed and fostered, and emotional connections with the brand is forged in customers (Bagozzi and Dholakia, 2006). Brand love is one such emotional connection that is resultant from brand tribalism. Subsequently, researchers concur that opinion leaders or influential consumers in brand communities or tribes also may influence the development of a feeling of love for a brand (Carroll and Ahuvia, 2006; Albert and Merunka, 2013). From a practitioner's perspective, for wine makers and marketers, it would be beneficial to implement marketing strategies that stimulate and encourage active tribal membership since this is most likely to influence brand love. In the long run, brand tribalism will increase the consumers' brand love.

In summary, based on the findings of the current study and existing literature, the proposed relationship between brand tribalism and brand love is prominent. This confirms that, among the wine drinkers in South Africa, the higher the identification and involvement with a brand tribe, the higher the chances that they will develop brand love towards imported wine brands.

7.2.2 Brand Tribalism and Brand Preference (Hypothesis 2)

A positive relationship was proposed between brand tribalism and brand preference. The results of this study found a positive (0.596) and significant relationship (p=0.001), hence supporting the proposed hypothesis (H2). Since the path coefficient is 0.596, this relationship is the third strongest of all and very significant (p=0.01). This validates that brand tribalism is a predictor of brand preference which suggests that tribal members are likely to have a stronger brand preference towards imported wine brands approved by their fellow tribal members. Against this backdrop, we can conclude that active tribal membership has a detrimental effect on the brand preference or choice of wine in South Africa.

The findings correspond with previous studies that substantiated that consumers actively participate in brand tribes to demonstrate and share their brand feelings and preferences with others (Ruane and Palace, 2015; Veloutsou and Moutinho, 2009). Furthermore, another study carried in Portugal amongst the surfing community examined tribal consumption behaviour in relationship to branding. The findings concluded that surfers prefer brands that sponsor surfing apparel and avoid brands that simply use surfing images in their advertising (Moutinho, Dionisio and Leal, 2007). This therefore infers that tribal members jointly prefer symbolic brands that reinforce their group identities. This further substantiates that brand tribalism is an antecedent of brand preference, also referred to as brand choice.

From a practitioner's perspective, international wine marketers are thus encouraged to implement marketing strategies, such as segmenting and targeting marketing efforts, particularly to promote active tribal membership. Such strategies targeted at brand tribes are likely to influence wine brand preferences which are shaped over time as consumers gain more wine experiences. In the long run, brand tribalism will increase the consumers' brand preference. Canniford (2011) postulates that rather than providing the locus of consumption, marketing to tribes entails introducing one's market offering (not even necessarily a brand) as a useful 'point of passage' in a tribal network. In actual fact, placing a brand as a useful point of passage within the brand tribe would encourage brand preference. In achieving this, wine consumers are more likely to prefer international wine brands that are endorsed by members of tribes to which they belong. Literature has shown that young consumers are exposed to the wide variety of wine cultivars and wine styles and it may take some time for novice wine drinkers to appreciate the entire spectrum of available red and white wine varieties in most

cases (Bester, 2012). Hence, the study's findings are in line with previous research that suggests that brand tribalism is a predictor of brand preference.

Overall, brand tribalism has a positive influence on brand preference. Drawing from the above assertions and findings from this study, one can therefore argue that the current study is empirically supported in prior literature. In other words, it can therefore be concluded that customers who portray brand tribalism are likely to prefer a similar wine brand preference, in contrast to consumers who are not part of a brand tribe.

7.2.3 Brand Tribalism and Brand Credibility (Hypothesis 3)

The current study proposed a positive relationship between brand tribalism and brand credibility. The findings of this study revealed a path coefficient of 0.177 and a p-value 0.177, an insignificant relationship (p=0.001). The findings of the relationship between brand tribalism and brand credibility indicated a positive yet statistically insignificant relationship. In other words, this suggests that belonging to a brand tribe does not necessarily influence the credibility of international wine brands. In the context of this study, active brand tribe members do not evaluate the credibility of international wine brands based on the views of their fellow tribal members.

Furthermore, it might be prudent to note that there is generally a dearth of studies that have attempted to investigate brand tribalism and brand credibility relationships. This could be a possible reason why it is a challenge to find empirical evidence to support the current research findings. Conceivably, there could be two possible explanations for this insignificant relationship; firstly, brand tribalism is a relatively new marketing construct that is gaining global popularity (Cova and Cova, 2002). Consequently, this could possibly affect how it is conceptualised in certain product categories where it has not been investigated, such as wine. Secondly, measurement instruments may have been suitable for the western world yet complex to understand for consumers in emerging markets, such as South Africa (Sigamoney, 2016; Burgess and Steenkamp, 2006).

The current research findings found a positive yet insignificant relationship, which is inconsistent with previous literature. Previous studies have found a positive relationship between brand tribalism and brand credibility. For instance, a study has evidenced that brand

tribalism is believed to create a platform to facilitate positive information exchange about a product or brand between tribal members, which ultimately positively improves credibility of a brand (Koppelaar, 2014). In essence, tribal members share and exchange information about their preferred brands, which further serves the purpose of reinforcing and building brand credibility. Additionally, previous literature found that brand tribalism, like brand communities, is potentially able to influence the credibility of high involvement products (McLaughlin, 2016). Wine is an example of a high involvement product. In addition, previous literature has buttressed a positive association between brand credibility and brand tribalism membership (Tuominen, 2011). Most important to note, one of the few existing studies investigated a reverse relationship, where brand credibility positively influenced brand tribe membership. Furthermore, this study established that higher levels of brand credibility lead to brand loyalty, and brand expertise and the subsequent influence of brand tribe on consumer behaviour (Sigamoney, 2016). Overall, brand tribalism has a positive impact on brand credibility, nonetheless the information exchange that happens in brand tribes is less likely to influence brand credibility of international wine brands in South Africa amongst Generation Y.

7.2.4 Brand Love and Brand Preference

The present study proposed a positive relationship between brand love and brand preference. The findings of this study revealed a path coefficient of 0.260 and a p-value 0.13, an insignificant relationship (p=0.001). The relationship between Brand Love and Brand Preference is statistically insigificant because it did not meet the level of significance of 5%. These findings suggest that brand love has a weaker effect on brand preference. In other words, consumers who love a brand may not, to a larger extent, prefer international wine brands over South African wine brands.

A possible motivation for the insignificant relationship is that brand love, like brand tribalism, is a trending construct which is probably not appropriately conceptualised in emerging markets. Albert and Merunka (2013) maintain that research on brand love is in its infancy internationally, thus offering limited insights into the antecedents and consequences of this construct. This is also the case in an emerging economy like South Africa and particularly in the wine industry research. However, consistent with scanty literature, brand love is perceived as predictor of brand preference and choices (Park et al., 2010; Howard and

Kerin, 2013). Similarly, previous research substantiates that brand love and attachments potentially impact the brand choices consumers make (Maxian, Bradley and Toulouse, 2013). Consumer-brand relationship studies advocate that a consumer prefers a certain brand, as a result of their love towards a brand (Halilovic, 2013). This suggests that consumers who already experience brand love show a preference towards a certain brand (Halilovic, 2013). Subsequently, research also demonstrated that the anxious or highly attached individuals demonstrate a preference for exciting brands (Swaminathan, Stilley and Ahluwalia, 2008). Nonetheless, under conditions of low avoidance and high anxiety, individuals tend to prefer sincere brands (Swaminathan et al., 2008). Hence, it may be inferred that the preference of a brand is based on the extent of attachment or love an individual has towards a brand. Further, Park et al. (2010) posited the significance of managing consumer's emotional attachment to brands as this understanding influences intention to perform difficult behaviours, such as brand preferences.

In summary, based on the findings of the present research and existing literature, the proposed relationship between brand love and brand preference is weak. Hence, this relationship is not empirically supported in previous literature.

7.2.5 Brand Preference and Purchase Intention

The present study proposed a positive relationship between brand preference and purchase intention. The findings of this study revealed a path coefficient 0.132 and a p-value 0.188, an insignificant relationship (p=0.001), hence not supporting the proposed hypothesis (H5). This suggests that there is a weak relationship between brand preference and purchase intentions. In the present study, this implies that a preference for international wine brands does not necessarily influence imported wine purchase intentions in South Africa.

Despite the statistically insignificant relationship found in the current study, a thorough examination of the literature suggests that there is a positive relationship between brand preference and purchase intention. Several scholars concur that brand preference is a key determinant of purchasing decisions and crucially influences consumers' brand choice and buying behaviours (Qasem, Baharun and Yassin, 2016; Mohebi and Khani, 2014; Wang, 2010; Chang and Liu, 2009). For instance, a study revealed that brand preference has a positive and significant effect on purchase intention (Mohebi and Khani, 2014). To add, Wang (2010) argues that price/value and performance quality, emotional and social

dimensions have varying impacts on brand preference and the purchase intention relationship. Nonetheless, although these values do not all necessarily impact consumer purchase intention, these values all improve consumer brand preference. Given the proven positive significant influence of brand preference on purchase intention, research has shown the benefits of creating multiple perceived product value is necessary for enhancing a positive attitude toward the brand, in turn, inducing purchase intention (Wang, 2010).This therefore implies that the greater the preference a consumer has for a brand over other brands, the higher the probability that consumer will purchase the brand.

In conclusion, brand preference has a positive, yet insignificant impact on purchase intention. The findings of the current study contradict previous literature, thereby suggesting that this relationship is not empirically supported. In the context of the current study, this means that brand preference of imported wine does not influence purchase intention of foreign wines in South Africa.

7.2.6 Brand Credibility and Brand Preference

The present study proposed a positive relationship between brand credibility and brand preference. The results revealed a positive relationship with a path coefficient of 0.012 and a p-value of 0.783. This implies that there is a weak relationship between brand credibility and brand preference, therefore suggesting that brand credibility may not necessarily influence brand preference of imported wine brands in South Africa amongst Generation Y consumers.

The findings of the current study are inconsistent with existing literature. Literature suggests that brand credibility has been found to significantly influence preference of brands (Kemp and Bui, 2011; Jin, Lee and Jun, 2015). For instance, a study that examined the influence of brand credibility on consumers' brand purchase intention via various constructs specifically focuses on luxury restaurant brands and luxury restaurant patrons. The findings of this research revealed that brand credibility positively and significantly impacts consumers' brand preference (Jin, et al, 2015). Subsequently, Kemp and Bui (2011) contend that one important mechanism through which brands can impact consumer choice is brand credibility. This means that brand credibility is a predictor of brand choice, a concept that is closely related to brand preference. A highly credible brand is most likely to feature in the consumer's choice options. Subsequently, Kemp and Bui (2011) examined the impact of brand credibility on

commitment and connection with consumers in the health care brands, they found that a credible brand minimises risk and increases consumer confidence. It is assumed that when consumers have confidence and find a brand less risky, they are likely to have high brand preference. However, Ederm and Swait (2004) investigated the opposite relationship, they found that brand credibility positively impacts on brand choice. In other words, the higher the brand credibility, the greater the chance that consumers will include it in their consideration set, thereby increasing brand preference.

Overall, brand credibility has a positive influence on brand preference, although insignificant (weak). That is to say, brand preferences of imported wine brands in South Africa are not entirely predicted by brand credibility. Perhaps this weak relationship could have been necessitated by the fact that South Africans may be shifting their preferences to South African wine brands as encouraged by Proudly South African promotions. Furthermore, customers change their brand preference frequently due to finding better services (Hwang and Ok, 2013). This could be the case with wine decisions. Hence, international wine marketers may need to develop strategies to maintain brand preference and distinguish themselves from locally produced wines with the goal of increasing purchase activity.

7.2.7 Brand Credibility and Purchase Intention

This study proposed a positive relationship between brand credibility and purchase intention. The findings of this study found a positive result with a path coefficient of (0.644) and significant relationship (p=0.001), hence supporting the proposed hypothesis (H7). Since the path coefficient is 0.644, this relationship is the second strongest of all the proposed hypotheses.

A thorough examination of the empirical literature indicates that the present study findings echo what was found in existing literature that postulated that brand credibility positively affects consumers' brand purchase intention (Jin, Lee and Lee, 2012; Wang and Yang, 2010; Ederm and Swait, 2004). For instance, a study's findings reveal that the more credible the brand, the higher the purchase intention is toward that brand (Wang and Yang, 2010). Somewhat interestingly, another study investigated brand credibility's effect on consumer purchase intentions in the airline sector, and demonstrates that brand credibility contributes to consumer purchase intention through both signalling and relationship marketing mechanisms

(Jeng, 2016). For instance, when a consumer believes the airline company delivers its promise (high trustworthiness), and has a positive feeling towards the company, the consumer is likely to purchase the service from the company (Jeng, 2016). Equally, a consumer who believes the airline company is capable of delivering on its promises (high expertise) would most likely purchase the service (Jeng, 2016). Furthermore, highly credible brands reduce uncertainty, therefore putting the consumer at ease, when making the decision as to whether to invest their resources in a particular brand through purchase (Sigamoney, 2016). Against this backdrop, it is evident that consumers are likely to have greater purchase intention toward imported wine brands that are highly credible, which further authenticates prior literature findings.

From a practitioner's perspective, foreign wine marketers are thus expected to implement marketing strategies that improve brand credibility. Improving and maintaining brand credibility such as through proving expertise and trustworthiness in the winery sector may possibly increase consumer' purchase intentions. In this context, international wine sellers would maintain expertise by ensuring that their wine is produced and kept in state of the art wine cellars or equipment. In addition, foreign wineries would employ knowledgeable wine sales people who educate consumers about the different wine varieties and the wine consumption experience.

Overall, brand credibility has a significant impact on purchase intention. Drawing from the above assertions and findings from the current study, one can therefore argue that the present study is empirically supported in existing literature. Thus, it can be postulated that high brand credibility is detrimental for successful consumer purchase intentions, particularly for international wine brands.

7.2.8 Brand Love and Purchase Intention

This study proposed a positive relationship between brand love and purchase intention. The findings on this relationship reveals that there is a negative relationship between brand love and purchase intention with a path coefficient of -121 and p-value of 0.214.This means that the proposed hypothesis is statistically insignificant thus the hypothesis is rejected. By implication, this implies that the more consumers love a brand the less likely they are to

purchase the brand – hence an inverse relationship. Given that the South African consumers are noted to love imported wine brands, it is surprising why they do not end up purchasing the brands. Perhaps this surprising finding could be explained by a number of reasons as provided below:

First, brand love, like brand tribalism mentioned earlier, is a fairly new branding construct that is gaining prominence both globally and in South Africa. Therefore, there is a dearth of studies that have investigated this construct. In addition, the measurement scales were developed in the Western world which may have affected the conceptualisation of the construct in a South African context (Sigamoney, 2016; Burgess and Steenkamp, 2006). Furthermore, the contradiction to literature could be attributed to the fact that South African Generation Y consumers are said to be brand loyal to proudly South African products (Bester, 2012). Perhaps, some consumers may have brand love towards imported wine brands but opt to purchase proudly South African wines out of sheer patriotism. Also, Generation Y is known to prefer quality and well-priced wine (VinIntell, 2013). Furthermore, South African consumers revealed more sensitivity to prices due to the economic turmoil experienced in the past years (Euromonitor, 2017). Correspondingly, research confirms that South African wine consumers are generally considered to be more price-sensitive and less likely to venture into higher priced products (Wesgrow, 2017). Possibly, consumers may be price sensitive and thus involuntarily settle for affordable South African produced wine brands.

Also important to note is the fact that the aforementioned negative relationship is contrary to findings in the previous studies. In particular, studies have postulated that brand love is a driving force to predict loyalty and purchase behaviour (Filho, Monteiro and Souki, 2010; Loureiro and Kauffmann, 2012). Furthermore, the findings of the current study contradict previous research that argued that brand love is a good predictor of recommendation and loyalty in the wine sector (Loureiro and Kaufmann, 2012). In this case, brand loyalty can be expected to be indicative of purchase or repurchase intention. To buttress this assertion, Loureiro and Kaufmann (2012) further reveal that consumers who have passion and love for a particular brand are the first to purchase it and recommend it to others. Drawing from the foregoing arguments, it can therefore be expected that brand love has a positive relationship with purchase intention. Also, brand attachment - which can be regarded as a proxy of brand

love – has been found to have a positive relationship with purchase intention (Mourad and Valett-Florence, 2012).

However, despite the fact that the current research finding is contrary to the majority of prior research findings as aforementioned, Sakar and Sreejesh (2014) did not find a direct relationship between brand love and purchase intention, but rather asserted that brand love leads to brand jealousy. Brand jealousy then leads to purchase intentions. Furthermore, a recent unpublished PhD thesis by van den Berg (2017), in South Africa, found a negative relationship between brand love and purchase intention of global fashion brands. Perhaps, this could be one study to support the current research finding, although the contexts are different. Although the research contexts (Wine industry and Fashion industry) are different, it is interesting to note that both studies predominately consisted of women in South Africa. Could this imply that there is something in common amongst women who happen to belong to the Generation Y cohort that necessitated the negative relationship on the contrary to the proposed hypothesis? This remains a possible future research avenue.

7.3 Chapter summary

This chapter began with a discussion of the demographics. Specifically, gender, region of South African purchases where discussed. Thereafter, a discussion of the proposed relationships was presented. In fact, seven out of the eight proposed relationships are empirically supported in the existing literature. One relationship, (brand love and purchase intention) in rejected, thereby implying that brand love does not lead to purchase intention of imported wine in South Africa. The succeeding chapter (eight) provides overall conclusions, contributions, limitations and recommendations for future research.

CHAPTER 8: CONCLUSIONS AND RECOMMENDATIONS

8.1 Introduction

The previous chapter seven provided a discussion of the empirical findings of the study. The current chapter (eight) has five purposes. First, it seeks to provide conclusions for the main findings of the thesis. Second, it provides the managerial implications of the study. Third, it provides theoretical and conceptual contributions of this thesis. Fourth, it provides directions for prospective or future research in light of the study's limitations. Firth, an overall chapter summary is presented.

8.2 Overview of study's objectives

The main objective of the current research was presented in the introduction chapter (chapter one). The specific objectives of the study are listed;

- To investigate the influence of brand tribalism on brand love
- To ascertain the influence of brand tribalism on brand preference
- To determine the relationship between brand tribalism and brand credibility
- To investigate the influence of brand love on brand preference.
- To examine the relationship between brand preference and purchase intention.
- To investigate the influence of brand credibility on purchase intention.
- To determine if there is any relationship between brand love and purchase intention.

Based on the aforementioned objectives, the next section presents conclusions and the extent to which these objectives were achieved in the present study.

8.3 Conclusion of main findings

The present study was primarily concerned with investigating the antecedents of consumer purchase intention of imported wine amongst Generation Y in South Africa. The conclusions are based on the empirical results of the proposed relationships, and also on how these findings relate to existing literature. Overall, this study concludes that brand tribalism has the strongest impact on brand love when compared to its influence on brand preference and

credibility on consumers' intention to purchase imported wine. The sample consisted of 321 wine consumers in South Africa which provides important implications for international wine marketers.

8.3.1 Influence of Brand Tribalism on Brand Love

The first objective was to investigate the influence of brand tribalism on brand love. The present study found a positive and significant relationship between brand tribalism and brand love. Based on the results of the current study and existing literature, the proposed relationship between brand tribalism and brand love is prominent. This confirms that the higher the identification and involvement within a brand tribe, the greater the chances that South African wine drinkers will develop brand love towards imported wine brands. This assertion is reinforced by the notion that Generation Y are an emerging wine drinking market that is highly influenced by their fellow tribal members and consequently share consumption experiences online or on other platforms (Bevan-Dye, 2016; Bester, 2012). Therefore, this study concludes that brand tribalism positively leads to love of a brand, also referred to as brand love. Drawing from the foregoing conclusive remarks, the study findings have managerial and strategic implications to be discussed in the forthcoming sections.

8.3.2 Influence of Brand Tribalism on Brand Preference

The present study found a positive relationship between brand tribalism and brand preference. The empirical findings suggest that brand tribalism positively influences brand preference. Precisely, the more consumers identify and actively participate in brand tribes, the more likely that this will influence their brand preference. In the context of this study, consumers who belong to particular brand tribes are likely to have brand preference for imported wine brands. The research findings substantiate existing studies that proved that consumers actively participate in brand tribes to demonstrate and share their brand feelings and preferences with others as stated by Ruane and Palace (2015); Veloutsou and Moutinho (2009).

8.3.3 Influence of Brand Tribalism on Brand Credibility

The third objective was to investigate the influence of brand tribalism on brand credibility. The findings of this study found a positive relationship between brand tribalism and brand credibility. The relationship between brand tribalism and brand credibility is weak or

insignificant. Although existing literature from scholars, such as McLaughlin (2016), demonstrated that brand tribalism facilitates the influence and the credibility of high involvement products and brands, in the context of this study, the results suggest a weak relationship between brand tribalism and brand credibility in the wine context in South Africa. The implications are discussed in a separate section.

8.3.4 Brand Love and Brand Preference.

The fourth objective of the study was to examine the influence of brand love on brand preference. The findings of the current study show a positive and yet insignificant relationship between brand love and brand preference. The current study findings contradict the existing literature that has proven that brand love predicts brand preference and choices (Park et al., 2010; Howard and Kerin, 2013). In this study, the findings have proven that there is no relationship between brand love and brand preference. This implies that the South African consumer's brand love does not necessarily influence their brand preference of imported wine brands.

8.3.5 Influence of Brand Preference and Purchase Intention

The fifth objective of the study was to investigate the influence of brand preference on purchase intention. The results indicate a positive yet insignificant relationship between brand preferences and purchase intention of imported wine brands amongst Generation Y in South Africa. Nevertheless, the current study findings contradict scholarly evidence that advocates brand preference is a fundamental predictor of purchasing decisions and significantly influences consumers' brand choice and purchase intention (Qasem, Baharun and Yassin, 2016; Mohebi and Khani, 2014; Wang, 2010; Chang and Liu, 2009). This suggests that brand preference does not necessarily influence purchase intention of imported wine brands in South Africa. Therefore, this study concludes that there is no relationship between brand preference and purchase intention.

8.3.6 Influence of Brand Credibility and Brand Preference

The sixth objective was to investigate brand credibility and brand preference. The results of the study indicate a positive yet insignificant relationship between brand preference and brand credibility. These results demonstrate that brand credibility of international wine brand may not influence brand preference of imported wine amongst Generation Y consumers in

South Africa. Overall, this study concludes that brand preference does not lead to brand credibility and is not empirically supported in literature.

8.3.7 Influence of Brand Credibility and Purchase Intention

The seventh objective was to investigate the influence of brand credibility on purchase intention. The results of the study indicate a positive relationship between brand credibility and purchase intention. Several scholars have investigated this relationship across various industries and proven that the credibility of a brand positively influences purchase intentions (Erdem and Swait, 2004: Wang and Wang, 2010; Jeng 2016). This study's results concur with existing literature, suggesting that higher credibility of foreign wine brands is most likely to lead to purchase intention among South African wine drinkers. Foxcroft (2009) argued that South Africa's wine drinking per capita is still relatively low for a wine drinking nation, beer is still the number one consumer beverage. Therefore, highly credible international brands are likely to penetrate the South African wine and be selected for purchase.

8.3.8 Influence of Brand Love on Purchase Intention

The eighth objective was to investigate the influence of brand love to purchase intention. The empirical findings suggest a negative relationship between brand love and purchase intention. This implies that brand love does not lead to purchase intention of imported wine brands in South Africa. There are a few possible explanations for this negative relationship: firstly, South African wine drinkers are possibly brand loyal to proudly South African produced wine brands. Secondly, Generation Y consumers prefer well-priced wines, this could perhaps be the reason for the inverse relationship between brand love and purchase intention given that most imported wines cost more than local wines. The findings contradict the limited research on brand love and purchase intention. Somewhat interestingly, another study also found a negative relationship between brand love and purchase intentions of global fashion brands among the black middle class in South Africa. This could be an interesting trend of an emerging market that warrants further investigation.

8.4 Contributions

The present study has a three-fold contribution namely; conceptual, theoretical and practical. The subsequent section provides a discussion of these aforementioned contributions.

8.4.1 Conceptual Contribution

The current study makes a significant research contribution to Africa and more specifically South Africa which is a potentially financially lucrative emerging market. The study examined the Generation Y cohort's buying behaviour of wine brands. Principally, the research investigated the predictors of consumer purchase intention of imported wine brands among Generation Y in South Africa.

Previous studies in the developed countries have investigated country-of-origin, wine knowledge and brand trust as predictors of imported wine purchase intentions (Corduas, Cinquanta and Levoli, 2013; Fountain and Lamb, 2011; Bruwer and Buller, 2012; Hu, Li, Xie and Zhou, 2008). The conceptualisation of this study offers an original insight into studies in brand tribalism and purchase intention on imported wine brands. Furthermore, to the researcher's knowledge, branding constructs such as brand love, brand credibility have been tested collaboratively as a conceptual model to what extent brand tribalism predicts purchase intentions.

8.4.2 Theoretical Contribution

Overall, this study provides significant theoretical contributions to literature in various fields such as brand management, consumer behaviour, international wine marketing and other related fields. First and foremost, its contribution was the investigation of brand tribalism in a wine context. In addition, this study contributes to the social identity and consumer culture theories by providing a framework which elaborates the relationship between brand tribalism and purchase intention. To add, there is a dearth of studies, both internationally and locally, that have investigated this construct.

Consequently, this research adds to scholarly literature as the findings evidenced that brand tribalism is an antecedent of purchase intentions. In addition, the research revealed that brand love, brand preference and brand credibility are also predictors of imported wine purchase

intention. Also important to note, brand tribalism was found to have the strongest impact on brand love in comparison to brand credibility and preference.

Further, the present study adds to consumer brand relationships literature, particularly brand tribalism and brand love that are gaining popularity amongst researchers and marketing practitioners. It has been affirmed that building brand relationships with consumers through brand tribalism and brand love has positive consequences for marketers, such as brand loyalty, repeat purchases, word-of-mouth (Unal and Aydin, 2013; Batra et al., 2012; Roy et al., 2012; Carroll and Ahuvia, 2006). Finally, the results from this study are expected to contribute to theory by closing gaps on international wine literature in developing or emerging markets. For instance, international wine marketers will be aware that brand credibility is not a fundamental predictor of brand preferences amongst Generation Y consumers in South Africa.

8.4.3 Practical Contribution and Managerial Implications

In addition to the academic and conceptual contributions, this study has practical and managerial implications. Essentially, the findings for this research have significant practical contributions for international wine brands, marketing and brand managers. Overall, the findings derived from examining brand tribalism and its impact on consumers' purchase intention, may provide marketing practitioners with a better understanding of branding constructs and possible strategies that may be executed to stimulate consumers' buying behaviour of imported wine brands.

First, the wine industry hosts a few wine events such as the Good Food and Wine how, several wine tasting events in major cities such as Durban, Cape Town and Johannesburg, and the Michelangelo Wine and Spirits International Awards, to mention a few. International wine marketers may need to heavily advertise at large food festivals, such as the DSTV Delicious Food and Music Festival. The DSTV Delicious Food and Music Festival is the biggest food and music festival in Africa (www.deliciousfestival.com). This is an international festival for music and food lovers that hosts approximately 40 000 guests in Johannesburg. The presence of international wine producers at such a festival could capture wine connoisseurs and wine novices who require wine knowledge. Furthermore, such an

artsy environment may be a possible platform for marketers to build brand tribes, mainly because the attendees have common interests and are likely to influence each other about brands.

The Michelangelo international awards mentioned above is a prestigious platform for international wines to be adjudicated by a panel of experts. This is an affluent and exclusive event that costs R970 which is relatively steep for a younger consumers' Generation Y. This probably targets older advanced wine connoisseurs. Moreover, in the past, wine consumers were perceived as a clique of older individuals that relished vintage reds and that would be absorbed in some politically-correct conversations (Demes, 2016). Hence, international wine marketers may need to change the perception that wine is a snobbish beverage for older affluent consumers by building a strong wine drinking culture to different income segments within Generation Y. For instance, wine tasting could be available at farmers markets such as the Fourways farmers market, 27 boxes in Melville, Arts on Main, Neighbourgoods, Hope street market, that are growing tremendously in metropolitan cities across the country. These are markets where families and young adults gather over weekends to have artisanal and organic merchant and local farm produce while relaxing over drinks. This is substantiated by Thompson (2010) who confirmed that Generation Y prefer to see advertising promotions that show food and wine being enjoyed together, while highlighting the experience with groups of friends and family and times of celebration. Therefore, this assertion advocates the necessity for foreign wine marketers to incorporate their wine marketing with food and music festivals to influence wine tribal behaviour that may ultimately build brand love.

Subsequently, wine marketers may also partner with music festivals, J'oburg day, and jazz festivals which will attract a younger audience who want vibrant surroundings although still maintaining the sophistication associated with wine. For example, international wine marketers may partner with radio stations like 5FM, Kaya FM and 702 to host annual wine and music concerts across the country. These radio stations target the urban adults aged between 25-49, which is essentially, Generation Y. That way, wine drinking and pairing experience is associated with a fun, hip and relaxed vibe. It is at such events, that marketers can build successful brand tribes and enhance their brand preference and brand credibility. International wine marketers should strive to be in the wine consumer's preference or choice consideration set of tribal members.

Further, given that there has been a steady decline of wine consumption globally, there is still a growing need for wine imports in emerging markets (Li, Hu and Jun, 2015). South Africa is an example of an emerging market in the developing world with a rapidly growing economically active Generation Y (Bevan-Dye, 2015; Bester, 2012). Perhaps, building sustainable customer-brand relationships may be employed as a strategy to influence consumer purchase intention, especially since South African consumers have access to a variety of local wines. In addition, the study advocated that brand tribalism has a great influence on South African consumer's brand love for imported wine. Generation Y consumers are arguably heavy internet users, they use social media for entertainment and as an information source to share reviews from their peers. Therefore, there is a need for marketers to build and maintain wine brand tribes, particularly on social networks. This is supported by literature findings that reveal that this cohort is eager to get information and how they want it and when they want it and social media is their favourite platform (Hoekstra, Lashley and Cavagnaro, 2015). Thus, social networks would be an ideal ground to monitor brand tribes and implement the strategies mentioned above that influence brand preferences for international marketers wine brands.

Although the scope of this study was not to racially profile wine drinkers, the black consumers make up 76.4%, which is the majority of the population (SAWIS, 2013). This provides potential sales opportunities for international marketers given that this segment contributes approximately R400bn to the GDP (Demes, 2016). Particularly, growing and maintaining the black middle class would be beneficial for international wine brands to expand into this rapidly growing community. Studies reveal that there has been a shift towards the rise of black wine connoisseurs and also black producers are entering the wine scene (Demes, 2016). Hence, it will be beneficial for marketers to build sustainable brand tribes that encourage more black people to experiment and learn more about international wine brands.

Furthermore, findings of this research advocate for marketers to focus on emotional and tribal marketing branding strategies. For instance, marketers may design an attractive packaging which is the first branding strategy that attracts consumers to the brand and creates brand love and most probably positively influences wine brand preferences. Perhaps this packaging

could include information on eco-friendly practices used in the wine production and calorie information. Further, marketers may employ advertising and promotional messages that convey more symbolic and emotional themes that stimulate consumer's tribal identification and ultimately lead to the love of a brand. Possible outcomes of brand love are increased loyalty, intention to pay a premium price and positive word-of-mouth (Batra et al., 2012; Carroll and Ahuvia, 2006).

Furthermore, this study found a positive relationship between brand preference and purchase intention. Thus, it would be fundamental for international marketers to ensure that their wine brands are the preferred wine over the locally produced wine. For instance, Hoekstra, Lashley and Cavagnaro (2015) submit that Generation Y chooses the values they follow and they tend to have strongly brand preferences for those firms which give charitable contributions. Therefore, international wine marketers may explore the option of giving back to certain causes, such as primary and higher education, which is still not accessible to many disadvantaged communities.

Given that brand credibility consists of expertise and trustworthiness, international wine marketers and wine firms should improve their expertise and trustworthiness in order to positively influence consumer perceptions of brand credibility. For instance, they need to build a perception that consumers perceive that their brand has the ability and willingness to continuously deliver what has been promised, for example, inviting industry experts such as wine reviewers to taste their wines. Additionally, foreign wine marketers could also use celebrity endorsement that matches their brand image to reinforce brand credibility. Research has demonstrated that celebrity endorsers can increase credibility (trustworthiness) for a brand, given that brand credibility has its origins rooted to source credibility or celebrity endorsement (Jin et al., 2015).

Moreover in the wine industry, the higher brand credibility includes expertise in its product and service. Expertise perceived by restaurant customers can be generated by exceptional food, superb ambience, and high-level customer service. Hence, international marketing practitioners need to promote their wine to provide their consumers with high end wine brands that are loved, preferred and are purchased by tribal members.

8.5 Limitations and recommendations for future research

This study intended to gain greater insights into the antecedents of consumer purchase intention of imported wine amongst Generation Y in South Africa. Granted, this research made remarkable contributions to literature and marketing practitioners, it has few limitations that map or recommend prospects for future research. First, this study was conducted in the wine sector, hence this may impact on the generalisability of the results in other product or service categories. Furthermore, this research explicitly focused on antecedents' imported wine purchases, therefore these insights for South African produced wine purchase intentions might be dissimilar. Second, data was collected through an online survey which generally is known to have low response rates. Thus, the findings of this study may not be entirely representative of the wine drinkers in South Africa.

8.5.1 Recommendation for future research

This research contributes to various disciplines, such as international wine marketing, brand management and consumer behaviour. The aforementioned limitations of the research guide directions for future research in several ways. The first recommendation relates to an extension to the conceptual model. In line with the first limitation, this conceptual model may need to be replicated in other service or product categories in order for findings to be generalisable. In addition, future studies may include other brand relationship quality constructs such as brand trust, brand commitment and brand satisfaction when investigating the factors that motivate consumer purchase intention of imported wine brands.

In addition, similar studies could be conducted through self-administered surveys, as opposed to the online survey. For instance, this can be done at wine festivals, restaurants, retail outlets and wine tours in order to reach a greater population of wine drinkers. Furthermore, this type of survey will assist the research to elaborate on any questions that may be challenging to respondents. Moreover, the research is guaranteed to attain a high participation rate. In addition, further studies could employ both self-administered and online surveys in order to determine whether factors affecting wine purchase intentions vary between the two.

In addition, international wine marketers may need to explore less complex white wine varieties that are generally preferred at younger ages. This could be the case in South Africa. Bester (2012) pointed out that as the novice wine drinkers start trialling with more complex wines and improve their wine consumption experience level, they may eventually "upgrade" their wine brand preferences for more complex red wine and wooded white wine varieties.

Furthermore, this study could be replicated with a qualitative methodology. Qualitative studies are likely to generate deeper insights into the factors that motivate Generation Y to purchase imported wine brands. In addition, a future study could be comparative between western countries and other emerging markets such as South Africa, Brazil, China and India. Finally, the current study was a cross sectional study, future studies could be longitudinal with the view of investigating whether antecedents of purchase change over a period of time.

8.6 Overall conclusions

The purpose of this study was to investigate the influence of brand tribalism on purchase intention of imported wine brands among Generation Y. The researcher conducted a comprehensive literature search by reviewing texts books, journals and wine websites in order to discover the research gaps, provide a research context and empirical literature. The social identity, consumer culture and aspirational based choice theories were also reviewed to ground the study. Drawing from the literature, a conceptual model and hypothesis was developed for the study. Successively, data was collected through an online survey from a sample of 321 wine drinkers in South Africa. The data was then analysed using SPSS and Amos software.

This study found positive relationships between seven out of the eight proposed hypothesis. Nonetheless, brand tribalism–brand love, brand tribalism-brand preference and brand credibility-purchase intention relationships were significant. The brand love-purchase intention relationship was rejected.

Somewhat interestingly, this research established a negative relationship between brand love and purchase intention. The price of imported wine may be one of the many factors that affected consumer purchase intention. Furthermore, given that females were the majority of

the respondents of this study, the premium prices of imported wine may have influenced their negative outcome of the brand love-purchase intention relationship. Studies have confirmed that during the wine purchase decision making process, females evaluate the price cue significantly more than males, this means that females are more concerned about the financial risk associated with purchasing of wine (Forbes, 2012; Atkin, Nowak and Garcia, 2007). As discussed in the practical implications aforementioned, international wine marketers need to find aggressive and innovative marketing strategies to appeal to this lucrative generational cohort.

Apart from the strategies discussed previously, perhaps international wine marketers may need to consider glocalisation strategies when marketing to the South African wine drinkers. Glocalisation refers to a concept of thinking globally and acting locally, ideally, an approach oriented towards the market conditions and requirements whilst taking care of the drawbacks associated with standardisation that the company utilises in regional and national markets (Robertson, 1994). For instance, international wine marketers could link wine with the braai and fun lifestyle patterns of South Africans and other aforementioned strategies.

8.7 Chapter Summary

This chapter set out to provide overall conclusions for the thesis. Initially, an overview of the study's objectives was outlined. The findings of this chapter provide insights into the antecedents of consumer purchase intention of imported wine in South Africa. These results could be beneficial for international wine marketers that want to tap into a highly lucrative and financially viable generation. Thereafter, the conclusion of findings of the study per hypothesis were provided. Furthermore, managerial implications of the study were outlined. Subsequently, the conceptual, theoretical and marketing contributions were presented. Finally, the limitations of research and directions for future research are outlined.

REFERENCES

Aaker, D.A. (2004). Leveraging the corporate brand. *California management review*, 46(3), 6-18.

Abdelhamied, H. H. (2011). Customers' perceptions of floating restaurants in Egypt. Anatolia: *An International Journal of Tourism and Hospitality Research*, 22(1), 1 – 15.

Acharya, A. S., Prakash, A. Saxena, P and Nigam, A. (2013). Sampling: Why and How of it*? Indian Journal of Medical specialities*, 4 (2), 330-333.

Acosta, P. M., and Devasagayam, R. (2010). Brand cult: extending the notion of brand communities, *Marketing Management Journal*, 20(1), 165-176.

Addis, M., and Podesta, S. (2005). Long life to marketing research: a postmodern view. *European Journal of Marketing*, 39 (3/4), 386-413.

Ahuvia, A. C. (2005). Beyond the extended self: Loved objects and consumers 'identity narratives. *Journal of Consumer Research* 32 (1) 171 – 184.

Ahuvia, A. C. (2015). Nothing matters more to people than people: brand meaning and social relationships. *Brand Meaning Management Review of Marketing Research*, 12, 121-149.

Ahuvia, A., Carroll, B., and Yung, Y. (2006). Consumer culture theory and lifestyle segmentation. *Innovation Marketing*, 2 (6), 33-43.

Akdeniz, B. Calantone, R. J. and Voorhees, C. M. (2013). Effectiveness of marketing cues on consumer perceptions of quality: the moderating roles of brand reputation and third party information. *Psychology Marketing*, 30(1), 76-89.

Akpojivi, U. and Bevan-Dye, A. (2015). Mobile advertisements and information privacy perception amongst South African Generation Y students. *Telematics and Informatics*, *32*(1), 1-10.

Alam, A., Arshad, M. U. and Shabbir, S. A. (2012). Brand credibility, customer loyalty and the role of religious orientation. *Asia Pacific Journal of Marketing and Logistics*, 24 (4), 583-598.

Albert, N., and Merunka, D. (2013). The role of brand love in consumer-brand relationships. *Journal of Consumer Marketing*, 30(3), 258-266.

Albert, N., Merunka, D., and Vallette-Florence, P. (2008). When consumers love their brands: Exploring the concept and its dimensions. *Journal of Business Research*, 61, 1062-1075.

Albert, N., and Valette-Florence, P. (2010). Measuring the love feeling for a brand using interpersonal love items. *Journal of Marketing development and Competitiveness*, 5(1), 57.

Adelman, M.B., Ahuvia, A.C. and Goodwin, C. (1994). Beyond smiling: social support and service quality", in Rust, R.T. and Oliver, R.L. (Eds), *Service Quality. New Directions in Theory and Practice, Sage Publication*s, Thousand Oaks, CA.: Sage 139-71.

Al- Ekam, J. M. E., Mat, N, K. N., Salleh, S. M., Baharom, N. B., Teh, T. R. B. T., Noh, N. A. B and Hussain, N. E. B. (2012). The influence of Trust, Advertising, Family on Intention and Actual Purchase of local brands in Yemen. *American Journal of Economics*, 64-68.

Algesheimer, R., Dholakia, U. M., and Hermann, A. (2005). The social influence of brand community: evidence from German car clubs. *Journal of Marketing*, 64, 19-34.

Allen, M.W. (2001). A practical method for uncovering the direct and indirect relationships between human values and consumer purchases. *Journal of Consumer Marketing*, 18(2) 102-120.

Ameri, H.S. and Behnam, M. (2014). The effect of brand credibility on consumers' perception. *Sport Science* 7 (2) 50-57.

Anderson, J.C. and Gerbing, D.W. (1988). Structural equation modeling in practice: A review and recommended two-step approach. *Psychological bulletin*, 103(3) 411.

Anggraeni, A. and Rachmanita (2015). *Effects of Brand Love, Personality and Image on Word of Mouth; the Case of Local Fashion Brands among Young Consumers*. 2nd Global Conference on Business and Social Science-2015, GCBSS-2015, 17-18 September 2015, Bali, Indonesia.

Arnould, E. J., and Thompson, C. J. (2007). Consumer Culture Theory (And we really mean theoretics): Dilemmas and opportunities posed by an academic branding strategy. *Consumer Culture Theory Research in consumer behaviour*, 11, 3-22.

Askegaard, S. and Linnet, J. T. (2011). Towards an epistemology of consumer culture theory: Phenomenology and the context of context. *Marketing theory*, 11(4), 381-404.

Atkin, T., Nowak, L. and Garcia, R. (2007). Women wine consumers: information search and retailing implications. *International Journal of Wine Business Research*, 19(4), 327-339.

Atkin, T. and Thach, L. (2012). Millennial wine consumers: risk perception and information search. *Wine Economics and Policy*, 1(1), 54-62.

Arora, N., Dreze, X., Ghose, A., Hess, J.D., Iyengar, R., Jing, B., Joshi, Y., Kumar, V., Lurie, N., Neslin, S. and Sajeesh, S. (2008). Putting one-to-one marketing to work: Personalization, customization, and choice. *Marketing Letters*, 19(3-4) 305.

Aryani, A. Y. (2009). *The effect of fairness perception of performance measurement in the balanced scorecard environment.* Doctor of Philosophy: Victoria University.

Bachri, N., Lubis, A. R., Nurdasila and Majid, M.S., (2016). Credibility and Consumer Behaviour of Islamic Bank in Indonesia: A Literature Review. *Expert Journal of Marketing*, 4(1), 20-23.

Badrinarayanan, V., A. Sierra, J. J. and Taute, H. A. (2014). Determinants and Outcomes of Online Brand Tribalism: Exploring Communities of Massively Multiplayer Online Role Playing Games (MMORPGs). *Psychology and Marketing*, 31(10), 853-870.

Baek, T. H., Kim J., and Yu, J. H. (2010). The differential roles of brand credibility and brand prestige in consumer brand choice. *Psychology and Marketing*, 27(7), 662-678.

Baek, H T. and King, W K. (2011). Exploring the consequences of brand credibility in services. *Journal of Services Marketing, 25*(4), 260-272.

Baggozi, R. P., and Dholakia, U. (2006). Antecedents and purchase consequences of customer participation in small brand group communities. *International Journal of research in Marketing*, 23,184-206.

Bagozzi, R.P. and Dholakia, U.M. (2002). Intentional social action in virtual communities. *Journal of interactive marketing*, 16(2), 2-21.

Bajde, D. (2013). Consumer culture theory re-visits actor-network theory: Flattening consumption studies. *Marketing Theory*, 13(2), 227-242.

Baker, R. K., and White, K. M. (2010). Predicting adolescents' use of social networking sites from an extended theory of planned behaviour perspective. *Computers in Human behaviour*, 26, 1591-1597.

Banerjee, S., (2016). Influence of consumer personality, brand personality, and corporate personality on brand preference: An empirical investigation of interaction effect. *Asia Pacific Journal of Marketing and Logistics*, 28(2), 198-216.

Barber, N. (2009). Wine consumers information search: Gender differences and implications for the hospitality industry. *Tourism and Hospitality Research*, 9(3), 250-269.

Barber, N., Ismail, J. and Dodd, T. (2007). Purchase attributes of wine consumers with low involvement. *Journal of Food Products Marketing*, 14, 69- 86.

Barber, N.A. and Taylor, D.C. (2013). Experimental approach to assessing actual wine purchase behaviour. *International Journal of Wine Business Research*, 25(3), 203-226.

Barbosa, L. F. B., Bispo, F., Cajuero, D. O., and Gil, R. (2012). Revealed (P) Reference Theory with aspirations. *In 34º Meeting of the Brazilian Econometric Society.*

Batra, R., Ahuvia, A. C., and Baggozi, R. P. (2012). Brand love. *Journal of Marketing*, 76(2) 1 -16.

Bentler, P. M., and Bonett, D. G. (1980). Significance tests and goodness of fit in the analysis of covariance structures. *Psychological Bulletin*, 88, 588-606.

Bergkvist, L., and Bech-Larsen, T. (2010). Two studies of consequences and actionable antecedents of brand love. *Journal of Brand Management*, 17 (7), 504-518.

Berndt, A and Petzer, D. (2011). *Marketing Research*. Cape Town: Pearson Education South Africa.

Bester, I. 2011. *Classifying South African Chenin blanc wine styles* (Doctoral dissertation, Stellenbosch: Stellenbosch University).

Bester. I. (2012). Generation wYne: the new generation wine consumer. WineLand 271:96.

Bevan Dye (2016). *Profiling the Generation Y cohort.* [Inaugural lecture: Vaal Triangle Campus, North-West University] 23 November 2016.

Bian, H. (2011). Structural Equation Modelling Using Amos retrieved from http://core.ecu.edu/ofe/StatisticsResearch/SEM%20with%20AMOS%20I%20PDF.pdf Accessed (09/01/2017).

Bigné- Alcañiz, E., Currás-Pérez, R. and Sánchez- García, I. (2009). Brand credibility in cause-related marketing: the moderating role of consumer values. *Journal of Product and Brand Management*, 18 (6), 437-447.

Blumberg, B.F., Cooper, D.R. and Schindler, P.S., 2005. Survey research. *Business research methods*, 243-276.

Blumberg, B.F., Cooper, D.R. and Schindler, P.S. (2014). *Business research methods*. New York: McGraw-Hill education.

Bollen, K. A. (2014). *Structural equations with latent variables*. Toronto: John Wiley & Sons.

Bollen, K.A. (1989). A new incremental fit index for general structural equation models. *Sociological Methods & Research, 17*(3), pp.303-316.

Bolton, R. N., and Drew, J. H (1991). A Longitudinal Analysis of the Impact of Service Changes on Customer Attitudes, *Journal of Marketing*, 55 (1), 1-10.

Bonache, J., Langinier, H., and Oberty, C. Z. (2016). Antecedents and effects of host country nationals negative stereotyping of corporate expatriates. A social identity analysis. *Human Resources Management* Review, 59-68.

Bougoure, U. S., Russell-Bennett, R. and Hasan, S, F. E. (2016). The impact of service failure on brand credibility. *Journal of Retailing and Consumer Services*, 31, 62- 71.

Branchik, B. J. (2010). Silver dollars: The development of the US elderly market segment. *Journal of Historical Research in Marketing*, 2(2), 174-197.

Breivik, E. and Thorbjornsen, H. (2008). Consumer brand relationships: an investigation of two alternative models. *Journal of the Academy of Marketing Science*, 36 (4), 443-72.

Brown, T. A. (2015). *Confirmatory factor analysis for applied research*. New York: Guilford Publications.

Brown, M.W. and Cudeck, R. (1993). Alternative ways of assessing model fit. In Bollen, K.A. & Long, J.S., eds. *Testing structural equation models*. Newbury Park, CA: Sage, pp. 136-162.

Bruwer, J. (2002). Marketing wine to Generation-X consumers through the tasting room. *The Australian and New Zealand Grape grower and Winemaker*, 467, 67-70.

Bruwer, J. and Alant, K., (2009). The hedonic nature of wine tourism consumption: an experiential view. *International Journal of Wine Business Research*, 21(3), 235-257.

Bruwer, J. and Buller, C. (2012). Country-of-Origin (COO) brand preferences and associated knowledge levels of Japanese wine consumers. *Journal of Product and Brand Management*, 21 (5), 307-316.

Bruwer, J., Coode, M., Saliba, A. and Herbst, F., (2013). Wine tourism experience effects of the tasting room on consumer brand loyalty. *Tourism Analysis*, 18(4), 399-414.

Bruwer, J., Fong, M., and Saliba, A. (2013). Perceived risk, risk reduction strategies and consumption occasions. Roles in the wine consumer's purchase decisions. *Asia Pacific Journal of Marketing and logistics*, 25 (3), 369-390.

Bruwer, J. and Huang, J. (2012). Wine product involvement and consumers' BYOB behaviour in the South Australian on premise market. *Asia Pacific journal of marketing and logistics*, 24(3), 461-481.

Bruwer, J. and Li, E. (2007). Wine-related lifestyle (WRL) market segmentation: demographic and behavioural factors. *Journal of Wine Research*, 18(1) 19-34.

Bruwer, J., Roediger, B., and Herbst, F. (2017). Domain-specific market segmentation: a wine-related lifestyle (WRL) approach. *Asia Pacific Journal of Marketing and Logistics*, 29(1), 4-26.

Brunner, T.A. and Siegrist, M. (2011). A consumer-oriented segmentation study in the Swiss wine market. *British Food Journal*, 113(3), 353-373.

Bryman, A., Bell, E., Hirschsohn, P. Du Toit, J., Dos Santos, A., Wagner, E., van Aardt, I. and Masenge, A. (2016). *Research methodology: Business and Management contexts*. 5th rev. ed. Cape Town: Oxford University Press Southern Africa.

Burgess, S.M. and Steenkamp, J.B.E. (2006). Marketing renaissance: How research in emerging markets advances marketing science and practice. *International Journal of Research in Marketing*, 23(4), 337-356.

Burns, R.P. and Burns, R. (2008). *Business research methods and statistics using SPSS*. Thousand Oaks, CA: Sage.

Burton, G., Carrol, G., and Wall, S. (1999). *Quantitative Methods for Business and Economics*. London: Longman.

Buss, D. M. (1998). Sexual strategies theory: historical origins and current status. *Journal of Sex Research*, 35(1), 19-31.

Byrne, B. M. (1998). *Structural Equation Modeling with LISREL, PRELIS and SIMPLIS: Basic Concepts, Applications and Programming*. Mahwah, NJ: Lawrence Erlbaum Associates.

Byrne, B. M. (2010). *Structural Equation Modelling with AMOS*, (2nd Ed.). New York: Routledge.

Byrne, B. M. (2013). *Structural Equation Modelling with EQS: Basic concepts, applications, and programming.* New York: Routledge.

Canniford, R. (2011). How to manage consumer tribes. *Journal of Strategic Marketing*, 19(7), 591-606.

Cant, M., Machado, R. (2005). *Marketing Success Stories* (fifth ed.), Oxford: Oxford University Press.

Carroll, B. A., and Ahuvia, A. C. (2006). Some antecedents and outcomes of brand love. *Marketing letters,* 17, 79-89.

Castillo-Valero, J.S. and García-Cortijo, M.C. (2015). Price adjustment in world wine markets: A cointegration analysis. *Wine Economics and Policy*, *4*(2), 128-135.

Chang, P. L. and Cheing, M. H. (2006). Building consumer-brand relationship: a cross-cultural experiential view. *Psychology and Marketing*, 23 (11), 927-59.

Chang, H. H. and Liu, Y. M. (2009). The impact of brand equity on brand preference and purchase intentions in the service industries. *Service Industry Journal*, 29 (12), 1687–1706.

Charters, S., Velikova, N., Ritchie, C., Fountain, J., Thatch, L., Dodd, T.H., Fish, N., Herbst, F. and Terblanche, N. (2011). Generation Y and sparkling wines: a cross-cultural perspective. *International Journal of Wine business research*, 23 (2), 161-175.

Chaston, I. (2009). *Boomer marketing*. London: Routledge.

Chaudhuri, A. and Holbrook, M.B. (2001). The chain of effects from brand trust and brand affect to brand performance: the role of brand loyalty. *Journal of marketing*, 65(2) 81-93.

Cheah, I., Phau, I., Kea, G. and Huang, Y.A. (2016). Modelling effects of consumer animosity: Consumers' willingness to buy foreign and hybrid products. *Journal of Retailing and Consumer Services*, 30, 184-192.

Chedi, C.R. (2008). *The influence of brand preference on brand image transfer: A research on brand event congruity in sponsorships* (Master's thesis, University of Twente).

Chen, C. F., and Chang, Y. Y. (2008). Airline brand equity, brand preference and purchase intentions- the moderating effects of switching costs. *Journal of Air Transport Management*, 14, 40-42.

Chen, Y.S. and Chang, C.H. (2012). Enhance green purchase intentions: The roles of green perceived value, green perceived risk, and green trust. *Management Decision*, 50(3) 502-520.

Chen, Y. and Lin, L. S. (2010). Structural equation-based latent growth curve modeling of watershed attribute-regulated stream sensitivity to reduced acidic deposition. *Ecological Modelling*, 221, 2086-2094.

Cheung, G.W. and Rensvold, R.B. (2002). Evaluating goodness-of-fit indexes for testing measurement invariance. *Structural equation modeling*, 9(2), 233-255.

Chi, H., Yeh, H.R. and Tsai, Y.C. (2011). The influences of perceived value on consumer purchase intention: the moderating effect of advertising endorser. *Journal of International Management Studies*, 6(1), 1-6.

Chi, H. K., Yeh, H. R. and Yang, V. T. (2009). The impact of brand awareness on consumer purchase intention: The Mediating Effects of perceived quality and brand loyalty. *Journal of International Management studies*, 4 (1), 135-143.

Chin, W.W. (1998). Issues and opinion on structural equation modelling, *MIS Quarterly*, 22 (1), 7-16.

Chin, W. W. (2010). How to write up and report PLS analyses. In V. Esposito Vinzi, W. W. Chin, J. Henseler, and H. Wang (Eds.), *Handbook of partial least squares: concepts,*

methods and applications in marketing and related fields, 655–690. Berlin, Heidelberg: Springer.

Chinomona, R. (2011). *Non-mediated channel powers and relationship quality: A case of SMES in Zimbabwe channels of distribution*. Unpublished PhD. National Central University, Taiwan, 1-175.

Chinomona, R., Lin, J.Y.C., Wang, M.C.H. and Cheng, J.M.S. (2010). Soft power and desirable relationship outcomes: the case of Zimbabwean distribution channels. *Journal of African Business*, *11*(2), 182-200.

Chinomona, R., Mahlangu, D., and Pooe, D. (2013). Brand Service Quality, Satisfaction, Trust and Preference as Predictors of Consumer Brand Loyalty in the Retailing Industry. *Mediterranean Journal of Social Sciences,* 4 (14)18.

Chiou, J. S., Hsu, A. C. F. and Hsieh, C. H. (2013). How negative online information affects consumers brand evaluation. The moderating effects of brand attachment and source credibility. *Online Information Review*, 37(6), 910-926.

Christ, K. L., and Burritt, R. L. (2013). Critical environmental concerns in wine production: An integrative review. *Journal of Cleaner Production*, 53, 232-242.

Chrysochou, P., Krystallis, A., Mocanu, A. and Leigh Lewis, R. (2012). Generation Y preferences for wine: an exploratory study of the US market applying the best-worst scaling. *British Food Journal*, 114 (4), 516-528.

Collins, H. 2010. *Creative Research: The Theory and Practice of Research for the Creative Industries*. AVA Publications.

Cooper, D. and Greenaway. R. (2015). *Non-probability survey sampling in official statistics*. ONS methodology working paper series, 4.

Corduas, M., Cinquanta, L. and Levoli C. (2013). The importance of wine attributes for purchase decisions: a study of Italian consumers' perception. *Food Quality and Preference,* 28(2), 407-418.

Correia-Loureiro, S.M. and Kaufmann, H. R. (2012). Explaining love of wine brands. *Journal of Promotion Management*, 18(3), 329-343.

Cova, B. and Cova, V. (2002). Tribal marketing: the tribalisation of society and its impact on the conduct of Marketing. *European Journal of Marketing*, 36 (5/6), 595-620.

Cova, B., Kozinets, R. V. and Shakar, A. (2007). *Consumer Tribes*. Oxford: Elsevier.

Cova, B. and Pace, S. (2006). Brand community of convenience products: new forms of customer empowerment- the case of my Nutella my Community *European Journal of Marketing*, 20(9/10), 1087-1105.

Cova, B., and Salle, R. (2008). The industrial / Consumer marketing dichotomy revisited. *Journal of business and Industrial Marketing*, 23(1), 3-11.

Cova, B. and White, T. (2010). Counter-brand and alter-brand communities: the impact of Web 2.0 on tribal Marketing approaches. *Journal of Marketing Management*, 26(3/4), 256-270.

Corduas, M. Cinquanta, L., and Levoli, C. (2013). The importance of wine attributes for purchase: A study of Italian consumer's perception. *Food quality and Preference*, 28, 407-418.

Creswell, J. W. (2009). *Research Design: Qualitative, Quantitative, and Mixed Methods Approaches*. 3rd Edition. Los Angeles: Sage Publications, Inc.

Crosno, J. l., Freling, T. H., and Skinner, S. J. (2009). Does brand social power mean market might? Exploring the influence of brand social power on brand evaluation. *Psychology and Marketing*, 26, 91-121.

Crowther, D., and Lancaster, G. (2009). *Research Methods: A concise introduction to research in Management and Business consultancy*. 2nd ed Oxford: Elsevier.

Curran, P.J. and Hussong, A.M. (2002). Structural equation modeling of repeated measures data: Latent curve analysis. In Moskowitz, D.S. and Hershberger, S.L., eds. *Modeling Intraindividual Variability with Repeated Measures Data: Methods and Applications*. Mahwah, NJ: Lawrence Erlbaum Associates, 59-86.

Cusmano, L., Morrison, A., and Rabellotti, R. (2010). Catching up trajectories in the wine sector: A comparative study of Chile, Italy, and South Africa. *World Development*, 38, 1588-1602.

Delgado, C., Gomez-Rico, A. and Guinard, J. X. (2013). Evaluating bottles and labels versus tasting the oils blind: Effects of packaging and labelling on consumer preferences, purchase intentions and expectations for extra virgin olive oil. *Food research Intentional*, 54, 2112-2121.

Department of Agriculture, Fisheries and Forestry, (2011). *Annual Report*, Pretoria: Department of Agriculture, Fisheries and Forestry.

Desai, K. K. and Raju, S. (2007). Adverse influence of brand commitment on consideration of and preference for competing brands. *Psychology and Marketing*, 24: 595–614.

Dionisio, P., Leal, C. and Moutinho, L. (2008). Fandom affiliation and tribal behaviour: sports marketing applications. *Qualitative Market Research: An international Journal*, 11(1) 17-39.

Dholakia, U. M., Baggozi, R. P., and Pearo, L. (2004). A social influence model of consumer participation in a network- and small-group-based virtual communities. *International Journal of Business Research in Marketing*, 2, 241-263.

Dopico, D.C., Blazquez, F. and Tudoran, A. (2009). *Credibility of Collective Brand as a Source of Equity: An Empirical Application for Spanish Wine Market*. In 113th EAAE Seminar. September 2009.

Drennan, J. Bianchi, C., Elizondo, S. C., Louriero, S., Guibert, N., and Proud, W. (2015). Examining the role of wine brand love on brand loyalty: A multi-country comparison. *International Journal of Hospitality Management*, 49, 47-55.

Duarte, F., Madeira, J. and Barreira, M.M. (2010). Wine purchase and consumption in Portugal-an exploratory analysis of young adults' motives/attitudes and purchase attributes. *Ciência e Técnica Vitivinicola*, 63-73.

Duffy, B., Smith, K., Terhanian, G. and Bremer, J. (2005). Comparing data from online and face-to-face surveys. *International Journal of Market Research*, 47(6), pp. 615-39.

Duh, H. I., (2016). Childhood family experiences and young Generation Y money attitudes and materialism. *Personality and Individual Differences*, *95*, 134-139.

Duh, H. and Struwig, M. (2015). Justification of generational cohort segmentation in South Africa. *International Journal of Emerging Markets*, 10(1), 89-101.

Ebrahim, R., Ghoneim, A., Irani, Z. and Fan, Y. (2016). A brand preference and repurchase intention model: the role of consumer experience. *Journal of Marketing Management*, 32 (13-14), 1230-1259.

Ebrahim, R.S. (2013). *A study of brand preference: An experiential view* (Doctoral dissertation, Brunel University Brunel Business School PhD Theses).

Einwiller, S. A., Fedorikhin, A., Johnson, A. R., and Kamins, M. A. (2006). Enough is enough! When identification no longer prevents negative corporate associations. *Journal of Academy of Marketing Science*, 34, 185-194.

Elbedweihy, A. M., Jayawardhena, C., Elsharnouby, M. H., and Elsharnouby, T. M. (2016). Customer relationship building: The role of brand attractiveness and consumer-brand identification. *Journal of Business Research*, 69(8), 2901-2910.

Elliott, R. and Yannopoulou, N. (2007). The nature of trust in brands: a psychosocial model. *European Journal of Marketing*, 41(9/10) 988-998.

Engelbrecht, A. Herbst, J F. and Bruwer, J. (2014). Region-of-origin (ROO) certification as marketing strategy in the South African wine market. *International Journal of Wine Business Research*, 26(2), 139-162.

Engelbrecht, J. A., Herbst, F., and Bruwer, J. (2014). Region-of-origin (ROO) certification as marketing strategy in the South African wine market. *International Journal of wine business research*, 26 (2), 139-162.

Erdem, T., and Swait, J. (2004). Brand credibility brand consideration and choice. *Journal of Consumer Research*, 31, 191-198.

Erdem, T., and Swait, J. (1998). Brand equity as a signalling phenomenon *Journal of Consumer Research*, 147-58.

Erdem, T., Swait, J. and Louviere, J. (2002). The impact of brand credibility on consumer price sensitivity. *International Journal of research in Marketing*, 19, 1-19.

Erdem, T., Swait, J. and Valenzuela, A. (2006). Brands as signals: A cross-country validation study. *Journal of Marketing*, 70(1), 34-49.

Erdogan, B.Z. and Drollinger, T. (2008). Endorsement practice: How agencies select spokespeople. *Journal of advertising research*, *48*(4), 573-582.

Esch, F.R., Langner, T., Schmitt, B.H. and Geus, P. (2006). Are brands forever? How brand knowledge and relationships affect current and future purchases. *Journal of Product & Brand Management*, 15(2), 98-105.

Esmaeilpour, F. (2015). The role of functional and symbolic brand associations on brand loyalty, *Journal of Fashion Marketing and Management*, 19, (4), 467-484.

Euromonitor International, (2017). Euromonitor International. [Online] Available at: http://blog.euromonitor.com/search-results?keywords=alcoholic+drinks [Accessed 21 September 2017].

Feldstein, A. P. (2007). *Brand communities in a world knowledge –based products and common property*. Presented at MiT5: creativity, ownership and collaboration in the digital age. Lubin School of Business Pace University. New York, N.Y.10038.

Felzensztein, C. (2005). *The influences of geographical co-location and social networking in inter-firm cooperation in marketing: a cross country analysis* (Doctoral Thesis Doctoral, University of Strathclyde, Scotland).

Fehr, B. (1993). How do I love thee? Let me consult my prototype in Duck, S. (Ed.), *Individuals in Relationships*, Newbury, CA: Sage Publications. Newbury, CA. 87-120.

Fetscherin, M. (2014). What type of relationship do we have with loved brands? *Journal of Consumer Marketing*, 31 (6/7), 430- 440.

Fetscherin, M., Boulanger, M., Souki, G. Q., and Filho, C. G. (2014). The effect of product category on consumer brand relationships. *Journal of Product & Brand Management*, 23(2), 78-89.

Filho, C.G., Monteiro, P.R R., and Souki, G, Q. (2010). *The Impacts of Brand Love, Brand Equity in the Consumer's Loyalty and the Customer's Purchase Intentions: The Development and Testing of Alternative Models in the Automotive Sector*. 25-29 September 2010. EnANPAD Rio Janeiro. xxiv Brazil.

Fırat, A.F. and Dholakia, N. (2006). Theoretical and philosophical implications of postmodern debates: some challenges to modern marketing. *Marketing theory*, 6(2), 123-162.

Florack, A. and Scarabis, M. (2006). How advertising claims affect brand preferences and category brand associations: the role of regulatory fit. *Psychology and Marketing* 23(9):741-755.

Folse, J.A.G., Burton, S. and Netemeyer, R.G. (2013). Defending brands: Effects of alignment of spokescharacter personality traits and corporate transgressions on brand trust and attitudes. *Journal of Advertising*, 42(4), 331-342.

Forbes, S. L. (2012). The influence of gender on wine purchase and consumption. An exploratory study across four nations. *International Journal Wine business research*, 24 (2), 146-159.

Fornell, C. and Larcker, D.F. (1981). Evaluating structural equation models with unobservable variables and measurement error", *Journal of Marketing Research*, 27(1), 39-50.

Fountain, J. and Lamb, C. (2011). Generation Y as young wine consumers in New Zealand: how do they differ from Generation X? *International Journal of Wine Business Research*, 23(2), 107-124.

Fournier, S. (1998). Consumers and their brands: developing relationship theory in consumer research. *Journal of Consumer Research*, 24(4), 343-73.

Foxcroft, M. (2009). Growing the consumption of wine amongst emerging market consumers in South Africa. *Cape Wine Dissertation, January*.

Fraering, M., and Minor, M. S. (2006). Sense of community: An exploratory study of US consumers of financial services. *International Journal of Bank Marketing*, 24(5), 284-306.

Fullerton, G. (2005). How commitment both enables and undermines marketing relationships. *European Journal of Marketing*, 39(11/12), 1372-1388.

Garg, R., Mukherjee, J., Biswas, S. and Kataria, A. (2015). An investigation of antecedents and consequences of brand love in India. *Asian Pacific Journal of Business*, 7(3), 174-196.

Gilaninia, S., Ganjinia, H., Moridi, A. and Rahimi, M. (2012). The differential roles of brand credibility and brand prestige in the customers' purchase intention. *Kuwait Chapter of the Arabian Journal of Business and Management Review* 2, (4) 1-9.

Gill, J. and Johnson, P. (2010). *Research Methods for Managers*. 4th ed. Thousand Oaks, CA: Sage.

Giuliani, E., Morrison, A., Pietrobelli, C. and Rabellotti, R. (2010). Who are the researchers that are collaborating with industry? An analysis of the wine sectors in Chile, South Africa and Italy. *Research Policy*, 39(6), 748-761.

Goldsmith, R.E., Lafferty, B.A., and Newell, S.J. (2000). The Impact of Corporate Credibility and Celebrity Credibility on Consumer Reaction to Advertisements and Brands. *Journal of Advertising*, 29 (3), 43.

Goulding, C., Shankar, A., and Canniford, R. (2013). Learning to be tribal: facilitating the formation of consumer tribes. *European Journal of Marketing*, 47 (5/6), 813-832.

Grafström, A. (2010). Entropy of unequal probability sampling designs. *Statistical Methodology*, *7*(2), 84-97.

Grappi, S., and Montanari, F. (2011). The role of social identification and hedonism in affecting tourist re-patronizing behaviour: The case of an Italian festival. *Tourism Management* 32, 1128-1140.

Garry, T., Broderick, A. J. and Lahiffe, K. (2008). Tribal motivation in sponsorship and its influence on sponsor relationship development and corporate identity. *Journal of Marketing Management,* 24(9/10), 959-977.

Giuliani, E., Morrison, A., Pietrobelli, C. and Rabellotti, R. (2010). Who are the researchers that are collaborating with industry? An analysis of the wine sectors in Chile, South Africa and Italy. *Research Policy*, 39(6), 748-761.

Gunay, G. N, and Baker, M. J. (2011). The factors influencing consumers' behaviour on wine consumption in the Turkish wine market. *Euromed Journal of Business*, *6*(3), 324-341.

Guney, B. and Richter, M. (2015). An experiment on aspiration based choice. *Journal of economic behaviour and organisation*, 119, 512-526.

Guney, B. Richter, M., Tsur, M., and Tsur, M. (2011). *Aspiration- Based Choice theory*. *Manuscript, NYU*.

Haas, S. M. (2007). Evaluating Brand Relationships in the Context of Brand Communities. School of Saint Louis University in Partial.

Halilovic, D. (2013). *Crazy little thing called brand love! Exploring the influence of brand love on brand equity* (Master's thesis, University of Twente).

Halkias, G. Davvetas, V. and Diamantopoulos, A. (2016). The interplay between country stereotypes and perceived brand globalness/localness as drivers of brand preference. *Journal of Business Research*, 69, 3621-3628.

Hair, J.F., Black, W.C., Babin, B.J. and Anderson, R.E. (2010). *Multivariate data analysis, a global perspective*. 7 th ed. Upper Saddle River, New Jersey: Pearson Prentice Hall.

Hair, J.F., Bush, R. P. and Ortinau, D. J. (2009). *Marketing research: Within a changing Information environment.* Cape Town*:* Juta and Company.

Hair Jr, J.F., Hult, G.T.M., Ringle, C. and Sarstedt, M. (2016). *A primer on partial least squares structural equation modeling (PLS-SEM).* Thousand Oaks, CA: Sage Publications.

Haque, A. Anwar, N, Yasmin, F. Sarwar, A. Ibrahim and Momen, A. (2015). Purchase Intention of foreign products: A study on Bangladeshi Consumer perspective. Thousand Oaks, CA: Sage open 1-12.

Hashem, T.N. (2016). *The influence of cause related marketing (crm) on the brand image among consumers in Jordan*. In 9th Annual Conference of the EuroMed Academy of Business. September.

Hawkins D.I., and Mothersbaugh D.L. (2010*). Consumer behaviour: building marketing strategy*. (11th ed.) New York: McGraw-Hill/Irwin.

He, Y., Gai, Y., Wu, X. and Wan, H. (2012). Quantitatively analyze composition principle of Ma Huang Tang by structural equation modelling. *Journal of Ethnopharmacology*, 143:851-858.

Healy, M. J., and Beverland, M. B. (2016). Being sub-culturally authentic and acceptable to the mainstream: Civilizing practices and self- authentication. *Journal of Business Research* 69, 224-233.

Heinrich, D., Albrecht, C. M. and Bauer, H. H. (2012). Love actually? Measuring and exploring consumers' brand love. *Consumer-brand relationships theory and practice*, 137-150.

Herbst, F.J. and Von Arnim, C. (2009). The role and influence of wine awards as perceived by the South African wine consumers. *Acta Commercii*, 9(1), 90-101.

Hernandez, B., Jimenez, J. and José Martin, M. (2010). Business management software in high-tech firms: the case of the IT services sector. *Journal of Business & Industrial Marketing*, 25(2) 132-146.

Heslop, L. A. Cray, D. and Armenakyan, A. (2010). Cue incongruity in wine personality formation and purchasing. *International Journal of wine business research*, 22 (3), 228-306.

Heyns, E., Herbst, F. and Bruwer, J. (2014). The relevance and acceptance of green wines in South Africa: some marketing insights. *Journal of wine research*, *25*(4), 243-264.

Hogg, M. A., Terry, D. J. and White, K. M. (1995). A tale of two theories: A critical comparison of identity theory with social identity theory. *Social Pychology quarterly*, 58(4).

Howard, D., and Kerin, R. (2013). A surname brand effect explanation for consumer brand preference and advocacy. *Journal of Product & Brand Management*, 22 (5/6), 362 – 370.

Hollebeek, L. D., Jaeger, S. R. Brodie, R. J. and Balemi, A. (2007). The influence of involvement on purchase intention for new world wine. *Food quality and preference*, 18, 1033-1049.

Hooper, D., Coughlan, J., and Mullen, M. (2008). Structural equation modelling: Guidelines for determining model fit. *Electronic Journal of Business Research Methods*, *6*(1), 53-60.

Howard, D. and Kerin, R. (2013). A surname brand effect explanation for consumer brand preference and advocacy. *Journal of Product & Brand Management*, 22(5/6), 362-370.

Hsu, S.H. (2008). Developing an index for online customer satisfaction: Adaptation of American Customer Satisfaction Index. *Expert systems with Applications*, 34(4), 3033-3042.

Hu, L. T., and Bentler, P. M. (1999). Cut off criteria for fit indexes in covariance structure analysis: Conventional criteria versus new alternatives. *Structural equation modeling: A multidisciplinary journal*, 6(1), 1-55.

Hu, X., Li, L., Xie, C. and Zhou, J. (2008). The effects of country-of-origin on Chinese consumers' wine purchasing behaviour. *Journal of Technology Management in China*, 3(3), 292-306.

Huang, T. Y., Hu, J. S., and Wu, W. R. (2013). The Strategy of Spokes characters in Consumption Experience and Brand Awareness. *Storage Management Solutions*, (2), 36-64.

Huber, F., Meyer, F., and Schimid, D. A. (2015). Brand love in progress- the interdependence of brand love antecedents in consideration of relationship duration. *Journal of Product and Brand Management*, 24(6), 567-579.

Hulland, J. (1999). Use of partial least squares (PLS) in strategic management research: A review of four recent studies. *Strategic management journal*, 195-204.

Hung, H.Y. (2014). Attachment, identification, and loyalty: Examining mediating mechanisms across brand and brand community contexts. *Journal of Brand Management*, 21(7-8) 594-614.

Hussain, M., Cholette, S. and Castaldi, R.M. (2008). An analysis of globalization forces in the wine industry: implications and recommendations for wineries. *Journal of Global Marketing*, 21(1), 33-47.

Hwang, J. and Kandampully, J. (2012). The role of emotional aspects in younger consumer-brand relationships. *Journal of Product and Brand Management*, 21 (2) 98 – 108.

Hwang, J. and Ok, C. (2013). The antecedents and consequence of consumer attitudes toward restaurant brands: A comparative study between casual and fine dining restaurants. *International Journal of Hospitality Management*, 32, 121-131.

Imalawi, J., Gregg, D., and Karimi, J. (2015). Student engagement in course –based Social networks: The impact of instructor credibility and use of communication. *Computers and Education* 88, 84-96.

Ismail, A. J., and Spinelli, G. (2012). Effects of brand love, personality and image on word of mouth. *Journal of Fashion Marketing and Management: An international Journal*, 16 (4), 386- 398.

Iyer, P. P., Paswan, A. K., and Davari, A. (2016). Brands, love and family. *Journal of Product and Brand Management*, 25(1), 69-83.

Javalgi, R. R. G., and Grossman, D. A. (2016). Aspirations and entrepreneurial motivations of middle –class consumers in emerging markets: The case of India. *International Business Review*, 25(3), 657-667.

Jaydeep, R. G., Biswas, M. S., and Kataria, A. (2015). An investigation of antecedents and consequences of brand love in India. *Asia- Pacific Journal of Business Administration*, 7 (3), 174-196.

Jeng, S. P. (2016). The influences of airline brand credibility on consumer purchase intentions. *Journal of Air Transport Management*, 55, 1-8.

Jiménez, N.H. and San Martín, S. (2010). The role of country-of-origin, ethnocentrism and animosity in promoting consumer trust. The moderating role of familiarity. *International Business Review*, 19(1), 34-45.

Jin, N. P., Lee, S. S and Jun, J. H. (2015). The role of brand credibility in predicting consumers' behavioural intentions in luxury restaurants. *International Journal of Tourism and Hospitality Research*, 26(3), 384-396.

Johnson, T. J. and Kaye, B. K. (2016). Some like it lots: The influence of interactivity and reliance on credibility. *Computer in Human Behaviour*, 61, 136-145.

Jurisic, B. and Azevedo, A. (2011). Building customer-base relationships in the mobile communications marketing: the role of brand tribalism and brand reputation. *Brand Management*, 18(4/5), 349-366.

Kaufmann, H.R., Kaufmann, H.R., Loureiro, S.M.C., Loureiro, S.M.C., Manarioti, A. and Manarioti, A. (2016). Exploring behavioural branding, brand love and brand co-creation. *Journal of Product & Brand Management*, 25(6), 516-526.

Kallas, Z. Escobar, C. and Gil, J. M. (2013). Analysis of consumer's preferences for a special-occasion red wine: A dual response choice experiment approach. *Food quality and preference*, 30, 156-168.

Kanning, U. P., and Bergmann, N. (2009). Predictors of customer satisfaction: testing the classical paradigms. *Managing Service Quality*: *An International Journal*, 19(4), 377-390.

Kang, A. (2015). Brand Love – Moving Beyond Loyalty: An Empirical Investigation of Perceived Brand Love of Indian Consumer. *Arab economics and business journal* 10, 90-101.

Kaplan, D. (2009). *Structural equation modeling*: foundations and extensions (2nd ed.). Los Angeles: SAGE.

Karjaluoto, H., Munnukka, J. and Kiuru, K. (2016). Brand love and positive word of mouth: the moderating effects of experience and price. *Journal of product and brand management*, 25 (6), 527-537.

Kazemi, A., and Borandegi, F. 2013. Analysing the Antecedents and Consequences of Brand Love with a Case Study on Apple cellphone Users. *International Journal of Academic Research in Business and Social Sciences*, 3(11), 320.

Keh, H.T., Pang, J. and Peng, S. (2007). *Understanding and measuring brand love*. In Society for Consumer Psychology Conference Proceedings, Santa Monica 84-88). June

Keller, K.L. (2001). *Building customer-based brand equity: A blueprint for creating strong brands.*

Kemp, E. and Bui, M. (2011). Healthy brands: establishing brand credibility, commitment and connection among consumers. *Journal of Consumer Marketing*, 28(6), 429-437.

Kennedy L. (2001). The Up and Coming Generation. *Retailing Merchandise*, 41 (8), 66.

Khan, I., Ghauri, T.A. and Majeed, S. (2012). Impact of brand related attributes on purchase intention of customers: A study about the customers of Punjab, Pakistan. *Interdisciplinary Journal of Contemporary Research in Business*, 4(3), 194-200.

Kierath, T. and Wang, C. (2013). The Global Wine Industry, Slowly Moving from Balance to Shortage. *Morgan Stanley Research, London*.

Kim, D. H., and Jang, S. S. (2014). Motivational Drivers for status consumption: A study of Generation Y consumer. *International Journal of Hospitality Management*, 38, 39-47.

Kim, S. and Pysarchik, D., T. (2000). Predicting purchase intentions for uni-national and bi-national products. *International Journal of Retail & Distribution Management*, 28(6), 280-291.

Kim, J. Y., Spiro, K., and Molleda, J, C. (2015). Use of affect in blog communication: Trust, credibility and Authenticity. *Public relations review*, 41, 504-507.

Kirkman, A. (2010). *The role of wine tourism in the marketing of wineries in the Stellenbosch wine route of South Africa*. (Doctoral dissertation). Stellenbosch University.

Kline, R. (2005). *Principles and practices of structural equation modelling* 2nd ed. New York: Guilford Press.

Kline, R.B. (2011). *Principles and practice of structural equation modeling*, 3rd ed. New York: Guildford Press.

Koppelaar, G.W. (2014). *Consumer-Centered Marketing. Consumer-brand relationships: motivational antecedents for participation in online brand communities and the consequences for brands and online brand communities, a cross-cultural perspective* (Master's thesis) University of Twente.

Kotler, P. and Keller, K.L. (2013). *Marketing Management*. 14th ed. London: Pearson.

Kotler, P. and Keller, K.L. (2012). *Marketing Management*, 5th ed., London: Pearson.

Kressmann, F., Sirgy, M. J., Herrmann, A., Huber, F., Huber, S. and Lee, D. J. (2006). Direct and indirect effects of self-image congruence on brand loyalty. *Journal of Business Research*, 59 (9), 955-64.

Kruger, S., DuToit, A. and Ponte, S. (2006). *De-racializing exploitation: 'Black Economic Empowerment' in the South African wine sector* 34. DIIS Working Paper.

Kucukemiroglu, O. (1999). Market segmentation by using consumer lifestyle dimensions and ethnocentrism: An empirical study. *European Journal of Marketing*, 33(5/6), 470-487.

Kuikka, A., and Laukkanen, T. (2012). Brand loyalty and the role of hedonic value. *Journal of Product and Brand Management*, 21(7), 529-537.

Lafferty, B. A. (2007). The relevance of fit in a cause- brand alliance when consumers evaluate corporate credibility. *Journal of Business Research*, 60, 447-453.

Lafferty, B. A., and Goldsmith, R. E. (1999). Corporate credibility's role in consumers' attitudes and purchase intentions when a high versus a low credibility endorser is used in the ad. *Journal of business research*, 44(2), 109-116.

Langner, T., Schmidt, J. and Fischer, A. (2015). Is it really love? A comparative investigation of the emotional nature of brand and interpersonal love, *Psychology and Marketing*, 32 (6) 624-634.

Lategan, B.W., Pentz, C.D., and du Preez, R. (2017). Importance of wine attributes: a South African Generation Y perspective. *British Food Journal*, 119(7), 1536-1546.

Laverie, D. A., Humphrey, W. F., Velikova, N., Dodd, T., M., and Wilcox, J. B. (2011). *Building Wine Brand Communities with the Use of Social Media*. 6th AWBR International conference. Bordeaux Management School. 9-10 June.

Le, A.N.H., Cheng, J.M.S., Kuntjara, H. and Lin, C.T.J. (2014). Corporate rebranding and brand preference. *Asia Pacific Journal of Marketing and Logistics*, 26(4), 602.

Lieven, T., Grohmann, B., Herrmann, A., Landwehr, J.R. and van Tilburg, M. (2015). The effect of brand design on brand gender perceptions and brand preference. *European Journal of Marketing*, 49(1/2) 146-169.

Lim, Y. J., Osman, A., Salahuddin, S. N., Romle, A. R., and Abdullah, S. (2015). Factors influencing online shopping behaviour: The Mediating Role of Purchase Intention. *Procedia Economics and Finance*, 35, 401-410.

Lin, X., Spence, P. R., and Lanchlan, K. A. (2016). Social media and credibility indicators: The effect of influence cues. *Computers in Human Behaviour*, 63, 264-271.

Livingstone, A. C., and McCafferty, S. (2015). Explaining reactions to normative information about alcohol consumption: A test of an extended social identity model. *International Journal of Drug Policy*, 26, 388-395.

Lu, L. C., Chang, W. P., and Chang, H. H. (2014). Consumer attitudes toward blogger's sponsored recommendations and purchase intention: The effect of sponsorship type, product type and brand awareness. *Computers in Human Behaviour*, 34, 258-266.

Long-Tolbert, S. J., and Gammoh, B. S. (2012). In good and bad times: the interpersonal nature of brand love in service relationships. *Journal of Services Marketing*, 26 (6), 391 – 402.

Loureiro, S.M.C. and Kaufmann, H.R. (2016). Luxury values as drivers for affective commitment: The case of luxury car tribes. *Cogent Business & Management*, *3*(1), 117-192.

Loureiro, S. M. C., Ruediger, K. H. and Demetris, V. (2012). Brand emotional connection and loyalty. *Journal of Brand Management*, 20 (1) 13-27.

Lu, L.C., Chang, W.P. and Chang, H.H. (2014). Consumer attitudes toward blogger's sponsored recommendations and purchase intention: The effect of sponsorship type, product type, and brand awareness. *Computers in Human Behavior*, 34, 258-266.

Malhotra, N.K. (2015). *Essentials of marketing research: A hands-on orientation*. Essex: Pearson.

Malik, M.E., Ghafoor, M.M., Hafiz, K.I., Riaz, U., Hassan, N.U., Mustafa, M. and Shahbaz, S. (2013). Importance of brand awareness and brand loyalty in assessing purchase intentions of consumer. *International Journal of Business and Social Science*, 4(5).

Malik, M. S. and Ahmad, N. (2014). Impact of brand credibility on consumer loyalty a case study of fast food industry in DG Khan, Pakistan. *Arabian Journal of Business Management review*, 3(6), 38-47.

Marinelli, N., Fabbrizzi, S., Sottini, V.A., Sacchelli, S., Bernetti, I. and Menghini, S. (2014). Generation Y, wine and alcohol. A semantic differential approach to consumption analysis in Tuscany. *Appetite*, 75, 117-127.

Mashamwa, V. (2016). Brand Endorsements: A Study into the opportunity of using spokes-characters as brand endorsers. *Business and Social Sciences Journal*. 1(1), 67-90.

Maxian, W., Bradley, S.D., Wise, W. and Toulouse, E.N. (2013). Brand love is in the heart: Physiological responding to advertised brands. *Psychology & Marketing*, 30(6), 469-478.

McAlexander, J. H., Koenig, H. F., and Schouten, J. W. (2006). *Building Relationships of brand community in higher education: A strategic Framework for University Advancement.*

McDonald, R., and Ho, M. (2002). Principles and practice in reporting structural equation analyses. *International Journal of Educational advancement*, 6(2), 107-118).

McLaughlin, C. (2016). Source Credibility and Consumers' Responses to Marketer Involvement in Facebook Brand Communities: What Causes Consumers to Engage? *Journal of Interactive Advertising*, 16(2), 101-116.

Meir, R. (2008). Tribalism: Attracting fans in a fragmented market. In: S. Chadwick & D. Arthur (Eds.), *International Cases in the Business of Sport*. London: Elsevier Publishing. Chapter 14, 192-204.

Meir, R., and Scott, D. (2007) Tribalism: Definition, identification and relevance to the marketing of professional sport franchises. *International Journal of Sport Marketing and Sponsorship*, 8(4), 330-346.

Meyer, J.P., Stanley, D.J., Herscovitch, L. and Topolnytsky, L. (2002). Affective, continuance, and normative commitment to the organization: A meta-analysis of antecedents, correlates, and consequences. *Journal of Vocational Behaviour* 61 (1), 20–52.

Miller, R. L., and Brewer, J. D. (2003). *A-Z of Social Research*. London: Longman

Mirabi, V. Akbariyeh, H. and Tahmasebifard, H. (2015). A study of factors affecting on customers Purchase Intention Case study: the agencies of Bono brand tile in Tehran. *Journal of Multidisciplinary Engineering Science and Technology,* 2 (1), 267-273.

Mishra, A. (2016). Attribute-based design perceptions and consumer-brand relationship: Role of user expertise. *Journal of Business Research*, 69, 5983–5992.

Mitchell, C. and Imrie, B. C. (2011). Consumer tribes: membership, consumption and building loyalty, consumption and building loyalty. *Asia Pacific Journal of Marketing and logistics*, 23 (1), 39-56.

Mohammadian, M., and Karimpour, Y. (2014). Identifying the factors influences the feeling of love toward a brand: the Adidas case, *Switzerland Research Park Journal*, 103 (1), 94-124.

Mohebi, M.M. and Khani, N. (2014). Structural Pattern of Relationship between Brand Awareness, Brand Attachment, Brand Experience, Brand Loyalty, Brand Equity, Brand Preference and Intention to Purchase. *Applied mathematics in Engineering, Management and Technology*, 2(5), 288-299.

Morgan- Thomas, A., and Veloutsou, C. (2013). Beyond technology acceptance: brand relationships and online brand experience. *Journal of Business research*, 66 (1), 21-27.

Moussa, S. (2015). I may be a twin but I'm one of a kind: Are brand attachment and brand love different names for the same construct? *Qualitative Market Research: An international Journal*, 18 (1), 69-85.

Moutinho, L., Dionisio, P., and Leal, C. (2007). Surf tribal behaviour: a sports marketing application. *Marketing Intelligence and Planning*, 25(7), 668-690.

Morwitz, V.G., Steckel, J.H. and Gupta, A. (2007). When do purchase intentions predict sales? *International Journal of Forecasting*, *23*(3), 347-364.

Mozell, M.R. and Thach, L., (2014). The impact of climate change on the global wine industry: Challenges and solutions. *Wine Economics and Policy*, 3(2), 81-89.

Mueller, S. and Szolnoki, G. (2010). The relative influence of packaging, labelling, branding and sensory attributes on liking and purchase intent: Consumers differ in their responsiveness. *Food quality and preference*, 21(7), 774-783.

Mulaik, S.A., James, L.R., Van Alstine, J., Bennett, N., Lind, S. and Stilwell, C.D. (1989). Evaluation of goodness-of-fit indices for structural equation models. *Psychological bulletin*, 105(3), 430.

Mulyanegara, R.C., Tsarenko, Y. and Anderson, A. (2009). The Big Five and brand personality investigating the impact of consumer personality on preference towards particular brand personality. *Journal of Brand Management*, 16 (4), 234-247.

Muniz, A.M. and O'Guinn, T.C. (2001). Brand community. *Journal of consumer research*, *27*(4) 412-432.

Nevitt, J. and Hancock, G.R. (2000). Improving the root mean square error of approximation for nonnormal conditions in structural equation modeling. *The Journal of Experimental Education*, 68(3), 251-268.

Ndanga, L.Z.B. (2009). *Increasing domestic consumption of South African wines: Exploring the market potential of the emerging Black middle class* (Doctoral dissertation).

Ndanga, L.Z., Louw, A. and van Rooyen, J. (2009). *Increasing domestic consumption of South African wines: identifying the key market segments of the "Black Diamonds"* (No. 53884). South Africa [Online] Available at http://purl.umn.edu/53884. [Accessed5/05/2016].

Newton, S. (2010). *Sparkling Wine: The Growth of this Category of Wine in South Africa*.

Ngamkroeckjoti, C., Lou, X. B., Kijboonchoo, T. (2011). *Determinant factors of Purchase Intention: A case study of imported wine in the city of Hangzhou*. International Conference on Management, Economics and Social Science, Bangkok December.

Nimon, S. (2007). Generation Y and higher education: The 'other' Y2K. *Journal of Institutional research.* 13 (1), 24–41.

Noble, S.M., Haytko, D.L. and Phillips, J., (2009). What drives college-age Generation Y consumers? *Journal of business research*, 62(6), 617-628.

Nobre, H. (2011). Should consumers be in love with brands? An investigation into the influence that specific consumer brand relationships have on the quality of the bonds that consumers develop with brands. *Journal of Transnational Management*, 16 (4), 270-281.

Nusair, K., and Hua, N. (2010). Comparative assessment of structural equation modeling and multiple regression research methodologies: E-commerce context. *Tourism Management*, 31(3), 314-324.

Oates, B. J. (2006). *Researching Information systems and Computing*. London: Sage.

O'Cass, A. and Siahtiri, V. (2013). In search of status through brands from Western and Asian origins: Examining the changing face of fashion clothing consumption in Chinese young adults. *Journal of Retailing and Consumer Services*, *20*(6), 505-515.

Opperman, C. (2010). *Investigating the marketing of South African wine amongst the emerging black market of South Africa* (Doctoral dissertation) Stellenbosch University.

Ortiz, M. H., and Harrison, M. P. (2011). Crazy little thing called love: A consumer-retailer relationship. *Journal of Retailing and Consumer Services* 19(2): 218–228.

Pallant, J. (2013). *SPSS survival manual*. London: McGraw-Hill Education (UK).

Park, C. W., MacInnis, D.J., Priester, J., Eisingerich, A.B. and Iacobacci, D. (2010). Brand attachment and brand attitude strength: Conceptual and empirical differentiation of two critical brand equity drivers. *Journal of marketing*, 74(6) 1-17.

Pawle, J. and Cooper, P. (2006). Measuring emotion—Love marks, the future beyond brands. *Journal of Advertising Research*, 46(1), 38-48.

Peskett, S. (2006). Under-30s are the big spenders in UK market. *Harpers*, 10, 26.

Plessis, L., Berndt, A., and Petzer, D. (2009). The attitude of Generation Y students at a South African university towards supporting charitable organisations. *Global Business Technology Association* 1–11.

Pomarici, E. and Vecchio, R. (2014). Millennial generation attitudes to sustainable wine: an exploratory study on Italian consumers. *Journal of Cleaner Production*, 66, 537-545.

Priilaid, D. A. (2006). Wine placebo effect. How the extrinsic cues of visual assessments mask the intrinsic quality of South African red wine. *International Journal of Wine Marketing*, 18 (1), 17-32.

Qasem, A., Baharun, R. and Yassin, A. (2016). The Role of Extrinsic Product Cues in Consumers' Preferences and Purchase Intentions: Mediating and Moderating Effects. *TEM Journal-technology education management informatics*, 5(1), 85-96.

Qureshi, S.M., and Kang, C.W. (2014). Analysing the organisational factors of project complexity using structural equation modelling. *International Journal of Project Management*. [Online]. Available at: <http://dx.doi.org/10.1016/j.ijproman. Accessed 27 August 2017.

Rahman, M. S., Haque, M. M. and Khan, A. H. (2012). A conceptual study on consumers purchase Intention of broadband services: Service quality and experience economy perspective. *International Journal of Business Management*, 7 (18), 115-129.

Raj, Sasikumar, Sriram, S. (2013). A study on customer brand preferences in SUVs and MUVs: effect of Marketing mix variables. *Journal of Arts, Science and Commerce*, 4 (1).

Rajshekhar, R. G. J., and Grossman, D. A. (2016). Aspirations and entrepreneurial motivations of middle- class consumer in emerging markets: The case of India. *International Business review*.

Ranjbarian, B., Borandegi, F., Taherfar, A., and Ranjbari, M. *How to increase the feeling of love towards a brand; examining the impact of brand attachment, brand familiarity and brand prestige.*

Rauschnabel, P. A., and Ahuvia, A.C., (2014). You're so lovable: Anthropomorphism and brand love. *Journal of Brand Management*, 21(5), 372-395.

Reynolds, D., Taylor, J. and Ruetzler, T. (2013). *Wine Purchase intentions: A push-pull study of external drivers, internal drivers and personal involvement*. American association of wine economists' 2013 Annual conference.

Richardson, C. W. J. (2012). Consumer demographics as antecedents in the animosity model of foreign product purchase. *International Journal of Business and Social Science*, 3 (4), 13-21.

Richter, M. (2011). Choice Theory via equivalence. *Social Choice and Welfare* 2, 235–282.

Rifon, N.J., Choi, S.M., Trimble, C.S. and Li, H. (2013). Congruence effects in sponsorship: The mediating role of sponsor credibility and consumer attributions of sponsor motive. *Journal of Advertising*, 33(1) 30-42.

Rizwan, M., Qayyum, M., Qadeer, W. and Javed, M. (2014). The impact on branded product on consumer purchase intentions. *Journal of public Administration and Governance*, 4(3), 57-74.

Robertson, R. (1994). Globalisation or glocalisation? Journal of International Communication, 1 (1), 33-52.

Rodrigues, P. and Reis, R. (2013). *The Influence of "Brand Love" In Consumer Behavior– The Case of Zara and Modalfa Brands*. In 22nd International Business Research Conference 1-9.

Romanuik, J. (2013). What's (brand) love got to do with it? *International Journal of Market Research*, 55(2), 185-186.

Roy, S. K., Eshghi, A., and Sarkar, A. (2013). Antecedents and consequences of brand love. *Journal of Brand Management*, 20(4), 473-493.

Ruane, L., and Wallace, E. (2015). Brand tribalism and self-expressive brands: Social influences and brand outcomes. *Journal of Product and Brand Management*, 24(4), 333-348.

Rupert, B. (2000). Social Identity Theory; past achievements, current problems and future challenges. *Europe Journal of Social Psychology*, 30,745-778.

Ryan, C., McLoughlin, D., and Keating, A. (2006). Tribe spotting: a semiotic analysis of the role of consumption in the tribes of Trainspotting. *Journal of Consumer behaviour*, 5, 431-441.

Salmon, D.N. (2008). Reference Groups: Aspirational and Non Aspirational Groups in Consumer Behavior. *XULAneXUS: Xavier University of Louisiana's Undergraduate Research Journal*, 1-8.

Santini, C., Cavicchi, A. and Casini, L. (2013). Sustainability in the wine industry: key questions and research trendsa. *Agricultural and Food Economics*, 1(1), 9.

Sarstedt, M., Ringle, C.M., Smith, D., Reams, R. and Hair, J.F. J R. (2014). Partial least squares structural equation modeling (PLS-SEM): A useful tool for family business researchers. *Journal of Family Business Strategy*, 5 (1), 105-115.

Sarkar, A. (2014). Brand love in an emerging market: a qualitative investigation. *Qualitative Market research: An international Journal*, 17(4), 481-494.

Sarkar, A. and Sreejesh, S. (2014). Examination of the roles played brand love and jealousy in shaping customer engagement. *Journal of Product and Brand Management*, 23 (1), 24-32.

Sasmita, J. and Mohd Suki, N. (2015). Young consumers' insights on brand equity: Effects of brand association, brand loyalty, brand awareness, and brand image. *International Journal of Retail & Distribution Management*, 43(3) 276-292.

Saunders, M., Lewis, P., and Thornhill, A. (2009). *Research Methods for business students*. 5th ed. London: Prentice Hall.

SAWIS (2015a). 2015. South African Wine industry statistics. Available online from htttp://sawis.co.za/info/download/book_2015eng_final.pdf Accessed [25 May 2016].

SAWIS 2015 (2015b). 2015. Macro impact of the wine industry of the South African economy. Available online from http://sawis.co.za/infor/download/Macro-economic impact_study_final report version 4 Accessed [25 May 2016].

South African Wine Industry Statistics, (2011). SAWIS: SA Wine Industry, Cape Town: South African Wine Industry Statistics. [online] http://sawis.co.za/infor/download/Macro-economic. Accessed [25/05/2016].

Sekaran, U. and Bougie, R. (2010). *Research methods for business*, 5th ed. Brighton: John Wiley and Sons.

Sierra, J. J., Badrinarayanan, V. A. and Taute, H. A. (2016). Explaining behaviour in brand communities: A sequential model of attachment, tribalism and self-esteem. *Computers in Human Behaviour*, 55.

Scarpi, D. (2010). Does size matter? An examination of small and large web-based brand communities. *Journal of Interactive Marketing*, 24(1) 14-21.

Schiffman, L., Bednall, D., O'Cass, A., Paladino, A., Ward, S., and Kanuk, L. (2008). *Consumer behaviour* (4th ed). Sidney: Pearson Education Australia.

Schiffman, L.G., Kanuk, L.L. and Brewer, S.W. (2014). *Consumer behaviour: global and Southern African perspectives*. Upper Saddle River, NJ: Pearson.

Shamim, A. and Mohsin Butt, M. (2013). A critical model of brand experience consequences. *Asia Pacific Journal of Marketing and Logistics*, *25*(1) 102-117.

Sheeraz, M., Iqbal, N. and Ahmed, N. (2012). Impact of Brand Credibility and Consumer Values on Consumer Purchase Intentions in Pakistan. *International Journal of Academic Research in Business and Social Sciences*, 2(8)1.

Shimp, T. A., and Madden, T. J. (1988). Consumer-object relations: a conceptual framework based analogously on Sternberg's triangular theory of love. *Advances in Consumer Research*, 15 (1), 163-168.

Sigamoney, J. (2016). The formation of brand tribes and the subsequent behaviour of brand tribe members. *Business and social sciences journal*, 1 (2), 1-19.

Skoog, M., and Soderstrom, M. (2015). *Antecedents and outcomes of Brand love: A qualitative study within the Swedish clothing industry.* Degree Thesis. Umea School of Business and Economics. Umea University, 3-102.

Spears, N. and Singh, S.N. (2004). Measuring attitude toward the brand and purchase intentions. *Journal of Current Issues and Research in Advertising*, 26(2), 53-66.

Somogyi, S., Li, E., Johnson, T., Bruwer, J., and Bastian, S. (2011). The underlying motivations of Chinese wine consumer behaviour. *Asia Pacific Journal of Marketing and logistics*, 23 (4), 473-485.

Sreejesh, S. (2015). Consumer's perceived brand aspiration and its impact on intention to pay price premium. Moderating role of brand jealousy. *Theoretical Economics Letters*, 5, 273-284

Sreejesh, S., Roy, S. and Sarkar, A. (2015). *Consumers' Luxury Brand Aspiration, Brand Attachment, Brand Commitment and Intention to Pay Price Premium*. Working Paper. Scientific research publishing.

Shimp, T A., and Madden, T. J. (1988) Consumer-Object Relations: A Conceptual Framework Based Analogously on Sternberg's Triangular Theory of Love. *Advances in Consumer Research*, 15, 163-168.

Soars, B. (2009). Driving sales through shoppers' sense of sound, sight, smell and touch. *International Journal of Retail & Distribution Management*, 37(3), 286-298.

Sousa, C.M. and Bradley, F. (2006). Cultural distance and psychic distance: two peas in a pod? *Journal of International Marketing*, 14(1), 49-70.

Sternberg R. J. (1986). A Triangular Theory of Love. *Psychological Review*, 93(2), 119-135.

Suryaningsih, I.B., Hadiwidjojo, D., Rohman, F. and Sumiati, S. (2014). A Theoretical Framework: The Role of Trust and Perceived Risks in Purchased Decision. *Research in Business and Management*, 1(2) 103-120.

Swait, J. and Erdem, T. (2007). Brand Effects on Choice and Choice Set Formation under Uncertainty. *Marketing Science* 26 (5), 679-730.

Swaminathan, V., Stilley, K.M. and Ahluwalia, R. (2008). When brand personality matters: The moderating role of attachment styles. *Journal of Consumer Research*, 35(6), 985-1002.

Swaminathan, V., Stilley, K. and Ahluwalia, R. (2009). The Role of Brand Personality and Consumer Attachment Style in Strengthening Brand Relationships. *ACR North American Advances.*

Swanson, K. (2015). Place brand love and marketing to place consumers as tourists. *Journal of Place Management and Development*, 18 (2), 142-146.

Sweeney, J., and Swait, J. (2008). The effects of brand credibility on customer loyalty. *Journal of retailing and consumer services*, 15, 179-193.

Tabachnick, B.G. and Fidell, L.S. (2007). Multivariate analysis of variance and covariance. *Using multivariate statistics*, 3,402-407.

Tariq, M., Nawaz, M., Butt, H., and Nawaz, M. (2013). Customer perceptions about branding and purchase intention: A study of FMCG in an emerging Market, *Journal of Basic and applied scientific Research*, 3 (2)340-347.

Tashakkori, A. and Teddlie, C. (1998). *Mixed methodology: Combining qualitative and quantitative approaches* (46). Thousand Oaks, CA: Sage.

Taute, H. A. and Sierra, J. (2014). Brand tribalism: An anthropological perspective. *Journal of Product and Brand Management*, 23 (1).

Taylor, H. (2000). Does Internet research work? Comparing electronic survey results with telephone survey. *International Journal of Market Research*, 42 (1), 51–63.

Thatch, E. C., and Olsen, J. E. (2006). Market segment analysis to target young adult wine drinkers. *Agribusiness*, 22(3), 307-322.

Thompson, C. J. (2014). The politics of Consumer Identity. *Journal of Consumer Research*, 40,155-157.

Thompson K. R. (2010). *The millennial generation and wine purchasing beliefs in casual dining restaurants.* Department of Hospitality Management and Dietetics College of Human Ecology Kansas state university Manhattan, Kansas. (PhD dissertation).

Thompson, M., MacInnis, D. J., and Park, C. W. (2005). The ties that bind: measuring the strength of consumers' attachments to brands. *Journal of Consumer Psychology*, 15(1), 77-91.

Tigli, M., Pirtini, S. and Erdem, Y.C. (2010). The perceived country of origin images in Turkey. *The International Business & Economics Research Journal*, 9(8), 127.

Toomey, D.A. and Francis, A.L. (2013). Branded product placement and pre-teenaged consumers: influence on brand preference and choice. *Young Consumers*, 14(2) 180-192.

Trimble, C.S. and Rifon, N.J. (2006). Consumer perceptions of compatibility in cause-related marketing messages. *International Journal of Non-profit and Voluntary Sector Marketing*, 11(1) 29-47.

Truong, Y., Rod, M. and Philip, J. K. (2010). Uncovering the Relationships between Aspirations and Luxury Brand Preference. *Journal of Product and Brand Management*, 19, 346-355.

Tsai, Y.C., Chang, H.C. and Ho, K.C. (2015). A Study of the Relationship among Brand Experiences, Self-Concept Congruence, Customer Satisfaction, and Brand Preference. *Contemporary Management Research*, 11(2), 97.

Tsiotsou, R.H. (2013). *The role of brand relationships and tribal behaviour on brand loyalty*. In AMA Winter Education Conference Proceedings 24, 366-374.

Tuominen, P. (2011). *Brand Tribalism – A Netnographic Exploration of Virtual Communities.* University of Hertfordshire Business School (Working paper).

Unal, S., and H. Aydin, H. (2013). An Investigation on the Evaluation of the Factors Affecting Brand Love. *Procedia - Social and Behavioral Sciences* 92, 76 – 85.

Van den Berg, A. (2017). *Factors influencing the purchase intention of the black middle-class in emerging markets for global brands: the case of fashion brands in South Africa*. (Unpublished Doctoral thesis). University of Witwatersrand South Africa.

Veloutsou, C., and Moutinho, L. (2009). Brand relationships through brand reputation and brand tribalism. *Journal of Business Research*, 62(3), 314-322.

Venter, R. (2010). *The Evaluation of Service Delivery in the Fast Growing Black Diamond Market.* (Unpublished Masters Dissertation). North West University.

Venter, M., Chuchu, T. and Pattison, K. (2016). An empirical investigation into the effectiveness of consumer generated content on the purchase intention of sports apparel brands. *Journal of Contemporary Management*, 13(1), 27-54.

Verdonk, N., Wilkinson, J., Culbert, J., Ristic, R., Pearce, K. and Wilkinson, K. (2017). Toward a model of sparkling wine purchasing preferences. *International Journal of Wine Business Research*, 29 (1), 58-73.

Vernuccio, M., Pagani, M., Barbarossa, C., and Pastore, A. (2015). Antecedents of brand love in online- based network communities. Social Identity perspective. *Journal of Product and Brand Management*, 24 (7), 706-719).

Vink, N. and Alant, K (2013). *Mountains, Vineyards and SME's – Marketing Wine from the Floral Kingdom at the Southern Tip of Africa*. Talca - Chile xx econometrics conference, September, 1-30.

Vink, N., Deloire, A., Bonnardot, V. and Ewert, J., (2012) Climate change and the future of South Africa's wine industry. *International Journal of Climate Change Strategies and Management*, 4(4), 420-441.

VinIntell, (2013). *Future scenarios for the South African wine industry: Part 5: Generation Y: the new wine market colossus*, Cape Town: A SAWIS Publication. [Online] Accessed on 5/05/2016.

Vlachos, P. A., and Vrechopoulos, A. P. (2012). Consumer-retailer love and attachment: Antecedents and personality moderators *Journal of Retailing and Consumer Services* 19, 218-228.

Wallace, E., Buil, I., and de Chernatony, L. (2014). Consumer engagement with self-expressive brands: brand love and WOM outcomes. *Journal of Product and Brand Management*, 23 (1), 33-42.

Wang, Y.H. and Tsai, C.F. (2014). The relationship between brand image and purchase intention: Evidence from award winning mutual funds. *International Journal of Business and Finance Research*, 8(2), 27-40.

Wee, K, Khee, G.E., Warren, G., Pei, J. C. K and Ping, S. P. (2012). *Modelling repurchase intention of proton automobile using SEM.* Final Year Project, UTAR.

Weiler, A. (2005). Information Seeking Behaviour in Generation Y Students: Motivation, Critical Thinking and Learning Theory. *Journal of Academic Librarianship* 31 (1), 46–53.

Wang, E.S.T. (2010). Impact of multiple perceived value on consumers' brand preference and purchase intention: a case of snack foods. *Journal of Food Products Marketing*, 16(4), 386-397.

Whang, Y.O., Allen, J., Sahoury, N. and Zhang, H. (2004). Falling in love with a product: The structure of a romantic consumer-product relationship. *Advances in consumer research* 31, 320-327.

Wang, X. and Yang, Z. (2010). The effect of brand credibility on consumers' brand purchase intention in emerging economies: The moderating role of brand awareness and brand image. *Journal of Global Marketing*, 23(3) 177-188.

WESGROW (2017). Wine fact sheet. Available on http://www.wesgro.co.za/pdf_repository/Wine%20Fact%20Sheet%20-%20Mar%202017%20-%20Final. Accessed 28/04/2018.

Wine Market Council. (2009).Wine Market Council consumer tracking study. Available on www.winemarketcouncil.com. Accessed 05/05/2017.

Wine Market Council. (2010). Consumer data research. Available on, from http://www.winemarketcouncil.com/research_data.asp. Accessed 28/04/2018.

WOSA (Wine of South Africa). (2016b). Wine growing regions. Retrieved from http://www.wosa.co.za/The-Industry/Winegrowing-Areas/Winelands-of-South-Africa/ Accessed 05/05/2017.

Wright- Isak, C. (2012). Community as a brand: An exploratory investigation. *Journal of Business and Economics Research*, 10 (3).

Wu, J., Haung, L. Zhau, J. L., and Hau, Z. (2015). The deeper, the better? Effect of online brand community activity on customer purchase frequency. *Information and management*.

Xu, P. and Zeng, Y.C. (2014). Factors that affect willingness to pay for red wines in China. *Journal of International Consumer Marketing*, 26(5), 426-439.

Yang, D.F., Yang, J.H. and Wei, H.Y. (2010). Brand Experience, Self-Presentation and Brand Love: Building Brand Love through Perfect Experience [J]. *Journal of Business Economics*, 10, 12.

Yang, S.L., Allenby, G.M. and Fennell, G. (2002). Modelling variation in brand preference: the roles of objective environment and motivating conditions", *Marketing Science*, 21(1), 14-31.

Yasar, N.N., Isik, M. and Calisir, F. (2015). Intellectual capital efficiency: the case of football clubs. *Procedia-Social and Behavioural Sciences*, 207, 354-362.

Yasin, M. and Shamim, A. (2013). Brand love mediating role in purchase intentions and word of mouth, *IOSR Journal of Business Management*, 7 (2), 101-109.

Zahraie, B., Everett, A.M., Walton, S. and Kirkwood, J. (2016). Environmental entrepreneurs facilitating change toward sustainability: A case study of the wine industry in New Zealand. *Small Enterprise Research*, *23*(1), 39-57.

Zakaria, N. and Mustaffa, C. S. (2014). Source Credibility, risk communication and well-being. A conceptual Framework. *Procedia Social and Behavioural sciences*, 155, 178-183.

Zarantonello, L., Formisano, M. Grappi, S. (2016). The relationship between brand love and actual brand performance. Evidence from an international study. *International Marketing review* 33 (6), 306-324.

Zeithaml, V.A., Berry, L.L. and Parasuraman, A. (1996). The behavioural consequences of service quality. *The Journal of Marketing*, 31-46.

Zilaie, R., Kordnaeij, A. and Ahmadi, P. (2016). The Relative Contribution of Brand Love and Country Image towards the Formation of Brand Equity. *Mediterranean Journal of Social Sciences*, 7(2 S2), 164.

Zhou, Z., Zhang, Q., Su, C. and Zhou, N. (2012). How do brand communities generate brand relationships? Intermediate mechanisms. *Journal of Business Research 65* (7), 890–895. Available online http://www.thefiftybest.com/wine/the_wine_detective/wines_of_south_africa.html Date Accessed 15/05/2015.

APPENDICES

Appendix 1: Participant Information Sheet

The University of Witwatersrand

School of Economics and Business Sciences

Cell: 072 206 3071

Email: thubandlela@gmail.com

Date: April 2016

Dear Sir/Madam

RE: COMPLETION OF QUESTIONNAIRE

I am a PhD student at the University of Witwatersrand – at the School of Economics and Business Sciences. In order to fulfil the requirements for my degree, I have to undertake research. The topic for my research is "THE PREDICTORS OF CONSUMER PURCHASE INTENTION OF IMPORTED WINES AMONG GENERATION Y CONSUMERS IN SOUTH AFRICA"

In order to accomplish my research objectives, a questionnaire has been prepared to gather information regarding the following:

- Whether brand tribalism influences purchase intention for imported wine.
- How brand credibility, brand preference and brand love mediate between brand tribalism and purchase intention of imported wine.

This is to kindly request you to complete the attached questionnaire. Your response will be of great value to the research. Please be advised that your identity will remain anonymous and your feedback will be kept in utmost confidence. Participation in the study is voluntary and participants can withdraw at any stage of the study. Completion of the questionnaire will take approximately 30mins of your time.

Responses to the survey will only be reported in the aggregate and will not be used for purposes other than this research project. The data collected from this study will be kept safe in a password protected computer and will be destroyed once the research is completed.

Please note that your decision to complete the survey will be taken as your consent.

Yours Sincerely

Thubelihle N. Ndlela

Supervisor

Prof R. Chinomona

richard.chinomona@wits.ac.za 071 0247488

Appendix 2 : Questionnaire

Please answer the following questions by marking the appropriate answer(s) with an X.

This questionnaire is strictly for research purposes only.

SECTION A: GENERAL INFORMATION

1 Please indicate your gender:

Male		**Female**		**Prefer not to say**	

2 Please indicate your age category

18 – 24 years	
25 – 30 years	
30-35 years	
35-39	

3 Please indicate your highest academic level

None	
Primary	
High School	
Diploma	
Degree	
Postgraduate degree	

4 In which provinces do you reside?

Eastern Cape	
Free State	
Gauteng	
KwaZulu- Natal	
Limpopo	
Mpumalanga	
Northern Cape	
North West	
Western Cape	

Section C: Purchase frequency

How often to you purchase imported wine?

Once a week	
Monthly	
Only on special occasions	
Never	

SECTION C: Imported wine purchase

7. Where does the wine you purchase come from?

France	
Italy	
Spain	
United States	
Other	

SECTION D: BRAND TRIBALISM

Please indicate to what extent you disagree or agree with each statement below.		**Strongly disagree 1**	**Disagree 2**	**Neutral 3**	**Agree 4**	**Strongly agree 5**
D1	Imported wine brands fit my image					
D2	I know many people who consume imported wine brands					
D3	Imported wine brands consumption is related to the way I perceive life.					
D4	I achieve a sense of belonging by buying the same wine brands as my friends					
D5	I would buy imported wine brands because I am sure my friends approve of it					

SECTION E: BRAND LOVE

To what extent do you disagree or agree with each of the statements below:		Strongly disagree 1	Disagree 2	Neutral 3	Agree 4	Strongly Agree 5
E1	I love imported wine brands					
E2	Imported wine brands are a pure delight to me					
E3	Imported wine brands are totally awesome					
E4	Imported wine brands make me feel good					

SECTION F: BRAND PREFERENCE

To what extent do you disagree or agree with the following statements:		Strongly disagree 1	Disagree 2	Neutral 3	Agree 4	Strongly agree 5
F1	I think imported wine brands are superior to other competing local brands					
F2	I prefer imported wine brands					
F3	When considering wine purchase, I consider imported wine brands					
F4	I am interested in trying other imported wine brands					
F5	Intend to replace my local wine preference with imported wine brands					

SECTION G: BRAND CREDIBILITY

To what extent do you disagree or agree with each of the statements below:		Strongly Disagree 1	Disagree 2	Neutral 3	Agree 4	Strongly agree 5
G1	Imported wine brands deliver what they promise					
G2	Imported wine brands claim are believable					
G3	Imported wine brands are brand names one can trust					
G4	I am content and knowledgeable about imported wine brands					

SECTION H: PURCHASE INTENTION

Please indicate to what extent you disagree or agree with each statement below.		Strongly disagree 1	Disagree 2	Neutral 3	Agree 4	Strongly agree 5
H1	I would buy imported wine products buy imported wine brands					
H2	My willingness to buy imported wine brands is high.					
H3	I am likely to purchase imported wine brands.					
H4	I have a high intention to buy imported wine brands.					

Thank you for taking the time to complete this questionnaire.

Appendix 3: Ethical clearance

Research Office

HUMAN RESEARCH ETHICS COMMITTEE (NON-MEDICAL)
R14/49 Ndlela

CLEARANCE CERTIFICATE	**PROTOCOL NUMBER: H16/02/29**
PROJECT TITLE	The antecedents of consumer purchase intention of imported wines among 'Generation Y' consumers in South Africa
INVESTIGATOR(S)	Ms T Ndlela
SCHOOL/DEPARTMENT	Economic and Business Science/
DATE CONSIDERED	19 February 2016
DECISION OF THE COMMITTEE	Approved unconditionally
EXPIRY DATE	06 March 2019

DATE 07 March 2016 **CHAIRPERSON** _____
(Professor J Knight)

cc: Supervisor : Professor R Chinomona

DECLARATION OF INVESTIGATOR(S)

To be completed in duplicate and **ONE COPY** returned to the Secretary at Room 10005, 10th Floor, Senate House, University.

I/We fully understand the conditions under which I am/we are authorized to carry out the abovementioned research and I/we guarantee to ensure compliance with these conditions. Should any departure to be contemplated from the research procedure as approved I/we undertake to resubmit the protocol to the Committee. **I agree to completion of a yearly progress report.**

_____ _____/_____/_____
Signature **Date**

PLEASE QUOTE THE PROTOCOL NUMBER ON ALL ENQUIRIES

Appendix 4: Proof of editing

Confirmation of proofreading and editing

THE PREDICTORS OF CONSUMER PURCHASE INTENTION OF IMPORTED WINES AMONG GENERATION Y CONSUMERS IN SOUTH AFRICA, by THUBELIHLE NAMASWAZI NDLELA

This serves to confirm that I have proofread this thesis and have made relevant corrections and emendations.

I have been proofreading Honours, Masters and Doctoral dissertations and theses for the past 12+ years *inter alia* for the following institutions: University of the Witwatersrand; GIBS; University of Cape Town; Milpark; Mancosa; University of KwaZuluNatal; University of Johannesburg, Unisa, Tshwane University of Technology.
I have also undertaken proofreading for publishers, such as Oxford University Press and Juta & Company, companies, institutions and non-governmental organisations.



Jennifer Croll
BA(Wits); H.Dip.Lib. (UCT); B.Tech(LIS), B.Inf.Sc.(Hons)(Unisa); MM(Research), MM(Strategic Marketing)(Wits).
Email: Jennifer.croll@wits.ac.za
Mobile: 072-351-7997
09th April 2018

Appendix 5

Regression Weights: (Group number 1 - Default model)

			Estimate	S.E.	C.R.	P	Label
BL	<---	BT	.861	.078	11.049	***	par_12
BC	<---	BT	.171	.063	2.712	.007	par_14
BP	<---	BT	.649	.130	5.002	***	par_13
BP	<---	BL	.269	.108	2.496	.013	par_18
BP	<---	BC	.014	.050	.276	.783	par_19
PI	<---	BL	-.106	.086	-1.242	.214	par_15
PI	<---	BP	.112	.085	1.317	.188	par_16
PI	<---	BC	.617	.073	8.418	***	par_17
BT5	<---	BT	1.000				
BT4	<---	BT	.710	.082	8.632	***	par_1
BT2	<---	BT	.786	.080	9.857	***	par_2
BT1	<---	BT	.820	.069	11.893	***	par_3
BL4	<---	BL	1.000				
BL3	<---	BL	1.075	.053	20.417	***	par_4
BL2	<---	BL	1.122	.054	20.771	***	par_5
BL1	<---	BL	1.001	.053	18.879	***	par_6
BP3	<---	BP	1.000				
BP2	<---	BP	1.068	.059	18.113	***	par_7
BP1	<---	BP	1.010	.064	15.797	***	par_8
BC3	<---	BC	1.000				
BC2	<---	BC	1.008	.055	18.358	***	par_9
BC1	<---	BC	.861	.053	16.123	***	par_10
P12	<---	PI	1.000				
PI1	<---	PI	1.031	.117	8.809	***	par_11

Standardized Regression Weights: (Group number 1 - Default model)

			Estimate
BL	<---	BT	.818
BC	<---	BT	.177
BP	<---	BT	.596
BP	<---	BL	.260
BP	<---	BC	.012
PI	<---	BL	-.121
PI	<---	BP	.132
PI	<---	BC	.644
BT5	<---	BT	.721
BT4	<---	BT	.527
BT2	<---	BT	.603
BT1	<---	BT	.737
BL4	<---	BL	.815
BL3	<---	BL	.913
BL2	<---	BL	.923
BL1	<---	BL	.868
BP3	<---	BP	.811
BP2	<---	BP	.899
BP1	<---	BP	.797
BC3	<---	BC	.847
BC2	<---	BC	.894
BC1	<---	BC	.787
P12	<---	PI	.729
PI1	<---	PI	.771

Standardized Regression Weights: (Group number 1 - Default model)

			Estimate
BT5	<---	BT	.721
BT4	<---	BT	.527
BT2	<---	BT	.605
BT1	<---	BT	.736
BL4	<---	BL	.815
BL3	<---	BL	.913
BL2	<---	BL	.924

BL1	**<---**	**BL**	**.868**
BP3	<---	BP	.811
BP2	<---	BP	.899
BP1	<---	BP	.797
BC3	<---	BC	.848
BC2	<---	BC	.893
BC1	<---	BC	.788
P12	<---	PI	.731
PI1	<---	PI	.769

Construct	**Highest shared Correlation values**	**Highest Shared Variance**	**AVE**
Brand Tribalism	0.442	0.195	0.426
Brand Love	0.536	0.287	0.776
Brand Preference	0.536	0.287	0.700
Brand Credibility	0.298	0.089	0.712
Purchase Intention	0.298	0.089	0.563