

https://dspace.org/

Adoption of mobile internet applications as a means of communication in South Africa

Naidoo, Deena

2014-01-21
http://hdl.handle.net10539/13550

Downloaded from a DSpace repository. https://dspace.org/

Adoption of mobile internet applications as a means of communication in South Africa

Deena Naidoo

A research report submitted to the Faculty of Commerce, Law and Management, University of the Witwatersrand, in partial fulfilment of the requirements for the degree of Master of Business Administration

Johannesburg, February 2013

ABSTRACT

Mobile network operators in South Africa are experiencing a decline in their voice and messaging revenues as consumers continue to find new and cheaper ways to communicate over the mobile internet. The availability of high speed mobile broadband access and increased smartphone penetration in South Africa has created an environment in which the availability and use of Mobile Instant Messaging (MIM) applications (such as Whatsapp, Mxit, BBM and iMessage) are flourishing. Consumers are now downloading MIM applications onto their smartphones to support text messaging over the mobile internet as opposed to using mobile operators' own messaging platforms. Consequently, every text message sent via MIM communication is lost revenue for mobile network operators. With limited research pertaining to the factors that influence consumers' to adopt MIM for communication, this study attempts to identify these factors and the extent to which they affect consumers' behavioural intention to adopt MIM for communication. Data collection was facilitated by means of an online survey via the internet and respondents were contacted via e-mail to participate in the survey. The samples used were mainly from the economically active population in South Africa that have valid e-mail accounts and have access to the internet. There were 259 valid respondents for the survey. The findings suggest that the factors, facilitating conditions, attitude, compatibility, perceived behavioural control, relative advantage and self-efficacy (in descending order of importance) have significant positive influences on consumers' behavioural intention to adopt MIM for communication. While, subjective norms and significant others were found to have no significant impact. The results of this study are expected to give mobile network operators in South Africa an insight into how consumers come to accept and adopt MIM services for communication. Mobile operators must recognise that consumer behaviour is changing and that there is an imminent risk of their services being eroded by MIM communication.

DECLARATION

I, Deena Naidoo, declare that this research report is my own work except as indicated in the references and acknowledgements. It is submitted in partial fulfilment of the requirements for the degree of Master of Business Administration in the University of the Witwatersrand, Johannesburg. It has not been submitted before for any degree or examination in this or any other university.

_____

DEENA NAIDOO

Signed at ……..…..…

On the …….. day of …… 2013

DEDICATION

To my mum, Mrs Paghiam M. Naidoo

You taught me the value of education and have always supported

me throughout my academic career.

And

To my fiancée, Miss Roxanne R. Mottay

You were a pillar of strength throughout this journey.

Thank you for always believing in me.

ACKNOWLEDGEMENTS

I wish to express my sincere gratitude to the people who through their contributions made this dissertation possible.

Thank you to Mr Antony Soicher, my supervisor. Your motivation and guidance has enabled me to achieve this goal. Thanks to Prof. Greg Lee for all your assistance and support with the statistics portion of this study. My sincerest gratitude for the time and effort you both have taken to assist me throughout the research process, to understand the subject matter better and for pointing me in the right direction whenever I managed to go off track.

I would also like to offer my endless gratitude to my mum, fiancée and my brother Venasen for their infinite love and support throughout my MBA. Thanks for always being there for me and assisting me to reach my goals. I could not have achieved this milestone without you. Also, thanks to my dear friend Kaveer Sarjoo, for motivating me to do an MBA at Wits and for all the advice and guidance you've given me throughout my studies.

A further thank you goes out to all my friends, family and colleagues who offered advice and good wishes for the successful completion of my research report.

TABLE OF CONTENTS

ABSTRACT ..... **II**

DECLARATION ..... **III**

DEDICATION ..... **IV**

ACKNOWLEDGEMENTS ..... **V**

LIST OF TABLES ..... **IX**

LIST OF FIGURES ..... **X**

CHAPTER 1: INTRODUCTION **1**

1.1 PURPOSE OF THE STUDY 1
1.2 CONTEXT OF THE STUDY 1
1.3 PROBLEM STATEMENT 4
1.3.1 MAIN PROBLEM 4
1.4 SIGNIFICANCE OF THE STUDY 5
1.5 DELIMITATIONS OF THE STUDY 6
1.6 DEFINITION OF TERMS 6
1.7 ASSUMPTIONS 9

CHAPTER 2: LITERATURE REVIEW **10**

2.1 INTRODUCTION 10
2.2 MOBILE BROADBAND PENETRATION 11
2.3 SMARTPHONE PENETRATION 13
2.4 MOBILE INTERNET COMMUNICATION 14
2.4.1 MOBILE INSTANT MESSAGING (MIM) 15
2.4.2 MOBILE VOICE-OVER-IP (MVOIP) 18
2.5 MOBILE TELECOMMUNICATIONS INDUSTRY IN SOUTH AFRICA 19
2.6 MIM ADOPTION THEORY 20
2.6.1 TECHNOLOGY ACCEPTANCE THEORIES 21
2.6.2 THE DECOMPOSED THEORY OF PLANNED BEHAVIOUR (DTPB) 24
2.7 RESEARCH MODEL AND HYPOTHESES DEVELOPMENT 27
2.7.1 BEHAVIOURAL INTENTION (BI) 28
2.7.2 ATTITUDE 28
2.7.3 SUBJECTIVE NORMS 30
2.7.4 PERCEIVED BEHAVIOURAL CONTROL 30
2.8 CONCLUSION OF LITERATURE REVIEW 31
2.8.1 BEHAVIOURAL INTENTION 32
2.8.2 ATTITUDE 32
2.8.3 SUBJECTIVE NORMS 32

2.8.4 PERCEIVED BEHAVIOURAL CONTROL 32

CHAPTER 3: RESEARCH METHODOLOGY 33

3.1 QUANTITATIVE RESEARCH 33
3.2 SURVEY APPROACH 34
3.3 POPULATION AND SAMPLE 35
3.3.1 POPULATION 35
3.3.2 SAMPLE AND SAMPLING METHOD 35
3.4 THE RESEARCH INSTRUMENT 35
3.5 PROCEDURE FOR DATA COLLECTION 39
3.6 DATA ANALYSIS AND INTERPRETATION 39
3.6.1 DATA PREPARATION 39
3.6.2 THE MEASUREMENT MODEL 42
3.6.3 THE STRUCTURAL MODEL 46
3.7 LIMITATIONS OF THE STUDY 47
3.8 VALIDITY AND RELIABILITY 47
3.8.1 EXTERNAL VALIDITY 47
3.8.2 INTERNAL VALIDITY 48
3.8.3 RELIABILITY 50

CHAPTER 4: PRESENTATION OF RESULTS 51

4.1 INTRODUCTION 51
4.2 DEMOGRAPHIC PROFILE OF RESPONDENTS 51
4.3 DESCRIPTIVE STATISTICS 53
4.4 STRUCTURAL MODEL (GOODNESS-OF-FIT) 55
4.5 STRUCTURAL MODEL ANALYSIS 56
4.6 DECOMPOSITION OF EFFECTS 57
4.7 SUMMARY OF HYPOTHESIS RESULTS 61

CHAPTER 5: DISCUSSION OF THE RESULTS 63

5.1 INTRODUCTION 63
5.2 DEMOGRAPHIC PROFILE OF RESPONDENTS 63
5.3 DISCUSSION - HYPOTHESIS 1 66
5.4 DISCUSSION - HYPOTHESIS 2 67
5.5 DISCUSSION - HYPOTHESIS 3 68
5.6 DISCUSSION - HYPOTHESIS 4 69
5.7 DISCUSSION - HYPOTHESIS 5 70
5.8 DISCUSSION - HYPOTHESIS 6 71
5.9 DISCUSSION - HYPOTHESIS 7 72
5.10 DISCUSSION - HYPOTHESIS 8 73
5.11 DISCUSSION - HYPOTHESIS 9 73

5.12 Discussion - Hypothesis 10 74
5.13 MIM adoption in China vs. South Africa 75
5.14 Conclusion 78

CHAPTER 6: CONCLUSIONS AND RECOMMENDATIONS 79

6.1 Introduction 79
6.2 Conclusions of the study 79
6.3 Recommendations for MNOs in South Africa 81
6.4 Suggestions for future research 82

REFERENCES 84

APPENDIX A 90

APPENDIX B 92

APPENDIX C 98

APPENDIX D 101

APPENDIX E 104

APPENDIX F 108

APPENDIX G 110

APPENDIX H 116

LIST OF TABLES

Table 1: Measurement of Variables 37

Table 2: CFA - Goodness of Fit Indices 43

Table 3: Average Variance Extracted for Latent Constructs 49

Table 4: Profile of respondents 52

Table 5: Means, standard deviation and correlations (*N* = 259)..... 54

Table 6: Structural Model (Goodness-of-fit) 55

Table 7: Decomposition of effects..... 58

Table 8: Hypotheses Results 61

Table 9: MIM Adoption in China vs. South Africa..... 75

Table 10: MIM Preferences..... 95

Table 11: Z scores for the measured variables 99

Table 12: Skewness and Kurtosis indicators for the measured variables 102

Table 13: Inter-Item correlation matrix 105

Table 14: VIF Scores 106

Table 15: Squared inter-Item correlation matrix..... 109

LIST OF FIGURES

Figure 1: Global, mobile broadband subscription 1Q11 12

Figure 2: Global smartphone vs. non-smartphone sales, 2010-2016..... 13

Figure 3: Global, smartphone sales penetration as a proportion of total handset sales, by region, 2010 - 2016..... 14

Figure 4: OTT providers vs. mobile/fixed operators 15

Figure 5: Whatsapp Graphical User Interface for iPhone..... 17

Figure 6: Viber's Graphical User Interface for iPhone..... 18

Figure 7: Decomposed Theory of Planned Behavior (DTPB) - (Ke and Li, 2009) 25

Figure 8: The Research Model – MIM adoption in South Africa..... 27

Figure 9: Structural Model Analysis 56

Figure 10: Percentage distribution of sample data vs. target population by racial groups and gender..... 64

Figure 11: Percentage distribution of MIM applications, including postpaid and prepaid subscriptions..... 65

Figure 12: CFA Analysis – Amos Output 111

Figure 13: Structural Model – Amos Output..... 117

CHAPTER 1: INTRODUCTION

1.1 Purpose of the study

The purpose of this study is to determine the factors that influence the adoption of mobile internet applications (apps) as a means of communication among cell phone users in South Africa. It attempts to identify the factors and the extent to which they influence consumers' behavioural intention to adopt mobile internet apps for communication. The findings are expected to give mobile network operators' (MNO) an insight into how subscribers come to accept and adopt mobile internet apps such as Whatsapp, Mxit, Blackberry Messenger (BBM) and iMessage as a means of communication in South Africa.

1.2 Context of the study

The mobile telecommunication industry in South Africa is facing a decline in mobile penetration (Lange, 2010) and mobile network operators (i.e. Vodacom, MTN, CellC and 8ta) are searching for growth opportunities in a market that is fast becoming saturated. The increasing competition among mobile operators in the market is putting pressure on them to reduce voice and data tariffs. According to Esselaar, Gillwald, Moyo, and Naidoo (2010) MNOs' are facing a decline in one of their most essential financial figures - average revenue per user (ARPU). This has prompted many of the local MNO's to penetrate new markets and introduce new products and services in order to sustain growth in the industry (Business Monitor International, 2009).

Voice and SMS are still the cash cow services for mobile operators in South Africa, however in recent years operators have experienced a gradual decline in these revenue streams (Lange, 2010). Data usage, on the other hand, is growing exponentially, with mobile subscribers wanting access to broadband services for social communication, email, browsing, gaming, audio and video streaming, banking, online purchases and access to a variety of other online services (Lange,

2010). According to Esselaar et al. (2010), mobile handsets are widely used in South Africa to access the internet as it provides a relatively low cost and effective alternative to personal computer (PC) based internet access. Thus mobile subscriptions are already far exceeding fixed broadband connections and rapid growth is expected to continue in the years ahead (Vodafone, 2011). In South Africa this presents an opportunity for mass internet access via mobile phones rather than personal computers (PC), which most people cannot afford (Lange, 2010; Vodafone, 2011). Moreover, smartphones, tablet computers, laptop computers, and a variety of other connected mobile devices are set to become the primary, and for many people the only, means of internet access (Lange, 2010).

With data usage continually growing on the mobile network, operators are capitalising on this trend by rolling out broadband infrastructure to expand their third generation (3G) data network, supporting High Speed Packet Access ($HSPA^{+}$). This means that mobile subscribers are now able to access internet services from their handsets at wire line speeds (Lange, 2010). According to Cisco (2011), world mobile data traffic has almost tripled in the past year and is expected to increase by a factor of 26 by 2015. The growth in data usage has reinvigorated the market for mobile internet apps, including uncapped (or unlimited) data bundles (Van den Dam & Nelson, 2011). Examples of mobile internet apps include YouTube apps, communication apps (e.g. Whatsapp and Viber), social networking apps (e.g. Facebook and twitter), banking apps, weather apps and news apps.

The use of mobile internet apps is extremely beneficial for consumers, however it brings about unforeseen challenges for mobile network operators, especially with the introduction of Over-the-Top (OTT) providers such as Whatsapp messenger, Blackberry messenger, Skype, Google Voice and Viber. “OTT Providers” is a term coined by telecommunications practitioners to describe third party service providers that support internet communication which fly "over the top" or bypass an operator’s voice network (Willetts, 2009). OTT providers threaten mobile operators’ existing business models since many of these internet applications compete head-on with their existing voice, video, and messaging services.

As an example, a mobile operator allows subscribers to access Google over the mobile internet. Google can then use this opportunity to offer free substitute voice services via their Google voice application. In this way, Google is entering the arena of over-the-top providers by drawing subscribers away from legacy voice services offered by mobile operators. This therefore, threatens the revenue generating capability of MNOs and rendering them increasingly irrelevant as the preferred communications provider.

Mobile internet apps allow subscribers to communicate with one another via mobile instant messaging (MIM) and mobile voice over IP (MVoIP) technologies which are routed over the internet. They are by no means revolutionary since they use the data connection on a mobile handset to route IP voice and SMS-like messages to other users over the internet as opposed to using the MNO's own voice and messaging platforms. Subscribers using internet apps for communication can do so irrespective of the mobile network provider and geographic location. Mobile subscribers would only require a capable cell phone with a stable data connection to access internet communication services.

MVoIP according to Moyo (2012), is very much in its infancy stage in South Africa and mobile operators are in a difficult position regarding the technology. With traditional voice accounting for at least 80% of an operators' revenue base, MVoIP is perceived as a potential threat to MNOs because it offers consumers the ability to make free or cheap voice calls (Lange, 2010). Therefore operators, especially incumbents, will not choose to offer subscribers the opportunity to make free voice calls over their networks. Nonetheless, OTT providers still offer free downloadable MVoIP apps such as Fring and Viber to mobile subscribers in an effort to steadily increase the number of MVoIP users and traffic across the data network.

Mobile Instant Messaging (MIM), as defined by Clark-Dickson and Talmesio (2012) is a form of real-time communication between two or more people based on typed text conveyed over the mobile internet. MIM enables consumers, whether sitting in front of a computer or on the road, to communicate via instant messages across the mobile Internet. Mobile internet apps like BBM, Whatsapp and Mxit also incorporate additional functionality such as presence, file sharing,

group chats and status updates into their offering. SMS still remains an important means of communication in South Africa and operators have been reluctant to promote and drive MIM services for fear of SMS revenue cannibalisation.

MVoIP and MIM have much in common since both services are generally charged for according to the volume of data they consume on the mobile data network. Consequently, MIM is cheaper than SMS and MVoIP is cheaper than traditional voice, as they consume a very small amount of data on the network (Lange, 2010). MVoIP and MIM are still new concepts for the majority of mobile users, but when it catches on, it could spell the end for expensive voice and SMS services. Mobile internet applications threaten existing MNO business models and operators can potentially lose millions if this technology is adopted as a preferred means of communication amongst mobile subscribers in South Africa.

Aside from the obvious cost benefit of using mobile internet applications, there are also additional factors that can influence the adoption of this technology as the preferred means of communication. If identified early enough, these factors can assist mobile operators with strategy formulation, specifically in response to the OTT offering.

1.3 Problem statement

1.3.1 Main problem

To identify the factors that influence the adoption of mobile internet applications as a means of communication among cell phone users in South Africa.

1.4 Significance of the study

The study will provide guidance to MNOs in South Africa as they are faced with a market that is reaching saturation while being threatened by substitute products introduced by over-the-top providers. Mobile operators can utilise the results of this study to unfold fundamental shifts in human communication behaviour and identify present-day communication preferences in order to re-invent themselves in this turbulent mobile market.

Mobile network operators will be in a position to identify specific communication preferences which are of value to their subscribers, and so design products and services to improve subscriber's experiences on the network. MNOs can develop bundled offerings through the integration of mobile voice, SMS, broadband access and internet communication services. The research will give mobile operators insight into predicting subscriber behaviour under certain market conditions, especially in response to the OTT offering.

Moreover, the study will assist mobile operators in making better informed technology and marketing strategy decisions in the likely event of mobile internet apps becoming the preferred means of communication. MNOs can use this information to determine the degree of aggressiveness towards investing in or promoting mobile internet communications in the South African market. Alternatively, if the competitive environment between mobile network operators and OTT providers are far too intense, then operators can lobby government to provide regulatory remedies to prevent subscribers from using mobile internet applications for communication altogether.

1.5 Delimitations of the study

- The market sector under investigation is the mobile telecommunication industry in South Africa.
- Only mobile to mobile communication between individual mobile subscribers will be investigated.
- This study is limited to MIM communication only.
- MVoIP, social networking and electronic mail (e-mail) is excluded from this study.
- Only MIM communication from mobile handsets or smartphones will be considered. Instant messaging from a laptop computer connected through a wireless connection will not be considered in this study

1.6 Definition of terms

- MIM: Mobile Instant Messaging – Is a form of real-time communication between two or more people based on typed text conveyed over the mobile internet (Clark-Dickson & Talmesio, 2012). Popular MIM applications include Whatsapp, iMessage, Mxit and BBM.
- MVoIP: Mobile Voice over Internet Protocol – Is a real time communication technology which allows users to send and receive voice calls via an internet connection on a mobile device (Campbell, 2012). Popular MVoIP applications include Fring, Viber and Skype.
- MNO: Mobile Network Operator – Is a telecommunications service provider that provides wireless voice and data communication for its subscribed mobile users (Janssen, 2012). In South Africa, the major MNOs are Vodacom, MTN, CellC and 8ta.

- Smartphone: A smartphone is a device that can be used both as a mobile phone and as a handheld computer, such as the iPhone, Samsung Galaxy S3, BlackBerry Storm and Nokia E & N series. It allows users to send / receive email, browse the internet, edit office documents, download and install mobile applications and use GPS Navigation.

- Mobile subscriber / consumer: The terms ‘mobile subscriber’ and ‘consumer’ are used interchangeably in this report and refer to users that subscribe to the services (such as voice, SMS and data) provided by mobile network operators.

- OTT Provider: Over-the-top provider - Is a term coined by telecommunications practitioners to describe 3rd party service providers that support internet communication that bypass a mobile operator’s voice network (Willetts, 2009). Examples of OTT providers include Whatsapp, Mxit, Viber, Fring and Skype.

- Construct / Factor: The terms ‘construct’ and ‘factor’ are used interchangeably in this report and refer to an unobservable or latent concept that can be defined in conceptual terms but cannot be measured directly. Instead it is measured indirectly by examining consistency among multiple measured variables, which may also be referred to as manifest variables or indicators (Hair, Anderson, Black, & Tatham, 2010).

- Indicators / Measured variable: The terms ‘indicator’ and ‘measured variable’ are used interchangeably in this report and refer to an observed value used to measure a latent construct. The researcher must specify which indicators are associated with each latent construct (Hair et al., 2010).

- BI: Behavioural Intention - Is concerned with the motivational factors when a subject intends to take a specific action (Ajjan & Hartshorne, 2008; Ajzen, 1991).

- ATT: Attitude – Refers to the degree to which an individual favours the behaviour being examined (Ajjan & Hartshorne, 2008; Ajzen, 1991).
- SN: Subjective Norms – “Refers to the social pressures that make an individual perform a particular behaviour” (Ajjan & Hartshorne, 2008, p. 74).
- PBC: Perceived Behavioural Control – Refers to an individual's perception of whether a behavioural act is within their control (Ke & Li, 2009).
- RA: Relative Advantage – “Refers to the degree to which adopting an innovation is perceived as being better than using the practice it supersedes” (Teo & Pok, 2003, p. 486).
- PEOU: Perceived Ease Of Use – Refers to the belief that using a new technology will be free of effort (Ajjan & Hartshorne, 2008; Davis, 1989).
- COMP: Compatibility – Refers to how well an innovation fits with the potential adopter’s existing values, previous experiences and current needs (Teo & Pok, 2003).
- PPA: Perceived Presence Awareness – Perceived presence awareness is a unique characteristic of IM that allows users to know who is online and what their status is (McClea, Yen, & Huang, 2004).
- SO: Significant Others – Refers to referent groups such as friends, family and colleagues / peers.
- SE: Self-efficacy – Refers to an individual's perceived capability to perform a particular behaviour (Ajjan & Hartshorne, 2008).

1.7 Assumptions

The following assumptions are made in terms of the research:

- The respondents will have enough knowledge in the area of research to be able to clearly respond to the research questions.
- All respondents will have mobile phones and will be experienced in using them.
- All respondents will have used mobile instant messaging applications for communication.

CHAPTER 2: LITERATURE REVIEW

2.1 Introduction

The face of mobile telecommunications has changed dramatically over the last decade. The availability of high speed mobile broadband, increased smartphone penetration and the growing capability of consumers to download, install and use internet applications on their mobile devices have assisted consumers to find new and cheaper ways to communicate over the mobile internet (Clark-Dickson & Talmesio, 2012). Consumers are now downloading over-the-top MVOIP and MIM applications onto their smartphones to support voice calling and text messaging over the internet for free or at a very low rate in comparison with mobile operators. MNO's fear that as the demand for OTT services increase, operators will become less and less visible as consumers will hardly use their services. Every call or text message sent via OTT applications is lost revenue for mobile network operators.

OTT providers such as Whatsapp, MXit, Viber, Fring, Skype, Facebook and other community-based applications pose a significant threat to mobile operators around the world. They cut into operators' revenues as well as reduce performance on the mobile data network. MNOs are now experiencing revenue decline in what were once their most utilised services; mobile voice and short message services (SMS). According to Clark-Dickson and Talmesio (2012), a 10 percentage point increase in smartphone penetration could easily cost European operators between 0.5% and 0.6% reduction in voice and SMS revenue.

For mobile operators the challenge is not just in understanding the technology, but to also unfold fundamental shifts in human communication behaviour. Operators need to identify present-day communication preferences in order to re-invent themselves by designing new and innovative products and services that are appealing to their subscribers.

The fact that MIM services are free or cheap is not the only reason for the uptake. With limited research pertaining to the factors that influence consumers' to adopt MIM for communication in South Africa, this study attempts to identify these factors and the extent to which they affect consumers' behavioural intention to use MIM services for communication.

The literatures review starts by discussing important concepts that give background and context to this study, including mobile broadband, smartphone penetration, MIM communication and the mobile telecommunications industry in South Africa. It then discusses the research framework employed in this study to determine the factors that influence the adoption of MIM for communication in South Africa.

The research framework is based on the decomposed theory of planned behaviour (DTPB) which was first formulated by Taylor and Todd (1995), and thereafter used in more recent studies including Ke and Li (2009), Ajjan and Hartshorne (2008), To, Liao, Chiang, Shih, and Chang (2008) and (Teo & Pok, 2003). The review is then concluded by defining the theoretical hypotheses to be tested in this study.

2.2 Mobile Broadband Penetration

The term mobile broadband refers to high-speed wireless internet access over mobile cellular networks (Mitchell, 2013). Mobile operators normally provide broadband connections over 3G and fourth generation (4G) cellular radio networks. 3G cellular radio networks include access technologies such as High-Speed Down-link Packet Access (HSDPA), which is capable of supporting peak download speeds of up to 14 Megabits per second (Mbps) (McQueen, 2010). 4G cellular radio networks include access technologies such as LTE (Long Term Evolution), which is capable of supporting peak download speeds of up to 100 Mbps (McQueen, 2010). Consumers can connect to the mobile internet by attaching to broadband networks via PC data cards, USB modems, smartphones, tablet computers and portable devices with built-in mobile broadband modules.

Mobile broadband traffic has been growing rapidly over the last decade and operators worldwide have been looking to data services as a new revenue stream to offset the fall in ARPU. According to Clark-Dickson and Talmesio (2012), global mobile broadband subscriptions increased 52% year-on-year in the first quarter of 2011 to a total of 589 million subscribers. Figure 1 illustrates the global, mobile broadband subscription for quarter 1, 2011. Asia Pacific recorded the highest broadband subscriptions totalling 198.5 million, followed by North America with 187.2 million and then Western Europe with 117 million. Africa performed poorly, amounting to only 9.4 million broadband subscriptions in total.

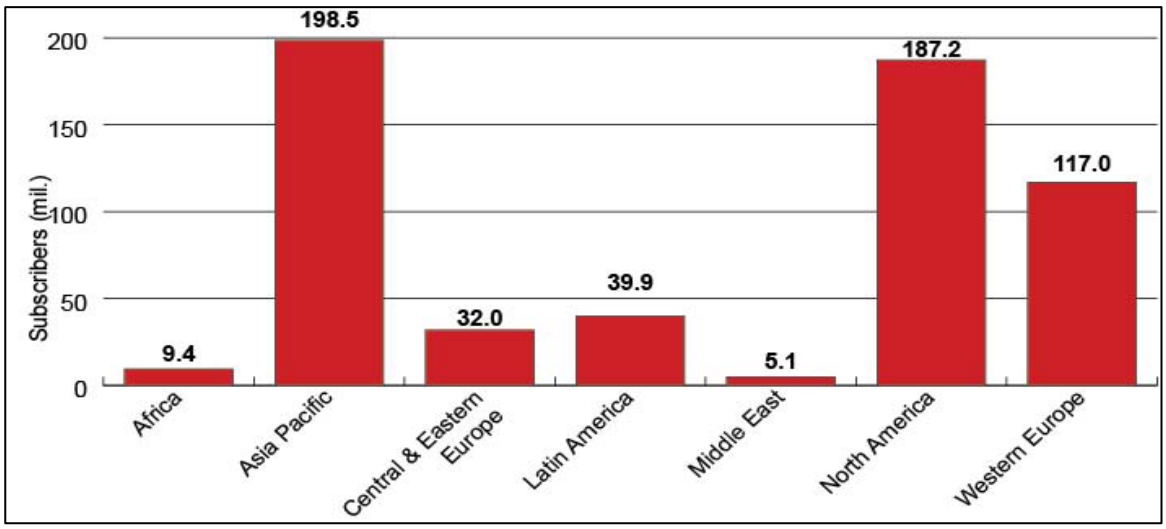

(Source: Informa Telecoms and Media - 2012)

Figure 1: Global, mobile broadband subscription 1Q11

However, according to forecasts conducted by Vodafone (2011), emerging market regions such as Central and Eastern Europe, Latin America, the Middle East and Africa will have the highest mobile broadband growth, reaching approximately 20% of worldwide data traffic by 2015. This is largely due to the near non-existence of fixed line connections in emerging markets.

2.3 Smartphone Penetration

A smartphone is mobile phone that offers advanced computing capabilities and the ability to multi-task, which is supported by an advanced operating system (Clark-Dickson & Talmesio, 2012). Examples of smartphones include the iPhone, Samsung Galaxy, Nokia E/N series and the BlackBerry Storm. Smartphones allow users to send / receive email, browse the internet, edit documents, download / install applications, and much more. A smartphone is a prerequisite for the use of mobile internet applications including MVoIP and MIM communication applications. These applications have typically been developed for only a small subset of device operating platforms such as Apple's iOS, RIM BlackBerry, Google Android and Microsoft Windows Mobile (Clark-Dickson & Talmesio, 2012).

The penetration of smartphones will determine which markets MVoIP and MIM applications become available in, and to what extent they are adopted by mobile subscribers in these markets. Figure 2 shows the global sales of smartphones versus non-smartphone devices. Smartphone sales are envisaged to break the 50% barrier of total handset sales by 2016, amounting to 870 million smartphones sold worldwide.

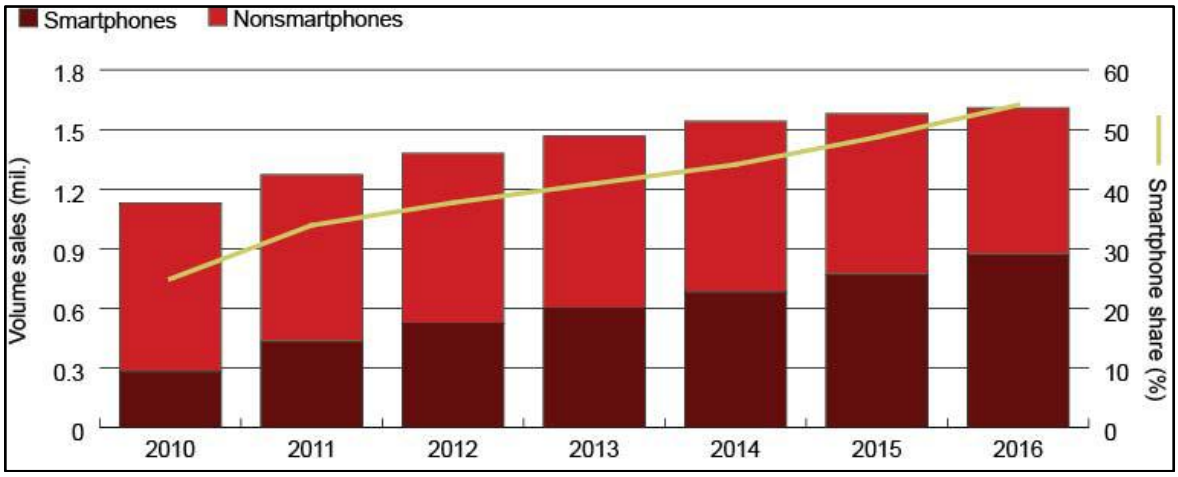

(Source: Informa Telecoms and Media - 2012)

Figure 2: Global smartphone vs. non-smartphone sales, 2010-2016

Figure 3 shows the global, smartphone sales penetration as a proportion of total handset sales, by region. Developed markets in regions such as North America

and Western Europe will experience higher smartphone penetration. Clark-Dickson and Talmesio (2012) forecast that smartphone penetration will reach 69.8% in Europe and 78% in North America by 2016. Emerging market regions such as Asia Pacific, Africa, the Middle East and Latin America will experience gradual smartphone penetration, which is expected to reach 42.8%, 29.2%, 46.7% and 47.2%, respectively, by 2016.

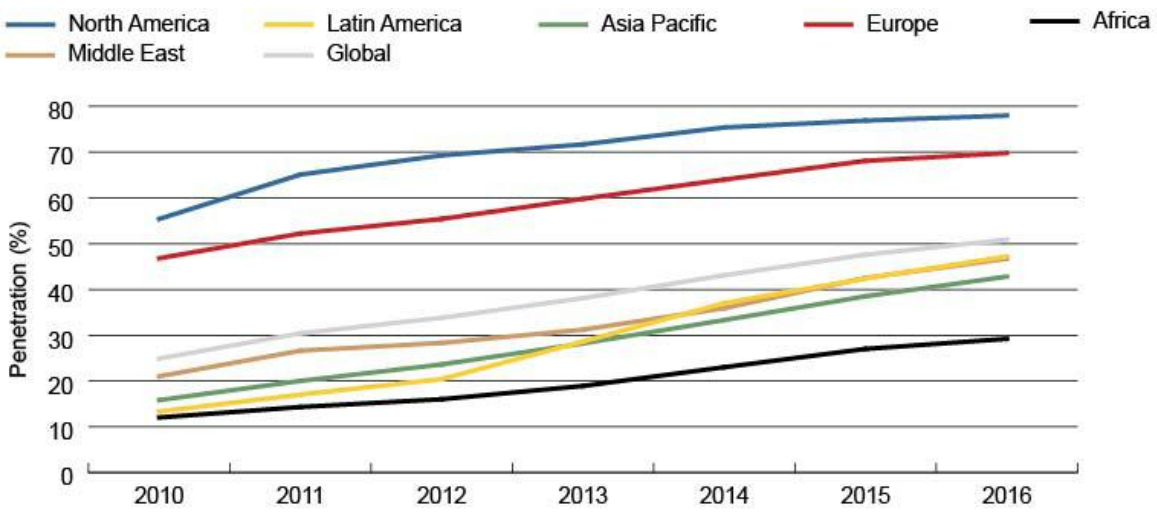

(Source: Informa Telecoms and Media - 2012)

Figure 3: Global, smartphone sales penetration as a proportion of total handset sales, by region, 2010 - 2016

2.4 Mobile Internet Communication

The increased penetration of smartphones and high speed mobile broadband has created an environment in which the availability and use of MVOIP and MIM communication applications are flourishing. Consumers globally are adopting these communication applications as they enable them to make voice calls and send / receive text messages over the internet for free or at a very low rate in comparison with mobile operators (Clark-Dickson & Talmesio, 2012). Through viral marketing, consumers are now increasingly aware of their smartphones being able to access communication services over the internet from third party providers as opposed to their mobile network operator. These providers are more commonly referred to as OTT providers, such as Google Voice, Skype, Viber, Facebook messenger, Whatsapp, Fring and many others.

OTT providers is a term coined by telecommunications practitioners to describe voice and messaging providers that support internet based communication which fly over the top or bypass an operator's voice network (Willetts, 2009). Figure 4 illustrates the new competitive environment between OTT providers and mobile / fixed network operators. OTT communication over a mobile broadband connection competes directly with an operator's core business by substituting traditional voice and messaging services with MVOIP and MIM communication respectively. Internet communication is billed at the data tariff per kilobyte (kb) which is far cheaper than billing per minute over a conventional voice network. OTT providers today have only a small impact on mobile operators' voice and messaging revenues since their user base is still comparatively small, however once the service uptake increases, mobile operators stand to lose millions (Clark-Dickson & Talmesio, 2012). MIM and MVOIP OTT services are described in detail below.

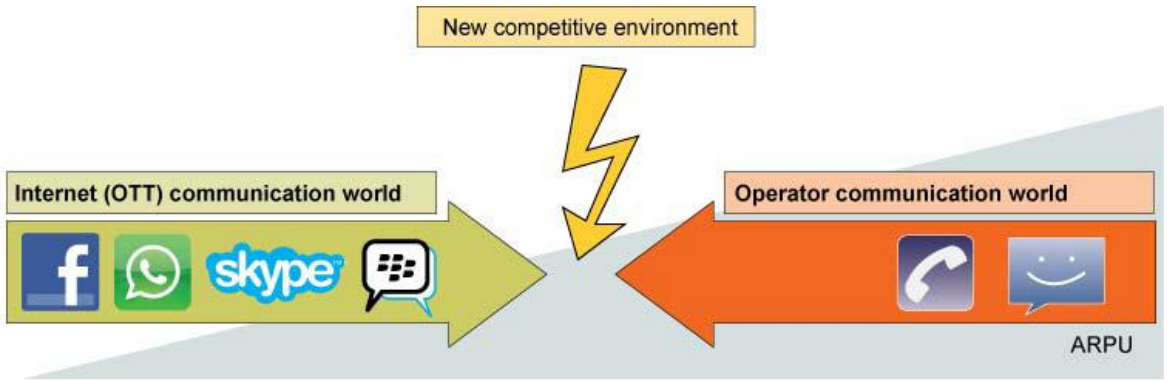

(Source: Informa Telecoms and Media - 2012)

Figure 4: OTT providers vs. mobile/fixed operators

2.4.1 Mobile Instant Messaging (MIM)

According to Ke and Li (2009) MIM is the ability to engage in instant messaging from a mobile handset via various bearer technologies, including Wireless Access Protocol (WAP), General Packet Radio Service (GPRS) and 3G. MIM users have the added advantage of mobility and are able to exchange Instant Messages (IM) with other mobile IM users as well as fixed IM users on networks such as Google Chat and Yahoo Messenger (Ke & Li, 2009).

With the expansion of mobile broadband subscriptions and increasing smartphone penetration globally, instant messaging communication via mobile phones is now becoming an inevitable trend. IM has spread from PCs to mobile phones, thus allowing users to be online without being in front of a PC. IM and MIM communication share many unique capabilities, including features such as synchronicity, presence awareness, chosen and interoperability (To et al., 2008). The MIM synchronicity feature provides near-synchronous information exchange between sender / receiver, and near-immediate confirmation of exchanged messages, making the transaction almost like a telephone conversation, except that it is text-based (Huang & Yen, 2003). Moreover, MIM offers users the ability to instantly create private chat rooms as well as facilitates sharing of images, music files, documents, or even streaming content such as stock quotes or game scores (Huang & Yen, 2003).

IM's presence awareness feature allows users to quickly determine whether their communication partners are online and whether they are available to communicate (Huang & Yen, 2003). With presence status such as online, offline, absent, busy, etc., one can know whether the corresponding person is available or not, before initiating contact. According to To et al. (2008) and Ke and Li (2009), presence awareness creates a sense of connectivity among users even with no dialogue in place. This is similar to when many people are in the same room together and one can sense the presence of others without actually engaging in conversation with them.

With MIM's 'chosen' feature, all subjects in the contact list are chosen and confirmed by the user. Hence no unfamiliar users or even spam messages can creep into any conversation (To et al., 2008). This feature ensures direct transfer of information between users without the added complication of spam and privacy issues found in e-mail or Internet applications (To et al., 2008). Further, MIM applications are community based, meaning that only users within the same community are able to communicate with one another (Clark-Dickson & Talmesio, 2012). For example, Whatsapp users are not able to communicate with users of BBM.

Mobile consumers are able to download compatible MIM applications for their mobile devices or smartphones to enable them to chat to other users within the same community for free or at a very low cost. MIM applications aim to provide a free replacement for SMS, however users will still need to buy a smartphone and sign up for an unlimited mobile-data plan. Popular MIM applications include BlackBerry Messenger, Whatsapp Messenger, Facebook Messenger and Mxit. It integrates seamlessly with a subscriber's existing mobile address book, and once activated, does not require a username and password each time the service is used. An example of the Whatsapp's graphical user interface for the iPhone can be seen in Figure 5 below.



(Source: Whatsapp, 2012)

Figure 5: Whatsapp Graphical User Interface for iPhone

2.4.2 Mobile Voice-over-IP (MVOIP)

Circuit switched (CS) voice used to be the only way to provide a voice service in cellular networks. The introduction of mobile broadband technology and smarter mobile phones made it possible to run Voice-over-IP (VoIP) over cellular data networks with reasonable voice quality. MVoIP is a real time communication technology which allows users to send and receive voice calls via an internet connection on a mobile device (Campbell, 2012). MVOIP calls are carried over an operator's data network and not via traditional circuit switched voice networks, which attract high per minute call charges. Users can download compatible MVOIP applications onto their mobile device or smartphone to enable them to talk to other users of the same community for free or at a reduced rate in comparison with CS calls. Call control for MVOIP is handled by third party service providers such as Google voice, Skype, Viber and Fring. The mobile operator only provides a bearer for transporting the VOIP data packets over the internet. MVOIP applications integrate seamlessly with a subscriber's existing mobile address book, and once activated, does not require a username and password each time the service is used. An example of the Viber's graphical user interface for the iPhone can be seen in Figure 6 below.



(Source: Viber Media, 2012)

Figure 6: Viber's Graphical User Interface for iPhone

2.5 Mobile telecommunications Industry in South Africa

Mobile cellular communications was launched in South Africa in the early 1990's, with the first mobile operator being Vodacom South Africa. Today, South Africa's mobile communication sector is dominated by four major mobile network operators (i.e. Vodacom, MTN, Cell C and 8.ta), all of which compete in a virtually saturated voice market (Lange, 2010). The total number of mobile subscribers recorded in South Africa is 51.1 million, with Vodacom holding the majority market share (48.3%), followed by MTN (36%), CellC (14.9%) and lastly 8ta (0.6%) (Business Monitor International, 2011). According to Lange (2010), prepaid users represent more than 80% of the total mobile subscriber base in South Africa.

The large number of cell phone users in the country provides an opportunity for mass Internet access via mobile phones (Lange, 2010). Hence MNOs look toward mobile broadband as being the next growth wave in the industry. According to research by World Wide Worx (2012), broadband access in South Africa more than doubled in the last two years as mobile operators slashed the cost of data and network roll-outs accelerated. The total number of broadband subscriptions grew by 128%, from 3.6-million at the end of 2010 to 8.2-million by the end of 2012 (World Wide Worx, 2012). Mobile operators Vodacom and MTN continue to dominate the mobile broadband market in South Africa. Both operators have been aggressive in their 3G rollouts as well as their promotional activities to flood the market with affordable smartphones, laptops, tablet computers and 3G dongles as part of their data offering.

The demand for online content is growing in South Africa and the mobile phone is fast becoming the tool to cross the digital divide. Popularity of social networking sites (e.g. Facebook and twitter) and mobile communication applications (e.g. Whatsapp and Mxit) will certainly lead to an increase in data traffic on the network. However, the growth in data traffic could come at the cost of mobile voice and SMS services. The deregulation of VoIP Internet telephony in 2005 marked the beginning of a fundamental change in the country's telecoms landscape (Lange, 2010), especially since OTT VOIP providers such as Skype could replace traditional voice calls, and MIM providers such as Whatsapp could replace SMS.

According to Muller (2012), popular MIM applications utilised in South Africa are BBM, Mxit and Whatsapp. Mobile VOIP, on the other hand is still very much in its infancy stage in South Africa (Moyo, 2012). According to World Wide Worx managing director Arthur Goldstuck, MVOIP applications have already been downloaded by many South Africans, however due to interoperability issues amongst applications, the service uptake has been extremely poor (Moyo, 2012).

2.6 MIM adoption theory

Due to the prevalence of smarter mobile phones and the advancement of wireless telecommunication networks in recent years, computer-based internet communication such as instant messaging have also appeared in mobile phones (Barnes, 2002; Deng, Lu, Wei, & Zhang, 2010; Yan, 2003). IM has spread from personal computers to mobile phones (Ke & Li, 2009). Mobile IM (or MIM) is gaining increasing popularity amongst cell phone users globally and has started to change the way in which people communicate.

There has been extensive research on the adoption of computer-based IM communication, including studies by Huang and Yen (2003), Luo, Gurung, and Shim (2010), Peslak, Ceccucci, and Sendall (2010) and To et al. (2008). However very little research is associated with the adoption of MIM as it is a relatively new technology, only having emerged within the last couple of years. The available literature on the adoption of MIM is limited to studies carried out in China, which is understandable since the Chinese mobile telecommunications market is one of the largest in the world (Ke & Li, 2009). For example, a study by Ke and Li (2009) examined the factors affecting the adoption of Mobile Instant Messaging in China and a study by Deng et al. (2010) examined the determinants of customer satisfaction and loyalty for mobile instant messages in China.

Several technology acceptance and adoption theories have been developed to examine and understand the factors affecting the adoption of computer based applications in organisations (Al-Majali, 2011). The theoretical frameworks include the Theory of Reasoned Action (TRA) by Fishbein and Ajzen (1975), the

Technology Acceptance Model (TAM) by Davis, Bagozzi, and Warshaw (1989), the Theory of Planned Behaviour (TPB) by Ajzen (1991), Innovation Diffusion Theory (IDT) by Rogers (1995), the Decomposed Theory of Planned Behaviour (DTPB) by Taylor and Todd (1995) and the Unified Theory of Acceptance and Use of Technology model (UTAUT) by Venkatesh, Morris, Davis, and Davis (2003).

The research framework employed in this study is based on the decomposed theory of planned behaviour (DTPB) and examines the factors which influence the adoption of mobile instant messaging in South Africa. In this section, various technology acceptance and adoption frameworks are discussed, and an investigation to demonstrate the reasons for choosing the DTPB as a framework for research is presented.

2.6.1 Technology Acceptance Theories

Technology adoption research has seen the application of a wide range of theories and models from different academic fields, such as TRA by Fishbein and Ajzen (1975), TAM by Davis et al. (1989), TPB by Ajzen (1991), IDT by Rogers (1995), DTPB by Taylor and Todd (1995) and UTAUT by Venkatesh et al. (2003).

TRA by Fishbein and Ajzen (1975) proposed that an individual's actual behaviour is determined by the person's intention to perform the behaviour, and this intention is influenced jointly by the individual's attitude and subjective norm (Fishbein & Ajzen, 1975; Teo & Pok, 2003). Attitude is defined as the degree to which the individual favours the behaviour being examined (Ajjan & Hartshorne, 2008; Ajzen, 1991). Attitude towards a behaviour is determined by a person's salient beliefs about the consequences of that behaviour and the evaluation of the desirability of the consequences (Teo & Pok, 2003). Subjective norms, according to Ajjan and Hartshorne (2008), refer to the social pressures that make an individual perform a particular behaviour.

TAM by Davis et al. (1989) is an adaptation of TRA and posits that an individual's behavioural intention to use a new technology is determined by two beliefs, namely perceived usefulness (defined as the extent to which a person believes that using a technology will enhance his or her job performance) and perceived ease of use (defined as the degree to which a person believes that using a new technology will be free of effort) (Davis, 1989; Luo et al., 2010). According to TAM, beliefs influence attitude, attitude influences intention and intention influences behaviour (Luo et al., 2010; Van der Heijden, 2004).

TPB by Ajzen (1991) is another variant of TRA and was derived to overcome the original model's limitations by introducing an additional factor called 'perceived behavioural control' to account for situations where individuals do not have complete control over their behaviour (Ajzen, 1991; Teo & Pok, 2003). According to TPB, behavioural intention is formed by one's attitude, subjective norm and perceived behavioural control, which reflects perceptions of internal and external constraints on behaviour (Ajzen, 1991).

IDT by Rogers (1995) is yet another prevalent model used in Information Systems (IS) research to explain user adoption of new technologies. According to Rogers (1995) innovation is an idea perceived as new by the individual and diffusion is the process by which an innovation spreads. Hence the diffusion process results in the acceptance or penetration of a new idea, behaviour, or physical innovation (Luo et al., 2010; Rogers, 1995). IDT has identified five important characteristics of an innovation to make it successful. These include relative advantage, compatibility, complexity, communicability, and trialability (Rogers, 1995). Venkatesh et al. (2003) suggested that relative advantage is equivalent to perceived usefulness and that complexity is equivalent to perceived ease of use. Moreover, according to Carter and Bélanger (2005) and Luo et al. (2010), relative advantage, compatibility, and complexity (i.e. perceived ease of use) are the most relevant constructs for adoption research.

DTPB by Taylor and Todd (1995) is an extension of TPB. It further decomposes attitudes, subjective norms and perceived behavioural control into lower level belief constructs in order to provide a higher descriptive power and a more

accurate understanding of the antecedents of behaviour (Al-Majali, 2011). Moreover, the DTPB incorporates constructs from the IDT model by decomposing attitude into lower level belief constructs which include relative advantage, compatibility, and perceived ease of use. Subjective norms are decomposed into referent groups (e.g. peers and superiors), and perceived behavioural control is decomposed into self-efficacy and facilitating conditions. Self-efficacy refers to an individual's perceived capability to perform a particular behaviour and facilitating conditions deals with the availability of resources such as the time, money and other resources required to facilitate a particular behaviour (Ajjan & Hartshorne, 2008).

UTAUT by Venkatesh et al. (2003) is based on a mixture of eight main models that have been used to understand technology acceptance behaviour (Al-Majali, 2011). Venkatesh et al. (2003) employed this approach in order to reach a unified view of users' technology acceptance (Al-Majali, 2011; Venkatesh et al., 2003). UTAUT suggests that behavioural intention and usage is a function of four key constructs, including performance expectancy, effort expectancy, social influences and facilitating conditions. Performance expectancy is equivalent to relative advantage employed in IDT, while effort expectancy is equivalent to perceived ease of use employed in TAM (Al-Majali, 2011). Moreover, social influence is equivalent to subjective norms employed in TPB. The effects of gender, age, experience, and voluntariness of use, according to Venkatesh et al. (2003), is suggested to have a moderating impact on the four key constructs and ultimately behavioural intention and usage.

In summary, the DTPB according to Teo and Pok (2003) is considered to be a far more superior model when compared to TRA, TAM and TPB (see discussion in section 2.6.2 below). Also, since the UTAUT model is an emerging model, it does not clearly illustrate how external variables would affect the usage behaviour and intentions in different contexts (Luo et al., 2010). Hence, for these reasons, the DTPB was adopted as a framework for research in this study.

2.6.2 The Decomposed Theory of Planned Behaviour (DTPB)

As a framework for research, the DTPB offers several advantages over the other models. First, it is unlikely that monolithic belief structures (i.e. those found in TPB) that represent a variety of dimensions will be consistently related to the antecedents of intention (Bagozzi, 1981; Shimp & Kavas, 1984; Teo & Pok, 2003). Second, the DTPB faces fewer problems in operationalisation as decomposition provides a stable set of beliefs which can be applied across a variety of settings (Berger, 1993; Teo & Pok, 2003).

Third, by focusing on specific beliefs, the model becomes more managerially relevant by identifying specific factors that may influence adoption and usage (Teo & Pok, 2003). Fourth, the DTPB is a more superior model when compared to TAM, even though both models share many similarities (Taylor & Todd, 1995). This is because the DTPB has incorporated several factors that were found to be important determinants of behaviour, such as the influence of significant others (Ajzen, 1991). Consequently the DTPB provides a more complete understanding of technology usage relative to TAM (Teo & Pok, 2003).

Lastly, of the many recent technology adoption studies carried out by Teo and Pok (2003), Ajjan and Hartshorne (2008), To et al. (2008) and Ke and Li (2009), all researchers chose to adopt the DTPB as their guiding framework. Hence this was considered sufficient motivation to adopt the DTPB as a framework for research. Figure 7 below shows the DTPB framework employed in the study by Ke and Li (2009) to determine the factors that influence the adoption of MIM in China.

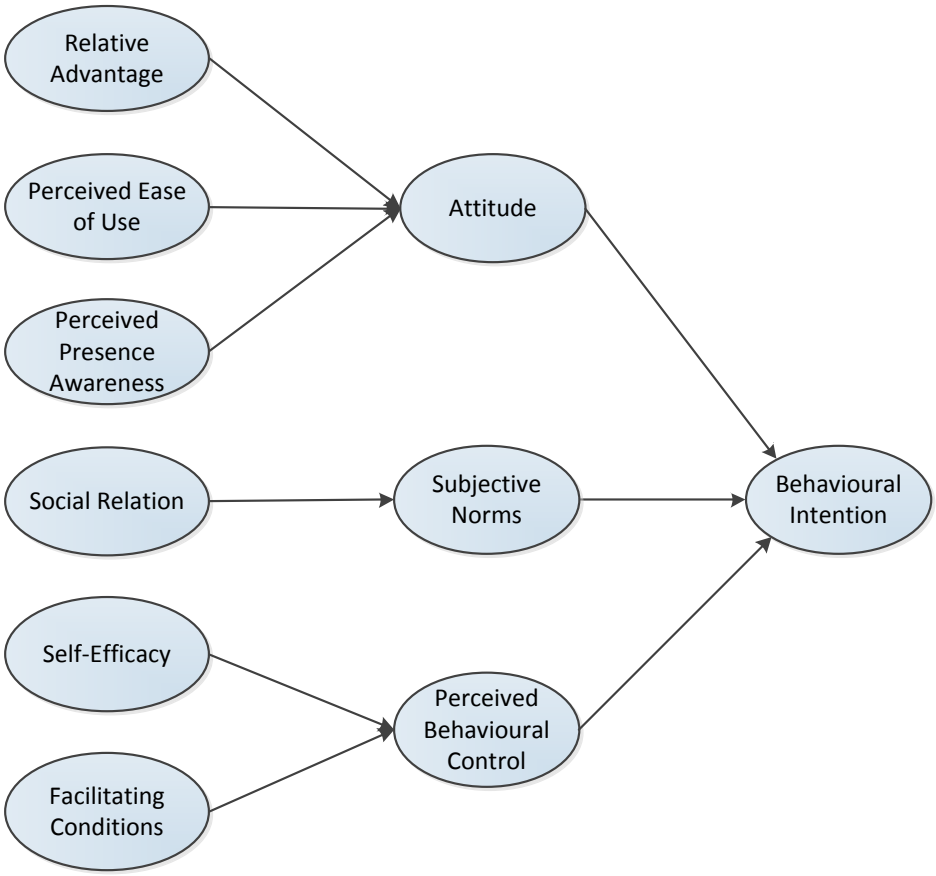

Figure 7: Decomposed Theory of Planned Behavior (DTPB) - (Ke and Li, 2009)

The study by Ke and Li (2009) is of particular importance as it matches the research objectives in this study very closely. Ke and Li (2009) examined the factors which influence the adoption of MIM in China, which is very similar to what is being investigated in this study. The model by Ke and Li (2009) (Figure 7) is used as a reference point for developing the research model in this study as it is based on a similar study carried out in China and also employs the DTPB as its guiding framework. Both the TPB (Ajzen, 1991) and the DTPB (Ke & Li, 2009; Taylor & Todd, 1995) assert that actual behaviour is a direct function of behavioural intention and both view behavioural intention as a function of attitude, subjective norms and perceived behavioural control. Hence the DTPB (Figure 7) excludes actual behaviour given the close relationship between behaviour and behavioural intention.

Attitude toward the behaviour is defined as the degree to which the individual favours the behaviour being examined (Ajjan & Hartshorne, 2008; Ajzen, 1991). Attitude has a positive effect on behavioural intention; the higher the attitude the higher the behavioural intention (Ajzen, 1991; Ke & Li, 2009; Taylor & Todd, 1995; To et al., 2008). According to the DTPB (Figure 7) attitude is a function of relative advantage, perceived ease of use and perceived presence awareness (PPA). Relative advantage, according to Teo and Pok (2003), refers to the degree to which adopting a new technology is perceived as being better than the practice it supersedes, while perceived ease of use refers to the degree to which people believe that using a new technology will be free of effort (Davis, 1989). Further, perceived presence awareness is a unique characteristic of IM that allows IM users to know who is online and what their status is (McClea et al., 2004; To et al., 2008).

Subjective norms refer to the social pressures that make an individual perform a particular behaviour (Ajjan & Hartshorne, 2008; Ajzen, 1991). According to Ke and Li (2009), people's intention to perform a particular behaviour is a function of their perception that important others think they ought to do so. The higher the subjective norm, the higher the behavioural intention would be (Ajzen, 1991; Ke & Li, 2009; Taylor & Todd, 1995; To et al., 2008). According to the DTPB (Figure 7) subjective norms is a function of social relations which comprise of referent groups such as friends, family and colleagues.

Perceived behavioural control accounts for situations where individuals do not have complete control over their behaviour and is made up of two components: self-efficacy and facilitating conditions (Ajjan & Hartshorne, 2008; Ke & Li, 2009). Self-efficacy refers to an individual's perceived capability to perform a particular behaviour and facilitating conditions deals with the availability of resources such as the time, money and other resources required to facilitate a particular behaviour (Ajjan & Hartshorne, 2008).

2.7 Research Model and Hypotheses Development

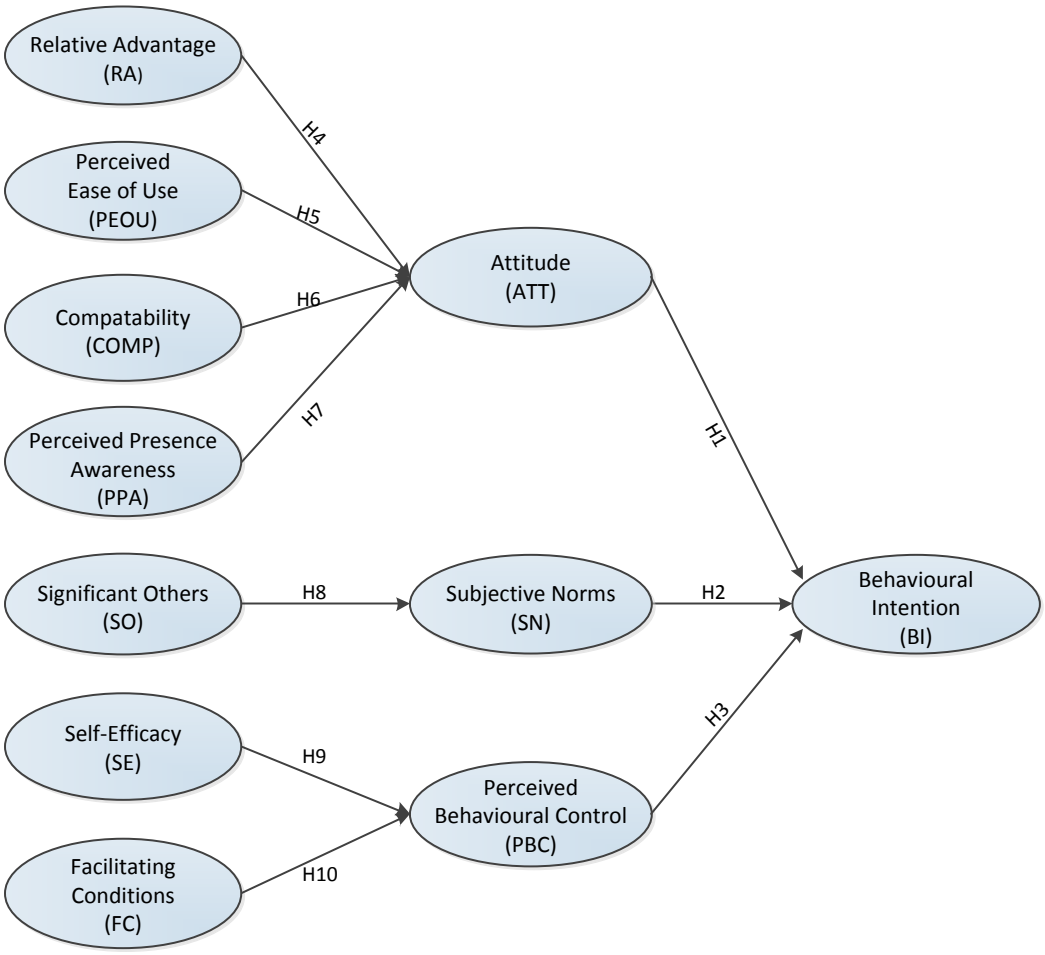

Figure 8: The Research Model – MIM adoption in South Africa

The research model developed in this study (Figure 8) is based on DTPB by Ke and Li (2009) as a theoretical framework to determine the factors that influence the adoption of MIM in South Africa. It decomposes attitude (ATT) into Relative Advantage (RA), Perceived Ease of Use (PEOU), Compatibility (COMP) and Perceived Presence Awareness (PPA). According to the Innovation Diffusion Theory by Rogers (1995), compatibility is a necessary determinant of attitude, hence it was incorporated in the model (Figure 8).

Significant Others (SO) according to Teo and Pok (2003) and Ke and Li (2009), consist of referent groups such as friends, family and colleagues / peers. Perceived Behavioural Control (PBC), according to DTPB (Figure 7) comprises of

Self-Efficacy (SE) and Facilitating Conditions (FC). To derive the complete set of research hypotheses in this study (Figure 8), it was necessary to further decompose Behavioural Intention (BI), attitude, Subjective Norms (SN) and perceived behavioural control into their various belief constructs.

2.7.1 Behavioural Intention (BI)

In accordance with the DTPB (Ke & Li, 2009; Taylor & Todd, 1995), behavioural intention toward adopting MIM for mobile communication is positively associated with attitude, subjective norms and perceived behavioural control. Hence the following hypotheses apply:

H1. *Attitude has a positive effect on behavioural intention of MIM adoption.*

H2. *Subjective norm has a positive effect on behavioural intention of MIM adoption*

H3. *Perceived behavioural control has a positive effect on behavioural intention of MIM adoption*

2.7.2 Attitude

As illustrated in Figure 8 above, relative advantage, perceived ease of use, compatibility and perceived presence awareness belief constructs all have a positive effect on attitude. The Innovation Diffusion Theory (Rogers, 1995), suggests that the perceived relative advantage of an innovation is positively associated to its rate of adoption. According to Ke and Li (2009) and Cameron and Webster (2005), MIM is considered to be an innovative communication tool. It has the ability to engage in IM from a mobile handset, it supports innovative features like presence, synchronicity, chosen and so on. Hence in view of its advantages and in accordance with the DTPB (Figure 7) the following hypothesis applies.

H4. *Relative advantage has a positive effect on attitude of MIM adoption.*

Perceived ease of use (PEOU) has to do with the belief that the use of the new technology will be free of effort (Ajjan & Hartshorne, 2008; Davis, 1989). PEOU gives an indication of the cognitive effort needed to learn and utilise the new technology (Gefen, Karahanna, & Straub, 2003). According to Davis (1989) and Taylor and Todd (1995), the effect of PEOU has been found to have a positive impact on attitude, hence in this study the researcher proposes that PEOU has a positive effect on attitude toward MIM adoption.

H5. *Perceived ease of use has a positive effect on attitude of MIM adoption.*

Compatibility is the degree to which the innovation fits with the potential adopter's existing values, previous experiences and current needs (Teo & Pok, 2003). According to the Innovation Diffusion Theory, the greater the compatibility of an innovation the faster it's rate of adoption (Chen, Gillenson, & Sherrell, 2002; Rogers, 1995). Hence in accordance with the DTPB by To et al. (2008) and the IDT by Rogers (1995) the following hypothesis applies:

H6. *Compatibility has a positive effect on attitude of MIM adoption.*

Perceive Presence awareness is a defining characteristic of MIM (Cameron & Webster, 2005; To et al., 2008). With presence awareness, a sense of connectivity is formed among users even with no dialogue in place. This is similar to when many people are in the same room together and one can sense the presence of others without actually engaging in any conversation with them (Ke & Li, 2009; To et al., 2008). With presence awareness, MIM users are able to know who is online and what their status is (Ke & Li, 2009). According to Social Presence Theory, the critical factor of a communication medium is its social presence which is defined as the "degree of salience of the other person in the interaction and the consequent salience of the interpersonal relationships" (Ke & Li, 2009; Sallnäs, Rassmus-Gröhn, & Sjöström, 2000). Moreover, users are more or less aware of the degree of social presence inherent in a communication medium and choose to use a medium that they perceive to be appropriate for a given task or purpose (Sallnäs et al., 2000). Hence in accordance with the DTPB (Figure 7) the following hypothesis applies.

H7. *Perceived presence awareness has a positive effect on attitude of MIM adoption.*

2.7.3 Subjective Norms

According to Ke and Li (2009), users may believe that their family members, friends, peers and colleagues (i.e. significant others) would favour certain behaviours, and this belief tends to influence their intentions and behaviour. People's intentions to perform a particular action are a function of their subjective norm, or their perception that important others think they ought to do so (Ke & Li, 2009). Hence in accordance with the DTPB by Ke and Li (2009), the following hypothesis applies:

H8**. "***Significant Other" has a positive effect on subjective norm of MIM adoption*

2.7.4 Perceived behavioural control

Perceived behavioural control refers to an individual's perception of whether a behavioural act is within their control (Ke & Li, 2009; Taylor & Todd, 1995). PBC reflects beliefs regarding access to resources and opportunities required to facilitate behaviour (Ke & Li, 2009). According to Taylor and Todd (1995), PBC is an important determinant of intention and use of technology. Moreover, Ke and Li (2009) decomposed PBC into self-efficacy and facilitating conditions.

Self-efficacy is defined as an individual's perceived capability to perform a particular behaviour (Taylor & Todd, 1995). It is not concerned with the skills one has but with judgments of what one can do with whatever skills one possesses (Ke & Li, 2009). For MIM, self-efficacy represents an individual's perception of his or her ability to use a smartphone to send and receive instant messages to other MIM or IM users. Previous studies have found that higher self-efficacy is related to higher levels of behavioural intention and usage (Taylor & Todd, 1995). Hence in accordance with the DTPB (Figure 7) the following hypothesis applies:

H9. *Self-efficacy of using MIM positively affects perceived behavioural control.*

Absence of facilitating conditions such as time, money and resources could present a barrier to usage and to the formation of intention (Taylor & Todd, 1995). Mobile operators play an important role in facilitating the adoption of MIM among potential users. Operators must support MIM technology, expand their broadband footprint, increase smartphone penetration and reduce data tariffs on their network (Clark-Dickson & Talmesio, 2012). Hence in accordance with the DTPB (Figure 7) the following hypothesis applies:

H10. *Facilitating conditions for using MIM positively affect perceived behavioural control.*

2.8 Conclusion of Literature Review

The increased penetration of smartphones and mobile broadband connections globally has fostered an environment that is favourable for mobile internet communication. Consumers are now downloading over-the-top MVOIP and MIM applications onto their smartphones and tablet computers to support voice calling and text messaging over the internet for free or at much lower rates in comparison with mobile operators voice and SMS services. Mobile internet applications such as Skype, Viber, Whatsapp and Mxit are now gaining traction among smartphone users, and network operators are increasingly concerned about the impact these providers will have on their voice and SMS revenues.

In South Africa however, MVOIP is very much in its infancy stage (Moyo, 2012). According to World Wide Worx managing director Arthur Goldstuck, MVOIP applications have already been downloaded by many South Africans, however due to interoperability issues amongst applications, the service uptake has been extremely poor (Moyo, 2012). For this reason, MVOIP was excluded in this study as its service uptake is relatively small in comparison to MIM adoption in South Africa. Also, sourcing survey respondents for MVOIP would have proven to be a challenge in its own. That being said, this study attempts to identify the factors that influence the adoption of MIM as a means of communication in South Africa. The research is of paramount importance to MNOs in South Africa as it can assist

with strategy formulation, as well as give insight into the fundamental shifts in human communication behaviour. The research model employed in this study relies upon the DTPB by Ke and Li (2009) as a theoretical framework to identify the factors that influence the adoption of MIM in South Africa. A summary of the hypotheses to be tested in this research are described below:

2.8.1 Behavioural Intention

H1. *Attitude has a positive effect on behavioural intention of MIM adoption.*

H2. *Subjective norm has a positive effect on behavioural intention of MIM adoption*

H3. *Perceived behavioural control has a positive effect on behavioural intention of MIM adoption*

2.8.2 Attitude

H4. *Relative advantage has a positive effect on attitude of MIM adoption.*

H5. *Perceived ease of use has a positive effect on attitude of MIM adoption.*

H6. *Compatibility has a positive effect on attitude of MIM adoption.*

H7. *Perceived presence awareness has a positive effect on attitude of MIM adoption.*

2.8.3 Subjective Norms

H8**. "***Significant Other" has a positive effect on subjective norm of MIM adoption*

2.8.4 Perceived Behavioural Control

H9. *Self-efficacy of using MIM positively affects perceived behavioural control.*

H10. *Facilitating conditions for using MIM positively affect perceived behavioural control.*

CHAPTER 3: RESEARCH METHODOLOGY

This chapter describes the methodology that was followed to address the research hypotheses described in the literature review.

3.1 Quantitative Research

Quantitative research is based on what is commonly called positivist philosophy, where investigators believe that social observations should be treated as entities in much the same way that physical scientists treat physical phenomena (Johnson & Onwuegbuzie, 2004). It is an objective investigation of social phenomena using statistical, mathematical or computational techniques.

Quantitative research methods posit that the researcher and the research object being investigated are independent entities, in the sense that the researcher is able to study the phenomena without being influenced by it or vice versa (Al-Majali, 2011). Further, the process of measurement is central to quantitative research and involves the use of structured protocols, administered surveys and experiments in the collection of data.

Quantitative research according to Walker (2005) and Koch and Harrington (1998), is based on a systematic and methodological process, hence it was deemed appropriate for this study. It places considerable value on rationality, objectivity, prediction and control (Streubert & Carpenter, 1999; Walker, 2005). These trends and traits of positivists' research are primary to the main objectives of this study, that is, to assess behavioural intention to adopt MIM by employing hypotheses testing that requires quantitative techniques to deal with the data.

Moreover, quantitative research methods were successfully employed in similar studies based on the DTPB, including Ke and Li (2009), To et al. (2008), Ajjan and Hartshorne (2008) and Teo and Pok (2003).

3.2 Survey Approach

A survey is a research instrument typically used in applied social research (Kelley, Clark, Brown, & Sitzia, 2003). A common goal of a survey is to collect data representative of a population, where the population of interest is seen as a wider group of people in which the researcher is interested in a particular study (Kelley et al., 2003). The researcher thereafter uses information gathered from a sample of individuals to make some inferences back to the wider population within the limits of random error (Kotrlik & Higgins, 2001). Surveys can be administered from remote locations including mail, email, telephone or an online survey via the internet.

A survey approach is appropriate for this study as it is based on social research to determine the factors which influence consumers' behavioural intention to adopt MIM for communication. The use of surveys has many advantages including being relatively inexpensive, especially the self-administered type. It is useful in describing the characteristics of a large population, making the results statistically significant even when analysing multiple variables (Colorado State University, 2013). The use of standardised questions enforce uniform definitions upon participants, making measurements more precise and reliable (Colorado State University, 2013). On the other hand, surveys also have disadvantages which may include misinterpretation, superficially answering questions or the unwillingness to answer certain questions (Milne, 1999).

In this study, data collection was facilitated by means of an online survey as it fitted well with the main objectives of the research, being MIM communication facilitated via the mobile internet.

3.3 Population and sample

3.3.1 Population

The population examined in this study encompassed the entire mobile cellular subscriber base in South Africa. The demographic profile of the population includes people from various race groups, including Black, Coloured, Indian and White, all having various income levels, age groups, and educational qualifications.

3.3.2 Sample and sampling method

Data collection or sampling was facilitated by means of an online survey via the internet. All respondents were contacted via email to participate in the online survey, hence the sample included both male and female respondents that had valid e-mail accounts and were able to access the internet via their personal computers, tablet computers or smartphones.

A snowball sampling methodology was utilised to obtain the sample data. All respondents were encouraged to forward the survey to their working colleagues and personal networks. For this reason the exact sampling frame cannot be quantified. The sample is therefore a non-probability one since it was gathered in a process that did not give all the individuals in the broader population an equal chance of being selected (Fricker, 2008). This methodology was deemed appropriate as it was used to gain access to a large sample of individuals. The initial sample of survey respondents included family, friends, work colleagues, Masters in Business Administration (MBA) students and Facebook contacts.

3.4 The research instrument

The research instrument utilised was an online survey hosted on the Survey Monkey internet website which is described in appendix B of this report. All respondents were sent e-mails explaining the purpose of the study, the intention

of the survey, and a statement guaranteeing the confidentiality of all the respondents. A link to the online survey was also included in the e-mail. Both the e-mail and survey were written in English and designed to be as neutral and as objective as possible. The questionnaire or online survey consisted of four pages with two parts. Part one consisted of eleven questions pertaining to the respondent's demographic profile, as well as important filtering questions to determine if the respondent did in-fact use MIM for communication. If the responses to the filtering questions indicated that the respondent did not use MIM for communication, then the respondent was directed to the exit page of the survey as he would be unable to answer subsequent questions in part two. The questionnaire items relating to the demographic profile of the respondents were measured using nominal and ordinal scales and included items such as gender, ethnic group, age, highest level of education, profession, mobile tariff plan, type of IM applications used, personal or business usage and the type of MIM services used.

Part two of the online survey consisted of questionnaire items pertaining to the eleven constructs depicted in the research model (Figure 8). A construct, according to Hair et al. (2010), is an unobservable or latent concept that can be defined in conceptual terms but cannot be measured directly. Instead, constructs are measured indirectly by examining consistency among multiple measured variables, which may also be referred to as manifest variables or indicators (Hair et al., 2010). In this study, each research construct comprises of four measured variables. Table 1 below shows the relationship between each measured variable and its corresponding construct under investigation. Additionally, Table 1 shows the Cronbach's Alpha (α) statistic for each construct and gives the source reference where each of the questionnaire items were adopted from.

The responses to the questionnaire items in part two were measured using a Likert scale, since it is a widely used measurement scale for social science research (Shih & Fang, 2004). A seven-point Likert scale was utilised to measure the variables in this study, with (1) being strongly disagree, and (7) being strongly agree.

Table 1: Measurement of Variables

Construct	Variable	Statements	Cronbach Alpha	Source
Behavioural Intention	BI1	I intent to use mobile instant messaging for communication	.85	(Bhattacherjee, 2000) (Taylor & Todd, 1995)
	BI2	I intend to use mobile instant messaging frequently.		
	BI3	I intend to use mobile Instant Messaging rather than SMS or MMS for communication.		
	BI4	I intend to use mobile instant messaging for chatting, sharing pictures, music and video clips.		
Attitude	ATT1	Using mobile instant messaging would be a good idea.	.90	(Nor, Shanab, & Pearson, 2008) (Taylor &
	ATT2	I like the idea of using mobile instant messaging.		
	ATT3	Using mobile instant messaging is a pleasant idea.		
	ATT4	Using mobile instant messaging is an appealing idea.		
Subjective Norms	SN1	People who are important to me think that I should use mobile instant messaging.	.86	(Nor et al., 2008)
	SN2	People who are close to me think that I should use mobile instant messaging.		
	SN3	People who influence my behaviour think that I should use mobile instant messaging.		
	SN4	People who influence my decisions think that I should use mobile instant messaging.		
Perceived Behavioural Control	PBC1	I would be able to use instant messaging applications.	.86	(Shih & Fang, 2004)
	PBC2	I have the resources (mobile phone, time and money) to use mobile instant messaging.		
	PBC3	I have the knowledge to use mobile instant messaging.		
	PBC4	I have the ability to use mobile instant messaging		
Relative Advantage	RA1	Mobile Instant Messaging improves my efficiency.	.87	(Peslak et al., 2010)
	RA2	Mobile Instant Messaging improves my productivity.		
	RA3	Mobile Instant Messaging allows me to accomplish my tasks more quickly.		
	RA4	Mobile Instant Messaging provides an overall advantage to me.		
Perceived Ease of Use	PEOU1	Learning to operate instant messaging applications would be easy for me.	.70	(Ho & Ko, 2008) (Moore & Benbasat, 1991)
	PEOU2	It is easy for me to be skilful at using mobile instant messaging.		
	PEOU3	I find it easy to get instant messaging applications to do what I want it to do.		
	PEOU4	I find mobile instant messaging cumbersome to use.		
Compatibility	COMP1	Using mobile instant messaging is compatible with my lifestyle.	.89	(Peslak et al., 2010; Teo & Pok, 2003)
	COMP2	Using mobile instant messaging is compatible with the way I like to communicate.		
	COMP3	Using mobile instant messaging fits well with my communication preferences.		
	COMP4	I think mobile instant messaging fits well with all aspects of my communication activities.		

Table 1: Measurement of Variables Continued.

Construct	Variable	Statements	Cronbach Alpha	Source
Perceived Presence Awareness	PPA1	It "feels" as though the people on my "contact list" that are logged on are nearby.	.85	(Washington, 2001)
	PPA2	Knowing the status of people on my contact list allows me to access people at any time of day or night.		
	PPA3	Knowing the status of the people on my "contact list" makes me feel connected with them.		
	PPA4	It is as though the people on my "contact list" that are logged on are around me.		
Significant Others	SO1	My decision to adopt mobile instant messaging will be influenced by my family members.	.78	(Taylor & Todd, 1995; Teo & Pok, 2003)
	SO2	My decision to adopt mobile instant messaging will be influenced by my friends.		
	SO3	My decision to adopt mobile instant messaging will be influenced by my work colleagues / peers.		
	SO4	I will use mobile instant messaging because my friends and family use it.		
Self-Efficacy	SE1	I am confident of using mobile instant messaging if I have just seen someone using it before trying it myself.	.65	(Ajjan & Hartshorne, 2008) (Teo & Pok, 2003)
	SE2	I know enough to operate instant messaging applications on my own		
	SE3	I am confident of using mobile instant messaging even if there is no one around to show me how to do it.		
	SE4	I am confident of using mobile instant messaging even if I have never used such an application before.		
Facilitating Conditions	FC1	Mobile instant messaging is compatible with the cellular handset I'm currently using.	.69	(Ajjan & Hartshorne, 2008) (Shih & Fang, 2004)
	FC2	My 2G / 3G network coverage is sufficient for mobile instant messaging		
	FC3	I have the time to use mobile instant messaging		
	FC4	I have the money to spend on instant messaging services.		

3.5 Procedure for data collection

The questionnaire used in this research can be found in Appendix B. Individual respondents in South Africa were contacted via email to complete the online questionnaire. The email included a letter to the respondents, explaining the title of the study, the purpose of the questionnaire and motivating them to participate in the survey (Appendix A). A link to the online survey was included in the e-mail.

3.6 Data analysis and interpretation

Data analysis according to Ullah (2010), is a step that entails various activities such as inspecting, cleaning, transforming, and modelling data with the objective of highlighting useful information, suggesting conclusions, and supporting decision making. The data analysis in this study was carried out using IBM SPSS / AMOS statistics software version 20 and consisted of three steps. These included, data preparation, validating the measurement model, and fitting the structural model.

Structural Equation Modelling (SEM) was employed as the core data analysis approach in this study. According to Hair et al. (2010), SEM is defined as a combination of statistical modelling that studies the relationships of several latent constructs. SEM was chosen as it is a powerful technique to analyse causal relationships between latent constructs. Moreover, the use of SEM is consistent with many previous studies relating to social and behavioural sciences, including studies by Ke and Li (2009), To et al. (2008) and Teo and Pok (2003). The SEM process consists of two components, that is, first validating the measurement model and then fitting the structural model.

3.6.1 Data Preparation

Step one of the data analysis process involved preparing the raw data extracted from the Survey Monkey internet website. This was carried out using SPSS software version 20 and involved inspecting, cleaning and transforming the raw data in order to screen for missing data, outliers, normality, multi-collinearity, validity and reliability. Section 3.8 discusses validity and reliability in detail.

3.6.1.1 Missing Data

The first step of data preparation involves screening for missing data. According to Al-Majali (2011), missing data usually occurs when respondents refuse to answer questions of a personal nature with regards to their income earned, age, etc. Further, respondents may choose not to answer certain questions because of their ignorance of certain topics. Missing data can also occur as a result of technical issues experienced with a respondent's PC, poor internet connectivity, as well as problems with the online survey site. The treatment for missing data can be handled in many different ways, such as deleting incomplete cases or replacing the missing score with a calculated score (Kline, 2010). In this study a total of 45 incomplete cases were deleted.

3.6.1.2 Outliers

The detection and treatment of outliers was the next step in data preparation. According to Kline (2010), variable scores more than three standard deviations beyond the mean may be termed outliers. Outliers usually arise from procedural errors, such as data entry errors or mistakes in coding (Hair et al., 2010). Another reason for outliers is that sometimes observations of certain respondents may be extreme on a variable or a unique combination of values across several variables, hence making it stand out from the rest (Hair et al., 2010). Univariate outliers are determined by inspecting frequency distributions of z scores, where $|z| > 3.00$ indicates an outlier (Kline, 2010). The treatment of outliers according to Kline (2010) is to convert extreme scores to a value that equals the next most extreme score that is within three standard deviations of the mean. Hence, the above treatment of outliers was adopted in this study and the final z scores of all measured variables can be seen in appendix C of this report. The z scores in appendix C are all ≤ 3.00, with the only exception being indicator FC1 having a $|z|$ score of 3.03. FC1 was still considered acceptable, since it's $|z|$ score was only marginally greater than the threshold of 3.00.

3.6.1.3 Normality

Normality, according to Hair et al. (2010), is the most fundamental assumption in multivariate analysis. It refers to the shape of the data distribution for an individual metric variable along with its correspondence to the normal distribution curve (Hair et al., 2010). Skew and Kurtosis are two ways that a distribution can be non-normal and can occur either separately or together in a single variable (Kline, 2010). According to Kline (2010), 'skew' implies that the shape of a unimodal distribution is asymmetrical about its mean. Positive skew indicates that most scores are below the mean, while negative skew indicates the opposite (Kline, 2010).

According to Hair et al. (2010), 'kurtosis' refers to the peakedness or flatness of the distribution relative to a normal distribution. Positive kurtosis indicates heavier tails and higher peaks, while negative kurtosis indicates the opposite, with both relative to a normal distribution with the same variance (Kline, 2010). According to Kline (2010), data is normally distributed if the Skewness Index (SI) < ±3 and the Kurtosis Index (KI) < ±8. Appendix D of this report shows the results of the normality assessment. Scores for SI and KI are all within range, suggesting that the data is normally distributed.

However, it was worth considering that the data scale (i.e. Likert scale) may be partly responsible for non-normality. In this study, a seven point Likert scale was utilised to measure the indicator variables, which is essentially a forced choice ordinal response format. In such cases, according to Kline (2010), Little, Cunningham, Shahar, and Widaman (2002) and Bandalos and Finney (2001), the use of parcelling is encouraged. Whereby, indicators were combined into 'parcels' based on their inter-correlation coefficients, to generate a single variable that is more normally distributed, relative to each indicator. Accordingly, the use of parcelling was employed in this study and the conditions of normality described above were further improved.

3.6.1.4 Multicollinearity

Multicollinearity, according to Hair et al. (2010), is the extent to which a variable can be explained by the other variables in the analysis. Multicollinearity can be detected by simply inspecting the correlation matrix of the indicators in the analysis. If the correlation values are greater than 0.95, this suggests extreme collinearity (Kline, 2010). Further, the researcher examined the Variance Inflation Factors (VIF) of all indicator variables. According to Nor et al. (2008), VIF's greater than 10 indicates a multicollinearity problem. Appendix E of this report shows the results of the multicollinearity analysis. The inter-item correlations among indicators are less than .95 and the reported VIF scores are well below the threshold (i.e. 10), hence multicollinearity among the variables sets was deemed not to be a concern

3.6.2 The Measurement Model

The measurement model specifies how measured variables logically and systematically represent constructs involved in the theoretical model (Hair et al., 2010). A Confirmatory Factor Analysis (CFA) is used to provide a confirmatory test of the measurement theory and establish which indicator variables seem to measure the corresponding latent construct which cannot be measured directly (Hair et al., 2010). The CFA was executed on Amos using a maximum likelihood estimation method (Appendix G).

Indicators, SN1, SN2, COMP1, PPA1, SO4 and SE1 (Table 1) were excluded from the analysis due to having relatively high modification indices in the CFA. Modification index tables in SEM suggest possible changes to the measurement model in order to improve overall fit of the data. Moreover, indicators, BI1, BI2, ATT4, PBC1 and FC3 (Table 1) were also excluded from the measurement model as a result of generating error variance estimates of less than zero (i.e. a negative error variance). This is known as a Heywood case.

Next, indicators' standardised loadings were tested for statistical significance, i.e. to test if the standardised loadings were significantly different from zero. According to Hair et al. (2010), the standardised loadings of the indicators should ideally be 0.7 or higher. Subsequently, the researcher examined the items' R^2 scores. Teo and Pok (2003), recommend that items having R^2 scores less than 0.4 should be excluded due to their low explanatory power.

In the CFA (Appendix G) all standardised loadings were greater than 0.7, with the only exception being indicator FC4 having a standardised loading of 0.66 on the facilitating conditions construct. Moreover, all indicators' R^2 scores were greater than 0.4. Indicator FC4, however was still included in the analysis as its standardised loading was only marginally smaller than the 0.7 threshold. The remaining indicators were deemed acceptable to use in the analysis.

3.6.2.1 Measurement Model (Goodness-of-fit)

Next the researcher analysed the CFA model fit indicators calculated by Amos. Model fit, commonly referred to as Goodness-of-fit (GOF), investigates how well the observed input covariance or correlation matrix predicts the estimated model (Al-Majali, 2011; Hair et al., 2010).

Table 2: CFA - Goodness of Fit Indices

GOF Index	Type	Recommended	Actual	Supported
X^2	Absolute	*p > .10*	220.9*** (125)	No†
X^2 / df	Absolute	≤ 30	1.767	Yes
GFI	Absolute	≥ .80	.924	Yes
RMSEA	Absolute	≤ .08	.055 *(.043 - .066)*	Yes
NFI	Incremental	≥ .90	.943	Yes
CFI	Incremental	≥ .90	.974	Yes
TLI	Incremental	≥ .90	.960	Yes
AGFI	Parsimony	≥ .80	.872	Yes

*Note: *** p < .01; † = result not supported, however it is normal to have significant X^2 values, when the number of observed variables ≥ 30 and sample size ≥ 250; Degrees of freedom quoted in brackets next to the X^2 statistic; Recommendations for X^2, X^2/df, NFI, CFI and TLI where obtained from (Hair et al., 2010); GFI and RMSEA from (To et al., 2008) and AGFI from (Teo & Pok, 2003). The 90% Confidence interval for RMSEA is quoted in brackets.*

GOF measures are classified into three general groups which include absolute fit measures, incremental fit measures and parsimony fit measures. Table 2 above depicts the recommended levels of the Goodness-of-fit measures described above.

Absolute fit indices: are direct measures of how well the research model reproduces the observed data (Hair et al., 2010). As such, it provides a basic assessment of how well a researcher's theory fits the sample data (Hair et al., 2010). Absolute fit indices include the chi-square ($\mathcal{X}^2$) statistic, chi-square per degree of freedom ratio ($\mathcal{X}^2$/ df), Goodness-of-Fit Index (GFI) and the Root Mean Square Error of Approximation (RMSEA).

The $\mathcal{X}^2$ test, according to Bhattacherjee (2000), compares the model $\mathcal{X}^2$ statistic to the $\mathcal{X}^2$ statistic of a comparable model with uncorrelated variables. Chi-square tests are especially sensitive to the number of observed variables and sample size (Hair et al., 2010; Teo & Pok, 2003). That is, as the number of observed variables or sample size increases, the probability of rejecting the model also increases (Bhattacherjee, 2000; Hair et al., 2010). That being said, the $\mathcal{X}^2$ value does summarise the fit of the model quite well and with experience, researchers can make educated judgements about models based on its result (Hair et al., 2010). According to Hair et al. (2010), the ratio ($\mathcal{X}^2$/ df) should be ≤ 3 for models exhibiting good fit. Moreover, the smaller the value of the ratio gets, the better the model fit will be.

GFI, according to Al-Majali (2011), measures how much of the variance and covariance the model accounts for. Possible values of GFI range from 0 to 1, with higher values indicating better fit. According to To et al. (2008), GFI values ≥ 0.8 suggest good model fit. RMSEA measures the discrepancy per degree of freedom (Teo & Pok, 2003). To et al. (2008) suggested 0.08 as a cut of point for good fit. As was the case in this analysis, the absolute fit for the CFA appeared acceptable with, $\mathcal{X}^2$ = 220.9 (*p* value = 0.000), $\mathcal{X}^2$/ df = 1.767, GFI = .924 and RMSEA = .055 (90% CI .043 - .066).

Incremental fit indices: according to Hair et al. (2010), these assess how well the estimated model fits relative to the null model, which assumes all observed variables are uncorrelated. Incremental fit indices include the Normed Fit Index (NFI), Tucker-Lewis Index (TLI) and Comparative Fit Index (CFI).

According to Teo and Pok (2003), NFI compares the existing model fit with a null model, which assumes the latent variables in the model are uncorrelated. Possible values of NFI range between 0 and 1, with higher values indicating better fit. NFI values ≥ 0.9 suggest good model fit (Hair et al., 2010). TLI is conceptually similar to NFI but varies in that it is actually a comparison of the normed χ^2 value between the null model and the proposed model (Hair et al., 2010). Typically, models with good fit have TLI values ≥ 0.9 (Hair et al., 2010). Similarly CFI is an improved version of NFI, with values ranging between 0 and 1. CFI values ≥ 0.9 suggest good model fit (Hair et al., 2010). As was the case in this analysis, incremental fit for the CFA appeared acceptable, with, NFI = .943, TLI = .960 and CFI = .974.

Parsimony Fit Indices: provide information about which model among a set of competing models is best, considering its fit relative to its complexity (Hair et al., 2010). According to Hair et al. (2010), parsimony fit is improved either by a better fit or by a simpler model. The parsimony fit indices include the Adjusted Goodness of Fit Index (AGFI). AGFI, according to Teo and Pok (2003), is adjusted for the degrees of freedom of a model relative to the number of variables and should be above 0.80. As was the case in this analysis, the parsimony fit for the CFA appeared acceptable with AGFI = .872. Accordingly, since all the GOF indicators for the CFA were within the recommended range, the researcher could then proceed to analyse the structural model.

3.6.2.2 Factors Extracted

The previous section highlighted an initial confirmatory factor analysis on the variables. The overall fit of the factor structure appeared acceptable with χ^2 = 220.9(125), X^2/df = 1.767, GFI = .924, RMSEA = .055 (90% CI .043 - .066), NFI = .943, CFI = .974, TLI = .960 and AGFI = .872. In addition all items standardised loading and R^2 scores were deemed acceptable (Appendix G). Further the reported Cronbach's Alphas for the constructs (Table 1) were greater than .65, hence the researcher took this as initial evidence of factor fit.

The following factors were extracted from the CFA: behavioural intention, attitude, subjective norms, perceived behavioural control, compatibility, relative advantage, perceived presence awareness, significant other, self-efficacy and facilitating conditions. Perceived Ease of Use was highly correlated with PBC, hence it was excluded from the analysis.

3.6.3 The Structural Model

Step 3 of the data analysis process involves fitting the structural model and observing the magnitude of the path coefficients between the latent constructs. Significantly positive or negative path coefficients or beta regression weights in the structural model suggest significant causal relationships between the latent constructs. According to Teo and Pok (2003), lower path coefficients have limited substantive effects. The structural model will be analysed in detail in chapter 4 of this report.

3.7 Limitations of the study

The main limitation is that the use of online surveys restricted the research to a pool of Internet users as respondents. Hence, the results obtained may not be generalised to non-Internet users and the general public. Further, the majority of the respondents were employed and highly educated having completed at least some tertiary education, thus the sample of respondents may have been skewed toward educated, white-collar professionals who possessed the necessary facilitating conditions and who were knowledgeable enough to appreciate the benefits of MIM. This may also restrict the generalisability of the findings. Finally, latent variable PEOU was excluded from the CFA for being highly correlated with PBC, hence the researcher was unable to determine its impact on attitude and its corresponding impact on behavioural Intention.

3.8 Validity and reliability

Hair et al. (2010) defines validity as the ability of a measure or set of measures to correctly represent the concept of study. The measure of validity is often considered under either internal or external validity. Hair et al. (2010) defined reliability as the extent to which a variable or set of variables is consistent in what it is intended to measure.

3.8.1 External validity

According to Amaratunga, Baldry, Sarshar, and Newton (2002), external validity refers to the extent to which any research findings can be generalised beyond the immediate research sample or setting in which the research took place, such that the findings drawn from studying one group are applicable to other groups or settings. This research was carried out in South Africa, hence the outcomes are expected to be relevant in the South African context only and may or may not be applicable to settings in other countries, thus external validity may not be guaranteed. However since South Africa is a major economic region in sub Saharan Africa, it has become home to many foreigners from neighbouring

countries (e.g. Lesotho, Mozambique, Zimbabwe, Namibia, etc.) who have relocated in search of better employment opportunities. In such cases these foreigners are influenced by our mobile communication technology (i.e. mobile devices and services) and may transfer our communication trends back to their home country. Moreover, the growing penetration of smartphones (Figure 3) and mobile broadband in Africa (Figure 1), have enabled consumers' to access more affordable, feature rich IP communication services. As a result their communication preferences are very likely to converge. Therefore, it may be argued that the results of this study may also extend to neighbouring countries of South Africa as well.

3.8.2 Internal validity

According to Amaratunga et al. (2002), internal validity refers to whether or not what are identified as the causes actually produce what has been interpreted as the "effect" or "responses" and checks whether the right cause-and-effect relationships have been established. Content validity and construct validity are often used to measure internal validity (To et al., 2008). Content validity, according to Hair et al. (2010), assesses the degree of correspondence between the selected items to constitute a summated scale and its conceptual definition. In this study, all questionnaire items (Table 1) were adopted from instruments developed in previous studies, hence content validity was most likely achieved.

Construct validity could be examined through investigating convergent validity and discriminant validity (To et al., 2008). Convergent validity, according to Hair et al. (2010), is defined as the extent to which indicators of a specific construct converge or share a high proportion of variance in common. It can be assessed by examining the Average Variance Extracted (AVE) of the latent constructs and should ideally account for more than 50% of the variance extracted (Fornell & Larcker, 1981; Ho & Ko, 2008). Table 3 below gives the AVE measurements. All AVE scores are greater than 0.5, thus convergent validity is well supported.

Table 3: Average Variance Extracted for Latent Constructs

Constructs	Code	Avg. Variance Extracted
Behavioural Intention	BI	.59
Attitude	ATT	.70
Subjective Norms	SN	.76
Perceived Behavioural Control	PBC	.71
Compatibility	COMP	.76
Relative Advantage	RA	.77
Perceived Presence Awareness	PPA	.67
Significant Others	SO	.65
Self-Efficacy	SE	.78
Facilitating Conditions	FC	.52

According to Hair et al. (2010), discriminant validity is defined as the extent to which latent constructs are truly distinct from one another. It can be tested by examining whether the AVE values of the individual latent constructs are greater than the squared correlation between constructs and all other constructs (Hair et al., 2010; Ho & Ko, 2008), that is, discriminant validity exists if items share more common variances with their respective constructs than with other constructs (Ho & Ko, 2008). Appendix F shows the squared inter-item correlation matrix. The AVE values of the individual constructs are greater than the squared correlation between constructs and all other constructs – with the exceptions being attitude's squared correlation with behavioural intention (i.e. $Att^2 \rightarrow BI^2$, $r^2 = 0.78$) and facilitating conditions squared correlation with perceived behavioural control (i.e. $FC^2 \rightarrow PBC^2$, $r^2 = 0.64$). This was deemed acceptable given the construct's causal relationship in the research model (Figure 8). That is, attitude is a predictor of behavioural intention and facilitating conditions predict perceived behavioural control – no cross loadings were evident. Additionally, all three constructs (i.e. behavioural intention, attitude, and perceived behavioural control) were successfully extracted from the CFA. The researcher therefore took this as evidence of discriminant validity being achieved.

3.8.3 Reliability

Data reliability was assessed using Cronbach's Alpha (α), which is a measure of internal consistency. According to Ho and Ko (2008) and Chau and Lai (2003), a Cronbach's α of at least 0.5 for each construct is considered to be adequately reliable. The results of reliability (Table 1) showed all 10 constructs to have a satisfactory Cronbach's α, ranging from 0.61 to 0.86, indicating acceptable levels of internal consistency.

CHAPTER 4: PRESENTATION OF RESULTS

4.1 Introduction

This chapter presents the results of the quantitative analysis. The results presented are in accordance with the research design and methodology chapters discussed previously. The results include describing the demographic profile of respondents, analysing descriptive statistics of the variables and then diagnosing the GOF estimates for the structural model (i.e. research model). Finally, the regression weights of the structural model are examined and the findings for each hypothesis presented.

4.2 Demographic profile of respondents

A total of 281 completed survey responses were downloaded from the Survey Monkey internet website, of which 22 respondents did not use MIM previously. The remaining 259 respondents had used MIM previously and were willing to complete the survey up until the end. Table 4 below gives a summary of the respondents' demographic profile. The first column displays a list of categories used to describe the sample of respondents. Columns 2 and 3 represent the frequency count and percentages scores of each item respectively.

The survey respondents consisted of more males (61%) than females (39%). Of the 259 participants, 20.1% were black, 4.2% Coloured, 40.2% Indian and 34% white. Most respondents were employed (96.4%), between the ages of 20 to 35 (71%) and had completed at least some tertiary education (86%). In addition, the majority of the respondents owned cell phone contracts (74.5%), followed by Prepaid (15.1%) and then Top Up plans (10.4%). The most commonly used MIM applications included Whatsapp (84.6%), followed by Blackberry Messenger (55.2%) and then Facebook Messenger (44%). Moreover, MIM is used mainly for personal use, with the popular services being chatting, sharing of pictures and video clips.

Table 4: Profile of respondents

Demographic	Frequency (n = 259)	%
Gender		
Male	159	61.0
Female	100	39.0
Race		
Black	52	20.1
Coloured	11	4.2
Indian	104	40.2
White	88	34.0
Other	4	1.5
Age		
< 20	3	1.2
20-25	34	13.1
26-30	75	29.0
31-35	74	28.6
36-40	37	14.3
41-45	18	6.9
46-50	7	2.7
≥ 50	11	4.2
Education		
Primary	0	0.0
High	37	14.3
Diploma	68	26.3
Degree	109	42.1
Master	43	16.6
Doctorate (PHD)	2	0.8
Profession		
Student	7	2.7
Employed	250	96.5
Unemployed	0	0.0
Home-maker	1	0.4
Retiree	1	0.4
Mobile Plan		
Prepaid	39	15.1
Contract	193	74.5
Top Up	27	10.4

Table 4: Profile of respondents Continued.

MIM Applications		
Whatsapp	219	84.6
Fring	1	0.4
Viber	33	12.7
Mxit	26	10.0
BBM	143	55.2
Facebook Messenger	114	44.0
Skype Messenger	66	25.5
Other	20	7.7
Usage		
Mainly for personal use	178	68.7
Half personal, half business	80	30.9
Mainly for business	1	0.4
MIM Services		
Chat / Group Chat	247	95.4
Pictures & videos	199	76.8
Presence	60	23.2
Location	36	13.9
File Sharing	64	24.7

4.3 Descriptive Statistics

Prior to analysing the variables with structured equation modelling in AMOS, it is common practice to examine the descriptive statistics of the sample data in order to gain a better understanding of the variables to be processed. Indicator variables loading on the same factor or construct were averaged in order to calculate a single score representative of the construct. These scores were then used to determine the means, standard deviations, reliabilities (I.e. Cronbach's alpha), and correlations among the variables depicted in Table 5 below. Table 5 gives the names of all research constructs utilised in the model, together with its corresponding mean (M) and standard deviation (SD) scores. Columns labelled 1 to 10 represent the correlation matrix for all 10 constructs. The reliability scores (i.e. Cronbach's alpha) of the constructs are shown in parenthesis along the diagonal of the correlation matrix.

The mean scores depicted in Table 5 are largely positive and range from 0.84 to 2.42, with mean scores closer to +3 indicating that on average, respondents are in support of the research construct under investigation, while scores closer to 0 may suggest uncertainty. No negative mean score was observed. Relatively high scores were noted for behavioural intention (2.25), attitude (2.27), perceived behavioural control (2.42), self-efficacy (1.92) and facilitating conditions (2.19). Moderate to low mean scores were noted for compatibility (1.84), relative advantage (1.58), subjective norms (1.37), perceived presence awareness (0.97) and significant others (0.84). Moreover, the standard deviations of all variables ranged from 0.85 to 1.49, indicating an acceptable variability within the dataset.

Table 5: Means, standard deviation and correlations (*N* = 259)

Construct	*M*	*SD*	1	2	3	4	5	6	7	8	9	10
1. Behavioural Intention	2.25	0.86	(.85)									
2. Attitude	2.27	0.85	.88**	(.90)								
3. Subjective Norms	1.37	1.28	.53**	.58**	(.86)							
4. Behavioural Control	2.42	0.71	.77**	.73**	.47**	(.86)						
5. Compatibility	1.84	1.09	.75**	.79**	.55**	.65**	(.89)					
6. Relative Advantage	1.58	1.23	.66**	.72**	.64**	.57**	.78**	(.87)				
7. Presence Awareness	0.97	1.49	.40**	.43**	.56**	.24**	.53**	.59**	(.85)			
8. Significant Others	0.84	1.33	.33**	.36**	.69**	.29**	.43**	.47**	.57**	(.78)		
9. Self-Efficacy	1.92	0.86	.63**	.58**	.50**	.75**	.66**	.60**	.40**	.43**	(.65)	
10. Facilitating Conditions	2.19	0.76	.67**	.63**	.40**	.80**	.65**	.57**	.28**	.30**	.72**	(.69)

*Note: Reliabilities are shown along the diagonal in parentheses; ** = Correlation is significant at the 0.01.*
M = Mean, SD = Standard Deviation and Behavioural Control = Perceived behavioural Control.

On inspection of the correlation matrix it is evident that attitude, perceived behavioural control, compatibility, relative advantage, self-efficacy and facilitating conditions have moderate to strong correlations with behavioural intention, having alphas of 0.88, 0.77, 0.75, 0.66, 0.63 and 0.67 respectively. This makes sense, considering their respective causal relationships depicted in the research model (Figure 8). Conversely, subjective norms, perceived presence awareness and significant others have low correlations with behavioural intention, having alphas of 0.53, 0.40 and 0.33 respectively. This could indicate that subjective norms, perceived presence awareness and significant others may not have a significant effect on behavioural intention.

Accordingly, attitude and perceived behavioural control are positively correlated with behavioural intention. Similarly, Compatibility is positively correlated with Attitude, (α = .79). Self-efficacy and facilitating conditions are both positively correlated with Perceived behavioural control, having alpha's of .75 and .80 respectively. The Cronbach's alpha shown in parentheses along the diagonal in Table 5 above, are all greater than the threshold of 0.5 indicating internal consistency among the indicator variables for that construct.

4.4 Structural Model (Goodness-of-Fit)

Next the researcher performed a SEM analysis on the structural model (or research model) (Appendix H) using the factors extracted from the CFA. A GOF analysis was carried out on the structural model to assess whether the relationships among the research constructs fit the data moderately well. Table 6 below gives the absolute, incremental and parsimonious GOF statistics for the structural model.

Table 6: Structural Model (Goodness-of-fit)

GOF Index	Recommended value	Actual Value	Supported
$\mathcal{X}^2$ (chi-square)	*P > .1*	278.4*** (146)	No†
$\mathcal{X}^2$/ df	≤ 3	1.907	Yes
GFI	≥ .8	.907	Yes
RMSEA	≤ .08	.059 (.049 - .070)	Yes
NFI	≥ .9	.928	Yes
CFI	≥ .9	.964	Yes
TLI	≥ .9	.953	Yes
AGFI	≥ .8	.866	Yes

*Note: : *** p < .01; † = result not supported, however it is normal to have significant X^2 values, when the number of observed variables ≥ 30 and sample size ≥ 250; Degrees of freedom are shown in parentheses next to the chi-square statistic; The 90% Confidence interval for RMSEA is quoted in brackets next to the RMSEA point value. Recommendations for X^2, X^2/df, NFI, CFI and TLI where obtained from (Hair et al., 2010), GFI and RMSEA from (To et al., 2008), and AGFI for (Teo & Pok, 2003).*

As noted in Table 6, the $\mathcal{X}^2$ value was 278.4 with 146 degrees of freedom (p < .01). The chi-square value reported was statistically significant, so the exact-fit hypothesis was rejected. However, according to Hair et al. (2010), significant *p* values are expected, especially when the number of observed variables are greater than 30 and / or the sample size is greater than 250. The ratio $\mathcal{X}^2$/ df = 1.907, GFI = .907 and RMESA = .059 having a 90% confidence interval ranging from .049 to .070. All absolute fit indices were

within the recommended range, suggesting good absolute fit. Similarly, NFI, CFI and TLI were also within the recommended range, having values of .928, .964 and .953 respectively, suggesting good incremental fit. Further, Parsimony fit index, AGFI was also supported having a value of .866. In summary, all GOF diagnostics were within the recommended range, hence the hypothesised model provides a good overall fit of the data. Subsequently, the estimated structural coefficients were examined to evaluate the individual hypotheses.

4.5 Structural Model Analysis

The results of the structural model analysis are shown in Figure 9 below. The structural model (i.e. research model) comprises of six exogenous factors (i.e. relative advantage, compatibility, perceived presence awareness, significant others, self-efficacy and facilitating conditions) and four endogenous factors (i.e. behavioural intention, attitude, subjective norms and perceived behavioural control), all of which are represented by oval shapes in the path diagram. Exogenous variable, perceived ease of use was omitted from the structural model as a result of it being excluded from the CFA.

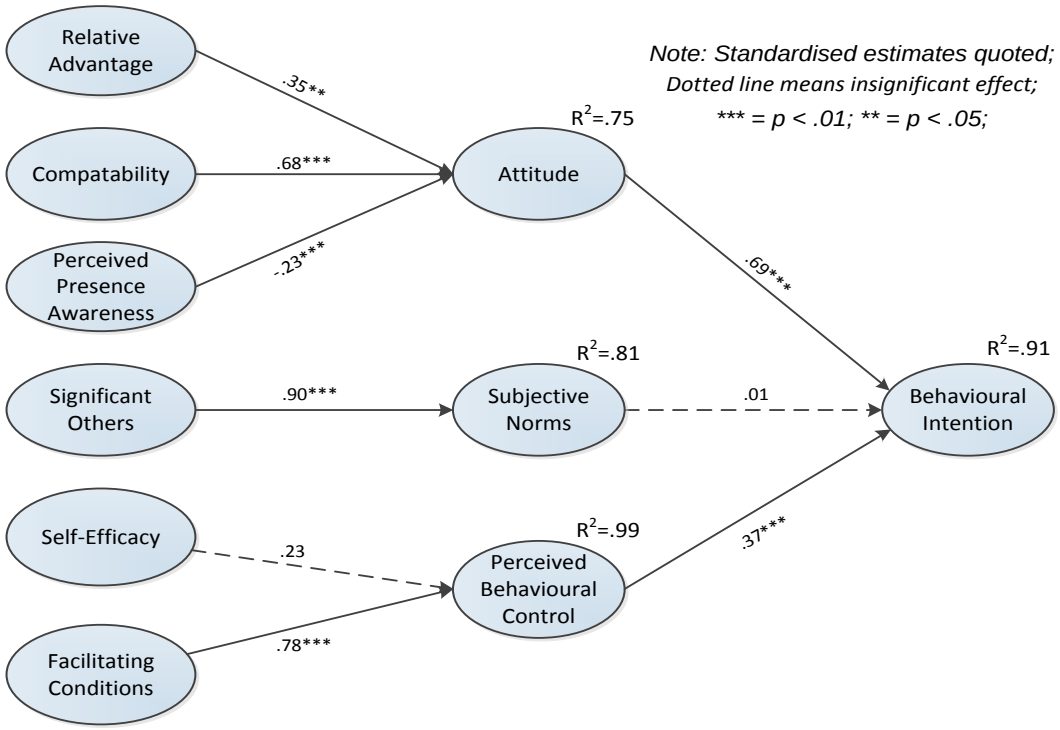

Figure 9: Structural Model Analysis

Each path in the structural model represents a hypothesis to be proved in this study. Quoted alongside each path is the standardised regression estimates (β) and its corresponding level of significance. Figure 9 also shows the explained variance (i.e. R^2) for each of the endogenous variables in the model. Accordingly, the results of the structural model analysis show that all research hypotheses were supported except for H2, H7 and H9. No significant impact of subjective norms on behavioural intention and self-efficacy on perceived behavioural control were found. Contrary to H7, a significant negative impact of perceived presence awareness on attitude was found. Moreover, approximately 91% of the variance in behavioural intention was explained by the research model.

4.6 Decomposition of effects

Table 7 below illustrates the decomposed association between latent constructs, showing the magnitude and significance of the causal relationships in the model (i.e. direct, indirect and total effects). Direct causal effects are effects that go directly from one variable to another, whereas indirect causal effects occur when the relationship between two variables is mediated by one or more variables (Lleras, 2005). Total effects are calculated by adding the magnitudes of the direct and indirect causal effects. Notice that the columns in Table 7 represent the four endogenous variables (i.e. behavioural intention, attitude, subjective norms and perceived behavioural control), while the rows represent the list of latent constructs utilised in this study.

Table 7 shows that attitude, perceived behavioural control, relative advantage, compatibility and facilitating conditions have moderate to high total effects on behavioural intention, with ($\beta = .69$, $p < .01$), ($\beta = .37$, $p < .01$), ($\beta = .24$, $p < .05$), ($\beta = .47$, $p < .01$) and ($\beta = .29$, $p < .01$) respectively. The total effect of perceived presence awareness on behavioural intention was slightly negative ($\beta = -.16$, $p < .01$), indicating a significant negative association between both constructs. Subjective norms, significant others and self-efficacy have insignificant total effects on behavioural intention.

Table 7: Decomposition of effects

	Endogenous Variables											
	Behavioural Intention			Attitude			Subjective Norms			Behavioural Control		
	B	**β**	***S.E.***	**B**	**β**	***S.E.***	**B**	**β**	***S.E.***	**B**	**β**	***S.E.***
Attitude												
Direct	.84***	.69***	.10	-	-	-	-	-	-	-	-	-
Indirect	-	-	-	-	-	-	-	-	-	-	-	-
Total	.84***	.69***	.10	-	-	-	-	-	-	-	-	-
Subjective Norms												
Direct	.00	.01	.03	-	-	-	-	-	-	-	-	-
Indirect	-	-	-	-	-	-	-	-	-	-	-	-
Total	.00	.01	.03	-	-	-	-	-	-	-	-	-
Behavioural Control												
Direct	.51***	.37***	.09	-	-	-	-	-	-	-	-	-
Indirect	-	-	-	-	-	-	-	-	-	-	-	-
Total	.51***	.37***	.09	-	-	-	-	-	-	-	-	-
Relative Advantage												
Direct	-	-	-	.23**	.35**	.10	-	-	-	-	-	-
Indirect	.19**	.24**	.09	-	-	-	-	-	-	-	-	-
Total	.19**	.24**	.09	.23**	.35**	.10	-	-	-	-	-	-
Compatibility												
Direct	-	-	-	.42***	.68***	.11	-	-	-	-	-	-
Indirect	.36***	.47***	.01	-	-	-	-	-	-	-	-	-
Total	.36***	.47***	.01	.42***	.68***	.11	-	-	-	-	-	-

Table 7: Decomposition of effects cont.

	Endogenous Variables											
	Behavioural Intention			**Attitude**			**Subjective Norms**			**Behavioural Control**		
	B	**β**	***SE***	**B**	**β**	***SE***	**B**	**β**	***SE***	**B**	**β**	***SE***
Presence Awareness												
Direct	-	-	-	-.12***	-.23***	.04	-	-	-	-	-	-
Indirect	-.10***	-.16***	.03	-	-	-	-	-	-	-	-	-
Total	-.10***	-.16***	.03	-.12***	-.23***	.04	-	-	-	-	-	-
Significant Others												
Direct	-	-	-	-	-	-	.96***	.90***	.08	-	-	-
Indirect	.00	.01	.03	-	-	-	-	-	-	-	-	-
Total	.00	.01	.03	-	-	-	.96***	.90***	.08	-	-	-
Self Efficacy												
Direct	-	-	-	-	-	-	-	-	-	.18	.23	.16
Indirect	.09	.08	.08	-	-	-	-	-	-	-	-	-
Total	.09	.08	.08	-	-	-	-	-	-	.18	.23	.16
Facilitating Conditions												
Direct	-	-	-	-	-	-	-	-	-	.92***	.78***	.26
Indirect	.47***	.29***	.16	-	-	-	-	-	-	-	-	-
Total	.47***	.29***	.16	-	-	-	-	-	-	.92***	.78***	.26
R^2		**.91**			**.75**			**.81**			**.99**	

*Note: *** p < .01; ** p < .05; * p < . 1; Behavioural Control = Perceived Behavioural Control;* **B** *= unstandardised regression weight;* **β** *= standardised regression weight*

Relative advantage and compatibility have moderate to high total effects on Attitude, with (β=.35, $p < .05$) and (β=.68, $p < .01$) respectively, while perceived presence awareness was negatively associated with attitude, (β = -.23, $p < .01$). Significant others was largely associated with subjective norms, with (β=.90, $p < .01$), and facilitating conditions was largely associated with perceived behavioural control, (β=.78, $p < .01$). Self-efficacy had no significant impact on perceived behavioural control.

Table 7 also gives the explained variance (i.e. R^2) for each of the endogenous constructs in the model. Attitude, subjective norm, and perceived behavioural control collectively explained 91% of the variance in behavioural intention to adopt MIM for communication, whereas relative advantage, compatibility and perceived presence awareness collectively explained 75% of the variance in attitude. Significant others managed to explain 81% of subjective norms, while self-efficacy, together with facilitating conditions, explained 99% of the variance in perceived behavioural control.

4.7 Summary of hypothesis results

According to the goodness-of-fit assessment carried out in section 4.2, the structural model provided a good overall fit of the data. Moreover, the reliability and validity analysis discussed in section 3.8 shows that the latent constructs investigated correctly represent the concepts of this study. Hence the structural model (Figure 9) was deemed adequate for testing the hypothesised relationships in this study. Table 8 below gives a summary of the hypotheses results.

Table 8: Hypotheses Results

H	Exogenous	→	Endogenous (R^2)	Estimate	Supported
H1	ATT	→	BI (.91)	.69***	Yes
H2	SN	→	BI	.01	No
H3	PBC	→	BI	.37***	Yes
H4	RA	→	ATT (.75)	.35**	Yes
H5	PEOU	→	ATT	-	-
H6	COMP	→	ATT	.68***	Yes
H7	PPA	→	ATT	-.23***	No
H8	SO	→	SN (.81)	.90***	Yes
H9	SE	→	PBC (.99)	.23	No
H10	FC	→	PBC	.78***	Yes

*Note: Standardised estimates quoted; *** = p < .01; ** = p < .05;*

As noted in Table 8, positive β coefficients that are statistically significant are illustrated as supported hypotheses in this study. Out of the 10 hypotheses proposed in the literature review, six were supported, three were unsupported and one was not tested. The results show that attitude and perceived behavioural control has a significant and positive influence on behavioural intention, thus supporting both H1 and H3 hypotheses respectively. Subjective norms had an insignificant effect on behavioural intention, hence H2 was unsupported. Relative advantage and compatibility had significant and positive influence on attitude, thus supporting both H4 and H6 hypotheses respectively. Perceived ease of use was excluded from the analysis, hence the hypotheses was not tested. Contrary to H7, perceived presence awareness had a significant negative influence on attitude, hence H7 was unsupported.

Significant others had a significant and positive effect on subjective norms, so H8 was supported. Further, facilitating conditions had a significant positive effect on perceived behavioural control, so H10 was supported. Self-efficacy had an insignificant effect on perceived behavioural control, hence H9 was unsupported. In addition, Table 8 also gives the R^2 value in parenthesis next to each endogenous construct. Accordingly, the explained variance of behavioural intention is 91%, whereas attitude explained 75%, subjective norms 81%, and perceived behavioural control 99%.

CHAPTER 5: DISCUSSION OF THE RESULTS

5.1 Introduction

The purpose of this study is to gain insight into MIM adoption amongst cellphone users in South Africa. It attempts to identify the factors and the extent to which they influence consumers' behavioural intention to adopt MIM for communication. The findings are expected to give MNOs an insight into how subscribers come to accept and adopt MIM applications such as Whatsapp, Mxit, and Viber as the means of communication in South Africa.

The research framework employed in this study (Figure 8) is based on the DTPB (Ke & Li, 2009) and proposes a total of 10 decomposed factors that influence MIM adoption (i.e. attitude, subjective norms, perceived behavioural control, relative advantage, perceived ease of use, compatibility, perceived presence awareness, significant others, self-efficacy and facilitating conditions). According to the results presented in chapter 4, only seven of these factors were statistically retained (Table 8).

SEM results confirmed that each of the three endogenous factors, namely attitude, subjective norms and perceived behavioural control, explain a significant portion of the variance (i.e. R^2 = 91%) in behavioural intention. This is a remarkable result and suggests that the DTPB is a useful framework for explaining much of the variance (i.e. 91%) of subscribers' intention to adopt MIM for communication. Based on the results presented in Table 8, the research hypotheses findings are discussed in detail below.

5.2 Demographic profile of respondents

A total of 281 valid survey responses were collected, of which 22 respondents did not use MIM previously. Thus approximately 8% of the total number of respondents did not use MIM previously. Further investigation revealed that mostly males between ages of 36 and 50 did not prefer using MIM for communication. The inferences relating to a consumers age is of particular importance and consistent with the findings by To et al. (2008) and Ke and Li (2009), that most IM users are young, between the ages of 21 and 30 years old. Figure 10 below shows the percentage distribution of the sample data

versus the target population by racial groups and gender. The sample of respondents consisted of more males (61%), than females (39%), of which 20.1% were black, 4.2% Coloured, 40.2% Indian and 34% white.

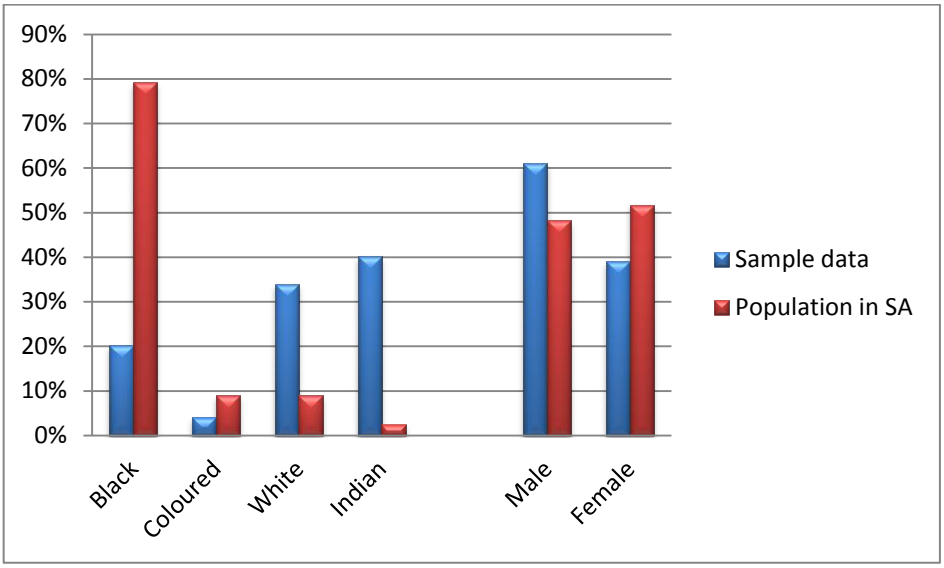

Figure 10: Percentage distribution of sample data vs. target population by racial groups and gender

This, according to Statistics South Africa (2011), is not an accurate representation of the target population in South Africa. The 2011 census results confirm that the population in South Africa is comprised of 48.2% males and 51.7% females, of which 79.2% are black, 8.9% white, 8.9% Coloured and 2.5% Indian. The differences in racial distribution between the sample and target population will not have a significant impact on the results, especially since all respondents came from various backgrounds, had diverse cultures, worked in different sectors of the economy and had various communication preferences and exposure to MIM. Thus the racial distribution of the sample is expected to have a reasonable averaging effect on the results of this study.

Further, most respondents were employed (96.4%), between the ages of 20 to 35 (71%) and had completed at least some tertiary education (86%). According to Statistics South Africa (2011), the labour absorption rate in South Africa (i.e. employed persons as a percentage of the working age population, 15 to 64) amounts to approximately 40%. In addition, approximately 12% of the population aged 20 years and older have completed some tertiary education (Statistics South Africa, 2011). Consequently, this represents

contrasting demographic profiles between the sample and target population, thus implying that the results of this study may be skewed toward young, educated, white-collar professionals.

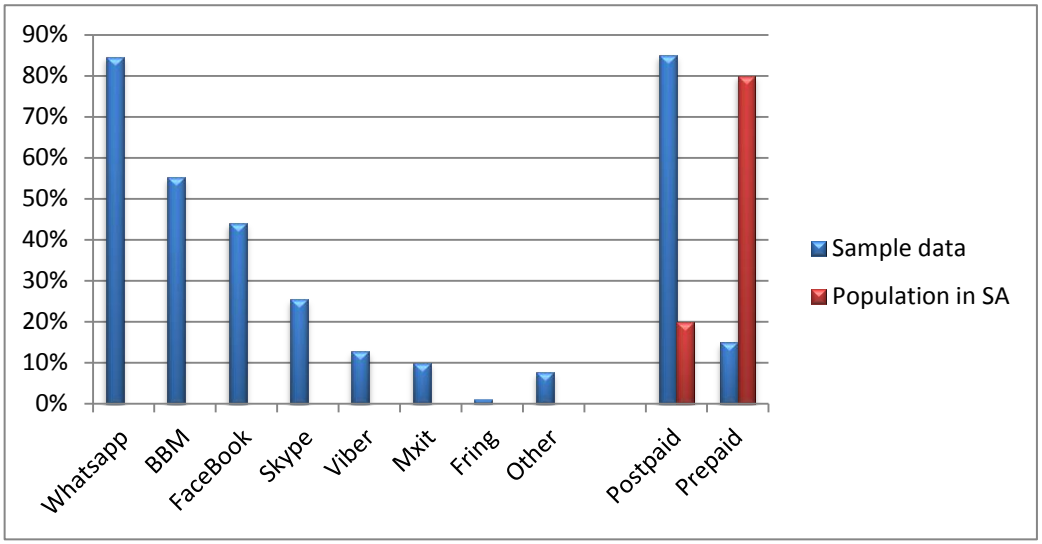

Figure 11: Percentage distribution of MIM applications, including postpaid and prepaid subscriptions

Figure 11 above shows the percentage distribution of popular MIM applications adopted by the survey respondents. It also shows the distribution of postpaid and prepaid consumers in the sample data versus the target population in South Africa. As noted in Figure 11, majority of the respondents owned postpaid and Top-Up cellphone contracts (84.9%), followed by prepaid accounts (15.1%). The most commonly used MIM applications among respondents included Whatsapp (84.6%), followed by Blackberry Messenger (55.2%) and then Facebook Messenger (44%). Moreover, MIM is used mainly for personal use, with the popular services being chatting, sharing of pictures and video clips (Table 4).

Research by Business Monitor International (2011), showed that mobile subscriptions in South Africa comprise of approximately 20% postpaid and 80% prepaid subscriptions. Likewise, according to Muller (2012), the popular MIM applications utilised in South Africa are BBM, Mxit and Whatsapp. Hence the demographic profile of respondents have a higher proportion of postpaid consumers (i.e. 84.9%) as opposed to the target population in South Africa which is approximately 80% prepaid. This may imply that the

results of this study may be skewed toward postpaid users. However, since both postpaid and prepaid subscribers use the same MIM applications for communication, they share similar communication styles and preferences. Therefore, the results of this study may also be generalisable to prepaid subscribers as well.

5.3 Discussion - Hypothesis 1

Research hypothesis 1 (H1) of this study proposed that attitudes of users towards MIM positively influences their behavioural intention to adopt MIM for communication. Findings for H1 ($\beta = .69$, $p < .01$) confirmed that attitude was the only determinant with the most significant positive effect on behavioural intention (Table 7), hence this study confirmed research hypothesis 1. H1 is consistent with the DTPB as well as the findings of previous adoption studies, including Ke and Li (2009), To et al. (2008) and Teo and Pok (2003). Attitude towards a behaviour is determined by a person's salient beliefs about the consequences of that behaviour and the evaluation of the desirability of the consequences (Teo & Pok, 2003). Thus the results suggest that in South Africa, most subscribers recognise the benefits of using MIM and possess a positive attitude toward its adoption for mobile communication. The determinants of attitude according to the research model (Figure 8), include relative advantage, compatibility, perceived presence awareness and PEOU.

Relative advantage and compatibility according to the hypotheses results (Table 8) were found to have significant positive effects on subscribers' attitudes towards MIM communication. The finding is consistent with the DTPB as well as previous adoption studies, including Ke and Li (2009), Teo and Pok (2003) and Taylor and Todd (1995). Moreover, in accordance with the Innovation Diffusion Theory by Rogers (1995), the greater the compatibility and relative advantage of an innovation, the faster it's rate of adoption. This suggests that the diffusion of MIM communication in South Africa is expected to accelerate.

A likely explanation is that consumers' view MIM as being a more superior technology when compared to SMS and MMS communication. Aside from the obvious cost benefit associated with using MIM, consumers are able to share multi-media messages, text based messages, audio, video, pictures, emoticons and files in real-time. MIM is tailored

toward delivering a more personalised communication experience, such that consumers are able to manually update their statuses to include personal information about their moods, photos / avatars, favourite song, personal web address, etc. Additionally, consumers view MIM as being more of a lifestyle product as opposed to a technological innovation. Supported by the increasing capabilities of smartphones, consumers are now comfortable enough to take pictures, record music and videos on the fly and forward them to friends, family and colleagues almost instantly.

Contrary to the DTPB by Ke and Li (2009), PPA was found to have a significant negative effect on attitude (Table 8), while PEOU was excluded from this study. Further, the decomposition of effects (Table 7) confirmed that relative advantage, compatibility and perceived presence awareness explain 75% of the variance in Attitude (i.e. $R^2 = .75$). This is a significant proportion of the variance explained and confirms that the determinants of attitude (i.e. relative advantage, compatibility and perceived presence awareness) have a significant effect on consumers' attitudes toward MIM communication.

5.4 Discussion - Hypothesis 2

Research hypothesis 2 (H2) of this study proposed that subjective norms of users' are positively associated with behavioural intention to adopt MIM for communication. Findings for H2 ($\beta = .01$, $p > .10$) confirmed that subjective norms had no significant effect on behavioural intention (Table 8), hence this study failed to confirm research hypothesis 2. H2 is contrary to the DTPB as well as the findings reported in previous adoption studies including Ke and Li (2009), To et al. (2008), Teo and Pok (2003) and Taylor and Todd (1995). According to DTPB by Ke and Li (2009), people's intention to perform a particular behaviour is a function of their perception that important others think they ought to do so. Accordingly, the results suggest that in South Africa, social pressure from important others is found to have an insignificant effect on the adoption of MIM for communication. A possible explanation could be that in South Africa, IM first started off as PC to PC based communication, since users needed a dedicated connection to the internet and had to be logged on to the IM application in order to use the service. However, as mobile technology advanced and smartphones were introduced in South

Africa, IM communication spread from PC's to mobile phones and at such time users were already familiar with the technology and were not as reliant on referent groups to encourage its use. This makes sense, given that the majority of the respondents fit the profile of young to middle aged white-collar professionals (i.e. employed (96.5%), having a diploma or degree (86%), having access to PCs' with valid email addresses (100%) and between the ages of 20 and 40 (85%)). Moreover, since smartphones were only introduced recently to South Africa (i.e. five to seven years ago), the age category of the respondents further confirmed that they had experienced the transition of IM from PCs to mobile devices, thus supporting the argument above.

Alternatively, the rejection of subjective norms could mean that despite influences of referent groups, respondents may perceive the adoption of MIM to be a trivial matter which they can choose to adopt by themselves at their own leisure. That being said, the sample population discussed above is not an accurate reflection of the target population in South Africa, therefore it may be possible that subjective norms could in fact have a positive effect on behavioural intention. Further, the decomposition of effects (Table 7) confirmed that significant others explains 81% of the variance in subjective norms (i.e. R^2 = 0.81). This is a significant proportion of the variance explained and confirms that referents groups such as friends, family and colleagues have a significant effect on subjective norms.

5.5 Discussion - Hypothesis 3

Research hypothesis 3 (H3) of this study proposed that a subscriber's perception of control over MIM is positively associated with their behavioural intention to adopt MIM for communication. Findings for H3 ($\beta = .37$, $p < .01$) suggest that perceived behavioural control has a significant positive influence on behavioural intention, hence this study confirmed research hypothesis 3. H3 is consistent with the DTPB as well as the findings of previous adoption studies, including Ke and Li (2009), To et al. (2008) and Teo and Pok (2003). PBC, according to Ke and Li (2009) and Taylor and Todd (1995), refers to an individual's perception of whether a behavioural act is within their control. Moreover, according to the DTPB, PBC is an important determinant of intention and use of technology (Taylor & Todd, 1995). Thus the results suggest that in South Africa, a

subscriber's perception of control over using MIM has a significant positive effect on their behavioural intention to adopt MIM for communication. Moreover, mobile subscribers in South Africa perceive they have the knowledge, ability and resources (i.e. time, money and smartphones) to make use of MIM for communication. This makes sense considering that most respondents were previously exposed to PC-based IM communication which is almost identical to MIM - the only difference is that MIM has the added benefit of mobility. MIM is a cheaper substitute for SMS and MMS communication, thus consumers do not need to set aside additional time and money to use the technology. In addition, MNOs are aggressively embarking on initiatives to flood the South African market with smartphone devices at affordable prices.

The decomposition of effects (Table 7) confirm that self-efficacy and facilitating conditions explain 99% of the variance in perceived behavioural control (i.e. R^2 = .99). However, since self-efficacy was found to have an insignificant effect on PBC, the majority of the variance in PBC is explained by facilitating conditions. This is also evident by the high correlation coefficient between facilitating conditions and perceived behavioural control (i.e. r = 0.80) in the correlation matrix (Table 5).

5.6 Discussion - Hypothesis 4

Research hypothesis 4 (H4) of this study proposed that relative advantage is positively associated with consumers attitudes toward MIM communication. Findings for H4 (β = .35, $p < .05$) suggest that relative advantage has a significant positive influence on a subscriber's attitudes toward MIM communication (Table 8), therefore this study confirmed research hypothesis 4. As was expected, H4 is consistent with the DTPB as well as the findings of previous adoption studies including Ke and Li (2009), Shih and Fang (2004) and Teo and Pok (2003). Relative advantage, according Teo and Pok (2003), refers to the degree to which adopting a new technology is perceived as being better than the practice it supersedes. Moreover, in accordance with the Innovation Diffusion Theory by Rogers (1995), the greater the relative advantage of an innovation, the faster it's rate of adoption. Accordingly, the results suggest that in South Africa, mobile subscribers view MIM as having more advantages over SMS / MMS communication, and consequently have a positive influence on their attitudes toward

MIM adoption. This makes sense considering that MIM is far cheaper and more feature rich in comparison with legacy messaging technologies such as SMS and MMS. With MIM, consumers are able to share multi-media messages, text messages, audio, video, pictures, emoticons and files in real-time. Further, MIM is tailored toward delivering a more personalised communication experience, such that consumers are able to manually update their statuses to include personal information about their moods, photos / avatars, favourite song, personal web address, etc. Unique to MIM is its near synchronous information exchange and almost immediate confirmation of whether messages were delivered and successfully read by the intended recipient.

MIM's synchronicity feature allows subscribers to communicate in real-time, similar to that of voice calls. Thus MIM has the propensity to reduce the frequency of voice calls as well. Moreover, according to the demographic profile of respondents above, MIM's most popular services include chatting / group chat (95%), followed by picture and video clip sharing (77%), file sharing (25%), presence information (23%) and then location information (14%). Hence for these reasons it may be inferred that the relative advantage of MIM positively influences a subscriber's attitude toward MIM adoption.

5.7 Discussion - Hypothesis 5

Research hypothesis 5 (H5) proposed that perceived ease of use is positively associated with consumers' attitudes toward MIM communication. H5 was not tested in this study as a result of PEOU being removed from the CFA for being highly correlated with perceived behavioural control. One could have argued that PBC should have been removed instead, however this option would have resulted in losing three latent factors (i.e. PBC, SE and FC) as opposed to just PEOU. Also, by retaining PBC, the researcher still manages to preserve the structural relationship within the model. PEOU, according to Gefen et al. (2003), gives an indication of the cognitive effort needed to learn and to utilise the new technology. Further, the effect of PEOU has been found to have a positive impact on attitude (Davis, 1989; Taylor & Todd, 1995). According to the Innovation Diffusion Theory by Rogers (1995), the greater the PEOU of an innovation, the faster it's rate of adoption. In South Africa, popular MIM services include BBM, Whatsapp and Mxit (Muller, 2012). According to Clark-Dickson and Talmesio (2012), Mxit has 10 Million

active users in South Africa alone. This amounts to approximately 20% of the population in the country and serves as confirmation that the diffusion process of MIM is highly successful in South Africa. Thus, by reverse engineering the Innovation Diffusion Theory, since MIM has a high rate of adoption in South Africa, this could imply that MIM is likely to be perceived as easy to use. In addition, the CFA suggests that in South Africa, both PEOU and PBC latent factors are similar and measure the same concept. This is contrary to the DTPB and may warrant further investigation. By the same token, it could also indicate that the DTPB may not be a suitable framework to test MIM adoption in South African. Faziharudean and Li-Ly (2011) discussed a simpler alternative framework which relates all exogenous factors (i.e. RA, PEOU, COMP, PPA, SO, SE and FC) directly to behavioural intention, that is, by removing ATT, SN and PBC altogether, and connecting the paths from all exogenous variables directly to behavioural intention.

5.8 Discussion - Hypothesis 6

Research hypothesis 6 (H6) proposed that compatibility is positively associated with consumers attitudes toward MIM communication. Findings for H6 ($\beta = .68$, $p < .01$) suggest that compatibility has a significant positive influence on subscribers' attitudes toward MIM communication (Table 8). Moreover, compatibility was found to be the most significant determinant of Attitude. Therefore, this study confirmed research hypothesis 6. H6 is consistent with the DTPB as well as the findings of previous studies including To et al. (2008), Teo and Pok (2003) and Taylor and Todd (1995). Compatibility refers to how well an innovation fits with the potential adopter's existing values, previous experiences and current needs (Teo & Pok, 2003). Moreover, in accordance with the Innovation Diffusion Theory by Rogers (1995), the greater the compatibility of an innovation, the faster it's rate of adoption. The results suggest that in South Africa, mobile subscribers' view MIM to be compatible with their lifestyles, values and norms. Hence compatibility is found to have a significant influence on consumers' attitudes toward MIM communication. Consumers view MIM as being more of a lifestyle product as opposed to a technological innovation. This makes sense considering that in today's fast paced society, mobile subscribers appreciate the use of feature rich information exchange on the fly; they want to know whether their messages were successfully delivered and read by the intended recipient. In addition, the demographic profile of

respondents' show that MIM is used mainly for personal communication (69%). Hence, mobile subscribers feel more comfortable using MIM for casual communication. A possible explanation could be the use of facial expressions and body language to express the moods of users' during conversations. Similarly, consumers are now comfortable enough to take pictures, record music / videos on the fly and forward them to friends, family and colleagues almost instantly. For these reasons one may infer that MIM is compatible with subscribers' lifestyles and positively influences their attitude toward MIM adoption.

5.9 Discussion - Hypothesis 7

Research hypothesis 7 (H7) proposed that perceived presence awareness is positively associated with consumers attitudes toward MIM communication. Findings for H7 ($\beta = -.23$, $p < .01$) suggest that perceived presence awareness has a significant negative effect on subscribers' attitudes toward MIM communication (Table 8), hence this study failed to confirm research hypothesis 7. The finding is contrary to the results reported in previous IM adoption studies including Ke and Li (2009) and To et al. (2008). Perceive presence awareness, according to Cameron and Webster (2005) and To et al. (2008), is a defining characteristic of MIM. With presence awareness, a sense of connectivity is formed among users even with no dialogue in place.

According to Social Presence Theory, the critical factor of a communication medium is its social presence, which is defined as the "degree of salience of the other person in the interaction and the consequent salience of the interpersonal relationships" (Ke & Li, 2009; Sallnäs et al., 2000). The results suggest that subscribers in South Africa do not find PPA to be an attractive characteristic of MIM. Moreover, the social presence associated with MIM is found to have a significant negative effect on subscribers' attitudes toward MIM communication.

A possible explanation could be that users need to constantly keep track of their presence status (i.e. online, away, busy, in a meeting, etc.) and update it accordingly, otherwise they risk being bombarded with IM communication from participants within their respective IM communities. According to Guidry (2004), this is viewed as undesirable by some and has led to MIM gaining a reputation as an "Instant Annoyance",

resulting in users seeking to hide their online presence from all or some other users. For these reasons, we can thus infer that subscribers perceive presence awareness as having a significant negative effect on their attitudes toward MIM communication.

5.10 Discussion - Hypothesis 8

Research hypothesis 8 (H8) of this study proposed that significant other influences are positively associated with the subjective norms. Findings for H8 ($\beta = .90$, $p < .01$) confirmed that significant others has a significant positive influence on subjective norms (Table 8), therefore, this study confirmed research hypothesis 8. H8 is consistent with the DTPB as well as the findings of previous adoption studies including Ke and Li (2009), Shih and Fang (2004) and Teo and Pok (2003). Significant others, according to DTPB (Ke & Li, 2009) comprise of referent groups such as friends, family and colleagues. The results suggest that in the South Africa, referent groups such as friends, family and colleagues have a significant positive influence on subjective norms.

Ke and Li (2009) and Tan and Teo (2000) specified that during early stages of an innovation, potential adopters do not have much information about the new innovation, hence they rely on referent groups for information and their opinions before deciding on the innovation. For this reason one may infer that influences from significant others have a positive effect toward subject norms. However, according to the decomposition of effect (Table 7) the total effect of significant others on behavioural intention is still negligible. The reason for this is that the effect of significant others on behavioural intention is mediated via subjective norms which is found to have an insignificant effect on behavioural intention. Consequently, significant others also has an insignificant effect on behavioural intention.

5.11 Discussion - Hypothesis 9

Research hypothesis 9 (H9) of this study proposed that self-efficacy is positively associated with perceived behavioural control. Findings for H9 ($\beta = .23$, $p > .10$) confirmed that self-efficacy has no significant effect on perceived behavioural control (Table 8), thus this study failed to confirm research hypothesis 9. H9 is contrary to the

DTPB as well as the findings reported in previous adoption studies including Ke and Li (2009), Ajjan and Hartshorne (2008) and To et al. (2008). Self-efficacy, according to the DTPB, is defined as an individual's perceived capability to perform a particular behaviour (Taylor & Todd, 1995). The results suggest that in South Africa, self-efficacy is found to have an insignificant effect on the adoption of MIM for communication. A likely reason for this lack of support is not because subscribers perceive they are incapable of using MIM, but rather the opposite, that MIM is so simple and straightforward that subscribers feel they do not need to possess any skills as such to make use of the technology. This makes sense considering that 86% of all respondents were educated white-collar professionals who are knowledgeable enough to appreciate the benefits of MIM. Consequently, subscribers may take the simplicity and straightforwardness of IM for granted and not view self-efficacy as influencing their intention to adopt MIM for communication.

5.12 Discussion - Hypothesis 10

Research hypothesis 10 (H10) of this study proposed that facilitating conditions is positively associated with perceived behavioural control. Findings for H10 ($\beta = .78$, $p < .01$) confirmed that facilitating conditions has a significant positive influence on perceived behavioural control (Table 8), therefore this study confirmed research hypothesis 10. H10 is consistent with the DTPB as well as the findings reported by To et al. (2008). According to Ajjan and Hartshorne (2008), facilitating conditions deals with the availability of resources such as the time, money and other resources required to facilitate a particular behaviour. The results suggest that in South Africa, the facilitating conditions necessary for MIM are found to have a significant positive influence on a subscriber's intention to adopt MIM for communication. Moreover, consumers perceive they have the necessary resources (i.e. time, money and smartphones) to make use of MIM for communication. This makes sense given that mobile operators are aggressively embarking on initiatives to flood the South African market with smartphone devices at affordable prices (BusinessTech, 2012). Also, smartphone manufacturers (e.g. iPhone and BlackBerry) are now preinstalling their devices with MIM applications in order to reduce the complexity associated with installing MIM applications from scratch, thus improving user experience on their devices. In addition, the cost of using MIM is far

cheaper than mobile SMS or MMS communication. Consequently, subscribers are able to see a significant reduction in their monthly cellphone expenses or alternatively are able to communicate more frequently with their contacts at the same cost.

5.13 MIM adoption in China vs. South Africa

Ke and Li (2009) carried out a similar study to determine the factors which influence the adoption of MIM in China. This was the only other research worldwide to study the factors that influence MIM adoption. It is based on the DTPB and shares almost identical research objectives to the current study under investigation. Hence, the research framework proposed by Ke and Li (2009) was adopted in this study. Table 9 below gives a comparison of the results for both the South African and Chinese studies.

Table 9: MIM Adoption in China vs. South Africa

H	Exogenous	→	Endogenous	Estimate (ZA)	Estimate (CN)	Result
H1	ATT	→	BI	.69***	.23**	✓
H2	SN	→	BI	.01	.37**	×
H3	PBC	→	BI	.37***	.16**	✓
H4	RA	→	ATT	.35**	.35**	✓
H5	PEOU	→	ATT	<>	.21	N/A
H6	COMP	→	ATT	.68***	<>	N/A
H7	PPA	→	ATT	-.23***	.51**	×
H8	SO	→	SN	.90***	.43**	✓
H9	SE	→	PBC	.23	.29**	×
H10	FC	→	PBC	.78***	.18	×

*Note: Standardised estimates quoted; *** = p < .01; ** = p < .05; <> = not tested, ✓ = like results, × = unlike results*

As noted in Table 9, similar findings were obtained for H1, H3, H4 and H8. Consequently, the results show that in South Africa and China, attitude, perceived behavioural control and relative advantage are mutual factors that influence the adoption of MIM for communication. Further, both studies reported significant others as having a significant positive effect on subjective norms. This is an interesting find, given that the people in both countries come from diverse cultures, have varying communication

preferences, are exposed differently to technology and are located on two different continents. Yet they still manage to share similar factors that influence their intentions to adopt MIM for communication. That being said, the findings for H1, H3, H4 and H8 could also be generalisable to settings in other countries as well. Compatibility and perceived ease of use were not mutually tested in both studies, hence the findings were incomparable.

Subjective norm was found to have a significant influence on MIM adoption in China as opposed to South Africa. According to Ke and Li (2009), this is attributed to strong social pressure from referent groups especially during the initial stages of adoption. Conversely, in South Africa, subjective norm was found to have an insignificant effect on MIM adoption, since subscribers were already familiar with PC-based IM communication and were not so reliant on pressure from referent groups to adopt MIM for communication. That being said, since subjective norms did not have a significant negative effect on behavioural intention and the sample of respondents' was also not an accurate reflection of the target population in South Africa, it may be possible for subjective norms to also have a positive effect on intention to adopt MIM for communication.

Perceived presence awareness was the only factor with disparate significant findings. In China, PPA was found to have a significant positive effect on attitude toward MIM adoption, while in South Africa PPA was found to have a significant negative effect. According to Ke and Li (2009), mobile subscribers in China appreciate having social presence mechanisms embedded in their communication medium. They prefer knowing who is online and what their statuses are, etc. Conversely, in South Africa, subscribers view presence awareness as being a bothersome characteristic of MIM. Subscribers need to constantly keep track of their status (i.e. online, away, busy, in a meeting, etc.) and update it accordingly, otherwise they risk being bombarded with IM communication from participants within their respective IM communities. Additionally, some subscribers even hide their online presence from all or some other users, just to reduce the annoyance associated with MIM communication.

In China, self-efficacy was found to have a significant positive influence on the adoption of MIM for communication, while in South Africa, no significant effect was found. This according to Ke and Li (2009), is attributed to subscribers being overly confident of their ability to use MIM for communication. A possible reason could be that China, a leading producer of electronic goods and services globally, continuously floods the Chinese market with new technology at affordable prices. Thus the people in China are forced to keep up with technology and as a result are more technologically advanced in comparison to the rest of the world. This could be the reason for self-efficacy having a positive influence on MIM adoption in China. Conversely, in South Africa, self-efficacy was found to have an insignificant effect on MIM adoption. A likely reason for the lack of support is not because subscribers perceive that they are incapable of using MIM, but rather they may take the simplicity and straightforwardness of IM for granted and not see self-efficacy as influencing their intentions to adopt MIM for communication. Therefore it is argued that in South Africa, self-efficacy also has a positive effect on intention to adopt MIM for communication. Thus, contrary to the results depicted in Table 9, it is argued that in South Africa and China, self-efficacy has a positive effect on behavioural intention to adopt MIM for communication.

Facilitating conditions was found to have an insignificant effect on the adoption of MIM in China. This, according to Ke and Li (2009), is consistent with the Chinese mobile communication market, since the cost of smartphones are considerably cheaper than normal, making it more accessible to the public. Additionally, MIM monthly service fees are also very low. As a result of facilitating conditions being readily available in China, it was taken for granted and not seen to influence subscribers' intentions to adopt MIM for communication. Conversely, in South Africa, facilitating conditions was found to have a significant positive effect on MIM adoption. This makes sense given that smartphone penetration in South Africa and Africa as a whole is the lowest worldwide (Figure 3). In addition, mobile operators in South Africa have not yet launched a fixed monthly fee for MIM, instead subscribers are charged at the data rate per megabyte of data. Consequently, in South Africa, it makes sense for facilitating conditions to have a positive effect on intention to adopt MIM for communication.

5.14 Conclusion

In this study, the researcher has identified facilitating conditions, attitude, compatibility, perceived behavioural control and relative advantage (in descending order of importance) as key factors driving South Africans to adopt MIM for communication. Although self-efficacy was found to have an insignificant effect on behavioural intention, it was later argued as having a positive effect on a behavioural intention. Significant others' was found to have a significant positive effect on subjective norms however its indirect effect on behavioural intention (Table 7) is still negligible. The reason for this is that the effect of significant others on behavioural intention is mediated via subjective norms, which has an insignificant effect on behavioural intention. Contrary to the DTPB (Figure 7), perceived presence awareness was found to have a significant negative effect on behavioural intention. When comparing the results of this study to the study carried out in China (Ke & Li, 2009) the results show that in South Africa and China, findings for attitude, perceived behavioural control, relative advantage, significant others and self-efficacy were similar. This is an interesting find, considering the vast differences between both countries. Hence it was argued that findings for H1, H3, H4, H8 and H9 could also be generalisable to settings in other countries as well.

In summary, the results of the analysis suggest that in South Africa, subscribers have a positive attitude toward MIM, they possess the necessary facilitating conditions and consequently are willing to adopt the technology for mobile communication. Moreover, according to the Innovation Diffusion Theory by Rogers (1995), the greater the compatibility and relative advantage of an innovation, the faster it's rate of adoption. As was the case in this study and suggests that the diffusion / adoption of MIM communication in South Africa is expected to accelerate in the future. Thus mobile operators must recognise that consumer behaviour is changing and there is an imminent risk of their services being eroded by OTT-based communication. Additionally, with the increased adoption of smart phones and the resulting use of MIM applications, mobile operators are poised to lose some SMS and voice revenues to the OTT providers.

CHAPTER 6: CONCLUSIONS AND RECOMMENDATIONS

6.1 Introduction

This chapter outlines the conclusions of the study, offers recommendations for MNOs' in South Africa and provides suggestions for future research.

6.2 Conclusions of the study

This research has identified facilitating conditions, attitude, compatibility, perceived behavioural control, relative advantage and self-efficacy (in descending order of importance) as key factors driving South Africans to adopt MIM for communication. Subjective norms' was found to have an insignificant effect on behavioural intention. Further, significant others' was found to have a significant positive effect on subjective norms, however its overall effect on behavioural intention was still found to be negligible (Table 7). Contrary to the DTPB (Figure 7), perceived presence awareness was found to have a significant negative effect on behavioural intention, while perceived ease of use was not examined in this study.

The results show that in South Africa, subscribers have a positive attitude toward MIM adoption. They possess the necessary facilitating conditions (i.e. time, money and smartphones) and have the ability to make use of MIM services for communication. As a result consumers are willing to adopt the technology for mobile communication. The fact that MIM services are free or cheap is not the only reason for the uptake. Subscribers use MIM because they perceive it to be better than mobile operators' own services, including SMS and MMS communication. Hence, as smartphone penetration increases and subscribers engage more frequently with OTT communication applications (such as Whatsapp, BBM, Mxit and Viber), mobile operators will see a steady decline in their voice and messaging revenue streams. Moreover, with the increasing popularity of OTT communication, mobile operators risk losing visibility of their customers who, in turn could lose interest in their mobile network provider (Clark-Dickson & Talmesio, 2012). Mobile operators in South Africa must recognise that consumer behaviour is changing. Consumers are moving away from basic messaging services to more advanced, feature

rich, IP based communication at affordable prices. Consequently, by knowing what the factors are that influence the adoption of MIM IP based communication, mobile operators can utilise this information to their advantage to develop their own branded IP based products and services that appeal to the South African market. Moreover, a shift in consumer communication preferences should result in a corresponding shift in operator business models. MNO's must focus on developing their IP services portfolio as well as upgrading their network infrastructure to support billing based on IP service transactions as opposed to per minute billing. In summary, mobile operators' will need to have a strategy in place for OTT-based communication, otherwise there is an imminent risk of their voice and SMS services being eroded. In the likely event of MIM becoming the preferred means of communication in South Africa, the following implications for mobile operators apply:

- The increasing adoption of OTT communication will result in mobile operators seeing a steady decline in their voice and messaging revenues
- Mobile operators will need to have a strategy for OTT communication in order to safeguard existing voice and messaging revenues.
- Increases in data traffic and revenue are expected as OTT communication services are transported over an operator's data network which is billed per kilo byte of data. Consequently, MNOs will need to expand their broadband capacity in order to cater for an influx of smartphone users wanting access to the internet.
- Operators must expand their portfolio of IP services and persuade consumers to use their services as opposed to OTT-based communication, in order to safeguard their revenue streams.
- Mobile operators will need to update their business models, since consumers will now be charged for content (i.e. IP services) as opposed to the flat rate per kilobyte for accessing the internet. Consequently, MNOs will need to upgrade their network infrastructure to support content based billing.

6.3 Recommendations for MNOs in South Africa

Mobile operators will need to have a strategy in place for OTT communication in order to safeguard existing voice and messaging revenues. Operators must look toward a strategy to minimise the negative impact on their revenue streams, brand awareness and resulting churn of customers to third party OTT communication providers. Clark-Dickson and Talmesio (2012) have identified five main strategies for mobile operators to deal with the threat from OTT-based communication services. These include, do nothing, fight OTT, neutralise the effects of OTT, partner with OTT providers, or emulate OTT services. These strategies, according to Clark-Dickson and Talmesio (2012), are not usually carried out in isolation, instead operators must apply a mix of them in order to minimise the effects of OTT providers. Below is a brief description of each strategy.

Strategy 1 - Do nothing: Mobile operators may choose to do nothing and embrace OTT communication on their network. This approach, according to Clark-Dickson and Talmesio (2012), will increase data usage on the network as well as motivate consumers to adopt recurring data plans. In some cases, operators can also benefit from the monthly charges associated with using OTT services. One such example includes the use of BlackBerry Messenger (BBM) services, where subscribers pay a monthly fee to their respective mobile network operator to use the services.

Strategy 2 – Fight OTT services: Mobile operators can fight OTT-based communication directly, by either blocking OTT traffic altogether or by ruining the service experience on their network. Through Deep Packet Inspection (DPI), mobile operators are able to inspect all data packets flowing through their network and can selectively decide to block or disrupt MVOIP and MIM data traffic. Consequently, operators can use this approach to their advantage and force consumers to buy an add-on plan that is aimed at unblocking MVOIP and MIM communication (Clark-Dickson & Talmesio, 2012).

Strategy 3 – Neutralise the effect of OTT: An attractive characteristic of OTT services is its ability to facilitate cheaper communication, thus enabling consumers to save money. Therefore in order to neutralise the effect of OTT services, Clark-Dickson and Talmesio (2012) proposed that operators introduce larger voice and messaging bundles so that customers do not need to use OTT services in order to save money. According to Clark-

Dickson and Talmesio (2012), larger bundles must be accompanied with integrated price plans for data, texting and voice such that the overall customer spend is reduced.

Strategy 4 – Partnering with OTT providers: Mobile operators can choose to partner with OTT providers with the aim of benefitting from both their services and also their brand (Clark-Dickson & Talmesio, 2012). Additionally, operators partner with OTT providers with the hope of increasing the range of services on offer as well as to benefit from the number of potentially billable events that OTT users' generate (Clark-Dickson & Talmesio, 2012).

Strategy 5 – Emulating OTT services: With this strategy, operators are developing their own OTT-like services for mobile communication. Mobile operators not only replicate OTT services, but also adopt their business models (Clark-Dickson & Talmesio, 2012). The reason for this is that operators recognise that in order not to be side-lined by the OTT service providers, they would need to think and act as OTT service providers do (Clark-Dickson & Talmesio, 2012). Consequently, mobile operators will need to develop services that give the same rich user experience as OTT communication services.

6.4 Suggestions for future research

The results of this study have implications for future research, especially owing to the lack of prior research on the adoption of MIM for communication. Accordingly, this study makes three suggestions for future research. First, there may be additional factors that could further explain consumers' behavioural intention to adopt MIM for communication. Teo and Pok (2003), To et al. (2008) and Maditinos, Tsairidis, and Grigoriadis (2009) discussed additional factors, including image, risk, critical mass, security, trialability and perceived playfulness as determinants of attitude and how they influence behavioural intention to adopt MIM for communication. Moreover, perceived ease of use would need to be further investigated, as it was excluded from the CFA for being highly correlated with perceived behavioural control.

Second, Clark-Dickson and Talmesio (2012) have identified five main strategies for mobile operators to deal with the threat from OTT-based communication services. These include, do nothing, fight OTT, neutralise the effects of OTT, partner with OTT providers

or emulate OTT services. Thus, further research may be carried out to determine which strategy or strategy-mix will be most appropriate for mobile network operators' in South Africa.

Third, since mobile internet communication comprises both MIM and MVoIP technologies, this study could be extended to include MVoIP in the near future. The hype generated by MIM has certainly fuelled expectations for MVoIP, and it will be interesting to compare the adoption process of these two similar innovations.

REFERENCES

Ajjan, H., & Hartshorne, R. (2008). Investigating faculty decisions to adopt Web 2.0 technologies: Theory and empirical tests. *The Internet and Higher Education, 11*(2), 71-80.

Ajzen, I. (1991). The theory of planned behavior. *Organizational behavior and human decision processes, 50*(2), 179-211.

Al-Majali, M. M. (2011). *The antecedents of internet banking service adoption in Jordan: using decomposed theory of planned behavior.* (PhD thesis), Universiti Utara Malaysia, Malaysia.

Amaratunga, D., Baldry, D., Sarshar, M., & Newton, R. (2002). Quantitative and qualitative research in the built environment: application of "mixed" research approach. *Work study, 51*(1), 17-31.

Bagozzi, R. P. (1981). Attitudes, intentions, and behavior: A test of some key hypotheses. *Journal of Personality and Social Psychology; Journal of Personality and Social Psychology, 41*(4), 607.

Bandalos, D. L., & Finney, S. J. (2001). Item parceling issues in structural equation modeling. *New developments and techniques in structural equation modeling, 269*.

Barnes, S. J. (2002). The mobile commerce value chain: analysis and future developments. *International Journal of Information Management, 22*(2), 91-108.

Berger, I. (1993). A framework for understanding the relationship between environmental attitudes and consumer behavior. *Marketing theory and application, 4*, 157-163.

Bhattacherjee, A. (2000). Acceptance of e-commerce services: the case of electronic brokerages. *IEEE Transactions on Systems, Man and Cybernetics, Part A: Systems and Humans, 30*(4), 411-420.

Business Monitor International. (2009). South Africa Telecommunications Report Q1 2010. (pp. 1-101). London: Business Monitor International.

Business Monitor International. (2011). South Africa Telecommunications Report Q2 2011 (pp. 1-115). London: Business Monitor International.

BusinessTech. (2012). South Africans in debt for smartphones. Retrieved 20th January, 2013, from http://businesstech.co.za/news/mobile/27050/south-africans-in-debt-for-smartphones/

Cameron, A. F., & Webster, J. (2005). Unintended consequences of emerging communication technologies: Instant messaging in the workplace. *Computers in Human Behavior, 21*(1), 85-103.

Campbell, S. J. (2012). What Is Mobile VoIP? Retrieved 7th January 2013, from http://www.tmcnet.com/channels/mobile-voip/articles/168389-what-mobile-voip.htm

Carter, L., & Bélanger, F. (2005). The utilization of e-government services: citizen trust, innovation and acceptance factors*. *Information Systems Journal, 15*(1), 5-25.

Chau, P. Y. K., & Lai, V. S. K. (2003). An empirical investigation of the determinants of user acceptance of internet banking. *Journal of Organizational Computing and Electronic Commerce, 13*(2), 123-145.

Chen, L., Gillenson, M. L., & Sherrell, D. L. (2002). Enticing online consumers: an extended technology acceptance perspective. *Information & Management, 39*(8), 705-719.

Cisco, V. N. I. (2011). Global mobile data traffic forecast update, 2010-2015 *Cisco white paper* (pp. 1-27). Cisco Systems: United States.

Clark-Dickson, P., & Talmesio, D. (2012). Mobile VoIP and IP Messaging: Operator strategies to combat the threat from OTT players. (pp. 1-73). Informa Telecoms & Media: United Kingdom.

Colorado State University. (2013). Survey Research Retrieved 22nd January, 2013, from http://writing.colostate.edu/guides/guide.cfm?guideid=68

Davis, F. D. (1989). Perceived usefulness, perceived ease of use, and user acceptance of information technology. *MIS quarterly*, 319-340.

Davis, F. D., Bagozzi, R. P., & Warshaw, P. R. (1989). User acceptance of computer technology: a comparison of two theoretical models. *Management science, 35*(8), 982-1003.

Deng, Z., Lu, Y., Wei, K. K., & Zhang, J. (2010). Understanding customer satisfaction and loyalty: An empirical study of mobile instant messages in China. *International Journal of Information Management, 30*(4), 289-300.

Esselaar, S., Gillwald, A., Moyo, M., & Naidoo, K. (2010). South African ICT Sector Performance Review 2009/2010 (Vol. 2, pp. 1-46). Johannesburg: researchICTafrica.

Faziharudean, T., & Li-Ly, T. (2011). Consumers' behavioral intentions to use mobile data services in Malaysia. *African Journal of Business Management, 5*(5), 1811-1821.

Fishbein, M., & Ajzen, I. (1975). *Belief, attitude, intention and behavior: An introduction to theory and research*: Addison-Wesley.

Fornell, C., & Larcker, D. F. (1981). Evaluating structural equation models with unobservable variables and measurement error. *Journal of Marketing Research*, 39-50.

Fricker, R. (2008). Sampling methods for web and e-mail surveys. *N. Fielding*, 195-216.

Gefen, D., Karahanna, E., & Straub, D. W. (2003). Trust and TAM in online shopping: An integrated model. *MIS Quarterly*, 51-90.

Guidry, K. R. (2004). Instant Messaging: Its Impact on and Recommendations for Student Affairs Retrieved December 28, 2012, from http://studentaffairs.com/ejournal/Fall_2004/InstantMessaging.html

Hair, F., Anderson, E., Black, W., & Tatham, R. (2010). *Multivariate data analysis: A global perspective* (7th ed.). New Jersey: Pearson Prentice Hall.

Ho, S. H., & Ko, Y. Y. (2008). Effects of self-service technology on customer value and customer readiness: The case of Internet banking. *Internet Research, 18*(4), 427-446.

Huang, A., & Yen, D. C. (2003). Usefulness of instant messaging among young users: Social vs. work perspective. *Human Systems Management, 22*(2), 63-72.

Janssen, C. (2012). Mobile Network Operator (MNO) Retrieved 7th January, 2013, from http://www.techopedia.com/definition/27804/mobile-network-operator-mno

Johnson, R. B., & Onwuegbuzie, A. J. (2004). Mixed methods research: A research paradigm whose time has come. *Educational researcher, 33*(7), 14-26.

Ke, Y., & Li, W. (2009). *A study of the factors affecting the adoption of mobile instant messaging in China.* Paper presented at the Mobile Business, 2009. ICMB 2009. Eighth International Conference.

Kelley, K., Clark, B., Brown, V., & Sitzia, J. (2003). Good practice in the conduct and reporting of survey research. *International Journal for Quality in Health Care, 15*(3), 261-266.

Kline, R. B. (2010). *Principles and practice of structural equation modeling* (3rd ed.). New York, NY: Guilford press.

Koch, T., & Harrington, A. (1998). Reconceptualizing rigour: the case for reflexivity. *Journal of Advanced Nursing, 28*(4), 882-890.

Kotrlik, J. W. K. J. W., & Higgins, C. C. H. C. C. (2001). Organizational Research: Determining Appropriate Sample Size in Survey Research Appropriate Sample Size in Survey Research. *Information Technology, Learning, and Performance Journal, 19*(1), 43.

Lange, P. (2010). South Africa - Telecoms, Mobile, Broadband and Forecasts *Paul Budde Communication Pty Ltd* (pp. 1-140). Australia.

Little, T. D., Cunningham, W. A., Shahar, G., & Widaman, K. F. (2002). To parcel or not to parcel: Exploring the question, weighing the merits. *Structural Equation Modeling, 9*(2), 151-173.

Lleras, C. (2005). Path analysis. *Encyclopedia of social measurement, 3*, 25-30.

Luo, X., Gurung, A., & Shim, J. (2010). Understanding the determinants of user acceptance of enterprise instant messaging: an empirical study. *Journal of Organizational Computing and Electronic Commerce, 20*(2), 155-181.

Maditinos, D., Tsairidis, C., & Grigoriadis, C. (2009). *Internet Banking user acceptance: Evidence from Greece and Bulgaria.* Paper presented at the 5th HSSS Conference, Democritus University of Thrace, Xanthi, Greece.

McClea, M., Yen, D. C., & Huang, A. (2004). An analytical study towards the development of a standardized IM application. *Computer Standards & Interfaces, 26*(4), 343-355.

McQueen, D. (2010). The roadmap towards broadband-speed mobile networks: LTE is expected to stimulate handset sales in the mid-term Retrieved 21st January, 2013, from http://www.informatm.com/itmgcontent/icoms/product/TGD/190/20017823261.html

Milne, J. (1999). Questionnaires: Advantages and Disadvantages Retrieved 22nd January, 2013, from http://www.icbl.hw.ac.uk/ltdi/cookbook/info_questionnaires/index.html

Mitchell, B. (2013). What Is Mobile Broadband? Retrieved 12th January, 2013, from http://compnetworking.about.com/od/internetaccessbestuses/f/what-is-mobile-broadband.htm

Moore, G. C., & Benbasat, I. (1991). Development of an instrument to measure the perceptions of adopting an information technology innovation. *Information Systems Research, 2*(3), 192-222.

Moyo, A. (2012). Mobile VOIP threatens voice revenues Retrieved 1st January, 2013, from http://www.itweb.co.za/index.php?option=com_content&view=article&id=53279

Muller, R. (2012). Mobile messenger war Retrieved 10th January, 2013, from http://businesstech.co.za/news/mobile/25205/mobile-messenger-war/

Nor, K. M., Shanab, E. A. A., & Pearson, J. M. (2008). Internet banking acceptance in Malaysia based on the theory of reasoned action. *Journal of Information Systems and Technology Management, 5*(1), 3.

Peslak, A., Ceccucci, W., & Sendall, P. (2010). An Empirical Study of Instant Messaging Behavior Using Diffusion of Innovation Theory. *Journal of Information Systems Applied Research, 3*(18), 1-13.

Rogers, E. M. (1995). *Diffusion of innovations*: Simon and Schuster.

Sallnäs, E. L., Rassmus-Gröhn, K., & Sjöström, C. (2000). Supporting presence in collaborative environments by haptic force feedback. *ACM Transactions on Computer-Human Interaction (TOCHI), 7*(4), 461-476.

Shih, Y. Y., & Fang, K. (2004). The use of a decomposed theory of planned behavior to study Internet banking in Taiwan. *Internet Research, 14*(3), 213-223.

Shimp, T. A., & Kavas, A. (1984). The theory of reasoned action applied to coupon usage. *Journal of Consumer Research*, 795-809.

Statistics South Africa. (2011). Census 2011 Retrieved 21st January, 2013, from http://www.statssa.gov.za/Publications/P03014/P030142011.pdf

Streubert, H. J., & Carpenter, D. R. (1999). *Qualitative Research in Nursing: Advancing the Humanistic Imperative (2nd ed.).* Philadelphia: Lippincott.

Tan, M., & Teo, T. S. H. (2000). Factors influencing the adoption of Internet banking. *Journal of the AIS, 1*(1), 5.

Taylor, S., & Todd, P. A. (1995). Understanding information technology usage: A test of competing models. *Information systems research, 6*(2), 144-176.

Teo, T. S. H., & Pok, S. H. (2003). Adoption of WAP-enabled mobile phones among Internet users. *Omega, 31*(6), 483-498.

To, P. L., Liao, C., Chiang, J. C., Shih, M. L., & Chang, C. Y. (2008). An empirical investigation of the factors affecting the adoption of Instant Messaging in organizations. *Computer Standards & Interfaces, 30*(3), 148-156.

Ullah, I. (2010). Data Mining Algorithms and Medical Sciences. *International Journal of Computer Science & Information Technology, 2*(6).

Van den Dam, R., & Nelson, E. (2011). *Telco 2015: Re-envision the future of mobile communications.* Paper presented at the Wireless Telecommunications Symposium (WTS), 2011.

Van der Heijden, H. (2004). User acceptance of hedonic information systems. *MIS Quarterly*, 695-704.

Venkatesh, V., Morris, M. G., Davis, G. B., & Davis, F. D. (2003). User acceptance of information technology: Toward a unified view. *MIS Quarterly*, 425-478.

Vodafone. (2011). Making Broadband Accessible For All *The Policy Paper Series 12* (pp. 1-64). Vodafone Group Plc: UK.

Walker, W. (2005). The strengths and weaknesses of research designs involving quantitative measures. *Journal of Research in Nursing, 10*(5), 571-582.

Washington, W. (2001). *Exploring ambient media presence awareness.* (Masters thesis), University of Washington, Seattle.

Willetts, K. (2009). Going over the top: Build telecom revenue with mobile social networking services Retrieved 6th January, 2013, from http://searchtelecom.techtarget.com/tip/Going-over-the-top-Build-telecom-revenue-with-mobile-social-networking-services

World Wide Worx. (2012). Internet Access in South Africa 2012 Retrieved 13th January, 2013, from http://www.worldwideworx.com/wp-content/uploads/2012/12/Exec-Summary-Internet-Access-in-SA-2012.pdf

Yan, X. (2003). Mobile data communications in China. *Communications of the ACM, 46*(12), 80-85.

APPENDIX A

LETTER TO RESPONDENTS

Dear Respondent,

I am completing my MBA at the University of Witwatersrand, Johannesburg (Wits). My MBA thesis is to determine the factors influencing the adoption of mobile internet applications (e.g. Whatsapp, BBM, Mxit and Viber) as a means of communication in South Africa. Towards gathering data on this subject, I would be grateful if you can complete the following online survey: https://www.surveymonkey.com/s/QSLLCNT

The purpose of the survey is to gather data on the communication preferences of mobile subscribers in South Africa. This research will assist Mobile Network Operators in South Africa to identify fundamental shifts in human communication behaviour and to design innovative products and services to improve customer experience. It is intended to benefit both the mobile operator and the subscriber.

Confidentiality will be observed throughout the thesis process and the final report will be for academic purposes only. The results of this study will be available to anyone who would like them. You are welcome to contact me using the below contact details.

Thanking you for your kind assistance.

Deena Naidoo
Cell: 082 997 4178
Email: Deena.Naidoo@Atos.net

APPENDIX B

QUESTIONNAIRE

Mobile IM Questionnaire

Section 1 – Demographic Profile

This section intends to get information about the respondents' demographic background. Please select the option which best describes you.

a) Gender

- Male
- Female

b) Ethnic Group

- Black
- White
- Indian
- Coloured

c) Age Category

- Less than 20
- 20-25
- 26-30
- 31-35
- 36-40
- 41-45
- 46-50
- 50+

d) Highest Level of Education

- Primary School
- High School
- Diploma
- Degree
- Masters
- Doctorate (PhD)

e) Current Profession

- Student
- Employed
- Unemployed
- Home-maker
- Retiree

f) Please select your current mobile Plan

- Prepaid
- Contract
- Top Up

g) Please select the Instant Messaging (IM) applications used on your mobile phone?

- Whatsapp
- Fring
- Viber
- Mxit
- BBM – BlackBerry Messenger
- Facebook Messenger
- Skype Messenger
- None – I do not use IM

h) Do you use instant messaging for personal / or business communication?

- No, I do not use mobile instant messaging.
- Yes, mainly for personal use.
- Yes, half personal, half business use.
- Yes, mainly for business use.

i) Please select the Instant Messaging "services" used when communicating on your mobile phone.

- Chatting / Group Chat
- Sending pictures and video clips
- Presence Status
- Location Information
- File Sharing
- None I do not use mobile Instant Messaging.

Section 2: MIM Preferences

Instructions:

- All questions in this section relate to Mobile Instant Messaging (e.g. BBM, Whatsapp, Mxit, etc.)
- Please indicate your response to the following statements according to the 7 point scale below.
- There are no right or wrong answers, please tell us what you really think.

1	2	3	4	5	6	7
Strongly Disagree	Disagree	Somewhat Disagree	Undecided	Somewhat Agree	Agree	Strongly Agree

Table 10: MIM Preferences

No.	Question	-1-	2	3	-4-	5	6	-7-
1	I intend to use mobile Instant Messaging for communication.							
2	Using mobile Instant Messaging would be a good idea.							
3	People who are important to me think that I should use mobile Instant Messaging.							
4	I would be able to use Instant Messaging applications.							
5	Mobile Instant Messaging improves my efficiency.							
6	Learning to operate Instant Messaging applications would be easy for me.							
7	Using mobile Instant Messaging is compatible with							

No.	Question	**-1-**	2	3	**-4-**	5	6	**-7-**
	my lifestyle.							
8	It “feels” as though the people on my “contact list” that are logged on are nearby.							
9	My decision to adopt mobile Instant Messaging will be influenced by my family members.							
10	I’m confident of using instant messaging if I have just seen someone using it before trying it myself.							
11	Mobile Instant Messaging is compatible with the cellular phone I’m currently using.							
12	I intend using mobile Instant Messaging for chatting, sharing pictures, music & video clips.							
13	I like the idea of using mobile instant messaging.							
14	People who are close to me think that I should use mobile Instant Messaging.							
15	I have the resources (mobile phone, time and money) to use mobile instant messaging							
16	Mobile Instant Messaging improves my productivity.							
17	It is easy for me to be skilful at using mobile Instant Messaging.							
18	Using mobile Instant Messaging is compatible with the way I like to communicate.							
19	Knowing the status of people on my contact list allows me to access them at any time of day or night, which I find useful.							
20	My decision to adopt mobile instant messaging will be influenced by my friends.							
21	I know enough to operate instant messaging applications on my own							
22	My 2G / 3G network coverage is sufficient for mobile instant messaging.							
23	I intend to use mobile instant messaging frequently.							
24	Using mobile instant messaging is a pleasant idea.							
25	People who influence my behaviour think that I should use mobile instant messaging.							

No.	Question	**-1-**	2	3	**-4-**	5	6	**-7-**
26	I have the knowledge to use mobile instant messaging.							
27	Mobile Instant Messaging allows me to accomplish my tasks more quickly.							
28	I find it easy to get instant messaging applications to do what I want it to do.							
29	Using mobile Instant Messaging fits well with my communication preferences.							
30	Knowing the status of the people on my “contact list” makes me feel connected with them.							
31	My decision to adopt mobile Instant Messaging will be influenced by my work colleagues / peers.							
32	I am confident of using Instant Messaging even if there is no one around to show me how to use it.							
33	I have the time to use mobile Instant Messaging.							
34	I intend to use mobile Instant Messaging rather than SMS or MMS for communication.							
35	Using mobile instant messaging is an appealing idea.							
36	People who influence my decisions think that I should use mobile Instant Messaging.							
37	I have the ability to use mobile Instant Messaging							
38	Mobile Instant Messaging provides an overall advantage to me.							
39	I find mobile Instant Messaging cumbersome (or awkward) to use.							
40	Mobile Instant Messaging fits well with all aspects of my communication activities.							
41	It is as though the people on my “contact list” that are logged on are around me.							
42	I will use mobile Instant Messaging because my friends and family use it.							
43	I am confident of using Instant Messaging even if I have never used such an application before.							
44	I have the money to pay for instant messaging services.							

APPENDIX C

OUTLIER'S DETECTION

Table 11: Z scores for the measured variables

	N	Minimum	Maximum
Zscore(BI1)	259	-2.65037	.70360
Zscore(BI2)	259	-2.64006	.80465
Zscore(BI3)	259	-2.71180	.71016
Zscore(BI4)	259	-2.61434	.66731
Zscore(ATT1)	259	-2.51684	.67335
Zscore(ATT2)	259	-2.56617	.72956
Zscore(ATT3)	259	-2.32447	.79490
Zscore(ATT4)	259	-2.87734	.80281
Zscore(SN1)	259	-2.71319	1.02864
Zscore(SN2)	259	-2.51356	.89845
Zscore(SN3)	259	-2.57129	1.12851
Zscore(SN4)	259	-2.43948	1.21621
Zscore(PBC1)	259	-2.67147	.69276
Zscore(PBC2)	259	-2.85787	.68370
Zscore(PBC3)	259	-2.95437	.65498
Zscore(PBC4)	259	-2.88594	.69613
Zscore(RA1)	259	-2.62291	.87160
Zscore(RA2)	259	-2.66582	1.11400
Zscore(RA3)	259	-2.72135	1.01120
Zscore(RA4)	259	-2.56237	.92138
Zscore(PEOU1)	259	-2.17727	.67799
Zscore(PEOU2)	259	-2.62664	.85316
Zscore(PEOU3)	259	-2.62474	.90215
Zscore(PEOU4)	259	-2.91350	.77646
Zscore(COMP1)	259	-2.21107	.77157
Zscore(COMP2)	259	-2.68968	.94996
Zscore(COMP3)	259	-2.30318	.93440
Zscore(COMP4)	259	-2.57261	1.00968
Zscore(SO1)	259	-1.72798	1.38719
Zscore(SO2)	259	-2.38744	1.21458
Zscore(SO3)	259	-2.13052	1.38416
Zscore(SO4)	259	-2.81789	1.01326
Zscore(PPA1)	259	-2.42410	1.11636
Zscore(PPA2)	259	-2.35488	.98102
Zscore(PPA3)	259	-2.07592	1.14683
Zscore(PPA4)	259	-2.01320	1.25930
Zscore(SE1)	259	-2.20997	1.17357
Zscore(SE2)	259	-2.96232	.64539
Zscore(SE3)	259	-2.98811	.76878

	N	Minimum	Maximum
Zscore(SE4)	259	-2.91774	.85131
Zscore(FC1)	259	-3.02709	.46519
Zscore(FC2)	259	-2.98696	.78681
Zscore(FC3)	259	-2.85659	.99282
Zscore(FC4)	259	-2.75786	.73072
Valid N (listwise)	259		

APPENDIX D

ASSESSMENT OF NORMALITY

Table 12: Skewness and Kurtosis indicators for the measured variables

	N	Minimum	Maximum	Mean	Skewness		Kurtosis	
	Statistic	Statistic	Statistic	Statistic	Statistic	Std. Error	Statistic	Std. Error
BI1	259	0	3	2.37	-1.358	.151	.930	.302
BI2	259	-1	3	2.07	-1.087	.151	.208	.302
BI3	259	-1	3	2.17	-1.303	.151	.664	.302
BI4	259	0	3	2.39	-1.343	.151	.679	.302
ATT1	259	0	3	2.37	-1.329	.151	.603	.302
ATT2	259	0	3	2.34	-1.182	.151	.326	.302
ATT3	259	0	3	2.24	-1.041	.151	-.030	.302
ATT4	259	-1	3	2.13	-1.150	.151	.592	.302
SN1	259	-2	3	1.63	-.713	.151	-.179	.302
SN2	259	-2	3	1.68	-.950	.151	.026	.302
SN3	259	-3	3	1.17	-.728	.151	-.018	.302
SN4	259	-3	3	1.00	-.632	.151	-.169	.302
PBC1	259	0	3	2.38	-1.326	.151	.765	.302
PBC2	259	0	3	2.42	-1.427	.151	1.248	.302
PBC3	259	0	3	2.46	-1.511	.151	1.517	.302
PBC4	259	0	3	2.42	-1.391	.151	1.176	.302
RA1	259	-2	3	1.75	-.990	.151	.043	.302
RA2	259	-3	3	1.23	-.702	.151	-.086	.302
RA3	259	-3	3	1.37	-.829	.151	-.002	.302
RA4	259	-1	3	1.94	-.815	.151	-.193	.302
PEOU1	259	1	3	2.53	-1.147	.151	-.055	.302
PEOU2	259	-1	3	2.02	-1.072	.151	.292	.302
PEOU3	259	-1	3	1.98	-.934	.151	.011	.302
PEOU4	259	-3	3	1.74	-1.456	.151	1.368	.302
COMP1	259	0	3	2.22	-1.037	.151	-.179	.302
COMP2	259	-2	3	1.69	-.928	.151	.094	.302
COMP3	259	-1	3	1.85	-.821	.151	-.375	.302
COMP4	259	-2	3	1.59	-.904	.151	.151	.302
SO1	259	-3	3	.33	-.241	.151	-1.003	.302
SO2	259	-3	3	.98	-.790	.151	.027	.302
SO3	259	-3	3	.64	-.429	.151	-.639	.302
SO4	259	-3	3	1.41	-.970	.151	.289	.302
PPA1	259	-3	3	1.11	-.748	.151	-.096	.302
PPA2	259	-3	3	1.24	-.828	.151	-.345	.302
PPA3	259	-3	3	.86	-.568	.151	-.787	.302
PPA4	259	-3	3	.69	-.518	.151	-.707	.302
SE1	259	-3	3	.92	-.625	.151	-.508	.302
SE2	259	0	3	2.46	-1.574	.151	1.758	.302

	N	Minimum	Maximum	Mean	Skewness		Kurtosis	
	Statistic	Statistic	Statistic	Statistic	Statistic	Std. Error	Statistic	Std. Error
SE3	259	-1	3	2.18	-1.339	.151	1.161	.302
SE4	259	-1	3	2.10	-1.135	.151	.651	.302
FC1	259	1	3	2.73	-2.048	.151	3.040	.302
FC2	259	-1	3	2.17	-1.281	.151	1.051	.302
FC3	259	-2	3	1.71	-.839	.151	.080	.302
FC4	259	-1	3	2.16	-1.348	.151	.944	.302
Valid N (listwise)	259							

Note: SPSS reports "Kurtosis -3"

APPENDIX E

TESTS FOR MULTICOLLINEARITY

Table 13: Inter-Item correlation matrix

	BI	ATT	SN	PBC	RA	PEOU	COMP	PPA	SO	SE	FC
BI	1.000	.881	.532	.766	.658	.694	.752	.402	.329	.632	.665
ATT	.881	1.000	.582	.725	.715	.722	.789	.429	.364	.576	.626
SN	.532	.582	1.000	.466	.644	.457	.553	.559	.690	.503	.399
PBC	.766	.725	.466	1.000	.565	.781	.645	.244	.287	.746	.803
RA	.658	.715	.644	.565	1.000	.636	.783	.586	.473	.599	.572
PEOU	.694	.722	.457	.781	.636	1.000	.691	.271	.265	.664	.647
COMP	.752	.789	.553	.645	.783	.691	1.000	.531	.430	.660	.645
PPA	.402	.429	.559	.244	.586	.271	.531	1.000	.572	.402	.283
SO	.329	.364	.690	.287	.473	.265	.430	.572	1.000	.434	.300
SE	.632	.576	.503	.746	.599	.664	.660	.402	.434	1.000	.722
FC	.665	.626	.399	.803	.572	.647	.645	.283	.300	.722	1.000

Table 14: VIF Scores

Model	Collinearity Statistics	
	Tolerance	VIF
BI1	.382	2.618
BI2	.148	6.744
BI3	.296	3.380
BI4	.346	2.891
ATT1	.318	3.141
ATT2	.202	4.953
ATT3	.191	5.241
ATT4	.203	4.932
SN1	.362	2.763
SN2	.316	3.160
SN3	.233	4.296
SN4	.303	3.298
PBC1	.297	3.365
PBC2	.333	3.000
PBC3	.176	5.697
PBC4	.220	4.547
RA1	.290	3.449
RA2	.243	4.122
RA3	.290	3.450
RA4	.216	4.640
PEOU1	.307	3.262
PEOU2	.274	3.651
PEOU3	.314	3.190
PEOU4	.671	1.490
COMP1	.329	3.040
COMP2	.194	5.142
COMP3	.182	5.498
COMP4	.263	3.803
SO1	.523	1.914
SO2	.357	2.801
SO3	.417	2.396
SO4	.449	2.229
PPA1	.492	2.034
PPA2	.411	2.433

PPA3	.288	3.467
PPA4	.311	3.212
SE1	.630	1.586
SE2	.174	5.735
SE3	.287	3.489
SE4	.328	3.046
FC1	.328	3.050
FC2	.483	2.072
FC3	.319	3.136
FC4	.495	2.020

Note: Dependent Variable: Rand_DV

APPENDIX F

SQUARED INTER-ITEM CORRELLATION MATRIX

Table 15: Squared inter-Item correlation matrix

	BI^2	ATT^2	SN^2	PBC^2	RA^2	$PEOU^2$	$COMP^2$	PPA^2	SO^2	SE^2	FC^2
BI^2	1.00	0.78	0.28	0.59	0.43	0.48	0.57	0.16	0.11	0.40	0.44
ATT^2	0.78	1.00	0.34	0.53	0.51	0.52	0.62	0.18	0.13	0.33	0.39
SN^2	0.28	0.34	1.00	0.22	0.41	0.21	0.31	0.31	0.48	0.25	0.16
PBC^2	0.59	0.53	0.22	1.00	0.32	0.61	0.42	0.06	0.08	0.56	0.64
RA^2	0.43	0.51	0.41	0.32	1.00	0.40	0.61	0.34	0.22	0.36	0.33
$PEOU^2$	0.48	0.52	0.21	0.61	0.40	1.00	0.48	0.07	0.07	0.44	0.42
$COMP^2$	0.57	0.62	0.31	0.42	0.61	0.48	1.00	0.28	0.18	0.44	0.42
PPA^2	0.16	0.18	0.31	0.06	0.34	0.07	0.28	1.00	0.33	0.16	0.08
SO^2	0.11	0.13	0.48	0.08	0.22	0.07	0.18	0.33	1.00	0.19	0.09
SE^2	0.40	0.33	0.25	0.56	0.36	0.44	0.44	0.16	0.19	1.00	0.52
FC^2	0.44	0.39	0.16	0.64	0.33	0.42	0.42	0.08	0.09	0.52	1.00

APPENDIX G

CONFIRMATORY FACTOR ANALYSIS

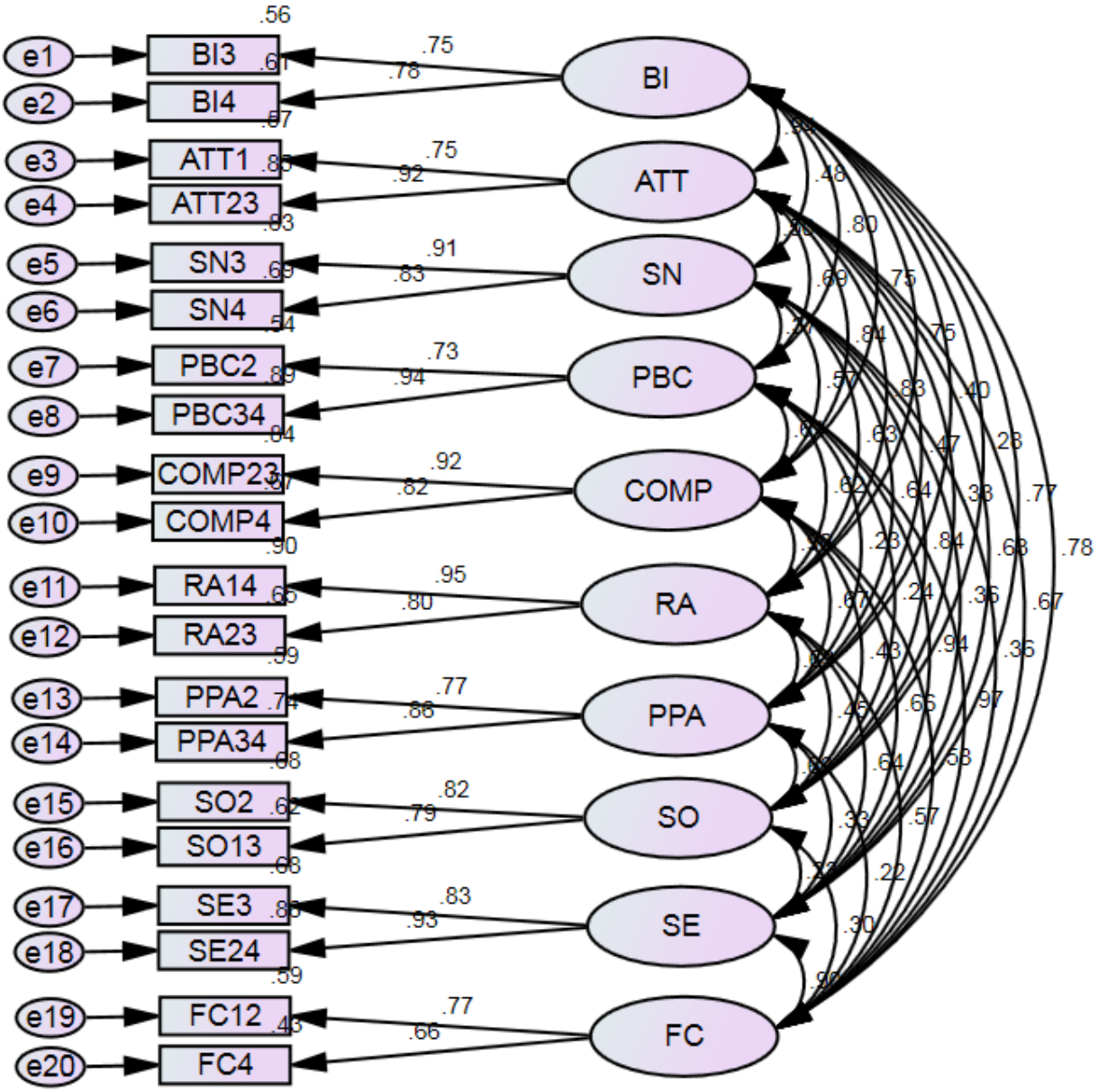

Figure 12: CFA Analysis – Amos Output

(Note – Standardised regression weights quoted)

Amos Output

Notes for Model (Default model)
Computation of degrees of freedom (Default model)
Number of distinct sample moments : 210
Number of distinct parameters to be estimated : 85
Degrees of freedom (210 - 85) : 125
Result (Default model)
Minimum was achieved
Chi-square : 220.920
Degrees of freedom : 125
Probability level : .000

Regression Weights: (Group number 1 - Default model)

			Estimate	S.E.	C.R.	P	Label
SN3	<---	SN	1.000				
SN4	<---	SN	.924	.056	16.487	***	par_1
ATT1	<---	ATT	1.000				
ATT23	<---	ATT	1.150	.076	15.053	***	par_2
BI3	<---	BI	1.000				
BI4	<---	BI	.820	.065	12.563	***	par_3
PBC2	<---	PBC	.836	.055	15.212	***	par_4
COMP23	<---	COMP	1.000				
COMP4	<---	COMP	1.007	.057	17.619	***	par_11
RA14	<---	RA	1.000				
RA23	<---	RA	1.123	.063	17.720	***	par_16
PPA2	<---	PPA	1.000				
PPA34	<---	PPA	1.066	.089	12.039	***	par_22
SO2	<---	SO	1.000				
SO13	<---	SO	.885	.070	12.625	***	par_29
SE3	<---	SE	1.118	.060	18.735	***	par_37
SE24	<---	SE	1.000				
FC12	<---	FC	1.000				
FC4	<---	FC	1.402	.132	10.644	***	par_46
PBC34	<---	PBC	1.000				

Standardized Regression Weights: (Group number 1 - Default model)

			Estimate
SN3	<---	SN	.910
SN4	<---	SN	.831
ATT1	<---	ATT	.752
ATT23	<---	ATT	.921
BI3	<---	BI	.746
BI4	<---	BI	.782
PBC2	<---	PBC	.733
COMP23	<---	COMP	.915
COMP4	<---	COMP	.818
RA14	<---	RA	.949
RA23	<---	RA	.804
PPA2	<---	PPA	.768
PPA34	<---	PPA	.859
SO2	<---	SO	.824
SO13	<---	SO	.790
SE3	<---	SE	.827
SE24	<---	SE	.926
FC12	<---	FC	.770
FC4	<---	FC	.657
PBC34	<---	PBC	.944

Modification Indices
Covariances: (Group number 1 - Default model)

			M.I.	Par Change
e20	<-->	ATT	5.016	-.049
e16	<-->	PPA	5.191	.169
e15	<-->	PPA	4.464	-.164
e14	<-->	e17	5.906	.112
e14	<-->	e16	11.793	.265
e14	<-->	e15	13.786	-.301
e12	<-->	e14	5.099	.153
e10	<-->	SE	4.479	.047
e10	<-->	SN	7.526	.148
e9	<-->	SN	4.131	-.081
e7	<-->	SE	6.015	-.036
e7	<-->	COMP	4.208	.048
e7	<-->	e20	5.860	.080
e7	<-->	e17	9.561	-.074
e7	<-->	e9	5.385	.055

			M.I.	Par Change
e4	<-->	e1	7.449	-.062
e3	<-->	e1	6.294	.084
e6	<-->	e2	5.295	-.091
e5	<-->	e7	4.263	.070

Squared Multiple Correlations: (Group number 1 - Default model)

	Estimate
PBC34	.891
FC4	.432
FC12	.593
SE24	.858
SE3	.684
SO13	.625
SO2	.678
PPA34	.739
PPA2	.590
RA23	.646
RA14	.900
COMP4	.669
COMP23	.838
PBC2	.537
BI4	.612
BI3	.556
ATT23	.848
ATT1	.565
SN4	.691
SN3	.829

CFA - Model Fit Analysis

CMIN

Model	NPAR	CMIN	DF	P	CMIN/DF
Default model	85	220.920	125	.000	1.767
Saturated model	210	.000	0		
Independence model	20	3855.524	190	.000	20.292

RMR, GFI

Model	RMR	GFI	AGFI	PGFI
Default model	.063	.924	.872	.550
Saturated model	.000	1.000		
Independence model	.676	.204	.121	.185

Baseline Comparisons

Model	NFI Delta1	RFI rho1	IFI Delta2	TLI rho2	CFI
Default model	.943	.913	.974	.960	.974
Saturated model	1.000		1.000		1.000
Independence model	.000	.000	.000	.000	.000

RMSEA

Model	RMSEA	LO 90	HI 90	PCLOSE
Default model	.055	.043	.066	.254
Independence model	.273	.266	.281	.000

APPENDIX H

STRUCTURAL MODEL

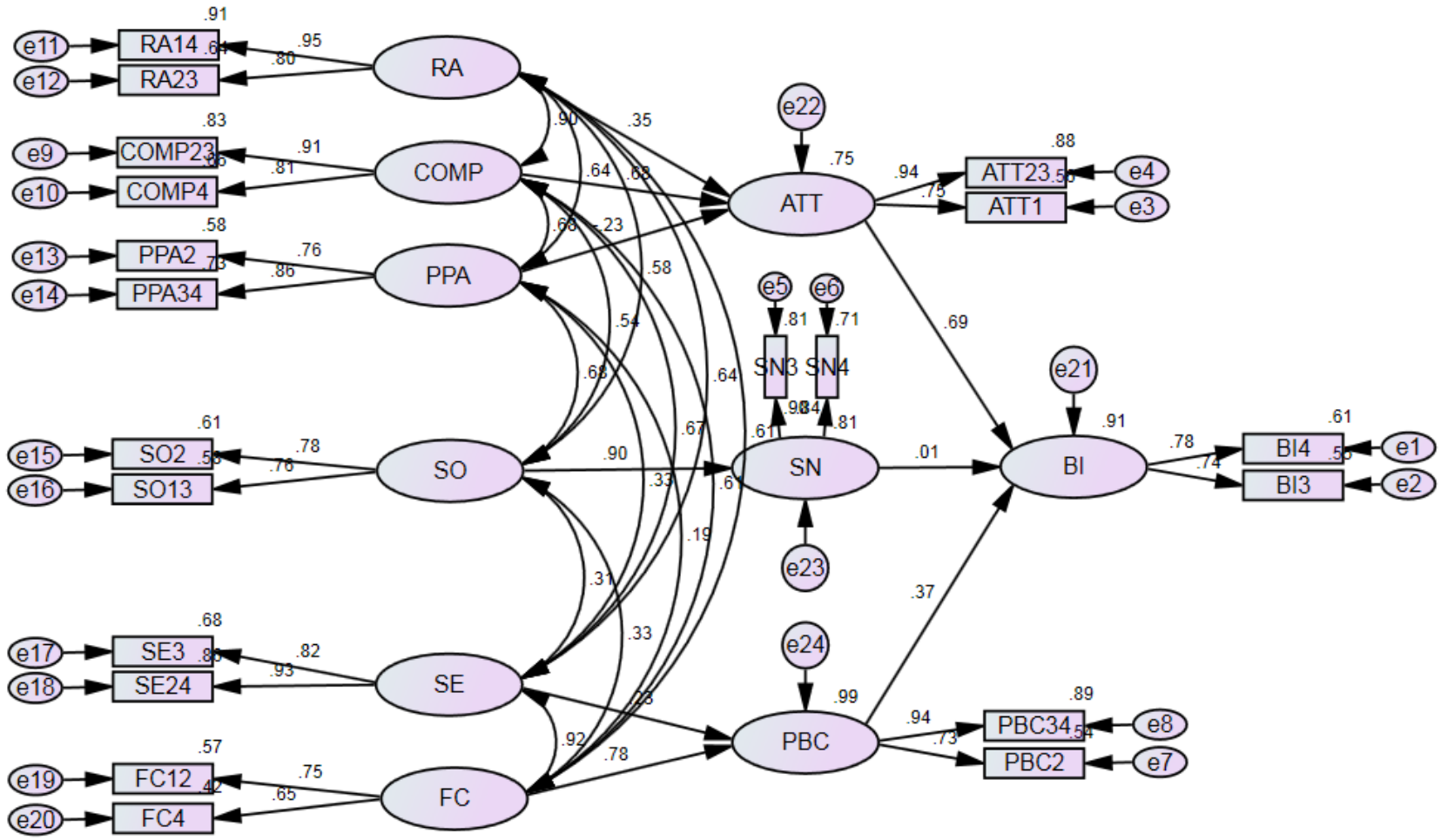

Figure 13: Structural Model – Amos Output

(Note – Standardised regression weights quoted)

Amos Output

Notes for Model (Default model)
Computation of degrees of freedom (Default model)
Number of distinct sample moments : 210
Number of distinct parameters to be estimated : 64
Degrees of freedom (210 - 64) : 146
Result (Default model)
Minimum was achieved
Chi-square : 278.364
Degrees of freedom : 146
Probability level : .000

Regression Weights: (Group number 1 - Default model)

			Estimate	S.E.	C.R.	P	Label
PBC	<---	SE	.179	.157	1.143	.253	par_24
PBC	<---	FC	.922	.256	3.600	***	par_25
SN	<---	SO	.956	.083	11.549	***	par_26
ATT	<---	RA	.230	.099	2.312	.021	par_27
ATT	<---	COMP	.423	.106	4.007	***	par_28
ATT	<---	PPA	-.119	.037	-3.222	.001	par_29
BI	<---	ATT	.841	.099	8.488	***	par_30
BI	<---	SN	.004	.033	.127	.899	par_31
BI	<---	PBC	.508	.093	5.459	***	par_32
SN4	<---	SN	1.000				
PBC2	<---	PBC	1.000				
SN3	<---	SN	1.061	.066	16.008	***	par_1
ATT1	<---	ATT	1.000				
BI3	<---	BI	1.000				
BI4	<---	BI	.824	.067	12.309	***	par_2
ATT23	<---	ATT	1.181	.080	14.824	***	par_3
PBC34	<---	PBC	1.196	.079	15.182	***	par_4
COMP23	<---	COMP	1.000				
COMP4	<---	COMP	1.006	.058	17.442	***	par_5
RA14	<---	RA	1.000				
RA23	<---	RA	1.114	.064	17.516	***	par_6
PPA2	<---	PPA	1.000				
SO2	<---	SO	1.000				
SO13	<---	SO	.902	.075	12.070	***	par_7
SE3	<---	SE	1.110	.060	18.584	***	par_8
SE24	<---	SE	1.000				
FC12	<---	FC	1.000				
PPA34	<---	PPA	1.067	.088	12.138	***	par_33
FC4	<---	FC	1.415	.135	10.475	***	par_34

Standardized Regression Weights: (Group number 1 - Default model)

			Estimate
PBC	<---	SE	.229
PBC	<---	FC	.781
SN	<---	SO	.902
ATT	<---	RA	.351
ATT	<---	COMP	.679
ATT	<---	PPA	-.233
BI	<---	ATT	.686
BI	<---	SN	.007
BI	<---	PBC	.366
SN4	<---	SN	.840
PBC2	<---	PBC	.732
SN3	<---	SN	.901
ATT1	<---	ATT	.747
BI3	<---	BI	.741
BI4	<---	BI	.781
ATT23	<---	ATT	.939
PBC34	<---	PBC	.942
COMP23	<---	COMP	.910
COMP4	<---	COMP	.813
RA14	<---	RA	.951
RA23	<---	RA	.799
PPA2	<---	PPA	.764
SO2	<---	SO	.781
SO13	<---	SO	.763
SE3	<---	SE	.824
SE24	<---	SE	.930
FC12	<---	FC	.752
PPA34	<---	PPA	.855
FC4	<---	FC	.648

Correlations: (Group number 1 - Default model)

			Estimate
COMP	<-->	RA	.899
COMP	<-->	PPA	.681
COMP	<-->	SO	.542
COMP	<-->	SE	.668
COMP	<-->	FC	.613
RA	<-->	PPA	.638
RA	<-->	SO	.577
RA	<-->	SE	.636
RA	<-->	FC	.606
PPA	<-->	SO	.681
PPA	<-->	SE	.327
PPA	<-->	FC	.189
SO	<-->	SE	.312
SO	<-->	FC	.332
SE	<-->	FC	.917

Modification Indices - Covariances (Group number 1 - Default model)

			M.I.	Par Change
e22	<-->	FC	13.761	.034
e24	<-->	e22	7.919	.024
e23	<-->	SO	4.019	-.125
e23	<-->	RA	7.965	.105
e17	<-->	e22	8.450	-.053
e17	<-->	e14	5.033	.104
e16	<-->	PPA	4.576	.156
e16	<-->	e23	6.471	-.161
e16	<-->	e14	10.060	.249
e15	<-->	SO	7.156	.207
e15	<-->	e14	8.477	-.244
e15	<-->	e16	7.112	.208
e13	<-->	e22	4.021	.073
e12	<-->	e14	4.094	.138
e10	<-->	FC	5.201	-.040
e10	<-->	SE	5.872	.063
e10	<-->	e24	5.309	-.037
e10	<-->	e23	5.399	.124
e8	<-->	e20	5.122	-.044
e4	<-->	FC	7.151	.025
e4	<-->	SE	7.682	-.038

			M.I.	Par Change
e4	<-->	e24	5.035	.019
e4	<-->	e17	6.496	-.048
e1	<-->	e22	5.171	.039
e1	<-->	e4	6.229	.043
e2	<-->	e23	4.729	.110
e2	<-->	e4	6.826	-.062
e3	<-->	e2	10.585	.111
e5	<-->	e16	4.156	-.130
e7	<-->	SE	8.729	-.052
e7	<-->	COMP	8.575	.070
e7	<-->	e22	5.407	.039
e7	<-->	e20	5.018	.074
e7	<-->	e17	9.792	-.075
e7	<-->	e4	5.188	.039
e7	<-->	e5	4.281	.073
e6	<-->	e2	5.303	.123
e6	<-->	e3	4.200	.086

Squared Multiple Correlations: (Group number 1 - Default model)

	Estimate
ATT	.747
PBC	.990
SN	.813
BI	.907
FC4	.420
PPA34	.731
FC12	.566
SE24	.865
SE3	.679
SO13	.583
SO2	.609
PPA2	.583
RA23	.639
RA14	.905
COMP4	.661
COMP23	.829
PBC34	.888
ATT23	.881
BI4	.610
BI3	.549
ATT1	.558

	Estimate
SN3	.813
PBC2	.536
SN4	.705

Standardized Direct Effects (Group number 1 - Default model)

	FC	SE	SO	PPA	RA	COMP	ATT	PBC	SN	BI
ATT	.000	.000	.000	-.233	.351	.679	.000	.000	.000	.000
PBC	.781	.229	.000	.000	.000	.000	.000	.000	.000	.000
SN	.000	.000	.902	.000	.000	.000	.000	.000	.000	.000
BI	.000	.000	.000	.000	.000	.000	.686	.366	.007	.000
FC4	.648	.000	.000	.000	.000	.000	.000	.000	.000	.000
PPA34	.000	.000	.000	.855	.000	.000	.000	.000	.000	.000
FC12	.752	.000	.000	.000	.000	.000	.000	.000	.000	.000
SE24	.000	.930	.000	.000	.000	.000	.000	.000	.000	.000
SE3	.000	.824	.000	.000	.000	.000	.000	.000	.000	.000
SO13	.000	.000	.763	.000	.000	.000	.000	.000	.000	.000
SO2	.000	.000	.781	.000	.000	.000	.000	.000	.000	.000
PPA2	.000	.000	.000	.764	.000	.000	.000	.000	.000	.000
RA23	.000	.000	.000	.000	.799	.000	.000	.000	.000	.000
RA14	.000	.000	.000	.000	.951	.000	.000	.000	.000	.000
COMP4	.000	.000	.000	.000	.000	.813	.000	.000	.000	.000
COMP23	.000	.000	.000	.000	.000	.910	.000	.000	.000	.000
PBC34	.000	.000	.000	.000	.000	.000	.000	.942	.000	.000
ATT23	.000	.000	.000	.000	.000	.000	.939	.000	.000	.000
BI4	.000	.000	.000	.000	.000	.000	.000	.000	.000	.781
BI3	.000	.000	.000	.000	.000	.000	.000	.000	.000	.741
ATT1	.000	.000	.000	.000	.000	.000	.747	.000	.000	.000
SN3	.000	.000	.000	.000	.000	.000	.000	.000	.901	.000
PBC2	.000	.000	.000	.000	.000	.000	.000	.732	.000	.000
SN4	.000	.000	.000	.000	.000	.000	.000	.000	.840	.000

Standardized Indirect Effects (Group number 1 - Default model)

	FC	SE	SO	PPA	RA	COMP	ATT	PBC	SN	BI
ATT	.000	.000	.000	.000	.000	.000	.000	.000	.000	.000
PBC	.000	.000	.000	.000	.000	.000	.000	.000	.000	.000
SN	.000	.000	.000	.000	.000	.000	.000	.000	.000	.000
BI	.286	.084	.006	-.160	.241	.466	.000	.000	.000	.000
FC4	.000	.000	.000	.000	.000	.000	.000	.000	.000	.000
PPA34	.000	.000	.000	.000	.000	.000	.000	.000	.000	.000
FC12	.000	.000	.000	.000	.000	.000	.000	.000	.000	.000
SE24	.000	.000	.000	.000	.000	.000	.000	.000	.000	.000
SE3	.000	.000	.000	.000	.000	.000	.000	.000	.000	.000
SO13	.000	.000	.000	.000	.000	.000	.000	.000	.000	.000
SO2	.000	.000	.000	.000	.000	.000	.000	.000	.000	.000
PPA2	.000	.000	.000	.000	.000	.000	.000	.000	.000	.000
RA23	.000	.000	.000	.000	.000	.000	.000	.000	.000	.000
RA14	.000	.000	.000	.000	.000	.000	.000	.000	.000	.000
COMP4	.000	.000	.000	.000	.000	.000	.000	.000	.000	.000
COMP23	.000	.000	.000	.000	.000	.000	.000	.000	.000	.000
PBC34	.736	.215	.000	.000	.000	.000	.000	.000	.000	.000
ATT23	.000	.000	.000	-.219	.329	.637	.000	.000	.000	.000
BI4	.223	.065	.005	-.125	.188	.364	.536	.286	.005	.000
BI3	.212	.062	.004	-.118	.178	.345	.508	.271	.005	.000
ATT1	.000	.000	.000	-.174	.262	.507	.000	.000	.000	.000
SN3	.000	.000	.813	.000	.000	.000	.000	.000	.000	.000
PBC2	.572	.167	.000	.000	.000	.000	.000	.000	.000	.000
SN4	.000	.000	.757	.000	.000	.000	.000	.000	.000	.000

Standardized Total Effects (Group number 1 - Default model)

	FC	SE	SO	PPA	RA	COMP	ATT	PBC	SN	BI
ATT	.000	.000	.000	-.233	.351	.679	.000	.000	.000	.000
PBC	.781	.229	.000	.000	.000	.000	.000	.000	.000	.000
SN	.000	.000	.902	.000	.000	.000	.000	.000	.000	.000
BI	.286	.084	.006	-.160	.241	.466	.686	.366	.007	.000
FC4	.648	.000	.000	.000	.000	.000	.000	.000	.000	.000
PPA34	.000	.000	.000	.855	.000	.000	.000	.000	.000	.000
FC12	.752	.000	.000	.000	.000	.000	.000	.000	.000	.000
SE24	.000	.930	.000	.000	.000	.000	.000	.000	.000	.000
SE3	.000	.824	.000	.000	.000	.000	.000	.000	.000	.000
SO13	.000	.000	.763	.000	.000	.000	.000	.000	.000	.000
SO2	.000	.000	.781	.000	.000	.000	.000	.000	.000	.000
PPA2	.000	.000	.000	.764	.000	.000	.000	.000	.000	.000
RA23	.000	.000	.000	.000	.799	.000	.000	.000	.000	.000
RA14	.000	.000	.000	.000	.951	.000	.000	.000	.000	.000
COMP4	.000	.000	.000	.000	.000	.813	.000	.000	.000	.000
COMP23	.000	.000	.000	.000	.000	.910	.000	.000	.000	.000
PBC34	.736	.215	.000	.000	.000	.000	.000	.942	.000	.000
ATT23	.000	.000	.000	-.219	.329	.637	.939	.000	.000	.000
BI4	.223	.065	.005	-.125	.188	.364	.536	.286	.005	.781
BI3	.212	.062	.004	-.118	.178	.345	.508	.271	.005	.741
ATT1	.000	.000	.000	-.174	.262	.507	.747	.000	.000	.000
SN3	.000	.000	.813	.000	.000	.000	.000	.000	.901	.000
PBC2	.572	.167	.000	.000	.000	.000	.000	.732	.000	.000
SN4	.000	.000	.757	.000	.000	.000	.000	.000	.840	.000

Structural Model - Fit Analysis

CMIN

Model	NPAR	CMIN	DF	P	CMIN/DF
Default model	64	278.364	146	.000	1.907
Saturated model	210	.000	0		
Independence model	20	3855.524	190	.000	20.292

RMR, GFI

Model	RMR	GFI	AGFI	PGFI
Default model	.090	.907	.866	.631
Saturated model	.000	1.000		
Independence model	.676	.204	.121	.185

Baseline Comparisons

Model	NFI Delta1	RFI rho1	IFI Delta2	TLI rho2	CFI
Default model	.928	.906	.964	.953	.964
Saturated model	1.000		1.000		1.000
Independence model	.000	.000	.000	.000	.000

RMSEA

Model	RMSEA	LO 90	HI 90	PCLOSE
Default model	.059	.049	.070	.075
Independence model	.273	.266	.281	.000