

https://dspace.org/

Structural, economic and material comparison of various steel grades under fatigue loading

Amobi, Ikechukwu Ugochukwu

2008-03-28T09:49:56Z
http://hdl.handle.net/10539/4714

Downloaded from a DSpace repository. https://dspace.org/

CHAPTER THREE

This chapter explains the test equipment, test procedure and the material determination. Several tools and equipment were used in the experiment to determine the fatigue failure of the various steel grades. The test that was carried out was a fatigue one, so these machines were calibrated for the best result.

3.1 TEST EQUIPMENT

The following testing equipment was used in the experiment:

3.1.1 MTS Test System

The MTS test system is designed for a wide variety of structural and vibration testing applications. The test system consists of a MicroConsole and its associated AC and/or DC controllers, an oscilloscope (in the form of an LVDT) which is explained later, one or more hydraulic actuators, hydraulic service manifold (HSM) and a hydraulic power supply (HPS).

In operation of the test system, the MicroConsole and associated electronic products control the servo hydraulics devices. The servo hydraulic devices use hydraulic pressure, supplied and regulated by the HSM and HPS, to apply forces, displacements and/or strain to the specimen.

3.1.1.1 MicroConsole

The MicroConsole chassis which is an electronic device houses the electronics for closed-up control of a single test. In specific, it contains controls and indicators necessary for system operation, such as a cycle counter, digital display, hydraulic pressure, program run/stop, emergency stop, and interlocks controls. It can also hold up to single-width, plug-in displays.



Figure 3.1 – MicroConsole

3.1.1.2 Hydraulic Actuator

The actuator is the force-generating and/or positioning device in the system. Hydraulic fluid is applied to either side of the actuator's piston to cause its piston rod to extend or retract.



Figure 3.2 – Hydraulic Actuator

3.1.1.3 Hydraulic Service Manifold

This filters and distributes fluid to the servo valves. Its pressure and return accumulators help to minimize fluctuations in the hydraulic fluid pressure. An HSM provides either on/off, or on/off and low/high pressure control.

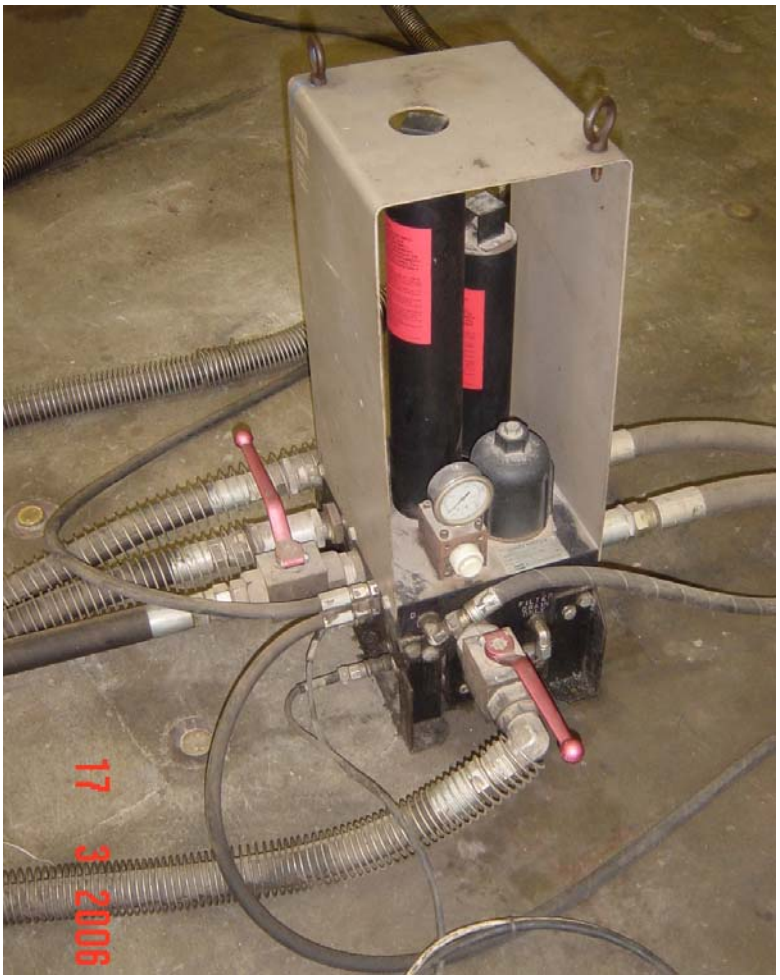

Figure 3.3 – Hydraulic Service Manifold

3.1.1.4 Hydraulic Power Supply

The hydraulic power supply (HPS) provides pressurized hydraulic fluid to the servo valve or hydraulic service manifold. An HPS typically includes a reservoir for the hydraulic fluid, a pump to pressurize the hydraulic fluid, a motor to run the pump, a heat exchanger to cool the hydraulic fluid, and sensors to monitor the level and temperature of the hydraulic fluid.



Figure 3.4 – Hydraulic Power Supply

3.1.2 Power Supply

The complete range of power supplies is very broad, and could be considered to include all forms of energy conversion from one form into another. Conventionally though, the term is usually confined to electrical or mechanical energy supplies as applied to this project.

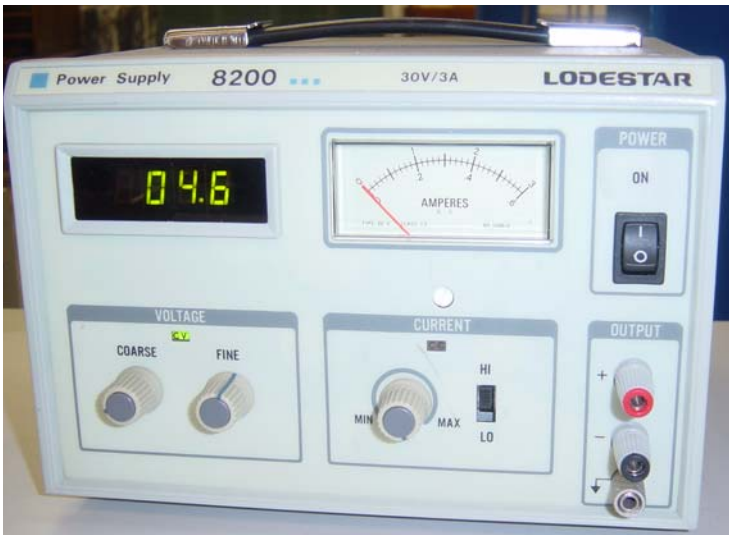

Figure 3.7 – Power supply

3.1.3 Strain gauge

A strain gage (alternatively: strain gauge) is a device used to measure deformation (strain) of an object. Invented by Edward Simmons in 1938,

the most common type of strain gage consists of a flexible backing which supports a metallic foil pattern etched onto the backing. As the object is deformed, the foil pattern is deformed, causing its electrical resistance to change due to the piezoresistive effect. This resistance change, usually measured using a Wheatstone bridge circuit, can be used to calculate the exact amount of deformation by means of the quantity known as the gage factor.

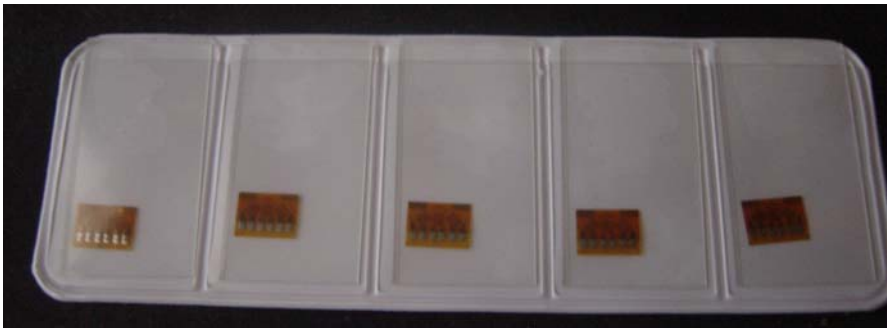

Figure 3.8 – A set of Strain gauges

3.1.4 Strain gauge reader

This is an electrically powered instrument which the strain gauges are connected to using wires and they produce microstrain results.



Figure 3.9 – Strain gauge reader

3.2 TEST PROCEDURE

The setup was done in such a way that a constant force was maintained throughout each experiment and the strain measurements were periodically taken. The setup is described as follows:

A 100 mm LVDT which was firmly fixed to the specimen was connected serially to both the DC voltage power supply and the memory card of an 'Agilent' Data Logger (see figure below) in order that voltage output can be measured during testing.



Figure 3.10 – Connecting wire to a module

The data logger was then connected to a computer which has the Agilent programme installed in order that the measurements can be adjusted and stored appropriately.

Although the setup was not based on maximum deflection method but rather on force method, the LVDT was firmly fixed at midspan directly under the point of load application. This enables us to ascertain the behaviour of the various specimens under specific loadings.

Strain gauges were precisely glued at various sensitive places on the specimen with the aid of cement paste. Wires were then soldered on these strain gauges and eventually connected to the strain gauge reader (as shown below).



Figure 3.12 – Connecting wires to strain gauge reader

Lack of stability of the specimen could influence its behaviour under loading; as a result, the specimens were firmly braced laterally near the supports as shown below.



Figure 3.13 – Bracing of the specimen

This was achieved by welding 4-point steel close enough to the web of the specimen and padding it with cartons to avoid excessive pressure on the web.

Carton padding was also placed on top of the specimen directly above the point of load application in order to distribute the load evenly.

Since the actuator measures its capacity in percentages, a load calibrator was used to convert the load percentage to actual readable loading quantities.

3.3 MATERIAL PROPERTIES OF SPECIMEN

3.3.1 Specimen Properties

The specimens were cut from a 10000 x 2400 x 16 mm flat edge square. The chemical property of the section is given below:

Table 3.1 – Chemical analysis

	300W	350W	460W
C %	0.18	0.20	0.08
Mn %	1.05	1.01	1.15
P %	0.029	0.025	0.015
S %	0.008	0.005	0.006
Si %	0.200	0.34	0.18
Al %	0.003	0.05	0.03
Nb %	0.003	0.03	0.033
Cr %	0.040	-	-
Cu %	0.014	-	-
Ni %	0.011	-	-
Mo %	0.004	-	-
V %	0.007	0.005	0.004
Ti %	0.001	-	-

Below is a description of the various chemical elements used in the production of the specimens:

a. Carbon:

Carbon is a diamagnetic tetravalent nonmetal. Carbon is added in great quantity to iron to make steel. Carbon is the primary alloying material for steel. Carbon acts as a hardening agent, preventing iron atoms, which are naturally arranged in a crystal lattice, from sliding past one another (dislocation). Varying the amount of carbon and its distribution in the alloy controls qualities such as the hardness, elasticity, ductility and tensile strength of the resulting steel. Steel with increased carbon content can be made harder and stronger than iron, but is also more brittle. As carbon content rises the metal becomes harder and stronger but less ductile. The carbon composition of a mild steel (low carbon) is 0.05% to 0.26%. 460W in this case is considered as a HSLA (High strength low alloy) steel because of its very small percentage of carbon.

b. Magnesium:

This is also an alkaline earth metal which is primarily used as an alloying agent in the making of iron alloys. It has a Young's modulus of 45 GPa, shear modulus of 17 GPa, bulk modulus of 45 GPa and it's Brinell Hardness is 260 MPa. At room temperature, its thermal expansion is 24.8 µm/(m.K). Magnesium is the third most commonly used structural metal, following steel and aluminum. Magnesium, in its purest form, can be compared to aluminium, and is strong and light, so it is used in several high volume part manufacturing applications, including structural steel. It improves the mechanical, fabrication and welding characteristics of structural steels. It also imparts hardenability and scavenges for sulphur. Most often, structural steels contain only an approximate of 1% of this metal due to its high cost. The magnesium content in the 460W specimen was higher than that of 300W and 350W steel grades.

c. Phosphorus:

Phosphorus is an important multivalent nonmetal of the nitrogen group with a bulk modulus of 11 GPa used in the making of steel because of its high reactivity with aother alloying elements.

d. Sulfur:

This is also a multivalent nonmetal with a bulk modulus of 7.7 GPa and light in nature. Because of the sulphur ozide and pungent smell produced during the process of melting sulfur, a little amount of it is used in the production of structural steel. The sulpher content for the three specimens were approximately the same and added at a low percentage.

e. Silicon:

Silicon is a less reactive nonmagnetic tetravalent metalloid than its chemical analog carbon having a Young's modulus of 47 GPa, a bulk modulus of 100 GPa and a thermal expansion of 2.6 µm/(m.K) at room temperature. Pure silicon (metallurgical grade silicon) is used in largely

production in steel - silicon alloys, often called "light alloys". It is introduced as ferro-silicon or silico-calcium alloys.

f. Aluminium:

Aluminum is a silvery and ductile member of the poor metal group of chemical elements having a Young's modulus of 70 GPa, shear modulus of 26 GPa, bulk modulus of 76 GPa, Brinell hardness of 245 MPa and a thermal expansion of 23.1 µm/(m.K) at room temperature. Aluminium is a soft and lightweight metal with a dull silvery appearance, due to a thin layer of oxidation that forms quickly when it is exposed to air. Pure aluminium has a low tensile strength of about 49 MPa, but when formed into an alloy its tensile strength increases up to 400 MPa. Due to its readiness to form alloys with many elements such as copper, zinc, magnesium manganese and silicon it has become an alloying element in the production of steel. Higher aluminium content was added to 350W and 460W steel grades as compared to the 300W grade apparently to increase their ductility as their hardness is increased.

g. Niobium:

Niobium is a ductile transition metal with Young's modulus 105 GPa, shear modulus 38 GPa, bulk modulus 170 GPa, Brinell hardness 736 MPa and a thermal expansion of 7.3 µm/(m.K) at room temperature. Due to its weldability, ductility and mechanical properties it is widely used as an alloying agent in the production of steel. It imparts resistance to softening. Its content was approximately consistent with all the specimens.

h. Chromium:

This has a Young's modulus of 279 GPa, shear modulus of 115 GPa, bulk modulus of 160 GPa, Brinell hardness of 1120 MPa and low thermal expansion of 4.9 µm/(m.K) at room temperature. Because of its high mechanical properties and anti-corrosiveness it is used as an alloy constituent in steel production. It impacts hardenability and imparts some resistance to softening at elevated temperatures. Unfortunately,

only the percentage for 300W was made available from the material specification.

i. Copper:

Copper which is a diamagnetic transition metal is malleable and ductile with high thermal and electrical conductivity. It's Young's modolus is 130 MPa, shear modulus is 48 GPa, bulk modolus is 140 GPa, Brinell hardness is 874 MPa and thermal expansion of 16.5 µm/(m.K) at room temperature. Because of its high malleability and ductility, it is alloyed with other elements in the production of structural steel. Unfortunately, only the percentage quantity for 300W was made available from the material specification.

j. Nickel:

Nickel which is also a transition metal having a Young's modulus of 200 GPa, shear modulus of 76 GPa, bulk modulus of 180 GPa, Brinell hardness of 700 MPa and thermal expansion of 13.4 µm/(m.K) at room temperature. Because of its high hardness, malleability and ductility it is used as an alloying constituent in the production of structural steel. It raises inherent resistance of steel to brittle fracture. Unfortunately, only the percentage quantity for 300W was made available from the material specification.

k. Molybdenum:

This has a Young's modulus of 329 GPa, a shear modulus of 20 GPa, a bulk modulus of 230 GPa, a Brinell hardness of 1500 MPa and a thermal expansion of 4.8 µm/(m.K) at room temperature. In small quantities, molybdenum is effective at hardening steel. It is used in high-strength alloys and in high-temperature steels. Special molybdenum-containing alloys, such as the Hastelloys, are used notably for heat-resistant and corrosion-resistant steels. It impacts hardenability. Unfortunately, only the percentage quantity for 300W was made available from the material specification.

l. Vanadium:

Vanadium is a soft and ductile transition metal with thermal expansion 8.4 µm/(m.K) at room temperature, Young's modulus of 128 GPa, shear modulus of 47 GPa, bulk modulus of 160 GPa and a Brinell hardness of 628 MPa. Due to its mechanical properties it is used as alloys extensively in steel making. It is also an important carbide stabilizer. It imparts resistance to softening and also aids in grain refinement. The values of the element present were approximately consistent in low quantities for all the specimens.

m. Titanium:

It is a light, strong, lustrous, corrosion-resistant (including resistance to sea-water and chlorine) transition metal with Youngs modulus of 116 GPa, shear modulus of 44 GPa, bulk modulus of 110 GPa, Brinell hardness of 716 MPa and thermal expansion of 8.6 µm/(m.K) at room temperature. Because of its very high tensile strength (even at high temperatures), light weight, extraordinary corrosion resistance, and ability to withstand extreme temperatures, titanium alloys are principally used in strong light-weight alloys for steel making. It is also used in steel alloys to reduce grain size. 20% of the titatnium in the world market is produced in South Africa. Unfortunately, only the percentage quantity for 300W was made available from the material specification.

The mechanical property of the specimen is also given below:

Table 3.2 – Mechanical properties

		300W	350W	460W
ReH MPa		320	385	485
Rm MPa	Ave	511	564	582
	Min	505		
	Max	518		
	Std Dev			
A %		26	22	18
ReH: Yield Stress Rm: Tensile Strength A: Elongation				

As the hardness of steel grades were increasing, its percentage elongation were reducing considerable, this might be due to increase in chemical properties like Chromium, Molybdenum, and other elements which has very high Brinell hardness of over 1000 MPa.

3.4 SPECIMEN SECTION DETERMINATION

Since various steel grades will be tested under the same conditions, the load capacity of these steel grades should be equal. To achieve this, an initial I-section of the 300W grade was assumed and its load capacity determined. The load capacity was imposed on the other sections, 350W and 460W, and their different sections determined. This procedure is shown mathematically below.

Initial 300W grade section:

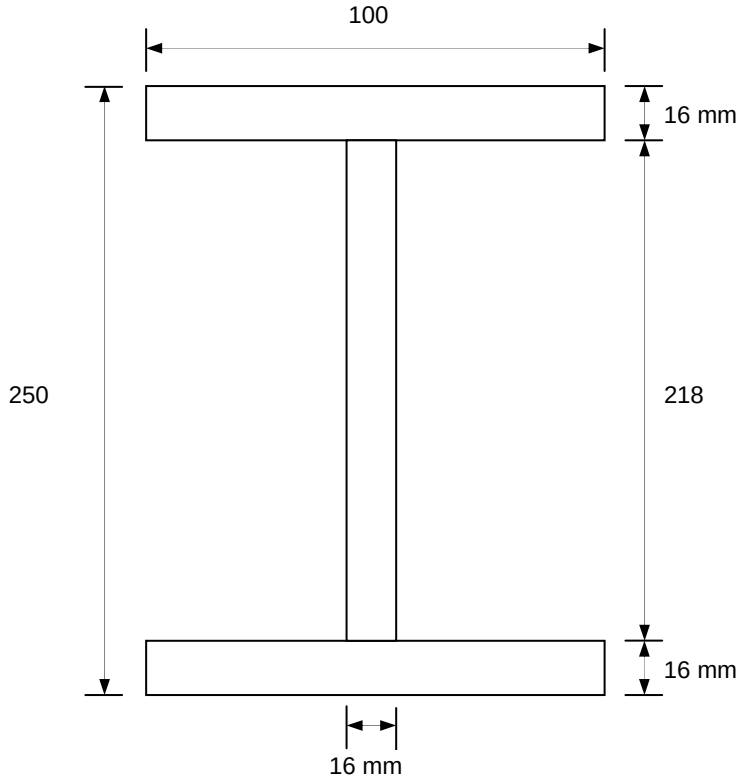

Figure 3.14 – 300W Section

$$Z_{pl} = \left[\frac{100xd^2}{4}\right] - 2\left[\frac{42x(d-32)^2}{4}\right]$$

$$(d-32)^2 = (d-32)(d-32) = d^2 - 64d + 1024$$

$$Z_{pl} = \left[\frac{100xd^2}{4}\right] - \left[\frac{84x(d^2 - 64d + 1024)}{4}\right]$$

$$Z_{pl} = \left[\frac{100d^2}{4}\right] - \left[\frac{84d^2 - 5376d + 86016}{4}\right]$$

$$Z_{pl} = \left[\frac{100d^2 - 84d^2 + 5376d - 86016}{4}\right]$$

$$Z_{pl} = 4d^2 + 1344d - 21504$$

d = 250 mm

$$\therefore Z_{pl} = 4(250)^2 + 1344(250) - 21504$$

$$Z_{pl} = 565x10^3 mm^3$$

$$M_p = 0.9xZ_{pl}xf_y$$

f_y = 300N/mm^2

$$M_p = 0.9x565x10^3 x300$$

$$M_p = 153KNm$$

The moment capacity is now imposed on 350W and 450W steel grades as follows:

For 350W Steel grade:

$$M_p = 0.9xZ_{pl}xf_y$$

f_y = 350N/mm^2

$$153x10^6 = 0.9xZ_{pl}x350$$

$$Z_{pl} = 484x10^3 mm^3$$

$$Z_{pl} = \left[\frac{100xd^2}{4}\right] - 2\left[\frac{42x(d-32)^2}{4}\right]$$

$$Z_{pl} = 4d^2 + 1344d - 21504$$

$$484x10^3 = 4d^2 + 1344d - 21504$$

$$\therefore d = 225mm$$

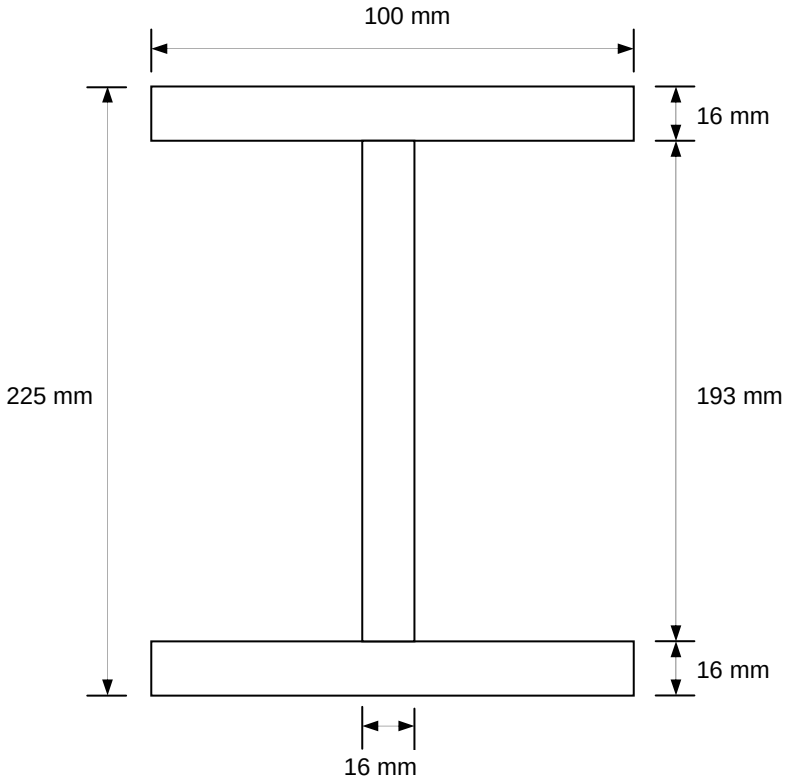

Figure 3.15 – 350W Section

For 460W Steel grade:

$M_p = 0.9xZ_{pl}xf_y$

$f_y = 460N/mm^2$

$153x10^6 = 0.9xZ_{pl}x460$

$Z_{pl} = 371x10^3 mm^3$

$$Z_{pl} = \left[\frac{100xd^2}{4}\right] - 2\left[\frac{42x(d-32)^2}{4}\right]$$

$Z_{pl} = 4d^2 + 1344d - 21504$

$371x10^3 = 4d^2 + 1344d - 21504$

$\therefore d = 187mm$

.

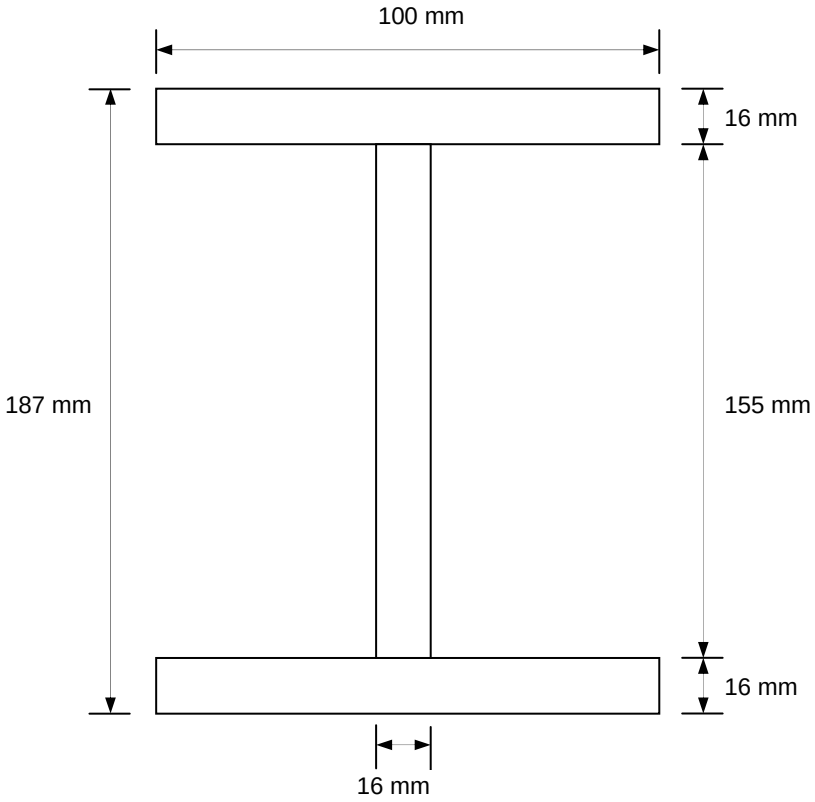

Figure 3.16 – 460W Section