

https://dspace.org/

The modelling and optimisation of aggregate plants, and the use of the Apollo Computer Program

Hayden, John Samuel

2015-01-26
http://hdl.handle.net/10539/16746

Downloaded from a DSpace repository. https://dspace.org/

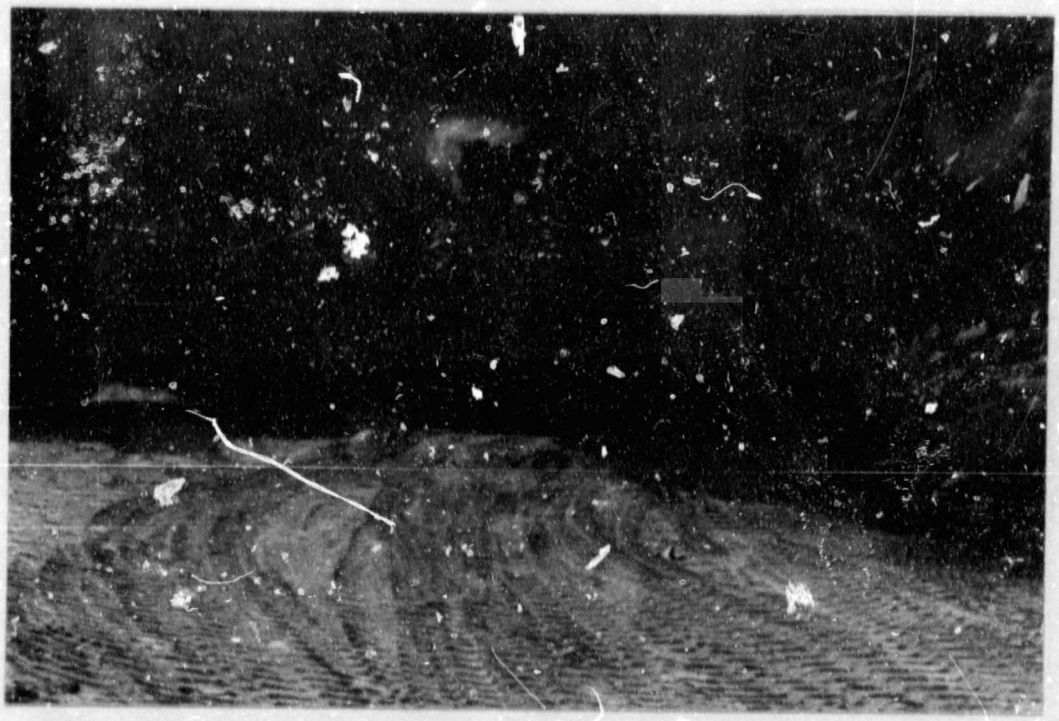

Above: The blasted rock is loaded onto 35 ton trucks using a front end loader and is hauled out of the quarry to the primary crusher

Below: View from above into the jaws of the 30"x42" primary crusher. The ends of the scalping bars, which separate the fines out of the feed to the crusher, are visible







Above: After primary crushing, the broken rock is conveyed to the primary stockpile. This stockpile serves to decouple the quarry and primary crusher from the rest of the plant

Below: The 4¼ Standard secondary-crusher installation and the feed chute to the crusher



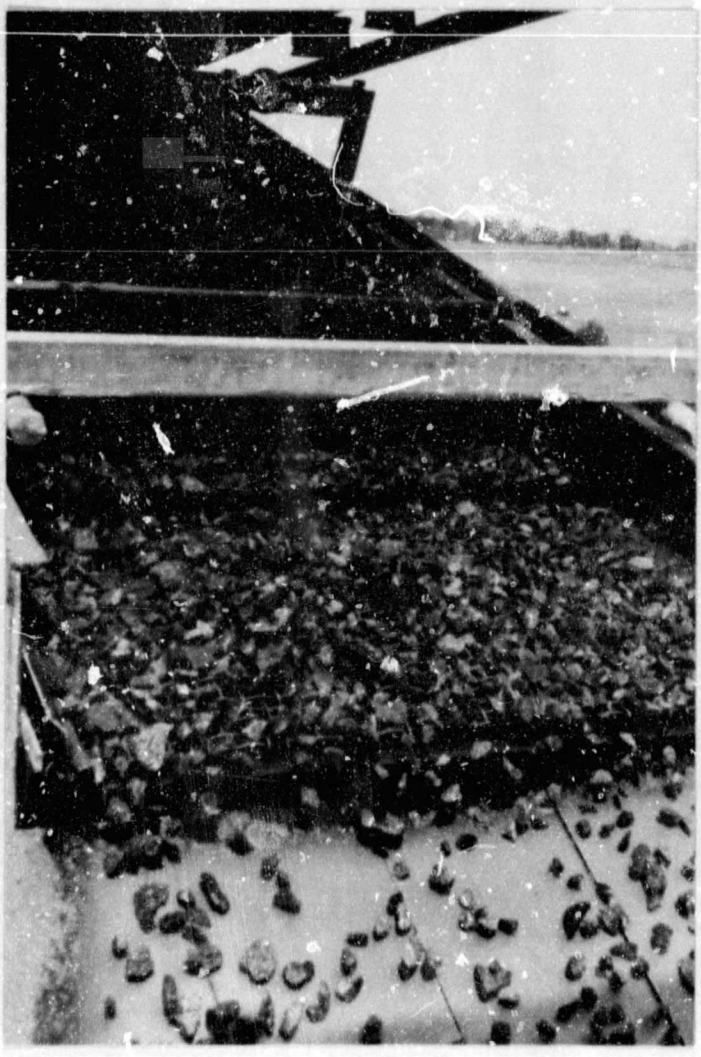

Above: General view of part of the processing plant, with the secondary crusher installation on the left side of the building. The stockpile in the foreground is sand; the one behind the building is a continuous-grade product called crusher run

Below: A typical vibrating screen. Washing sprays are visible to the rear of the screen

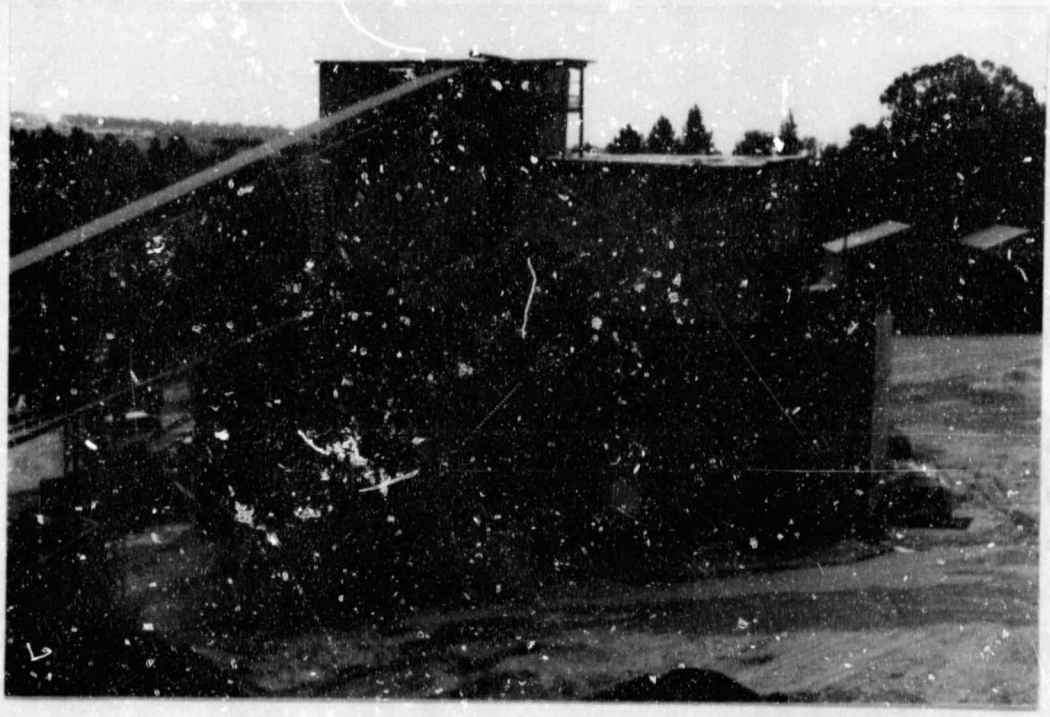

Above: General view of the final-product screen-house and silos (The blue concrete structure is a series of individual silos - the vertical lines on the structure indicate the partitioning)

Below: Outloading of final product from silos into a delivery vehicle



CHAPTER 2

FUNDAMENTALS OF AGGREGATE PROCESS MODELLING

For almost a century, the process of size reduction was studied in terms of the energy consumed during the operation of a grinding mill. This was a logical starting point, because size reduction is responsible for a large proportion of the costs of aggregate processing. The direction of investigations was thus influenced more by economics than by any other factor (Lynch, 1977).

A more recent, and more useful, approach is to study the process of size reduction itself and to obtain mathematical relationships linking the pertinant variables.

Various aspects of these two approaches are discussed in this chapter.

2.1 SIZE REDUCTION AS A FUNCTION OF ENERGY CONSUMED

Early investigations were concerned with the energy consumed by a grinding mill and the amount of size reduction that the consumption of this energy brought about.

It was observed experimentally that, in a size-reduction process, the degree of fragmentation produced was proportional to the energy expended per unit mass of particles. It was also observed that the energy required to cause the same relative size change was inversely proportional to some function of the initial particle size: in other words, breaking smaller particles requires more energy. The relationship between energy and breakage may be expressed in the equation

$$dE = -K.dx/x^n \qquad (2.1)$$

where dE is the incremental energy required to cause an incremental size change dx. Various workers have given different interpretations of this relationship. Rittinger (1867) suggested that the energy consumed is proportional to the amount of new surface area produced. Kick (1885) suggested that the same relative reduction in volume is obtained for constant energy input per unit mass, regardless of original size. Both relationships may be derived from equation 2.1 by substituting 1.0 and 2.0 for n and integrating. The resulting equations are as follows:

Kick's equation: $E = K.\ln(x_1/x_2)$

Rittinger's equation: $E = K.(1/x_2 - 1/x_1)$

A third relationship, proposed by Bond (1952), is as follows:

$$E = 2.K.(1/\sqrt{x}_2 - 1/\sqrt{x}_1)$$

where x_2 is the size at which 80% of the product passes, and
x_1 is the size at which 80% of the feed passes.

Bond's equation is obtained by setting n = 1.5 in equation 2.1 and integrating. The constant in this equation was defined by Bond as the 'Work Index', which is now considered not constant but a function of particle size. Consequently, the relationship proposed by Hukki (1961) for the general form of the energy - size-reduction relationship

$$dE = -K.dx/x^{f(x)} \qquad (2.2)$$

is a better description of the dependence of the required energy on particle size than equation 2.1. Equation 2.2 indicates that the constants of proportionality in Kick's and Rittinger's equations will also vary with particle size.

Much controversy arose about the hypotheses of Kick and Rittinger years after they were published as other workers produced results satisfying either one or the other, and discussion increased when Bond published his "third theory" in 1952. Suffice to say that, in general, the proposed relationships are only valid over limited ranges of variables in specific cases. Also, it is generally agreed that the amount of energy directly associated with causing breakage of material is low in comparison with the total energy consumed by a size-reduction machine; since not enough is known about the energy balances in size-reduction processes, it is difficult to determine energy relationships with any degree of accuracy.

In conclusion, the abovementioned relationships are considered unsuitable for defining the size-reduction process. Size reduction is best seen as a result of a mechanical operation which consumes energy: size reduction is merely the indirect result of energy consumption (Lynch, 1977).

A more direct, and useful, approach is to consider the relationship between the feed to, and product from, an aggregate process. Here, as in any quantitative discussion about size reduction, the variable of major importance is **size distribution**.

2.2 REPRESENTING THE SIZE DISTRIBUTION OF BROKEN MATERIAL

The physical size distribution of particles in an aggregate sample can be determined by passing the material over a series of sieves (screens) of decreasing aperture width. The size distribution is then indicated by the proportions that are retained on each sieve, as shown in Figure 2.1.

Figure 2.1 also shows a more common representation of the size distribution, one based on the cumulative percent passing any size. This latter method conveniently allows for the size distribution to be represented by a continuous curve.

To facilitate the understanding of the factors that affect aggregate processing, and to lay the groundwork for developing models of these processes, it is necessary to consider how one can mathematically represent the size distribution of particle sizes in a material stream. Various methods of doing this are now discussed.

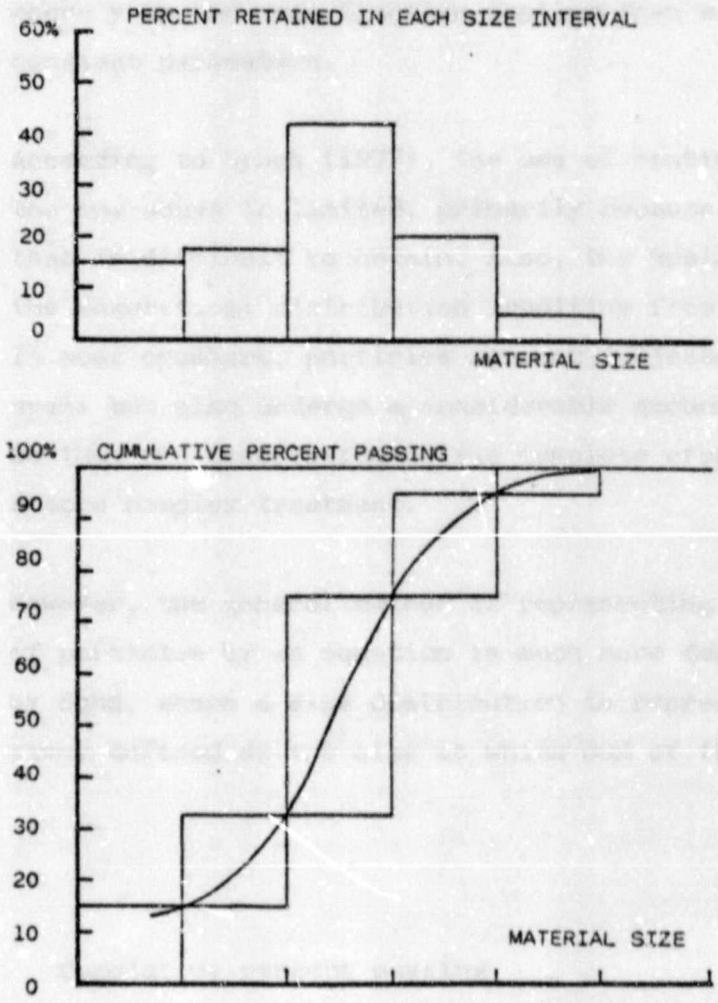

Figure 2.1 Representing the size distribution of an aggregate sample

2.2.1 Continuous Functions

The size distribution of broken rock can represented by a continuous function defining the frequency of occurrence of any size. Numerous continous functions have been postulated to describe the size distribution resulting from a crushing or grinding process and these have been dealt with fully by Fagerholt (1945). The most important of

these functions is the Rosin-Rammler (1933) equation, describing the theoretical distribution resulting from the breakage of a single particle.

$$y = 1 - \exp(-b.x^m)$$

where y is the mass fraction smaller than size x, and b and m are constant parameters.

According to Lynch (1977), the use of continuous functions such as the one above is limited, primarily because they require information that is difficult to obtain. Also, the Rosin-Rammler equation describes the theoretical distribution resulting from a single-breakage event. In most crushers, particles are not subjected to only one breakage event but also undergo a considerable amount of subsequent re-breakage, so that the description of the complete crushing process requires a more complex treatment.

However, the general method of representing the size distribution of particles by an equation is much more desirable than that used by Bond, where a size distribution is represented merely by an average size, defined as the size at which 80% of the material passes and

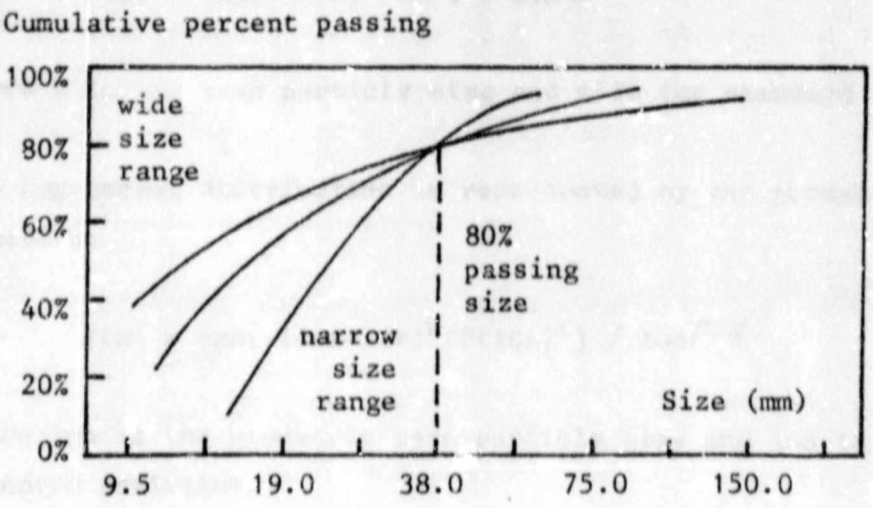

Figure 2.2 Example of a single size representing several size-distributions

20% is retained. With this definition, it is possible to represent many different size distributions by one value, and, as shown in Figure 2.2, this is wholly inadequate.

In Chapter 3, various mathematical models of the crushing process are discussed; the Rosin-Rammler equation is used, quite elegantly, in one of these models (the Whiten model).

2.2.2 Statistical Functions

Statistical functions are, according to Lynch (1977), suitable for describing only a limited number of size distributions and are inadequate for general use. Nevertheless, the author (Hayden, 1981) has developed a satisfactory model of a crusher using such functions, and this is described in Chapter 3.

The two distributions of interest are the Normal and Log-normal distributions.

The Normal distribution is represented by the probability density function f(x) which gives, in our case, the relative frequency of a particle of size x occurring in a material flow:

$$f(x) = \exp[-(x-m)^2/2s^2] \;/\; s\sqrt{2\pi} \qquad (2.3)$$

where m is the mean particle size and s is the standard deviation.

The Log-normal distribution is represented by the probability density function:

$$f(x) = \exp[-(\ln x-\ln m)^2/2(\ln s)^2] \;/\; \ln s\sqrt{2\pi} \qquad (2.4)$$

where lnm is the geometric mean particle size and lns is the geometric standard deviation.

The Log-normal distribution applies to asymetric distributions.

Using equations (2.3) or (2.4) to describe size distributions requires that they be integrated. This is only possible using numeric methods or standard tables, so that their application is not so straightforward.

2.2.3 Discontinuous Functions

Broadbent and Calcott (1956) describe a convenient method for representing the size distribution of broken materials. A continuous size distribution is defined at a set of points x_0, x_1, ..., x_n and a column vector represents the differences between consecutive points. The size distribution curve is thus approximated to a series of n straight lines between points of definition. The greater the number of such points considered, the closer the approximation to the original curve. If more than four intervals are considered, the representation has been found by Broadbent et al to be sufficiently accurate. This method is convenient since, if the points of definition correspond to sieve sizes, the result is a size analysis of the material, with the fractions retained on consecutive sieves forming the vector. The vector can represent either the mass present in each interval or the percent of total material present in each interval. An example of how such a vector is formed is shown in figure 2.3.

A useful convention is to always allow the (n)th interval to represent the residue (the fine material that passes through the smallest aperture sieve). This interval can always be calculated by subtracting the cumulative amount retained on the finest sieve from the total.

The advantages of this method are:

- no approximations are made in order to fit a continuous function
- the values can be read directly without further graphical or mathematical manipulation
- any size distribution can be represented in this manner
- the representation is very suitable for manipulation on a digital computer.

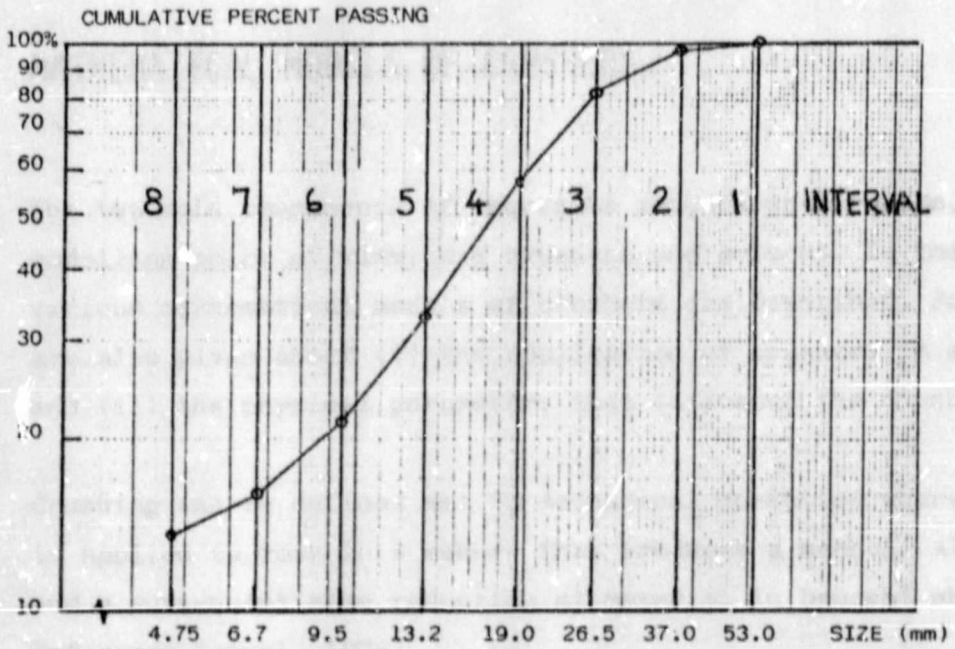

Interval	Sieve	% Retained
1	37.5mm	3.0%
2	26.5	15.0
3	19.0	25.0
4	13.2	24.0
5	9.5	11.5
6	6.7	5.5
7	4.75	2.5
8(residue)	0.0	13.5

Figure 2.3 Example of how a vector is formed to represent a size distribution

In summary: Three methods of representing the size distribution of broken material have been considered. The first two, namely, by means of continuous functions and statistical functions, have some usefulness (as will be shown in Chapter 3). The vector method, however, is the most convenient one: it is the approach that will be used in the remaining chapters.

CHAPTER 3

MATHEMATICAL MODELS OF CRUSHERS

The two main components of aggregate processing circuits, from a modelling point of view, are crushers and screens. In this chapter, various mathematical models of crushers are described. Some details are also given about (i) the application of crushers in a circuit, and (ii) the physical parameters that influence the crushing process.

Crushing can be defined as: "a mechanical operation where pressure is applied to rock in a manner that produces a mechanical failure, and a subsequent size reduction of material is brought about" (Nordberg Reference Manual, 1976).

The two major types of crushers in commercial use are compression and impact crushers. The compression type is much more common in the South African aggregate industry, being more suitable for handling the hard, abrasive rocks (such as quartzites and granites) that are usually encountered. Even with the advances in new wear-resistant alloys for use in impact crushers, these machines are still not recommended for the above-mentioned rock types.

In hard rock crushing where the major final product sizes are typically minus 53mm, a three-stage crushing plant is usually employed; when additional sand is required, a fourth stage may also be used. Table 3.1, extracted from the Nordberg Reference Manual, 1976, shows typical crusher types used, together with normal ranges of application.

The main components of two types of compression crushers, namely jaw and cone, are shown in section in Figure 3.1. In both, the crushing effect is brought about by a reciprocating motion of one surface relative to another. Another feature common to both types is that the material has to pass through a restricted outlet, which limits

the largest size of stone produced. Stones that are larger than the outlet after being crushed are re-crushed in the lower part of the crushing cavity. This results in a marked preponderance in the product of material of a size approximating the minimum width of the outlet, that is, the 'closed side setting'*. The actual setting required to produce the maximum possible proportion of a given size varies from one machine to another (Sergold, 1959).

The size distribution of the crusher product is an important variable in aggregate plant processing, and most suppliers provide information about the type of output grading that can be expected at various settings. A typical set of curves provided by a supplier is shown in Figure 3.2 (from the Telsmith handbook, 1976).

CRUSHER STAGE	CRUSHER TYPE	FEED SIZE RANGES (mm)	PRODUCT SIZE RANGE (mm)
Primary	gyratory (plant capacity over 600 t/hr)	up to 1500	150 - 300
	jaw (plant capacity up to 1000 t/hr)	up to 900	100 - 300
Secondary	"Standard" cone	100 - 400	25 - 125
Tertiary	"Short Head" cone	20 - 150	0 - 25
Fourth	"Gyradisc"	5 - 50	0 - 10

Table 3.1 Crusher types used and typical ranges of application

---

* The closed side setting, also known as the crusher 'gap' is the width of the discharge opening, measured at the moment of reciprocation when the gap is narrowest.

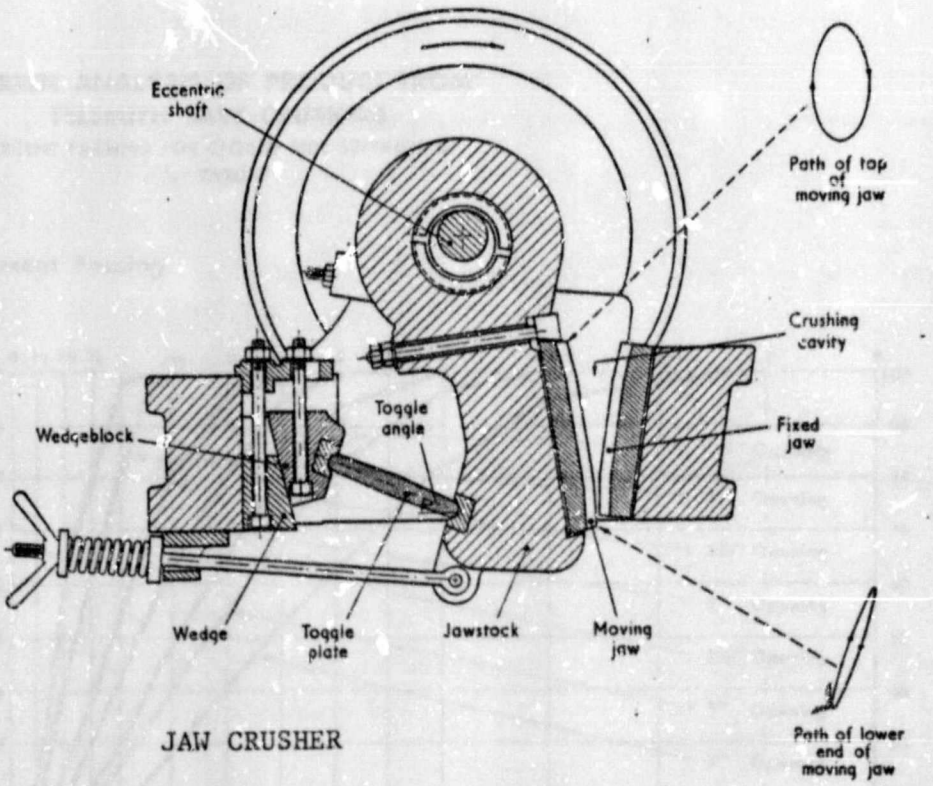

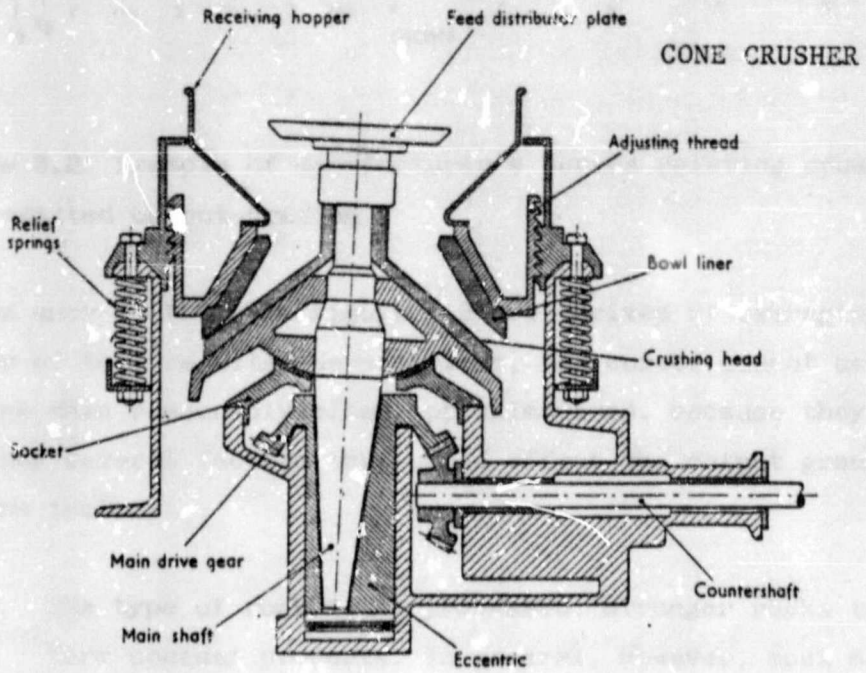

Figure 3.1 Sectional diagrams showing main components of jaw and cone crushers

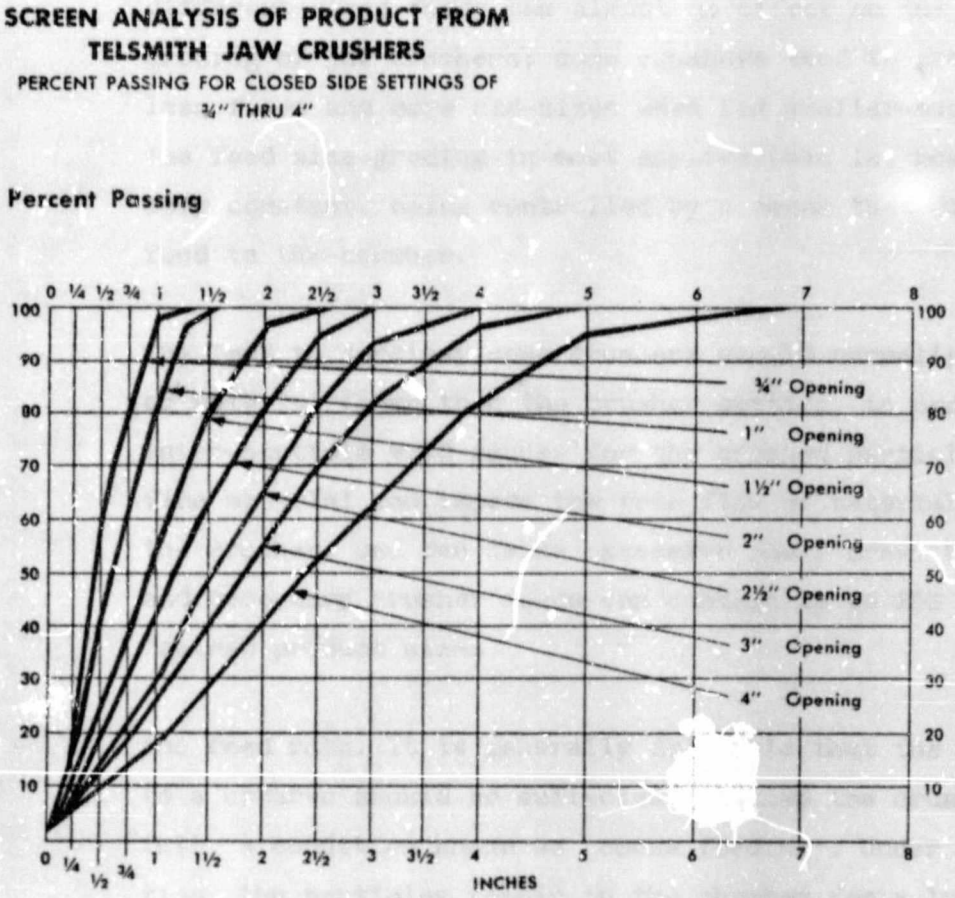

Figure 3.2 Example of manufacturer's curves relating crusher setting to predicted output-grading

Curves such as those in Figure 3.2 are derived by averaging a large number of test results. Nevertheless, the curves cannot be regarded as more than reasonably close approximations, because they do not consider several factors that could affect the output grading. Those factors include:

- the **type of rock** being processed. Stronger rocks tend to form coarser products. In general, however, most materials have grading curves of similar shape and slope, and very similar gradings can be obtained from different rocks by adjusting the crusher setting, a closer setting being required for a stronger rock (Shergold, 1959).

- the **feed material size grading.** Within reason, the use of different-sized feeds has almost no effect on the product grading of jaw crushers; cone crushers tend to produce slightly less fines and more mid-sizes when fed smaller-sized feeds. The feed size-grading in most applications is, however, reasonably constant, being controlled by screens that direct the feed to the crusher.

  The feed to tertiary cone crushers should normally be free of material finer than the crusher setting, in order to provide inter-particle void spaces for the crushed particles produced; fine material can impede the free flow of material through the crusher, and can cause excessive power draw. Primary and secondary crusher feeds can contain up to 25% of the desired product sizes.

- the **feed rate.** It is generally desirable that the feed rate to a crusher should be sufficient to keep the crushing cavity full, a condition known as 'choke feeding'. Under this condition, the particles remain in the chamber for a longer time and receive more crushing blows than would occur when the crusher is fed at a slower rate. Also, choke feeding increases an effect known as 'interparticle comminution', or 'attrition crushing', whereby the particles are compressed abrasively against each other; this causes a significant increase in the proportion of fines produced (and also markedly improves the shape of the product). In a well-designed operation, choke-feed conditions are ensured by using devices such as feed bins and vibrating feeders ahead of the crushers.

These factors also influence another important variable, namely, the capacity of the crusher. Manufacturers provide data indicating the maximum flow-rates that can be expected at different gap settings, but again, the data merely reflects average conditions.

Even though approximate, the crusher curves and capacity data supplied by manufacturers are in widespread use as aids for designing crushing plants and for solving problems concerning additions or alterations to plant flowsheets. They simplify the problems of selecting suitable crushers, and are useful in calculating screen sizes. In short, they eliminate much of the old-time guesswork in the formulation of the plant flowsheet (McGrew, 1950).

Nevertheless, this methodology of crusher application has been criticised as being not much more than a "Black Art" (Flavel, 1981). Certainly, the development of a meaningful optimisation model of a crushing circuit requires a more accurate means of estimating crusher output gradings and capacities, and the remainder of this chapter is concerned with the development of more suitable models of crushers.

The most useful model that will be discussed is essentially empirical, and is, fortunately, the simplest one: this is the approach used by Apollo.

Two other approaches are also described. The one builds on the premise that the output grading can be suitably described using statistical functions; the other, known as Whiten's Model, is an elegant mathematical model developed primarily from theoretical considerations. These two models are described in detail because they provide valuable insights about the crushing event. They are, however, not essential to the development of the remaining chapters, and the reader can skip these two sections without losing continuity.

3.1 THE APOLLO CRUSHER MODEL

This approach considers that a crusher, set at a specific gap-setting and operating in a specific environment, has an unvarying product-grading and capacity which are determined, without undue effort, by physical sampling during plant operation.

As long as the type of rock and the crusher setting are kept reasonably constant during the operating period, the sampling analysis will accurately reflect what the crusher will produce.

The accuracy of the model depends also on the consistency of the rate of feed to the crusher; in physical circuits where a crusher experiences periodic surges and trickles of material, the output grading will vary considerably. However, most well-designed plants minimise this effect by using feed bins and vibrating feeders to control the feed rate and to ensure choke feeding.

The model suggests that the crusher will produce its specified product grading regardless of the feed size. In the physical situation, this assumption is reasonable: as discussed earlier in the chapter, reasonable variations in feed size have hardly any effect on product grading. Also, the feed size is usually constrained by the screens that route the material to the crusher.

Nevertheless, modelling the output as being independent of the feed size can cause problems: in the extreme, a crusher may be fed a maximum size of 13.2mm, for example, yet is specified to produce fractions larger than this; the crusher thus becomes a 'boulder producer'. The Apollo model prevents this situation from occurring, by using a technique known as 'crusher physics' (Tobler, 1984), described in more detail in Chapter 7.

The Apollo model is thus very simple: for a crusher in a given circuit, one merely specifies the expected product-grading and capacity.

Of course, if the model is to reasonably reflect reality, accurate input data is required. Collecting the crusher performance data, by means of sampling procedures, is not difficult, but is, by far, the most time-consuming task in setting up an Apollo model of a plant. Some details on the sampling procedures involved are given in Chapter 7. (For a crusher which is not currently in operation, physical sampling is not possible, and one may have to rely on data supplied by the manufacturer and data from other crushers operating in a similar environment.)

The simplicity of the approach does invite a limitation, however: it does not indicate how the performance of the crusher is affected by variation of the operating parameters. To determine the effect of a change in the crusher setting, for example, requires that, either

- the crusher is operated accordingly and the sampling procedure is repeated (requiring interruptions to production), or

- the base data is extrapolated using the manufacturer's curves.

The reader may think that the Apollo model of a crusher is not really much of a model at all, in that it merely reflects how the crusher performs in a specific physical situation, without considering any of the relevant parameters. However, I feel that this 'limitation' is in fact the model's strong point, for the following reasons:

- it is very simple; there are no complicated mathematics or curve fitting procedures involved

- it directly reflects the physical situation, so that it is accurate (for any given circumstance)

- the sampling procedures and analyses force the modeller (and the plant personnel) to get very close to the physical operation. Developing an effective model requires that the modeller becomes intimately knowledgeable about the physical operation.

More details about the Apollo model are given in Chapter 7.

3.2 A STATISTICAL MODEL OF A CRUSHER

As discussed in Chapter 2, numerous mathematical functions have been postulated to describe the size distribution resulting from a crushing process. The most important of these is the Rosin- Rammler equation, which describes the theoretical distribution resulting from a single-breakage event. Because particles in a crusher are subjected to multiple blows, the equation is somewhat inadequate (the Whiten model,

discussed in Section 3.3, accommodates multiple breakage and makes appropriate use of the Rosin-Rammler equation).

Taking a different approach, the author (Hayden, 1981) has proposed a descriptive mathematical function which incorporates the statistical normal distribution with its 'probability density function' (pdf) given by

$$f(x) = \exp[-(x-m)^2/2s^2] \;/\; s\sqrt{2\pi}$$

where m is the mean particle size and s is the standard deviation.

The normal distribution pdf, f(x), is a smoothed frequency curve which gives the relative frequency of occurrence of size x in the output. Since the usual way of describing size distribution is in terms of the "cumulative percent passing size a", it could be argued that the 'cumulative density function' (CDF), given by

$$F(a) = \int_0^a f(x).dx$$

is more appropriate. However, in developing a descriptive mathematical function, the pdf form was preferred, because it affords an easier conceptualisation of size distribution. Also, the normal distribution CDF, F(a), cannot be evaluated in a closed form suitable for computations. A typical pdf and CDF of the normal distribution are shown in Figure 3.3.

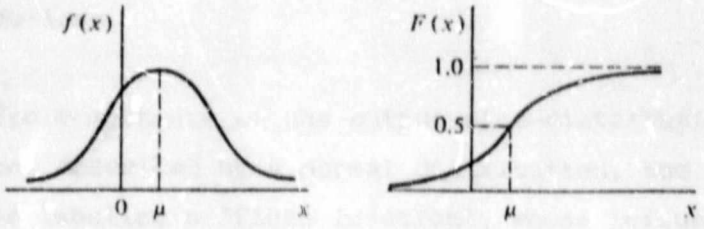

Figure 3.3 Typical normal-distribution pdf and CDF

Author Hayden John Samuel
Name of thesis The Modelling And Optimisation Of Aggregate Plants, And The Use Of The Apollo Computer Program. 1986

PUBLISHER:

University of the Witwatersrand, Johannesburg
©2013

LEGAL NOTICES:

Copyright Notice: All materials on the University of the Witwatersrand, Johannesburg Library website are protected by South African copyright law and may not be distributed, transmitted, displayed, or otherwise published in any format, without the prior written permission of the copyright owner.

Disclaimer and Terms of Use: Provided that you maintain all copyright and other notices contained therein, you may download material (one machine readable copy and one print copy per page) for your personal and/or educational non-commercial use only.

The University of the Witwatersrand, Johannesburg, is not responsible for any errors or omissions and excludes any and all liability for any errors in or omissions from the information on the Library website.