

https://dspace.org/

Fostering diversity through South Africa's broad based black economic empowerment act

Ijasan, Eseigboria Grace Paula

2018

https://hdl.handle.net/10539/28640

Ijasan, Eseigboria Grace Paula, 2018, Fostering diversity through South Africa's Broad Based Black Economic Empowerment Act, University of the Witwatersrand, https://hdl.handle.net/10539/28640

Downloaded from a DSpace repository. https://dspace.org/



FOSTERING DIVERSITY THROUGH SOUTH AFRICA'S BROAD BASED BLACK ECONOMIC EMPOWERMENT ACT

Eseigboria Grace Paula Ijasan

920960

November 2018

A thesis submitted to the Faculty of Commerce, Law and Management, University of the Witwatersrand, in fulfilment of the requirements for the degree of Doctor of Philosophy.

Supervisor: Dr. Christoph Maier

Declaration

I declare that this thesis on FOSTERING DIVERSITY THROUGH SOUTH AFRICA'S BROAD BASED BLACK ECONOMIC EMPOWERMENT ACT is my own, unaided work. It is submitted in fulfillment of the requirements of the degree of Doctor of Philosophy in the University of the Witwatersrand, Johannesburg. It has not been submitted before for any degree or examination in any other University.

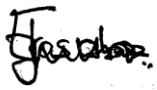

_____

Eseigboria G. P. Ijasan

November 2018

© Eseigboria Grace Paula Ijasan, 2018

Dedication

This work is dedicated to my mother, Lady Grace Otaigbe. It has been six years since you went to be with the Lord. Yet this journey would have been impossible if I did not learn to draw strength from God like you taught me to. This is for you, Mom.

© Eseigboria Grace Paula Ijasan, 2018

Acknowledgements

Right before I commenced this journey, I was told it would be a very long and lonely one. One that would be filled with moments of self-doubt, setbacks, moments where I would be both emotionally and financially drained. Indeed, it was true. However, there were certain people that never allowed me to give up even if I wanted to.

My first appreciation goes to God. His grace kept me through it all. He proved to me that He is a God who is too faithful to fail. True to his name, this journey has ended in praise.

Dr. Christoph Maier, I don't think I have mentioned this enough but here it goes "Thank you, thank you, thank you". I still remember that first call you made to me while I was back home, telling me you were interested in my work. I could not have wished for a better supervisor. I am forever grateful to you for all the push without which this would not have been possible.

Prof Louise Whittaker, you said, "I know it all looks like its not coming together, but it sure will and you will be glad you made the decision to do this". Prof Greg Lee and Prof Anthony Stacey, thank you for all the guidance. It meant a lot to me. To my friends and colleagues, Euphemia, Niri, Anne, Wycliffe Nduga, Wycliffe Oluoch, Geoffrey, Jacq, Dr. Nomusa, Dr. Gideon, Dr. Jones, Mmabatho. How I wish I could list you all. Thank you for being a part of my story. Cheers to sticking together.

To my Dad, Sir Edmund Otaigbe and wonderful parents-in-law, Sir and Lady Ajibade Ijasan, I held on to your calls and prayers. To my siblings, Henry, Tony, Eunice, Edmund, Wole, Joshua, Bayo, Olere and Motunrayo, thank you for kind words of encouragement.

To my husband, Dr. Kola Ijasan, you are my rock, the better part of me, my heart. These last few months would have been unbearable, but you made them go by like a breeze. You held the home front like a pro. You are my calm amid the storm. Thank you for everything. My kids, 'Deronke, 'Demi and 'Degoke, Mommy made it and all because you never stopped praying for her. I love you angels.

Lastly, thank you to Bradlow and the Wits University for partially funding my studies through the Bradlow foundations and Post Graduate Merit award respectively.

© Eseigboria Grace Paula Ijasan, 2018

Abstract

South Africa gained strong recognition all over the world after the fall of apartheid. Alas their quest to depolarizing the economy of the country has not ended. Several transformational initiatives have been set up by the government to accomplish this feat, the latest and most successful, in terms of economic empowerment, is the Broad-Based Back Economic Empowerment (BBBEE) Act. This initiative has however, been criticized by academics and its direct beneficiaries as not fulfilling its underlying purpose which is to smooth the coexistence of its diversified society. The question has been "is this just another initiative that gives the picture-perfect demographic representation in the work environment or is it giving us much more?" A major discourse has been controversies about the Act's operationality in achieving its aim and its possible contribution in reinforcing discrimination resulting from societal power shift; hence, the backlash effect on beneficiaries and reverse discrimination on the non-PDI's (previously disadvantaged individuals).

It is on the premise of these questions and criticisms that this research strives to evaluate the Broad Based Black Economic Empowerment initiative as a diversity initiative that has gone beyond managing diversity to fostering diversity. It introduced a framework for fostering diversity which was used as a guideline in developing the Fostering Diversity Index questionnaire. Purposive sampling was used, focusing on nine top BEE companies as rated by EmpowerDex. A well-structured questionnaire was developed and distributed within the companies. These companies had their organisational culture assessed, psychological empowerment evaluated and social perceptions of diversity through the implementation of BBBEE evaluated.

Findings from this research indicate that the BBBEE Act has a good potential for fostering diversity; however, fostering diversity requires an organisation to have a culture which embraces diversity as well as an adequate level of psychological empowerment. Without both, there will always be the disconnect between a government diversity initiative, such as the BBBEE and the internal state of affairs of the organisation. This study shows the dynamic relationships between organisational culture, social perception of diversity and psychological empowerment within these top-rated BEE companies. Gender was the only factor that predicts workplace diversity. Among the implication to policy, it is recommended that the implementation process of BBBEE be reviewed to attend to the salient issues of diversity.

© Eseigboria Grace Paula Ijasan, 2018

Contents

List of Figures and Tables....x
List of Abbreviations....xii
CHAPTER 1 Introduction....1
1.1 Background of Study....1
1.2 Problem Statement....4
1.3 Research Aim and Objectives....6
1.4 Research Questions....6
1.5 Originality, Contribution and Significance....7
1.5.1 Theoretical Contribution....7
1.5.2 Practical Contribution....8
1.5.3 Empirical Contribution....8
1.6 Research Assumption....8
1.7 Delimitations of the Research....9
1.8 Ethical Considerations....10
1.9 Research Plan and Proposed Structure of Thesis....11
1.9.1 Research Plan....11
1.9.2 Structure of Thesis....12
1.10 Chapter Summary....13
CHAPTER 2 Literature Review....15
2.1 Introduction....15
2.2 Diversity and Diversity management....15
2.2.1 The Concept of Diversity....15
2.2.2 Perspectives/ Dimensions of Diversity....17
2.2.3 Historical and contextual Changes in Diversity Management....19
2.2.4 Benefits of Diversity....20
2.3 Theoretical Background of Diversity and Inclusion....22
2.3.1 Re-awakening of Diversity Management....24
2.3.2 Reasons for Diversity Management in Organisations....24
2.3.2.1 Globalization....25
2.3.2.2 Migration....26
2.3.2.3 Ageing Population....26
2.3.2.4 The Role of Women....27
2.3.2.5 Corporate Structure Changes....27
2.4 Approaches to Diversity Management....27
2.4.1 Terminal Assimilation Approach....27

© Eseigboria Grace Paula Ijasan, 2018

2.4.2 Terminal Integration....28
2.4.3 Instrumental Assimilation....29
2.4.4 Instrumental Integration....29
2.4.5 Dual-value Assimilation....29
2.4.6 Dual-value Integration....30
2.5 Perceptions of Diversity Management....31
2.6 Diversity of Africa....35
2.6.1 Affirmative Action Initiative (AA)....38
2.6.2 Employment Equity....41
2.6.3 Focus of the Broad Based Black Economic Empowerment Act....43
2.6.3.1 Direct Empowerment....44
2.6.3.2 Human Resource Development....44
2.6.3.3 Indirect Empowerment....45
2.7 Fostering Diversity....45
2.7.1 Social Psychological Literature on Diverse Groups....49
2.7.1.1 Past Studies on Social Psychology of Diverse Groups from 1965- 1989 ..49
2.7.1.2 Past Studies on Social Psychology of Diverse Groups from 1991- 2008 ..50
2.7.1.3 Past Studies on Social Factors of Diverse Groups....52
2.7.2 Diversity Management and Organisational Functions....53
2.8 Contextual Nature Broad Based Black Economic Empowerment....55
2.8.1 Perception of BBBEE Implementation....56
2.8.2 Effect of BBBEE on Economic Competitiveness....58
2.8.3 Racial Identity and Affirmative Action....59
2.8.4 Some Key Reviews on BBBEE....61
2.8.5 Assessment of the Macro-economic Implications of the BBBEE Initiative....65
2.8.6 Effectiveness of Past Interventions in South Africa....71
2.9 Preliminary Findings of the relationship between BBBEE & Fostering Diversity.73
2.10 Chapter Summary....77
CHAPTER 3 Research Methodology....78
3.1 Introduction....78
3.2 Research Philosophy, Paradigms and Approach....78
3.2.1 Research Design....80
3.2.2 Research Paradigm....82
3.2.3 Research Approach....82
3.3 Appropriateness of Research Methodology....84
3.4 Research Methods....86

© Eseigboria Grace Paula Ijasan, 2018

3.4.1 Pilot Study 86
3.4.2 Questionnaires 87
3.4.3 Sampling 87
3.5 Data Analysis Technique 89
3.5.1 The Factor Analysis Model 89
3.5.2 Confirmatory Factor Analysis (CFA) 91
3.5.3 The CFA Model 91
3.5.4 Regression and Structural Equation Modelling SEM 93
3.6 Reliability and Validity 93
3.7 Chapter Summary and Conclusion 96
CHAPTER 4 Measurement Tool Development 97
4.1 Diversity Management Perspectives 97
4.2 The choice of OCAI as a part of the measuring tool 99
4.2.1 OCAI Four Factor Model 99
4.2.2 Reliability of the OCAI tool 103
4.3 Psychological Empowerment 108
4.4 Social Perception 113
4.5 Chapter Summary and Conclusion 117
CHAPTER 5 Data Analysis and Interpretation 118
5.1 Introduction 118
5.2 Descriptive Statistics of the of Identified variables 118
5.3 Interpretation of the Exploratory Factor Analysis and Reliability Results 119
5.3.1 Exploratory Factor Analysis of the Organisational Culture Assessment Inventory. 124
5.3.2 Exploratory Factor Analysis and Reliability of the Psychological Empowerment Scale. 132
5.3.3 Exploratory Factor Analysis and Reliability of the 'Social Perception' of BBBEE in organisation scale. 134
5.4 Interpretation of the Confirmatory Factor Analysis (CFA) Results 136
5.4.1 Analysis of the Convergent and Discriminant Validity of the OCAI 138
5.4.2 Analysis of the Convergent and Discriminant Analysis of the OCAI as obtained by Cameron and Quinn (2011) 141
5.4.3 Analysis of the Convergent and Discriminant Analysis of the Psychological Empowerment scale 144
5.4.4 Analysis of the Convergent and Discriminant analysis of the Social perception of BBBEE 146
5.4.5 Assessing the Overall Model Fitness of the OCAI, psychological Empowerment Scale and Social Perception Scale 150

© Eseigboria Grace Paula Ijasan, 2018

5.4.5.1 Model Fitness for OCAI 150
5.4.5.2 Model Fitness for Psychological Empowerment Scale 153
5.4.5.3 Model Fitness for Social Perception Scale 158
5.5 Interpretation of the Structural Equation Modeling Results 161
5.6 Influence of Respondents general profile on Fostering Diversity 165
5.7 Comparing the Ideal and Current Culture of the Respondents 166
5.8 Chapter Summary and Conclusion 171
CHAPTER 6 Conclusion and Recommendation 172
6.1 Introduction 172
6.2 Summary of Findings 173
6.2.1 Evaluation of the Current Understanding of BBBEE Act 173
6.2.2 Measuring the Level of Fostering Diversity 174
6.2.3 Exploring the Impact of BBBEE Act on Fostering Diversity 176
6.2.4 Establishing a relationship between BBBEE act and Fostering Diversity 178
6.3 Implication of Research Findings 179
6.3.1 Implications to Policy 180
6.3.2 Implication for Social Identity Theory 180
6.4 Limitations of the Research 181
6.5 Opportunity for Future Research 182
6.6 Conclusion 182
References 184
Appendices 201

© Eseigboria Grace Paula Ijasan, 2018

List of Figures and Tables

FIGURE 1.1: CONCEPTUAL FRAMEWORK....14
FIGURE 1.2: RESEARCH DESIGN....14
FIGURE 2: CONCEPTUALISATION OF THE DIMENSIONS OF DIVERSITY....18
SOURCE: MAZUR, 2010 AND JANSSENS AND STEYAERT, 2003....18
FIGURE 3: REASONS FOR DIVERSITY MANAGEMENT IN ORGANISATIONS....25
FIGURE 2.3: APPROACHES TO MANAGING DIVERSITY....31
TABLE 2.1 DIVERSITY MANAGEMENT APPROACH VARIABLE....33
FIGURE 2.6 THE COMPONENT, ELEMENT AND WEIGHT OF THE BBBEE....44
FIGURE 2.7 ELEMENT FOSTERING DIVERSITY....48
TABLE 2.2 SUMMARY OF SOME KEY LITERATURE....74
TABLE 3.1 SOURCE OF DATA IN RELATION TO RESEARCH OBJECTIVE....86
FIGURE 3.1 SUMMARY OF RESEARCH POSITION....96
TABLE 5.1: GENERAL PROFILE OF RESPONDENTS....119
TABLE 5.2: COMPONENT MATRIX FOR OCAI (NOW)....125
TABLE 5. 3: FOUR FACTOR SOLUTION OF MAXIMUM LIKELIHOOD EXTRACTION OF OCAI....128
TABLE 5.4: COMPONENT SCORE MATRIX LOADINGS (ENFORCING FACTORS AS IT WAS IN THE OCAI....130
TABLE 5.5A: PATTERN/STRUCTURE MATRIX FOR PCA WITH VARIMAX ROTATION FOR THE THREE FACTOR SOLUTION OF 'PSYCHOLOGICAL EMPOWERMENT'....133
TABLE 5.5B: PATTERN/STRUCTURE MATRIX FOR PCA WITH VARIMAX ROTATION FOR TWO FACTOR SOLUTIONS IN SOCIAL PERCEPTION OF BBBEE IN ORGANISATION SCALE....135
TABLE 5.6: SIGNIFICANT LOADINGS OF ITEMS BASED ON SAMPLE SIZE....137
TABLE 5.7: STANDARDIZED FACTOR LOADINGS OF CONSTRUCT ITEMS....138
TABLE 5.8: AVE AND COMPOSITE RELIABILITY OF THE OCAI BASED ON THE FOUR FACTORS EXTRACTED USING MAXIMUM LIKELIHOOD EXTRACTION METHOD....140
TABLE 5.9: DISCRIMINANT VALIDITY OF THE FOUR FACTORS SOLUTION OF THE OCAI BASED ON THE FOUR FACTORS EXTRACTED USING ML EXTRACTION METHOD....140
TABLE 5.10: STANDARDIZED FACTOR LOADINGS OF CONSTRUCT ITEMS....141
TABLE 5.11: AVE AND COMPOSITE RELIABILITY OF THE OCAI BASED ON THE CAMERON FOUR FACTOR EXTRACTION....143
TABLE 5.12: DISCRIMINANT VALIDITY OF THE FOUR FACTORS SOLUTION OF THE OCAI BASED CAMERON EXTRACTION PATTERN.....143
TABLE 5.13: STANDARDIZED LOADINGS OF THE ITEMS ONTO THEIR RESPECTIVE FACTORS (PSYCHOLOGICAL EMPOWERMENT)....144
TABLE 5.14: AVE AND CONSTRUCT RELIABILITY OF THE FACTORS EXTRACTED IN THE PSYCHOLOGICAL EMPOWERMENT SCALE....145
TABLE 5.1 : DISCRIMINANT VALIDITY OF THE FACTORS IN THE PSYCHOLOGICAL EMPOWERMENT SCALE....146
TABLE 5.16: STANDARDIZED ITEM LOADINGS FOR SOCIAL PERCEPTION OF BBBEE....146
TABLE 5.17: AVE AND CONSTRUCT RELIABILITY VALUES....147
TABLE 5. 18: DISCRIMINANT VALIDITY OF THE SOCIAL PERCEPTION INSTRUMENT....147
TABLE 5.19: FIT INDEXES RECOMMENDED BY HAIR ET AL., (2010) AND OTHERS....150
TABLE 5.20: SUMMARY TABLE FOR NOTES FOR THE MODEL....152
TABLE 5.21: FIT INDICES FOR OCAI....152
TABLE5.22: SUMMARY OF PARAMETERS FOR THE CFA MODEL FOR PSYCHOLOGICAL EMPOWERMENT....155
TABLE 5.23: FIT TEST FOR PSYCHOLOGICAL EMPOWERMENT....155
TABLE 5.24: SUMMARY OF PARAMETERS FOR THE MODIFIED CFA MODEL FOR PSYCHOLOGICAL EMPOWERMENT....157
TABLE 5.25: MODEL FIT INDICES FOR THE MODIFIED CFA MODEL FOR PSYCHOLOGICAL EMPOWERMENT.....157
TABLE 5.25: NOTE SUMMARY FOR THE MODEL FIT TEST FOR SOCIAL PERCEPTION.....159
TABLE 5.26: MODEL FIT INDICES FOR SOCIAL PERCEPTION SCALE....159
TABLE 5.27: SUMMARY OF PARAMETERS FOR THE MODIFIED CFA MODEL FOR SOCIAL PERCEPTION....160
TABLE 5.28: MODEL FIT FOR THE MODIFIED CFA MODEL FOR SOCIAL PERCEPTION....161

TABLE 5.29: FIT INDICES TEST FOR SEM 164
TABLE: 5.30: HYPOTHESES TESTING AND PATH COEFFICIENT VALUES 164
TABLE 5.31: REGRESSION ANALYSIS OF RELATIONSHIP BETWEEN DEMOGRAPHIC VARIABLES AND WORKPLACE DIVERSITY 165
TABLE 5.32: PREDICTIVE COEFFICIENT OF DEMOGRAPHIC VARIABLES ON WORKPLACE DIVERSITY 165

© Eseigboria Grace Paula Ijasan, 2018

List of Abbreviations

AA- Affirmative Action
ANC-African National Congress
BBBEE- Broad Based Black Economic Empowerment Act
BBC-Black Business Council
BEE- Black Economic Empowerment
CFA-Confirmatory Factor Analysis
CIA-Central Intelligence Agency
DTI-Department of Trade and Industry
EE-Employment Equity
EEO-Equal Employment Opportunity
EFA--Exploratory Factor Analysis
EME-Exempted Micro Enterprises
FA-Factor Analysis
FDI Fostering Diversity Instrument
HDSA-Historically Disadvantaged South Africans
HR-Human Resources
JSE-Johannesburg Stock Exchange
NBBEE- Narrow Based Black Economic Empowerment
OCAI-Organisational Culture Assessment Instrument
PDI-Previously disadvantaged individual
RMSEA- Root Mean Squared Error of Approximation
RMSR-Root Mean Squared Residual
SCT-Self Categorisation Theory
SED-Social Economic Development
SIT- Social Identity Theory
SME-Small and Medium Sized Enterprises
SMME- Small Medium and Micro Enterprises
SPSS- Statistical Package for Social Sciences
UNESCO-United Nations, Educational, Scientific and Cultural Organisations
WD-Work Diversit

© Eseigboria Grace Paula Ijasan, 2018

CHAPTER 1 Introduction

1.1 Background of Study

The business world today is greatly challenged by diverse issues such as an increasingly multi-ethnic workforce, gender equality awareness and globalisation of markets. These trends account for the pressures on organisations to push for a diversified workforce and enterprise, either as a legal obligation or as an access to tap into the benefits of the evolving business world. Earlier research sought to enlighten managers on the potential gains of diversity from a broader range of knowledge, expertise from varying perspectives and creativity (Evans, 2015; Mannix & Neale, 2005; Maier, 2002; Loden & Rosener, 1991). Research showed that most organisations have accepted the concept of the gains of diversity and for that reason they have made conscious efforts to incorporate their affirmation into the mission and vision of their organisations(Broughton & Strebler, 2008; Cox, 1991). However, it is important to note that the term diversity has different meanings to different organisations. The definitions of diversity have mainly focused on dimensions such as race, ethnicity, age, education, language, gender, nationality and more (Rogers & Meltzoff, 2017; Bassett-Jones, 2005; Kossek & Lobel, 1996; Loden & Rosener, 1991). Thomas and Ely (1996) proposed that diversity goes beyond increasing the number of different identity-group affiliations on the payroll. It involves recognizing that such an effort is merely the first step in managing a diverse workforce for the organization's utmost benefit. They further explained that "diversity should be understood as the varied perspectives and approaches to work that member of different identity groups brings" ("Making Differences Matter: A New Paradigm for Managing Diversity", 1996). This definition gives a narrow description of diversity as it can be interpreted as opinions and work ethics that the different identity groups exhibit at work. To have a clearer understanding of the term, Harrison and Sin (2005) in Sheriff (2015), simplified the definition of diversity to be the 'collective amount of differences among members within a social unit'. This definition encompasses a wider variety of 'differences' e.g. demographic, psychological, perceived and actual physical differences. Homan and Greer (2013) argues that an implication of these 'differences' is the unavoidable conflicts as a result of lack of trust, creation of subgroups

© Eseigboria Grace Paula Ijasan, 2018

(minority /majority) leading to intergroup bias and dislike among individuals. This is corroborated in the social identity theory put forward by Turner and Giles (1981). The Social Identity Theory (SIT) is a cognitive theory which postulates that individuals tend to classify themselves and others into social categories and that these classifications have a significant effect on human interactions (Burgoon et al., 2016; Booysen, 2007; Hogg, 2006; Hogg & Turner, 1985; Turner & Giles, 1981). Hogg and Turner (1985) explains that in terms of an externally designated group label, the formation of these groups is usually through a psychological process called self-categorisation and it is functional in one or both of two ways. Firstly, it can fulfil a need for coherence by rendering self and other perceptions predictable and orderly in terms of prescriptive behavioural expectations and secondly, it can fulfil a need for positive self-esteem by allowing an individual to construct a social identity which is evaluatively positive and maintainable as such by intrinsically competitive intergroup competition (Michael A. Hogg & Turner, 1985).

With these perspectives and postulation on diversity, business minded practitioners have become more apprehensive about pursuing diversity (Velliaris & Pierce, 2017; Cox 1991) Diversity is wrongly seen to be an outcome of a moral obligation which is immeasurable and leads to high cost of sustenance resulting from communication breakdown, interpersonal conflicts and potential high cost of turnover, all due to the increased cultural differences instead of a strategy to improve employee performance and to increase the business bottom-line (Cox, 1991). The variations in earlier theories led to the 'contingency approach' to diversity. This approach seeks to find a common position to balance the inconsistencies in the findings of the true implication of a diversified workforce. This contingency approach focused on examining the effects of diversity (Cao et al., 2015; Armstrong-Stassen & Templer, 2005; Balkundi, Kilduff, Barsness, & Michael, 2006; Ball, Monaco, Schmeling, Schartz, & Blanck, 2005; Barinaga, 2007; Bilimoria, 2006; Chung-Herrera & Lankau, 2007; Joshi & Roh, 2007; Mannix & Neale, 2005; Rupp, Vodanovich, & Crede, 2006; Shore, Chung-Herrera, Dean, Ehrhart, & Jung, 2009; Singh & Point, 2006) and the impacts of the moderators (Guillaume et al., 2017; Carmeli, Reiter-Palmon, & Ziv, 2010; Chung-Herrera & Lankau, 2007; McCuiston, Wooldridge, & Pierce, 2004). It also focuses on the overall aim of acquiring the optimal benefits of pursuing diversity. This approach is what is now generally referred to as 'diversity management'.

In explaining the importance of 'diversity management', (Bernardi, & De Toni, 2009; Barabino et al., 2001), all agree that diversity management is an innovative approach to the management

© Eseigboria Grace Paula Ijasan, 2018

of diversities through which it is possible to create an organisational climate of integration in which people feel themselves integrated and respected for their uniqueness. It is important to note that while diversity management is popularised in research and on the airwaves, it is a voluntary programme that is designed to create greater inclusion of all individuals into informal social networks and formal company programs (Gilbert et al., 1999).

This is even more important as it is assumed to replace or rather correct the changing affirmative action policy perceived as providing advantage to specific groups. Based on the preceding literature reviewed, diversity management can be defined as a complete organizational cultural change designed to foster appreciation of demographic, ethnic, and individual differences (Landy & Conte, 2016; Luthans et al., 2015; Gilbert et al., 1999). Furthermore, the same authors suggest that accomplishing cultural change designed to value diversity involves modification of existing procedures and practices, beginning with human resources function. This means that an important requirement for the implementation of diversity management is organisational culture. Sharing the same opinion as the researcher, Cox (2001), who views diversity management as a 'combination of organisational practices for managing people to maximize potential advantages of diversity and as policies for recruiting and retaining talent from different backgrounds' (Cox, 1991). Therefore, if the organisational culture isn't integration-oriented and if it does not have the integration values, every attempt of diversity management fails (Cox, 2001; 1991; Podsiadlowski, 2013).

This is one of the arguments of this research; it is proposed that diversity management initiatives like the BBBEE Act may be productive or counter-productive in South African companies as successful implementation of the Act is largely dependent on the organisational culture of these companies. This will then have an impact on its ability to foster diversity within the organisation. Furthermore, (Carmeli, 2010) in research to determine the impact of leadership to employee involvement revealed that in a diversified workplace, besides the organisational culture, the perceived leadership practice is a key determinant of employee's involvement in creative task. This explains how employees feel within their organisation. Carmeli recommends that an ideal leadership is a relational leadership i.e. inclusive leadership that reinforces three facets: openness, accessibility and availability (Carmeli, 2010).

Drawing from the previous sections and linking it to the implementation of the BBBEE Act in South Africa, there is still concern as to how successful BBBEE is within organisation. There are concerns as to how it has impacted on employee participation, commitment and morale not just to the PDI's but also to the majority social groups. Is the concern a result of the

© Eseigboria Grace Paula Ijasan, 2018

implementation process or factors like its incompatibility with the organisational culture, absence of integrating values and leadership incompetency?

1.2 Problem Statement

The South African government has had many initiatives in the past aimed at correcting some of the social ills of the apartheid government. Among those are affirmative actions like the Employment Equity Act of 1998 and the Promotion of the Equality and Unfair Discrimination Act of 2000. While these acts made impact, the government thought that more was needed to increase black control, participation in and ultimately, ownership of the economy, hence the promulgation of the Broad Based Black Economic Empowerment Act BBBEE 53 of 2003.
This was response to mounting public criticisms that government review the BEE policy and subsequently, passed a legislation that rendered the BEE more 'inclusive' or 'broad-based' in 2003, known as the Broad-Based BEE (BBBEE) Act 53 of 2003 (Ntim & Soobaroyen 2013).

The BBBEE Act was planned to deliberately transform the South African economy redistributing equity holdings to incorporate previously disadvantaged South Africans, re-organizing management structures and ensuring greater participation of the majority in the economy to achieve economic justice (Osode, 2004). For this work, the review of literature on the implementation of the Act is largely focused on three areas: (1) the politics behind the motive of instituting the Act, (2) the expectation with regards to achieving its objective of advancing black control and (3) ownership of the economy, and economic impact on businesses and foreign investment in the country (Ferreira & De Villiers, 2011; Ponte, Roberts, & Van Sittert, 2007; SATO, 2013; Schulze, 2012; Southall, 2007; Tangri & Southall, 2008). It was seen that there was a dearth of academic research on the linkages (if any) of BBBEE and diversity. Only a handful of research contributions have indirectly linked BBBEE to diversity in relation to work relationships and performance in organisations (Krüger, 2011; Patel & Graham, 2012; Tangri & Southall, 2008). One of the studies linking BBBEE to diversity is a study which proposed that implementation of the BBBEE Act is a positive move for the promotion of corporate social responsibility (Juggernath, Rampersad, & Reddy, 2013)

However, Horwitz and Jain (2009) submitted that the implementation of BBBEE is a strategic firm-level decision made considering access to business opportunities, resource capacity, growth potential market forces and survival necessities and that in practice, codes are

© Eseigboria Grace Paula Ijasan, 2018

implemented by a 'carrot and stick mechanisms facilitated by accredited BBBEE rating agencies. This means that companies have devised a way around the BBBEE. This makes the credibility and capacity of the act to deliver on the social and economic changes promised doubtful. By implication, it means there is a possibility for 'pseudo-inclusiveness' on the part of organisations if they want to cheat the system. Many researchers have studied the act from different perspectives, but no one has explored the BBBEE act in relation to its potential to deliver as a tool for fostering diversity in the workplace on a continuous basis. The BBBEE act is generally seen as an inclusion tool, but as it has been noted that there seems to be a way around the inclusion stream. So far there has been no discourse on whether the BBBEE Act is beneficial for fostering diversity, or is linked in any way to a more inclusive and diverse organisational culture.

This research intends to address this gap in research by linking BBBEE and fostering diversity. It sets out to see how BBBEE can go beyond just numerically including PDIs, and perhaps become a tool for fostering diversity. A conceptual framework of how the research plan works in relation to the research problem is depicted in Figure 1.1. below.

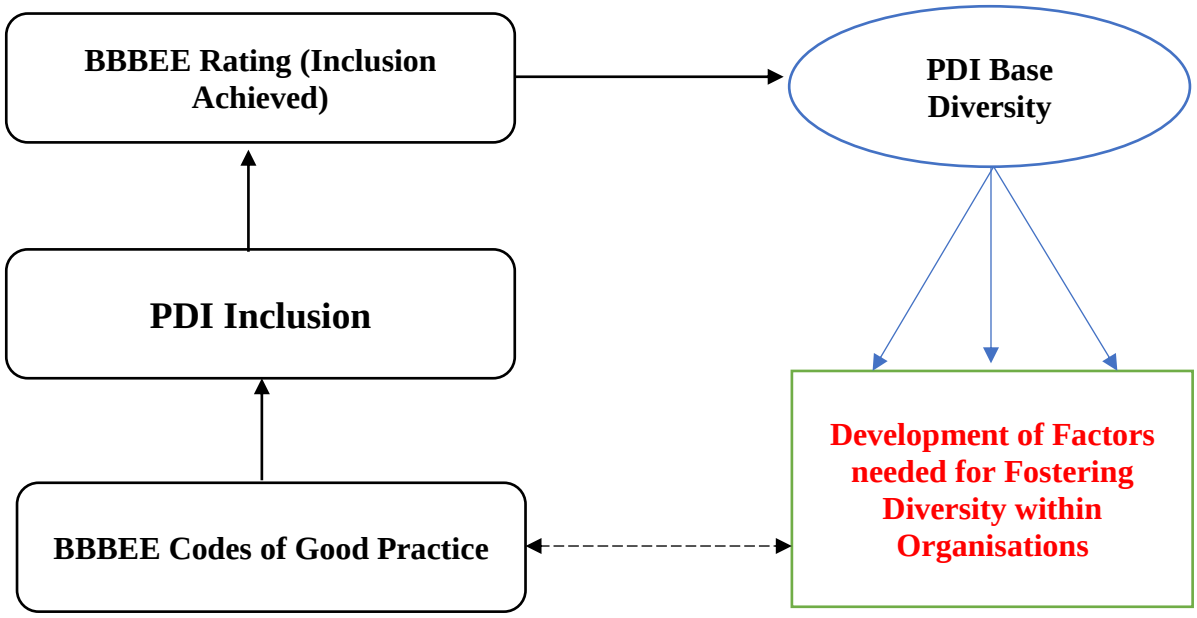

Figure 1.1: Conceptual Framework
Source: Author

The research focus is illustrated by Figure 1.1. it is shown that for businesses to be BBBEEE compliant, they need to follow as set of 'good practices'; chief among which is the inclusion

© Eseigboria Grace Paula Ijasan, 2018

of Previously Disadvantaged Individuals (PDIs). This would lead them to having a favorable BEE rating depending on how well they comply to these practices. Currently, this is where the focus of the BBBEE ends; companies show that they are inclusive. However, this research is suggesting that there is another level i.e. the diversity of the PDI base. The three arrows are representing the many factors which need to be in place for an organisation to get to a level whereby they not only need to numerically include but use BBBEE to foster their diversity.

1.3 Research Aim and Objectives

The overarching aim of this research is to evaluate the implementation of the BBBEE Act to assess its contribution to fostering diversity. This aim is achieved through the research objectives listed below which are:

1. To evaluate the current state of the art regarding BBBEE in South Africa with a view to provide a structured and comprehensive literature review of the research field. See section 6.2.1.
2. To produce a measuring tool that can be used to gauge the level of fostering diversity (Fostering Diversity Index) within companies. See section 6.2.2.
3. To explore the current implementation by companies of the BBBEE Act in order to assess how far such implementation is fostering diversity using the Fostering Diversity Index. See section 6.2.3.
4. To introduce a novel perspective of linking the BBBEE Act to fostering diversity that can guide conceptual thinking about fostering diversity in organisations. See section 6.2.4.

1.4 Research Questions

Literature explored in chapter two shows that besides the implementation of the BBBEE initiative, employers are still faced with the problem of low employee performance, commitment and morale. Organisations are demographically representative with the target less-disadvantaged individuals, which is a priority in recruitment and managerial roles. Yet the concerns mentioned above are a major setback in the sustainability of the BBBEE initiative. Hence, the main research question is: **"Does the implementation of the BBBEE Act foster diversity?"**

In view of the main question, the following sub-questions will inform the approach of this research.

1. What is the current understanding of the research area?

© Eseigboria Grace Paula Ijasan, 2018

2. How do we measure the level of fostering diversity?
3. How far does the implementation of the BBBEE Act foster diversity?
4. Is there a link between the BBBEE Act and fostering diversity?

1.5 Originality, Contribution and Significance

Different to previous research this research is not concerned about the implementation process of the BBBEE Act or achieved compliance. It extends the scope for the justification of the business case of diversity management beyond just crunching the demographic representation of organisations to a deeper level, which is a level where diversity is fostered.

It is the first study that links the South African BBBEE Act to the concept of fostering diversity scrutinising the impact BBBEE has on organisational culture and inclusion. The fact that public and private discussions about BBBEE and diversity have occupied centre stage for many years. (Southall, 2006; Horwitz, & Jain, 2011; Ntim, 2015). This has underlined the significance of this research. Providing theoretical and empirical research on the relationship between BBBEE and fostering diversity will therefor fill an important gap in the theoretical, practical and empirical discourse in South African, Africa and all over the world. Sections 1.5.1 to 1.5.3 below presents contributions of this research along the dimensions mentioned above. Section 6.3. also summarises the implications of the findings of this research on the theoretical, practical and empirical basis.

1.5.1 Theoretical Contribution

As an extension of prior research, this research project provides a theoretical and conceptual discourse of the perceptions and attitudes of employees and HR managers regarding fostering diversity in the workplace (see section 6.2.3). Theoretically, this research is a first attempt to link the BBBEE initiative to diversity by conceptually regarding BBBEE as a tool that could foster diversity in the workplace. This research provides a structured review of extant literature in relation to the various aspects of the diversity debate. Theoretical underpinnings were introduced. Related theories were introduced into the debate about the implementation of BEE; theories of social dominance, self-categorisation, social identity, anti-oppression and realistic group conflict were reviewed to explore why some of the innate nature of the country can be explained. This is also discussed later in section 6.3.

© Eseigboria Grace Paula Ijasan, 2018

1.5.2 Practical Contribution

On an applied level, the findings from this research show the disconnect between the current government regulations and the internal structure of the organisations surveyed. The implication of this disconnect will lead to unsuccessful implementation of the transformational initiatives which may not foster diversity as in the case of the BBBEE Act. On a first base, this research is providing academic and research-led support both to negate and clarify some of the misconstrued opinions of the BBBEE initiative. This means that there is a need and an opportunity for an appraisal of the BBBEE Act. It is expected that the findings of such appraisal will provide recommendations for the implementation of the BBBEE Act both to BEE practitioners within companies, organisations of all kinds and the regulatory government agencies (see section 6.3.1).

1.5.3 Empirical Contribution

The government conducts employer audits through the Department of Labour which makes sure there is no underrepresentation in the workforce. Empirically, this research developed the Fostering Diversity Index FDI which is a tool that assesses three critical inclusion concepts. These are organisational culture, psychological empowerment and social perception (see section 6.2.2). The research presents three hypotheses which are discussed in section 6.2.3. It is shown empirically that organisational culture impacts the employees much more than previously thought by most employers. This research - through the development of the FDI demonstrates that where the fabric of the organisational culture is entrenched with an atmosphere that fosters diversity, then compliance and commitment will be achieved bi-directionally (i.e. both from the staff to the company and vice-versa), because usually, for an employee, it is often a struggle to convince oneself that they are not a statistic in their organisation but rather a valued employee based on merit or expertise. But when key factors promoting diversity (as presented in the FDI) are rooted into the culture of the organisation, even within the BBBEE context, then diversity would be fostered. Section 6.2.4 shows the empirically established relationship between the BBBEE act and fostering diversity.

1.6 Research Assumption

The assumption of this research is that the degree of diversification of an organisation may reflect the level of organisational inclusive culture however it might not directly imply a commitment to fostering diversity; therefore, the number of blacks (Africans, Indians and

© Eseigboria Grace Paula Ijasan, 2018

coloured), gender ratio, ethnic ratio or any other dimension of diversity that exists within a workforce is a mere reflection of the level of the inclusive culture of an organisation but does not directly imply an equivalent level of fostering diversity (Thomas & Ely, 1996).

Simply put, "Level of diversified workforce = level of inclusive organisational culture ≠ level of fostering diversity"

The sample for the data consisted of South African banks and insurance companies. This choice of sample is motivated by the fact that this sector is one of the strongest economic contributors to South African GDP, employs several hundred thousand people and has a market capitalisation making it one of the most important sectors on the Johannesburg Stock Index (World Federation of Exchanges WFE, 2016). Hence, the assumption is that findings on the relationship of BBBEE and fostering diversity in this sector are valuable and will make a relevant contribution to the research field, to the South African economy, to South African academia and beyond.

1.7 Delimitations of the Research

The provisions of the Broad Based Black Economic Empowerment Act 53 of 2003, aims to give equal opportunities to blacks (Black African, Indians, Coloured), women and all other people referred to as Previously Disadvantaged Individuals (PDI's) in the country's economic development. The Act has 5 objectives, which are:

- Achievement of substantial racial composition in ownership,
- Management control,
- Skills development,
- Enterprise and supplier development and
- Socio-economic development (GovernmentGazette, 2013; Schulze, 2012)

Compliance to this act is measured based on each company's performance on achieving any or all of the five objectives of the Act. While it is important to recognise all five objectives, this research chooses to focus on the overarching aim of the act that border the deliberate and conscious mix of races, gender and identities in a working environment. This provides a link between the BBBEE Act as it fits the workforce diversity dimension which include age, race, gender, physical ability, ethnicity, culture and sexual orientation (Loden & Rosener, 1991; Shore et al., 2009) and also supports Harrison and Sin's (2005) definition of diversity as a collective amount of difference among members within a social unit (Harrison & Sin, 2005; Roberge & Van Dick, 2010). Streamlining the focus to racial differences eliminates all

© Eseigboria Grace Paula Ijasan, 2018

complexities of the implementation of the objectives and makes the rationale for this study easily comprehended and adaptable in context outside of South Africa.

The choice of looking at the BBBEE Act in relation to fostering diversity is formed because at the time of this research very little work has been done concerning the gains of the BBBEE Act in relation to how it can be used as a tool for fostering diversity. The researcher intends to investigate if there are measures taken by these companies that move them further from 'managing diversity' to 'fostering diversity'.

This research does not focus on Small and Medium-sized Enterprises (SME's) in South Africa. SMEs as described by the National Small Business Amendment Act of 2003 refers to any separate and distinct entity including cooperative enterprises and non-governmental organisations managed by one or more owners including its branches and subsidiaries, if any is predominantly carried out in any sector or subsector mentioned in the schedule of size standard and can be classified as SME by satisfying the criterion mentioned in the schedule of size standard (Government Gazette, 2003). The schedule of size standard ranges as follows, Micro: 0 to 4 employees; Very small: 5 to 9 employees; Small: 10 to 49 employees; Medium: 50 to 200 employees, all of which varies according to the sector. This variation is also applicable to the annual turnover which could be as low as R0.10m to as high as R51m, excluding gross asset value. According to DTI, SMEs with annual returns of R0.10m or less qualify as Exempted Micro Enterprises (EME). Furthermore, it qualifies for elevation to Level one contributor if it has 100% black ownership, having a BBBEE recognition of 135%. Bearing the above in mind, this research chooses to exclude all SMEs or EMEs with the logical reasoning that combining data from less diversified organisations like SMEs and highly diversified organisations like organisations on the EmpowerDex list of top BEE performers will limit the justification for the generalisation of the impact of BBBEE Act on fostering diversity.

1.8 Ethical Considerations

Consent is obtained from participants for the pilot study and main study. All primary and secondary data was handled confidentially and anonymously and at the same time academic and professional integrity will be maintained. This is because primary data was obtained using Qualtrics survey software, which makes use of in-depth interpretative online questionnaires. It does not disclose the identity of respondents but acts as an intermediary between the researcher and the respondents using IP addresses of both parties. A major advantage of using the panel distribution of survey using Qualtrics is that it allows the researcher to send reminders/'thank-

© Eseigboria Grace Paula Ijasan, 2018

you' notes, includes embedded data about respondents for evaluation, and can be surveyed repeatedly without re-importing the group. To retain confidentiality, the settings are quite flexible and can be set to anonymise responses. It does not store IP details but retains identifying information respondents' inserts in response to certain questions if applicable in a survey. Respondents and participants' privacy, protection, dignity and transparency are assured in this study. The retention of confidentiality was also maintained where face to face method of data collection was adopted. All responses remained anonymous.

1.9 Research Plan and Proposed Structure of Thesis

1.9.1 Research Plan

The proposed research has four stages. These stages are described below:

Stage 1

This is the early stage of the research. Here the research idea and topic are developed with the aim and objectives identified. Relevant literature is reviewed to understand the different elements that foster diversity in the workplace. The extensive literature review helps the understanding of this research from the background of moving from managing diversity to fostering diversity and then into understanding the broad aim of the BBBEE Act, identifying the research gap and developing the research questions. In continuance to developing the research questions is the choice of an appropriate research design and methodology.

Stage 2

Having completed a review of literature and choosing the quantitative method, samples are proposed for pilot study to be embarked upon prior to the distribution of the fully developed questionnaires. The purpose of this pilot scheme is to identify emerging themes that might be absent in the reviewed literature. Anonymous questionnaire surveys are distributed among companies on the EmpowerDex list of top performers. This is further explained in section 3.3. Only a few are considered for cross-sectional study to reduce the limitation of purposive sampling, which is in its subjectivity. This makes it difficult to defend or as an extension of prior research it provides an insight into the perceptions and attitudes of employees and HR managers regarding fostering diversity in the workplace. The sampling technique used for determining which company is selected is the *heterogonous purposive sampling* technique also known as *maximum variation sampling*. This includes sample companies from different sectors. With this approach it is shown that data collected reflects uniqueness to varying

© Eseigboria Grace Paula Ijasan, 2018

approach to diversity. This is further explained in chapter three. Data is analysed using Statistical Package for Social Sciences (SPSS).

Stage 3

At this stage, findings from questionnaires are reviewed and analysed statistically using SPSS software. Findings from the analysis are compared to the theoretical framework and literature postulations (where appropriate). This leads to stage four.

Stage 4

This stage presents the 'refined Fostering diversity index' that can be used to measure the level at which companies foster diversity. It also includes updating of literature and a comprehensive write up of the thesis in preparation for the final presentation of research report.

1.9.2 Structure of Thesis

This thesis is divided into six chapters which are described below:

Chapter 1 Introduction

This chapter gives an introduction in the background of the study problems, the research aims and objectives, research questions, and scope of the study: delimitation, research design and plan. It will also give a brief description of the structure of the thesis.

Chapter 2 Literature Review

In this chapter, the theoretical base of this research is developed. Literature on current interpretation and implementation of the BBBEE Act is discussed. This section of the research intends to establish a relationship between the BBBEE Act as a diversity initiative and fostering diversity. The Social Identity Theory and self-categorisation theory are discussed as they are the underlying theories behind this research. The term managing diversity is defined leading up to explaining what it means to foster diversity. Elements that foster diversity are identified and examined. This is where the main question emerges.

Chapter 3 Research Methodology

This chapter discusses the approaches that can be used for this research as well as the justification for the choice of methodology. A quantitative method is the main methodology. The preferred method for data collection is also discussed.

© Eseigboria Grace Paula Ijasan, 2018

Chapter 4 Measurement tool Development (Developing a model for determining level of fostering diversity)

In this chapter the methodology adopted for developing the tool for determining the level of fostering diversity is presented. The framework for designing this tool is developed using deductive reasoning logic with the reasons explained and justified within the chapter. It also presents the fostering diversity index (FDI) which is to be employed in the study.

Chapter 5 Data Analysis (Review of Questionnaires, statistical descriptions and Factor analysis)

This chapter reviews findings from the questionnaires. Here, organisational approach to diversity in relation to the diversity perspectives are identified and elements that foster diversity will be identified. Interrelationships between the organisational approaches to diversity, elements that foster diversity and implementation of BBBEE are considered. Social perceptions to BBBEE are empirically identified and findings are linked to the research objectives.

Chapter 6 Discussions, Recommendations and Conclusion

The discussion will summarise the research objectives and will also demonstrate that the guiding questions have been visited and treated explicitly. The current level of fostering diversity within BEE companies will be discussed and the contribution to knowledge from findings will be clearly mentioned. Recommendations for future research will be proposed for context within and outside the scope of this study.

1.10 Chapter Summary

This chapter introduced the research idea and focus. It gave a brief case to the current understanding of the BBBEE Act. It shows that no empirical assessment has been done on the implementation of the Act to establish a possibility of it being used as a tool that fosters diversity. It also describes the research plan and proposed data collection technique. The research plan is summarised in Figure 1.1 below. The next chapter is a preliminary literature review on this subject, carefully articulated in the different themes, identifying the problem and highlighting the gap in the current body of knowledge.

© Eseigboria Grace Paula Ijasan, 2018

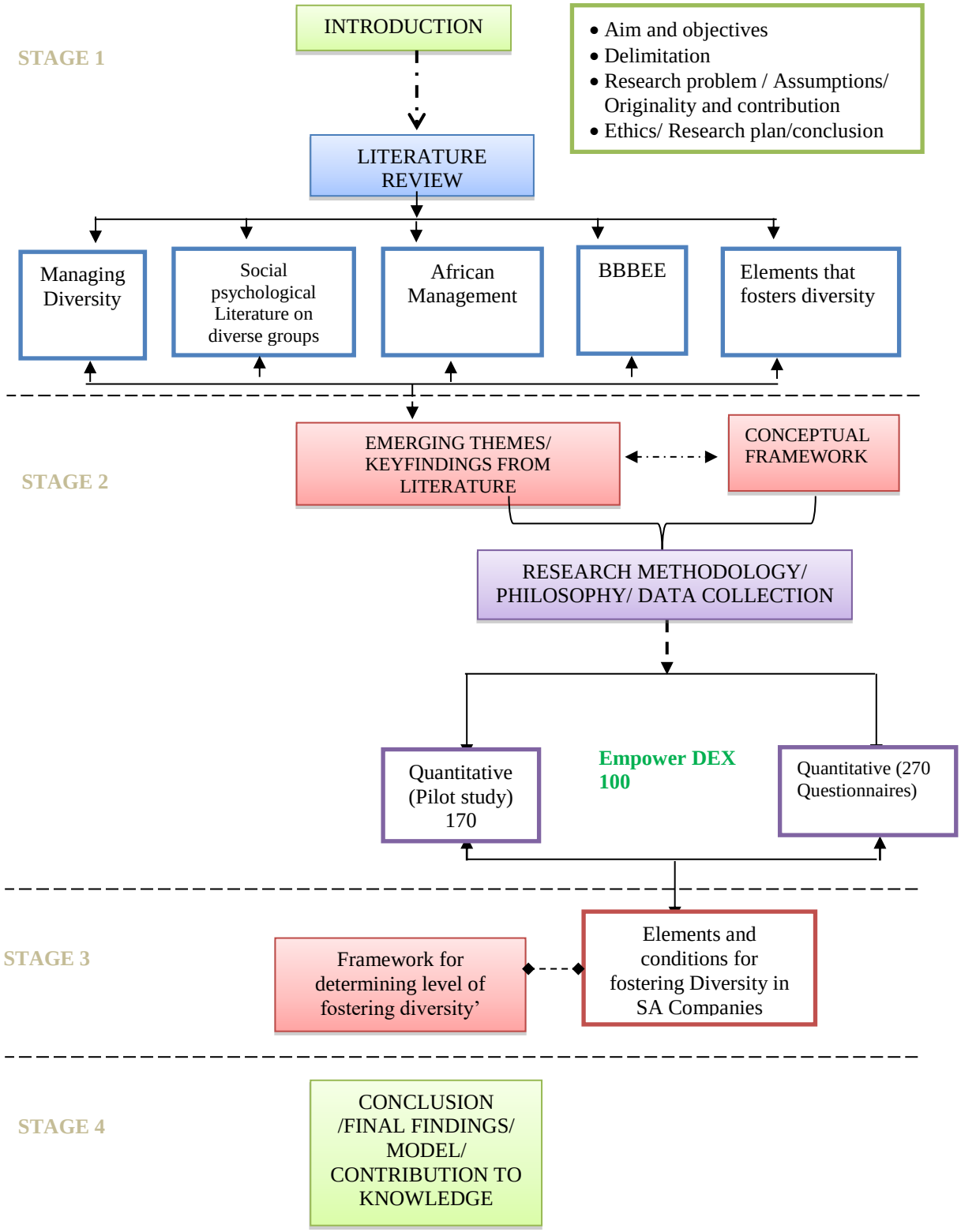

Figure 1.2: Research Design
Source: Author

© Eseigboria Grace Paula Ijasan, 2018

CHAPTER 2 Literature Review

2.1 Introduction

This section aims to give a preliminary review of literature on South Africa today and how well the government has been able to depolarise the work environment and the impact of transformation initiatives like the BBBEE i.e. how its implementation is being interpreted and evaluated with regards to employee work relationship and general performance. It also reviews literature on diversity management, social psychological literature on diverse groups in order to get an understanding of the concept of managing diversity and fostering diversity. It reveals elements for fostering diversity as well as discusses the Social Identity Theory and Self-Categorisation Theory, which are the underlying theories behind this study.

2.2 Diversity and Diversity management

As mentioned in section 1.1, the concept of diversity has been broadly discussed by past researchers in relation to diversity dimensions and number representation of these dimensions in the workplace. However, drawing from reviewed literature, (Rupp et al., 2006; Singh & Point, 2006; Ball et al., 2005; Chung-Herrera & Lankau, 2007) the evolving understanding of diversity encompasses a broader meaning that looks at it beyond number games to the importance of the uniqueness that accompanies these varied dimensions. With this current ideology of diversity in mind, it becomes pertinent to investigate the application of diversity management strategies and the necessity to modify them to suit the new thinking about diversity.

2.2.1 The Concept of Diversity

Diversity as a concept is discussed as it is thought pertinent to gauge the content and context within which this term has been used in previous studies. What readily comes out of literature is the myriad of names and terminologies used to describe this same phenomenon. It is seen that diversity is a subjective term and its use is highly prescriptive and dependent on the context within which it is used; Parham and Muller (2008) opines that the treatment of the subject is dependent even on the choice of the authors writing about it. Authors such as Roberson (2006) opines that the term diversity is gradually being replaced by 'inclusion', others conclude that diversity is almost synonymous to inclusion (see Davidson and Ferdman, 2002; Westcott,

© Eseigboria Grace Paula Ijasan, 2018

2006; Hill, 2009, Shore et al., 2010; Theodorakopoulos and Budhwar, 2015), some however see it as a concept that goes beyond inclusion (Sabharwal, 2014, Massey, 2013).
Rhetoric aside, it is seen that the discussions on diversity (and by extension, inclusion) are usually depicted as a change concept (Massey, 2013), staff retention, training, and human resource development (Escallier and Fullerton, 2009; Kormanil and Rajan, 2010), business success (French et Al., 2014; Bendick et Al., 2010; Downey et al., 2015), trust and engagement (Downey et al., 2015), crucial to economic and competitive success (e.g. Catalyst, 2004; Cox, 2001 (from Jonsen)). In the United States, diversity was largely a human resource management (HRM) function; limited to increasing the workforce representation of historically underrepresented groups (e.g., women, minorities) via recruitment and hiring practices. Earlier, Loden & Rosener [1991] define diversity as that which differentiates one group of people from another along primary and secondary dimensions. According to Henry (2007) and Arrendondo (2004), diversity refers to the co-existence of employees from various socio-cultural backgrounds within the company.

According to Patrick and Kumar (2002), diversity is a set of conscious practices that involve understanding and appreciating interdependence of humanity, cultures, and the natural environment; practicing mutual respect for qualities and experiences that are different from our own; understanding that diversity includes not only ways of being but also ways of knowing; recognizing that personal, cultural, and institutionalized discrimination creates and sustains privileges for some while creating and sustaining disadvantages for others; and building alliances across differences so that we can work together to eradicate all forms of discrimination. This includes cultural factors such as race, gender, age, colour, physical ability, social class, ethnicity, etc. Henry (2007) further added that there is a broader definition of diversity which may include age, national origin, religion, disability, sexual orientation, values, ethnic culture, education, language, lifestyle, beliefs, physical appearance and economic status. The concept of diversity also includes acceptance and respect. It means understanding that each individual is unique, and recognizing our individual differences (Patrick and Kumar, 2002).
In a 2014 SAP research titled 'workforce diversity has a new meaning', findings of which were based on a global survey of 228 HR executives in Europe, North America, Asia-Pacific, the Middle East, Africa, and Latin America, with 50% hailing from companies with revenues up to USD$500m and 25 percent have revenue of USD$5bn or more, it was reported that 83% of respondents place a high value not just on the capture of a diverse workforce, but also on the retention of the so called millennials.

© Eseigboria Grace Paula Ijasan, 2018

With all the different variables and attributes in the mix, and the multiplicity of views on what constitutes diversity, the working definition adopted by this research would be a combination of various authors. To this light, the conceptual and operational definition of 'diversity' in the context of this research is put as "an equal opportunity philosophy, which recognises a person's individuality and special needs in relation to any attributes they consider important to them". This is similar to how Maier (2002) explains diversity. Maier (2002) used 'dimensions' from the 'individuals' point of view and it saw that the level of importance attributable to each dimension would vary from person to person and from one circumstance to another. In the opinion of Jonsen et al. (2011), "diversity (from the point of view of the organization) refers to 'the composition of work units (work group, organization, occupation, establishment or firm) in terms of the cultural or demographic characteristics that are salient and symbolically meaningful in the relationships among group members'. These two views were aggregated and reintegrated into the conceptual framework in Figure 2.1 below.

Having discussed the concept of diversity and its ephemeral nature, this section managed to come up with a working definition. The next section further discusses diversity by looking at its dimensions and its benefits both to the individual and the organization with a diverse workforce.

2.2.2 Perspectives/ Dimensions of Diversity

Maier (2002) identified 38 possible diversity dimensions, whilst adding a caveat that the variable "character traits" is "infinitely expandable", thereby further affirming the subjectivity of the phenomenon. The Maier (2002) was further corroborated by Mazur (2010) who came up with a framework for the dimensions of diversity. Mazur (2010) reviewed diversity and the resultant dimensions from an individual's point of view. As shown in the table below, there are three key dimensions of diversity. These are primary, secondary and tertiary dimensions. According to Mazur, 2010, the primary dimensions include issues like race, ethnicity, gender, age and disability. The secondary dimensions include religion, culture, sexual-orientation, thinking style, geographic origin, family status, lifestyle, economic status, political orientation, work experience, education, language and nationality.

© Eseigboria Grace Paula Ijasan, 2018

The tertiary dimension focuses on matters such as beliefs, assumptions, perceptions, attitudes,

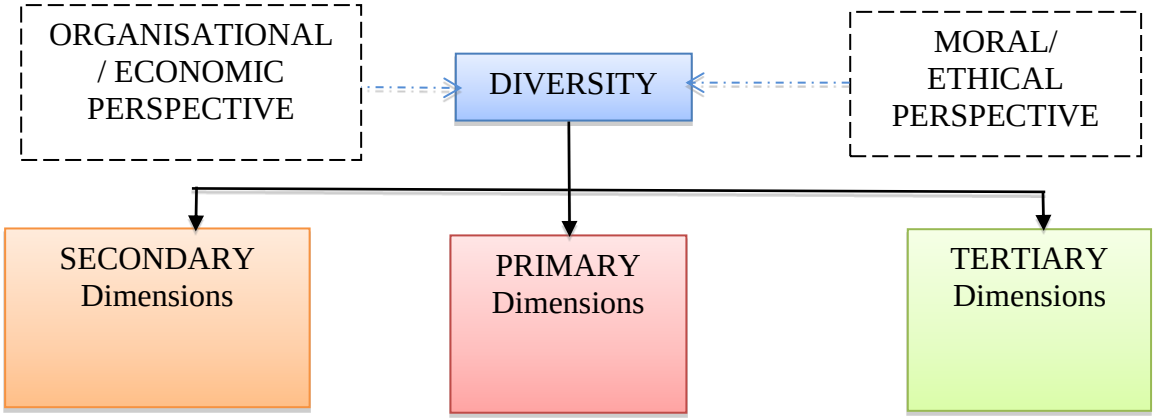

Figure 2.1: Conceptualisation of the Dimensions of Diversity
Source: Mazur, 2010 and Janssens and Steyaert, 2003

feelings, values and group norms. Figure 2 combines this with the findings by Janssens and Steyaert, (2003) which reviewed diversity from an organisation's point of view.

According to Kormanik and Rajan (2010), diversity has historically largely been a human resource management (HRM) function, limited to increasing the workforce representation of historically underrepresented groups (e.g., women, minorities) via recruitment and hiring practices in the US. However, as corroborated by Bendick et al. (2010), managing diversity centers on the premise that harnessing difference will create a productive workplace in which employees feel valued and their talents are used in the process of accomplishing organizational goals. Jonsen et al. (2010) also added that diversity management refers to a set of managerial actions aimed at either increasing diversity, and/or promoting amicable, productive working relationships. The concept of 'diversity management' is discussed in further details in section 2.2.1

Jean et al. (1999) referred to diversity as the degree to which a workgroup or organization is heterogeneous with respect to personal and functional attributes. According to Jonsen et al. (2011), "increased globalization, changes in workforces, and an increasing representation of minorities of all kinds has also fuelled the consideration that the diversity debate has moved beyond issues of legal and moral obligations to become an inevitable reality, both within and outside of today's organizations". Sabharwal (2014) agreed that the concept of organisational inclusion is the crux of the current diversity efforts even though there has been limited research on the empirical effect of organisational inclusion behaviours (OIB). Cox (1991); however, stated emphatically that 'organizations that fail to make appropriate changes to more successfully use and keep employees from different backgrounds can expect to suffer a

© Eseigboria Grace Paula Ijasan, 2018

significant competitive disadvantage compared to those that do'. Miller & Katz, (2002) on reaping the benefits of diversity for modern business innovation stated that:

"Tomorrow's successful organisations will be those that harness the collective and synergistic brilliance of all their people and not just an elite few. The stock-market starts will be the organisations that capitalise on the diversity of their workforce" *(*Miller & Katz, 2002, p.1)

2.2.3 Historical and contextual Changes in Diversity Management

Anand and Winters (2008) took a retrospective view of corporate diversity from 1968 – 2008 from a training point of view. Training has been seen as an important aspect of diversity as (Fegley, 2006) and Kormanik and Rajan (2010) found that 76% of U.S. organizations reportedly provide diversity training. Anand and Winters (2008) found that diversity as a term has become one of the most popular business topics and even as it is, it is still a controversial and less understood topic. Over a period of 20 years, they saw the term emerging from being a compliance and legislation centred initiative in the early 1960s and 1970s, to it becoming a matter of sensitivity in the late 1990s. They find that the current issue with diversity at this moment is the lack of effective measurement tools for the effect of diversity. According to these authors, the future of diversity would be a function of integration i.e. going broader and deeper and entrenching diversity into the core fabric of business strategies. This is similar to the findings by Kormanik and Rajan (2010) and Shore et al. (2010) who all articulated that although early diversity training focused on "the challenge of meeting the needs of culturally diverse workforce and of sensitizing workers and managers to differences associated with gender, race, age, and nationality in an attempt to maximize the potential productivity of employees" as depicted by Ellis & Sonnenfeld (1994), they further added that the focus of diversity training has evolved from compliance-oriented content (mid-1960s to early 1980s) to strengthening employee working relationships (mid-1980s to mid-1990s) to a more recent focus on integrating all aspects of diversity to improve organizational learning and performance.

From an academic point of view, Parham and Muller (2008) reviewed the discourses of workforce diversity (WD) within the US context to see how authors have been addressing it in organisational behaviour books. They found that although, many of the texts on the topic have

© Eseigboria Grace Paula Ijasan, 2018

some strengths, it was seen that there is need for improvement in the areas organisational system level.

To this point, diversity has been described in its various dimensions and the evolution of the term has been explored. The next section gives a review of the benefits of diversity, both to the individual and the organisation practicing effective diversity management.

2.2.4 Benefits of Diversity

Diversity can provide many potential advantages to organizations and individuals. Solebello et al. (2016) demonstrated that diversity considerations may emerge at all levels of analysis in associations – individuals, groups, organization and network. Diversity increases creativity and innovation, promotes higher quality decisions, and enhances economic growth because it spurs deeper information processing and complex thinking Galinsky et al. (2015). It is not all bloomy for the cases for diversity, Singal and Gerde (2015) found that family firms do not suffer significant financial losses due to their limited diversity management initiatives.

A school of thought says diversity helps organizations to reach out to diverse customer groups and markets (Bendick et al 2010; Bell, 2007, Dwyer et al 1998), and on another level by allowing for a variety of perspectives; it promotes innovativeness and superior work outcomes and performance (Cox, 2001). The assumed benefits of diversity to organizational performance are well documented, such as increased sales revenue, more customers and greater relative profits (Herring, 2009). This work agrees that there are many benefits of diversity; many of which are latent at the onset. Many organisations can embark on diversity management, with certain goals in mind, but may end up with residual and consequently unintended benefit.

Konrad (2003) proposed three basic arguments for the business case of diversity using cases from the US. According to the author, the case for diversity includes three basic arguments. First, a more diverse US labour force means that businesses desiring to attract and retain the highest quality talent will have to recruit from all demographic categories as the traditional white male demographic shrinks in relative size. Second, a more diverse US society plus a globalized marketplace means a more diverse customer base, and businesses that employ a more diverse workforce will garner market intelligence to help them sell to potential customers from a variety of cultural backgrounds. Finally, demographically diverse groups can outperform homogeneous groups on problem solving and creativity tasks because diverse groups contain a greater variety of information, experience, perspective, and cognitive styles.

© Eseigboria Grace Paula Ijasan, 2018

On 'employee retentions' as a benefit of diversity, statistics on HR Council Canada (2011) indicate that diverse employees are three times more likely to leave an organization than non-diverse workers because:

- They don't feel part of the organization
- They don't feel valued
- They don't feel they have an opportunity for advancement
- They feel that cultural barriers exist
- They believe a competitor is more likely to develop career paths for a more diverse range of employees

Galinsky et al. (2015) highlighted the benefits of two forms of diversity from the individuals' point of view i.e. the diversity present in groups, communities, and nations, and the diversity acquired through individuals' firsthand experiences. They concluded that diversity helps individuals, groups, and nations produce better decisions, more innovation, and greater economic growth.

A substantial part of this research aims to focus on the business cases of diversity rather than personal gains. To this light, the next section highlights condensed findings from literature sources of authors/ research agencies that have conducted meta-analysis of the benefits of diversity.

Taking a cue from Cox and Blake (1991), it is seen that effective management of diversity gives a company *competitive advantage*. The authors noted that cost, resource acquisition, marketing, creativity, problem-solving, and organizational flexibility are areas where sound diversity awareness can help a company thrive. McCuiston et al. (2004) stated that 'irrefutable measurable benefits' can be derived from properly implemented policies to promote diversity and that the most evident measurable benefits are improved bottom line, competitive advantage, superior business performance, employee satisfaction and loyalty, strengthened relationship with multicultural communities, and attracting the best and the brightest candidates. Subsequently, Innovation and Business Skills Australia (IBSA) (2014) noted the following benefits attributable to effective diversity management:

- Corporations with high executive and board diversity had returns on equity (ROE) an average of 53% higher than those with low levels of diversity, and earnings before interest and tax (EBIT) margins 14% higher.

© Eseigboria Grace Paula Ijasan, 2018

- Diverse teams (properly managed and trained) are better able to solve complex problems. One study of 28 teams found those that were heterogeneous solved complex tasks better than the homogeneous teams. They noted the diverse teams exhibited a higher level of creativity and a broader thought process.
- Diverse perspectives also lead to innovation. Corporations that drive innovation by leveraging the ideas and knowledge of their employees meet product revenue targets 46% more often and product launch dates 47% more often than industry peers.

It is evident from section 2.2 above that diversity management has a host of benefits and there is also empirical evidence to show these benefits. The next section now reviews the theoretical underpinning of this concept and how best to manage diversity.

2.3 Theoretical Background of Diversity and Inclusion

Whilst it is beyond the scope of this research to contextually distinguish between diversity and inclusion, it is deemed pertinent to explore both concepts for two reasons. Firstly, it is emerging from literature that there is a move from diversity to inclusion (Roberson, 2006; Wentling and Palma-Rivas 2000) and secondly, the concept of diversity is often tackled from the view of not having it, whereas inclusion is viewed from angle of its benefits (HR Council Canada 2011, Bilimoria et al., 2008). A key point of reference in doing this is Cox (1991) who extensively explored ways of integrating diverse individuals into organisations. Following up on Cox's idea has been the work of Bilimoria et al. (2008).

Given the political history of South Africa and the past issues with apartheid, this research reviews the social dominance theory as a proxy for understanding the concept of oppression. The concept of oppression has high complexity and theoretical issues (Abberley, 1987); and the theoretical underpinnings of it comes in many forms such as the social dominance theory, oppression theory anti-oppression theory, victimisation theory etc. Whichever term use, the basic are always similar. The key principle of the social dominance theory is premised on the basis that individuals are stratified by age, gender and group. At the heart of the notion of oppression and social identity is the notion of difference (Williams, 2012).

Sidanius and Pratto (2001) argues that intergroup oppression, discrimination, and prejudice are the means by which human societies organize themselves as group-based hierarchies, in which members of dominant groups secure a disproportionate share of the good things in life (e.g., powerful roles, good housing, good health), and members of subordinate groups receive a

© Eseigboria Grace Paula Ijasan, 2018

disproportionate share of the bad things in life (e.g., relatively poor housing and poor health). Social dominance theory states that stable inequality among groups is maintained in part through the use of disproportionate force against subordinate groups (Pratto and Stewart 2010). Empirical findings from literature supporting the link between SD and the tendency to promote policies that disadvantage low-status groups (Islam 2014).

Some of the main researchers in the social dominance theory are Jim Sidanius and Felicia Pratto; who compiled a rather simplistic list of core related theories of social dominance and presented them as being either Psychological model, Social-Psychological model, structural-sociological model or evolutionary models. Comparing these models, this research sees that the relational context of the social dominance theory to the SA situation is more social-psychological in nature.

Under the social-psychological model, there is Hubert Blumer (1960) group position model. The Blumer model states that when certain groups are in a state of power inequality or imbalance, the dominant group will pursue measures to maintain their hierarchal position over less powerful groups (Virley, 2013).

In describing the trimorphic structure of group-based social hierarchy, Pratto et al. (2006) concluded that societies producing stable economic surplus contain three qualitatively distinct systems of group-based hierarchy: (1) an age system, in which adults have disproportionate social power over children; (2) a gender system, in which men have disproportionate social, political, and military power compared to women; and (3) an arbitrary-set system, in which groups constructed on ''arbitrary'' bases, that is, on bases not linked to the human life-cycle, have differential access to things of positive and negative social value. Arbitrary-set groups may be defined by social distinctions meaningfully related to power, such as (in various contexts) nationality, ''race'', ethnicity, class, estate, descent, religion, or clan. However, this group position model can be further distilled into the 'realistic group conflict theory' (Trop and Molina, 2012). Nelson (2015) summarises the origin of conflict as when groups compete for scarce resources. According to Campbell (1965) as cited in Sidanius and Pratto (2000) the perception that one group's gain is another's loss translates into perception of group threat, which in turn cause prejudice against the outgroup, negative stereotyping of the outgroup, ingroup solidarity, use of group boundary markers and various discriminatory behaviours; otherwise referred to as defensive tendencies by Forgas et al. (2010).

© Eseigboria Grace Paula Ijasan, 2018

This is seemingly true for the South African situation where due to power differential as suggested by Dovidio (2010) that the privileged few were trying to hold on to power just out of fear that the resources and material benefits they enjoy will be taken away if other groups of people get included. This is arguably one of the key contributions of the BBBEE act as it allays the fear of all South African by reiterating that the inclusion of Black South Africans into the economy does not translate into the loss or exclusion of White South Africans.

2.3.1 Re-awakening of Diversity Management

The importance of the contingency approach of diversity cannot be over emphasised. The challenge on organisations to steer away from mere employee head count to strategic diversity management practices (Kinyanjui, 2013; Ulrich, 1997) is stemmed from the awareness that diversity plays an integral role in organisational performance by impacting on the effectiveness in its business operations {Giambatista, 2010; Guillaume, 2013; Kochan, 2003). According to Arrendodo, (1996, p. 2)

"*diversity management refers to strategic organisational approach to workforce diversity development, organisational culture changes and empowerment of the workforce. It represents a shift from activities and assumptions defined by affirmative action to management practices that are inclusive, reflecting the workforce diversity and its potential. It is ideally a pragmatic approach in which participants participate and plan for change, do not fear human differences or perceive them as a threat and views the workplace as a forum for individual's growth and change in skills and development with direct cost benefit to the organisations*".

In a similar but more subtle tone, is the view of Kandola and Fullerton (1998, p. 7) "*The basic concept of managing diversity accepts that the workforce consists of a diverse population of people. The diversity consists of visible and non-visible differences which will include factors such as sex, age, background, race, disability, personality and work style. It is therefore founded that on the premise of harnessing these differences will create a productive environment in which everyone feels valued, where talents are being fully utilised and which organisational goals are met".*

2.3.2 Reasons for Diversity Management in Organisations

Diversity management has been found to have contributed significantly to the effective achievement of organisational performance most especially among the SME's. Preceding sections have discussed some of the benefits of DM; however, in line with this, the European

© Eseigboria Grace Paula Ijasan, 2018

Institute for Managing diversity (2003) posited that several researches have tried to identify the reasons for diversity management. In order to harmonize the various reasons, this research summed them up in a model as shown in Figure 2.2.

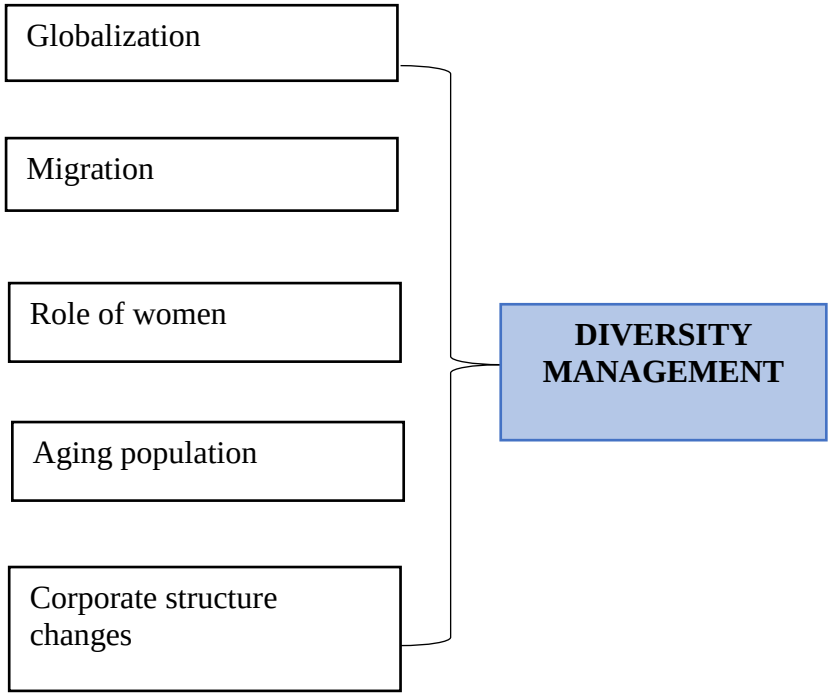

Figure 2.2: Reasons for Diversity management in organisations
Source: Author

2.3.2.1 Globalization

Before the emergence of globalisation there were barriers between market and countries with and outside Africa. According to Priyameet (2014) the emergence of globalization of business made diversity competency crucial for many organizations; except SMEs and Multinationals. Thus, globalization has not only enhanced the free flow of products and services, it has also encouraged the exchange of ideas, skills and human resources from every part of the world. In this regard, Ashton (2010) posited that globalization has increased the rate of interaction among diverse persons in the work environment which has resulted in alteration of several secondary digestions of diversity. Even though this seems to be a welcome development, yet it has become challenging for several organisations because of the emergence of new competitors, new market rules and market structure. Therefore, if these organisations must achieve high organisational performance, they must be able to effectively manage the existing diversity within the organisation.

© Eseigboria Grace Paula Ijasan, 2018

2.3.2.2 Migration

Another reason that has necessitated diversity management is migration. It would be observed that studying the trend of population all over the world, there remains unequal population distribution; a situation in which some nations of the world have increasing dependency ratio to working population. This is most common in Western Europe and Canada where the birth rate is ever increasing; the working population is low while the aging population is increasing. It is amazing how the government of these nations have 'flung open their national gates' with policies that support massive migration of labour. Even though these polices are aimed at labour market outcomes, the countries sometimes fail to consider how far these policies would aid their achievement of their overall migration aim at the long run (Engbersen et al., 2010). Engbersen et al., (2013) argued that the main reason why there is a consistent rise in immigrants was due to labour shortages and the search for skilled potential that is needed in attaining effective organisational performance. Incidentally, migration happens to be one of the factors responsible for the push and pull of labour all over the world. Nations that are well developed but lacking man power attract manpower from the developing nations. Similarly, Campbell (2013) argued that some European nations have so highly skilled and over-qualified man power in their labour market and this has led to the common problem of an increased rate of occupational segregation. Hence, migration became a potent tool for managing the alarming rate of occupational segregation. Since all this has constituted a reason for the increasing diversity in the nations and their organisations, it is expedient that measures be taken to manage the rate of migration to ensure effective management of diversity.

2.3.2.3 Ageing Population

Age constitutes one area of diversity. More so, the increase in the population of the aging has necessitated the restructuring of several organisational policies that allows the aged to remain in the organisation. This has consistently widened the age range for employees in several organisations thereby making it difficult to have a standard working age. Vickerstaff (2010) noted ageing population is a major reason for growing diversity in the work place because older workers are beginning to disregard the statutory retirement age because of the growing economic pressure they experience. According to Vickerstaff, a survey conducted on the ageing in Europe showed that after retirement, over 50% of the age still return to active service because of their growing need for a consistent source of income causing the diversity in terms of age to continue to increase indefinitely.

© Eseigboria Grace Paula Ijasan, 2018

2.3.2.4 The Role of Women

The 20th century ushered in the changing trend in the roles of women all over the world. This was coupled with the clamour for gender equality that took the centre stage towards the end of that century. However, recorded cases of the changing role have been on an increase in the 21st century as women are now competing favourably with men in their roles and are even performing better. In a survey conducted of firms in the United Kingdom by RSA, it was found out that, "women now play vital role which are similar to that of men and they even sometimes perform better than men" (Medland, 2012). The research found that women's roles in organisations were accompanied with empathy and intuition, which has enhanced their contribution to their various firms and has increased the firm's demand for them in recent times (Medland, 2012). This has necessitated a review of policies, rules and organisational processes to allow for these changing roles.

2.3.2.5 Corporate Structure Changes

It would be observed that establishing and sustaining business in the developing nation is easier and cheaper in terms of raw materials and labour. It was further explained in Globalisation and business (2013) that the variation in the cost of raw material, as well as establishing and maintaining a company varies all over the globe which implies that every rational organisation would prefer to take advantage of the nation with the lowest cost in order to maximize profit, reduce cost and increase access to cheap labour. This is one of the reasons why some multinationals thrive in developing nations. This has led to the relocation/establishment of several organisations in the developing nations which has further increased incidence of diversity among employees of all those organisations.

2.4 Approaches to Diversity Management

Over the years, researchers have developed various approaches to diversity management which has yielded varied outcomes (Ely & Thomas, 2001; McKay, Avery, & Morris, 2008).

2.4.1 Terminal Assimilation Approach

This approach views diversity as a terminal value i.e. a state in which "the desirable end states themselves, which individuals strive to achieve" (Rokeach, 1973). Simons (2002) later argued that this approach values diversity. It approaches diversity with the view of giving equal opportunity to all the groups, even though more emphasis is laid on women and other minority

© Eseigboria Grace Paula Ijasan, 2018

groups. This approach does not emphasize demographic differences. Supporting the Rokeach (1973) approach; Konrad & Linnehan (1995) noted that organizations that embrace terminal assimilation see their entire staff as equal even though there are deep seated differences. Their organizational policies apply to every employee irrespective of the sex, age, etc. The focus of this approach is to give equal leverage to all employees so that the minority groups can also develop their skills.

Supporting the argument in favour of this approach, Ely and Thomas (2001) argued that the terminal assimilation approach is an approach that prevents discrimination and upholds fairness because it effectively supports equality among diverse employees within the organisation. The Terminal assimilation approach is consistent with Ely and Thomas's (2001) "discrimination - and-fairness" diversity perspective.

Contrary to this argument, Martins & Parsons (2007) argued that this approach does not put business outcomes into consideration which can have a negative implication on the performance of the organisation in the long run. In addition to this, Martins & Parsons (2007) noted that this approach failed to consider the fact that giving all employee equal opportunity can eventually lead to potential stigmatization.

Hence this approach is explaining that in order to manage diversity, the minority group has to conform to the dominant culture of the organisation.

2.4.2 Terminal Integration

Terminal integration approach is an approach that is not actually common because it is not practicable in this contemporary society. It was practiced by the United Nations Educational, Scientific and Cultural Organisations (UNESCO) in 2010. According to UNESCO (2010) the approach sees diversity as a desirable end-state that requires the assimilation of the dominant group to be the non-dominate group. In the same vein, they posited that the approach, even though it encourages equality among all cultural groups, yet it advocates the need to use moral obligation as the basis of treating cultural groups. Since it is the majority that is required to conform to the culture of the minority, the approach suggests that there are limited challenges to the advancement of the minority within the organisation as against the terminal assimilation.

Contrary to this, some scholars argued that even though the approach sounds good and fosters diversity in organisation, it is difficult to practice it in any organisation. Furthermore, if this approach is eventually adopted there are great tendencies that it would generate negative reactions because of its rigid nature and because of the terminal assimilation approach which seems to provide a better approach. Since this approach assumes that the majority is assimilated

© Eseigboria Grace Paula Ijasan, 2018

by the minority's culture, the approach seems to forfeit the purpose of diversity which serves as the means to an end.

This approach is of the view that in order to effectively manage diversity, the minority group within the organisation should be allowed to absorb the dominant group which in reality is not really visible or achievable.

2.4.3 Instrumental Assimilation

Another approach to Diversity management is the instrumental assimilation approach. Despite the fact that this approach views diversity as an instrument of value, it does not relegate the conformity to organizational policies and standard to the background, because it ensures that the policies and practices are enshrined in the dominant cultural values. This is not to suppose that the organisation derived its fundamental objective from the diverse cultures that are within the organisations. Supporting the argument of this approach, Ely and Thomas's (2001) posited that this approach is consistent with "access-and-legitimacy" diversity perspective. Olsen & Martins (2012) further argued that the approach use women and other racial minority groups to penetrate the minority markets, this will not emphasize the differences, but rather it would encourage diversity, as well as boost the organizational outcome at all levels.

Therefore, this approach ensures that in order to manage diversity, both the cultural values and organizational polices have to be critically considered and an equilibrium reached so that the dominant culture is adequately supported without leaving out the minority culture.

2.4.4 Instrumental Integration

This approach is consistent with Ely and Thomas's (2001) "integration and-learning" diversity perspective. The approach argues that the differences in the minority group would be a focal point for any organisation to achieve their objectives. Similarly, Van Knippenberg et al., (2004) argued that this approach gives the organisations opportunity to harness diverse idea and initiatives for positive organizational outcome. This can only be possible when there is a constructive exchange among the diverse groups. A situation in which the employees take advantage of various cultural identities of the minority groups to penetrate their market.

This approach seems a little better since diversity will be better managed when the management take advantage of the minority group to reach the local market of the minority groups

2.4.5 Dual-value Assimilation

The dual-value assimilation suggests that diversity management is approached from two different perspectives. Dual assimilation in the context of terminal (end state) and instrument;

© Eseigboria Grace Paula Ijasan, 2018

this means that values are used as an instrument to achieve the organizational objectives. The approach emphasizes that the minority group must conform to the dominant culture of the organisation. Also, this approach emphasized that fair treatment of all groups so that all social, legal and moral responsibilities can be fulfilled.

In other words, what this approach is advocating is that there should be equal opportunity and fair treatment of all groups, most especially minority groups which is not to be at the expense of the organisation's outcome. This approach tries to strike a balance between the two seemingly- opposing views of the two approaches which are the terminal assimilation and the instrumental assimilation. This approach services the diversity as a major contributor to the overall organizational outcome and does not in any way relegate the differences among the employees to the background.

2.4.6 Dual-value Integration

This approach is similar to the previous approach to diversity management which was earlier discussed. But in this case the dual-value integration is a combination of the elements of two basic approaches; this approach includes Terminal integration and Instrumental integration. Kochan et al., (2003) argued that dual-value integration approach also views diversity as a terminal value where the instrumental integration approach does. Therefore, this approach would make it possible for the organisation to effectively combine two of the approaches mentioned above in order to ensure that both ends of diversity management that have to do with integration are adequately provided for.

Even though these approaches seem good, the ability to maximize it remain the sole responsibility of the management of the origination and other stakeholders involved.

The Figure 2.4 below further explains the approaches

© Eseigboria Grace Paula Ijasan, 2018

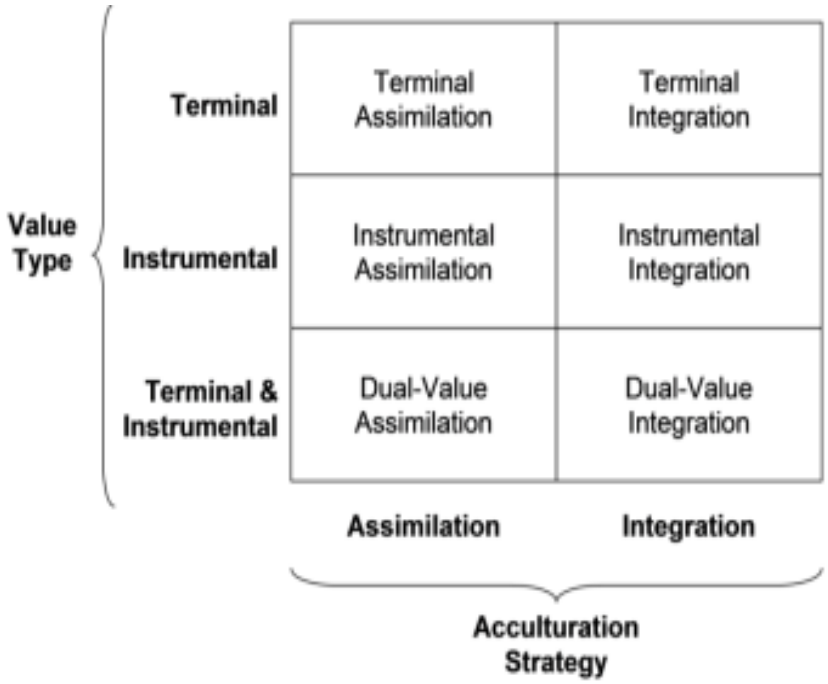

Figure 2.4: Approaches to Managing Diversity
Source: Olsen & Martins (2012)

2.5 Perceptions of Diversity Management

Over time, there has been various perceptions to diversity management. One of these is the perception of Arrendodo (1996) which gave an explicit distinction between affirmative action and diversity management by emphasizing a need for integrating values within the organisation in order to encourage equal participation by the participants as well as equitable distribution of organisational resources (Cottrill, 2014; Plummer, 2003). To have a clearer understanding as to the perceptions of diversity, Thomas and Ely (1996) identified three strategies or approaches to diversity: (1) discrimination and fairness paradigm, (2) access and legitimacy paradigm, and (3) learning and effectiveness paradigm. A brief explanation of these strategies is that with the discrimination and fairness paradigm an organisation's focus is on making the workplace reflect the society and goes further in setting up managerial procedures to ensure that employees are given equal treatment. The focus here is success in recruiting and retaining employees and not on the conditions that employees should be able to draw from personal assets and perspectives to do work more effectively. Employees in these organisations perceive the organisation to be blind to all dimensions of diversity making them less expressive of the unique differences. The access and legitimacy paradigm is executed by accepting and celebrating differences for the purpose of gaining access to the diverse clientele by matching the demography of the organisation to the critical consumers. The focus here is to aim for

© Eseigboria Grace Paula Ijasan, 2018

competitive advantage through market-based motivation and not analysing how these differences bring the competitive advantage. In this case, employees perceive themselves as having been professionally exploited. The learning and effectiveness paradigm on the other hand, refers to an "outlook on diversity that incorporates employees' perspective into the main work of the organisation and enhances work by rethinking primary task redefining markets, products, strategies, mission, business practices and culture" (Thomas and Ely, 1996). Podsiadlowski et al., (2013) noted that these paradigms refer to organizational members' normative beliefs and expectations about the reason to diversify, the value of diversity, and its connection to work. Furthermore, they also identified five diversity perspectives, which are*: Reinforcing Homogeneity, Colour-Blindness, Fairness, Access, and Integration and Learning*. In comparing the underlying logic between these diversity perspectives as proposed by both sets of authors, colour-blind and fairness paradigm are the same as the discrimination and fairness paradigm, access paradigm is the same as access and legitimacy paradigm, while integration and learning is the same as learning and effectiveness. Reinforcing homogeneity seemed the new paradigm that did not share the same logic.

According to Podsiadlowski et al., (2013), the reinforcing homogeneity paradigm agrees with Dass and Parker (1999) that, organisations not only ignore potential cultural differences but also reject cultural diversity in favour of a homogenous workforce. They put in place measures that may not simply ignore cultural diversity in the labour market and their organization but actively resist it. Having highlighted some of the different ways organisations view 'diversity' and how it affects their values and expectations of it as it relates to work, it becomes clear that there is a 'link' between organisational culture and diversity management. This 'link' supports Schein's (1996, p. 236) definition of organizational culture as "the set of shared, taken-for granted implicit assumptions that a group holds and that determines how it perceives, thinks about and reacts to its various environments". These shared assumptions exist at various levels, influencingemployees' attitudes and behaviours as it consists of collective values and beliefs (Schein, 2004). With a quick recap of Arrendodo's (1996) overview of diversity management it becomes even clearer that for diversity management to be successful there is a need to change or modify existing organisational culture with integrated values that allow for employee participation, commitment to work, improved performance as well increased organisational competitive advantage and performance; therefore, building a business case for diversity.

© Eseigboria Grace Paula Ijasan, 2018

In line with these assertions by Arrendodo (1996); Human (2005) noted that unsuccessful diversity management are often characterised by pronounced differences, splitting and preconceived notions or stereotypes about other groups (Out group), which are based on the primary diversity dimensions of race and gender. Hence there is need to develop a successful diversity management that is capable of facilitating cordial relationships between different people and groups (Cilliers & Terblanche, 2010), corroborating this, Watts (2009) noted that successful diversity management can only be built on cognitive understanding and the experience of emotional meaning making. It was in relation to this that Wheeler, (1996) posited that successful diversity management are usually "characterized by an integration of similar and different dimensions, and the understanding, accepting and valuing of differences in the self, and between the self and the other". This was why De Beer (1998) suggested that in any perspective, the variables of diversity must be adequately considered. These variables are summarised in the table below.

Table 2.1: Diversity Management Approach Variable

Variable	Managing Diversity
Goal	• Creation and management of diverse workforce • Establishment of quality interpersonal relationship • Full utilization of human resources
Motive	• Exploration of 'richness' that can flow from diversity • Attainment of competitive advantage / effective service
Primary Focus	• Understanding, respecting and valuing differences • Creating an environment appropriate for full utilization (culture and systems) • Inclusion of white males
Benefits (Primary)	• Mutual respect among groups • Enhanced overall management capability • Natural creation of diverse workforce • Natural upward mobility • Greater receptivity to Affirmative Action • Escape from frustrating cycle • Sustained benefits
Challenge	• Require long-term commitment • Requires mindset shift • Requires modified definitions of leadership and management • Requires mutual adaptation by company and individual • Requires systems change

Source: De Beer (1998)

© Eseigboria Grace Paula Ijasan, 2018

In the light of the reviewed literature, this research takes on the position that diversity management initiatives should not be a one-size fits all (Joplin and Daus, 1997) as success of its implementations is dependent on the culture of the organisation. This is true as observed in the history of diversity in USA. Ferner et al., (2005) in Dijk et al., (2012) noted in their research that in America, early advocates for diversity based their argument on moral reasoning that discrimination should be illegal as it involves the exclusion of individuals based on their demography or even non-task related characteristics. So, this led to Equal Employment Opportunity (EEO) and Affirmative Action (AA) policies and programs in the 1960s, which proved to be effective means to increase the representation of minority groups in the workforce (Crosby et al., 2006; Dijk, 2012). It is pertinent to note here that EEO and AA policies were introduced due to the growing concern by organisations about characteristics that spells workplace discrimination such as age, sex, race and physical disabilities. Similarly, Coetzee (2007) observed that this diversity policy evolved as a means of redressing issues relating to social and cultural backgrounds, religious practices, rites of passage according to ethnic or religious roots, perceptions about politeness, social correctness, generosity and time, languages, dietary laws, dress codes, cultural taboos, etc. Also, Pretorius (2003) pointed out another related aim of the policy which summarizes the above outlined reasons to ensure work environment discrimination-free and to promote the underrepresented groups. There was however, little concern for non-visible attributes like personality, political background and functionality.

However, in the 1980s, several researchers noted the negative consequences of EEO and AA programs (Gilbert et al., 1999; Dijk et al., 2012; Litvin 2006). Some of the negative consequences pointed out included job insecurity, backlash effects for the beneficiaries of AA policies, anti-affirmative action groups, and law suits involving reverse discrimination initiated a decline in EEO and AA policies (Kelly and Dobbin 1998). A similar reaction was also observed by Booysen (2006; 2007) in her research about the changing social identities in South Africa. She acknowledges that South Africa is a diverse society with many identities imbedded in its societal fabric and has race, gender, ethnicity and language as its most salient identity groups. However, with the history and legacy of apartheid deep rooted in the minds of leaders, employees and management, organisations tend to operate within the discrimination and fairness paradigm (Ngambi, 2002). This limits the implementation of diversity initiatives to hiring quotas (Booysen, 2007). Booysen argues further that in view of the above, social identity

© Eseigboria Grace Paula Ijasan, 2018

conflicts evolves as a result of prototypical perceptions of non-group and group members which she illustrated with the quotes below (Booysen, 2006; 2007, p.14):

- Black comments about whites' perception of blacks*: "[They act as if] you have been accepted in an AA position and therefore you are not totally competent to handle the responsibilities of the job"; in other words, whites perceive blacks as incapable, even if they have skills, experience, degrees etc. This perception must be broken down.*
- White comments about blacks*; "PDI's (previously disadvantaged individuals) get appointed and promoted above their ability – then we have to report to them, while doing the work."*

It can be observed therefore, that like in America, there is reverse discrimination on the majority and a backlash effect on beneficiaries of diversity initiatives centred on specific aim of depolarisation and empowerment of the PDI's within organisations. It also explains why Stone and Horwitz (2003) advise that policies designed to intervene in sensitive issues like unfair discrimination must be careful to note the degree of convergence and divergence of implementation strategies. This study therefore describes the above situation as managing diversity. For the purpose of this research, the operational definition of managing diversity would be "*acknowledging the existence of a diversified workforce within an organisation and setting up managerial procedures to promote equal opportunities for all with the sole aim of being morally and politically correct which can also be termed Quantitative Diversity Management"*. Hence this leads to the proposed new approach to diversity underpinned by the fostering diversity logic called Qualitative diversity management.

2.6 Diversity of Africa

African management has become an issue of public concern which has attracted the attention of scholars on possible ways of effectively managing its diverse cultural heritage and individual differences. According to Duze (2012), issues relating to African management began in the pre-colonial era because it was at this period that the African society was characterized by large empires which comprises of different ethnic groups some were identified as single ethnic group because of their population e.g. Banyoro and Baganda (Uganda), Hausa-Fulani (Nigeria), Ashanti (Ghana) and Amhara (Ethiopia), which supported the values of the African society as well as strengthened the traditional social relations within the various social institutions which were dominant at that time.

© Eseigboria Grace Paula Ijasan, 2018

Hence, the traditional social relations that were fostered at the pre-colonial period was gamine to the sustenance of African values. Contrary to this, the colonial masters opined that the traditional social relations did more harm than good in Africa because it has hampered the overall development of Africa, most especially, its economic development. It is obvious that the African society in the pre-colonial era was centred on Emile Durkheim (1973)'s Mechanical Solidarity theory; one in which limited emphases was made on diversity.

Amazingly, the colonial era ushered in the strong consciousness of diversity which trailed several noble organisations in recent times. This has led to pronounced discrimination, xenophobic sentiment, etc. in several nations in Africa, notably in South Africa. Corroborating this, Duze (2012) argued that even though the colonial masters seem to refer to the African culture which supports tolerance, unity in diversity at all levels as "primitive", yet their effort at ensuring strongly rooted modernization through globalization seems to compartmentalize the African society thereby straining the pact of brotherhood, making it increasingly difficult to manage diversity.

Any time diversity is mentioned in the African context, the general public seems to paint the image of several ethnic groups (Duffield, 2008). This seems to be true because presently the diversity in Africa seems more obvious when taking an inventory of the ethnic groups that made up each of the nation. For instance; according to the Central Intelligence Agency (CIA) 2007, the most populous country in Africa and one of the most prominent countries in West Africa, which is Nigeria, has more than 250 ethnic groups all with different cultures. A more critical look at the composition of the ethnic diversity in the nation as presented in CIA (2017) showed that in order to manage the threat of this vast ethic group, the country has adopted the use of major ethnic groups in which; Hausa and Fulani 29%, Yoruba 21%, Igbo 18%, Ijaw 10%, Kanuri 4%, Ibibbio 3.5% , Tiv 2.5% etc.; similarly, CIA (2017) also reported that the case was not different in Zambia, where the total population was made up of Bemba 21%, Tonga 13.6%, Chewa 7.4%, Lozi 5.7%, Nsenga 5.3%, Tumbuka 4.4%, Ngoni 4%, Lala 3.1%, Kaonde 2.9%, Namwanga 2.8%, Lunda (north Western) 2.6%, Mambwe 2.5%, Luvale 2.2%, Lamba 2.1%, Ushi 1.9%, Lenje 1.6%, Bisa 1.6%, Mbunda 1.2%, other 13.8%, unspecified 0.4%. Also, CIA (2017) reported that in Kenya the total population is made up of Kijuyu 22%, Luhya 14%, Luo 13%, Kalenjin 12%, Kamba 11%, Kisii 6%, Meru 6%, other African 15%, non-African 1%. The case was not different in South Africa, where the total population was 80.2% black African, 8.4% white, 8.8% colored, 2.5% Indian/Asian (CIA Report, 2017).

© Eseigboria Grace Paula Ijasan, 2018

Despite the fact that this report is similar in almost all African countries, Kreiter and Kinicki, (2007) explained that diversity seems to have gone past mere ethnicity and culture to encompass sexual orientation, values, personality characteristics, education, language, physical appearance, marital status, lifestyle, beliefs and background characteristics such as geographic origin, tenure with the organisation and economic status within the boundaries of Africa as previously perceived. Therefore, proper measure needed to be put in place to manage diversity at all cost in this recent time since the scope has expanded (Triandis, 1994; Kreiter and Kinicki, 2007).

Corroborating this statement, Beugre and Offodile (2001) posited that since Africa has been characterized by diversity, their capacity to resist or accept change becomes unpredictable because colonization has greatly contributed to their growing differences which have influenced the people's perception, lifestyle, etc.

In order to expand this argument, literature has established that all corporate organisations have had to deal with issues relating to cultural diversity at various levels within the organisation, most especially in the area of employment, training and capacity development and compensation (See: Thomas, 2002; Ramgoolam, 2005; Pietersen, 2007; Oosthuizen & Naidoo, 2010). According to Nel, Kisten, Swanepoel, Erasmus and Poisat (2008), the prevailing level of discrimination in several organisations has become very alarming in recent times approaching the issue from the negative side. To effectively harness the opportunity embedded in diversity, African government and organisations have developed a couple of initiatives in order to effectively manage diversity: Affirmative Action (AA), Employment Equity (EE) and Broad Based Black Economic Empowerment (BBBEE); teambuilding exercises and culture sensitive or responsive workshops (Robbins, 2001). But for the purpose of emphasis, the focus would be on government initiatives.

In a bid to address the various challenges posed by diversity in Africa, most especially South Africa, government have developed a couple of transformational initiatives. Three of those transformational initiative; Affirmative Action (AA), Employment Equity (EE) and broad based black economic empowerment (BBBEE) (were mentioned in Uys, 2003; Oosthuizen and Naidoo 2010; Janse van Rensberg & Roodt, 2005). Although they all presented their arguments differently, yet their argument supported the initial work of Cox and Blake (1991) that the three government initiatives were fundamental to addressing the issues of diversity in Africa It

© Eseigboria Grace Paula Ijasan, 2018

should be noted that the formation and implementation of these policies were not without flaws, yet the focus should be on whether the initiative was able to achieve its main purpose or not.
Yousef (1998) also argued that although the policy developers and implementers are very important, there is a need to also focus on the subjects who bear the burden of the policy. Yousef (1998) noted that since the subjects were at the receiving end of the policies, it is essential for government to reconsider the aim of these policies as well as their implementation processes. This becomes necessary because the degree of the effect may not be collectively ascertained since there are no collective way of responding to change even though one thing is very certain, it would either affect the work life of the subject positively or negatively, thereby altering the laid down structure of work/family responsibility.
Supporting this claim, Janse van Rensburg & Roodt, (2005) opined that the subjects should not be taken for granted because no initiative is without pain and stress. Therefore, in order to ensure that the initiative is impactful, the aftermath of its implementation should guarantee higher commitment. But the only way to guarantee their commitment is to ensure less pain and stress which is a relative term in any organisational setup. To this end, some of the key initiatives either developed or adopted by Governments in Africa are discussed below.

2.6.1 Affirmative Action Initiative (AA)

The Affirmative Action Initiative was the first out of the three initiatives to be introduced by government. The initiative was introduced amidst the tension of discrimination which was prevalent in South Africa. The aim of this initiative was to eradicate the prevailing discriminatory practices in various sectors of nation and to empower certain category of persons who have been victims of discriminatory practices. Thus, Kemp (1992) posited that the aim of the initiative was basically to redress the prevailing state of imbalances which has resulted from the past political history of the nation. Similarly, Uys (2003) opined that Affirmative Action Initiative is a potent policy that was developed in order to effectively fix diversity in the workplace system. Even though other policies were embedded improvement on this, yet it remains a significant one.

Uys (2003) noted that sequel to the fact that the initiative was developed for redressing the prevailing state of imbalances which has resulted from the past political history of the nation as noted by Kemp (1992) the initiative was also capable of fixing diversity in the workplace and facilitating diverse work force at all organisational levels without having any side effect on the employee (Uys, 2003). The presiding explanation on the purpose of the initiative was

© Eseigboria Grace Paula Ijasan, 2018

not different from that of Fuhr (1994) that affirmative action was aimed at "creating a diverse workforce that is a reflection of the society in which it operates". In addition to this, Fuhr concluded by saying that Affirmative Action Initiative is intended to be prompted by "moral, business and political pressures aimed at redressing the past injustices that have resulted in deliberate exclusion of certain groups". Similarly, Deane (2005) defines Affirmative Action as "the collection of measures that allocate goods, jobs, promotions, public contracts, business loans, and rights to buy and sell to a designated group, for the purpose of increasing the proportion of members of that group in the relevant labour force, entrepreneurial class, or university student population, where they are currently underrepresented as a result of past or present discrimination".

All of these definitions were in consonance with the Employment Equity Act of 1998 (Act 55 of 1998) where Affirmative Action was defined as the "corrective steps used in the creation of an equitable environment, specifically for those people who had been historically disadvantaged because of discrimination". Herholdt & Marx (1999) provided a focus for the affirmative action policy which focus on five main elements which include equality, correcting historical injustices, empowering the disadvantaged, developing members of disadvantaged groups, and managing of a diverse workforce.

However, from all these definitions that were examined, only two captured the various steps or actions that were embedded in the initiative and this formed the basis of Wessels's argument. Wessels (2008) argued that the element that makes up the initiative is equally as important as the overview of the initiative. Thus, the initiative is a combination of public policies, laws, executive order and court orders that practically promotes diversity, equity and fair practices. Hence, they are not just a mere initiative but rather the foundation of other initiatives which is a veritable tool for promoting justice in the face of injustice and inequality that has been experienced over time. This is because it is a tool that bridges the gap between the past and the present of any society that is characterized by diversity.

The attitude towards a group was what necessitated the enactment of the incentive. In line with this, several studies (Norris, 2001; Vermeulen and Coetzee, 2006; Burger and Jafta, 2010) argued that affirmative action is significantly related to perceived discrimination which is evident in people's attitude towards other groups. This perceived discrimination which was evident in attitude of one group (Whites) towards another (Blacks) necessitated the government to put in place the Affirmative Action Initiative. Supporting this, Coetzee and Bezuidenhout

© Eseigboria Grace Paula Ijasan, 2018

(2011) summated that the reason for establishing this policy was to effectively address the series of imbalances that has emerged from the past as a result of the apartheid period experienced in some African nations, most especially South Africa.

However, the policy advocated for fairness of opportunity enactment, fairness of moderate minority preference and fairness of higher minority preference among others. This was well supported in Greybe & Uys (2001), where it was argued that affirmative action effectively supports the eradication every policy challenge relating to equity and fairness among groups, most especially the employees. But still yet there has been growing concern on whether the policy has been able to achieve this aim via public policies, laws, executive order and court orders that practically promotes diversity, equity and fair practices. Explaining this further, Bezuidenhout (2011) mentioned that there is a growing concern on the effectiveness of the affirmative action initiative because despite its advocacy for fairness and equity, several organisations still grapple with enormous challenges when trying to conform to the status quo, they eventually comply by getting the appropriate numbers of employee as stipulated by the Policy who, more often than not, are less qualified for the position of authority to which this policy has recommended them.

Based on this, managers have continued to argue that the policy is lopsided. Collaborating this, Wessels (2008) posited that "all the processes of affirmative action permit that organisations find the equity balance between employees with is not so visible". This, according to Wessel, is very wrong because it is injustice to allow the disadvantaged employee to compete with the advantaged employee on the same platform because of a policy that has less regard for skills and competence. This was also supported by the findings of Burger and Jafta (2010) that the affirmative action policies had marginal effect on the reduction of the employment or wage gaps. The finding further indicated that their affirmative action policy has less significant effect on changes in labour market outcomes.

Thus, it can be concluded based on their positions that affirmative action is only effective at supporting a few individuals from the designated groups, most especially those that possess the right skills and education and have already ascended the height. This further implies that the policy effectively supports just a few members of the group it intended to support compared with those that are not skill or educated who constituted the larger percentage of the group. Therefore, the policies have only been able to impact a few categories of the disadvantaged.

© Eseigboria Grace Paula Ijasan, 2018

Similarly, Wessel's (2008) argued that it is time to reconsider the effectiveness of the affirmative action because it is almost becoming an inappropriate tool in managing the present challenges because it seems that the present situation has outgrown its strategies. However, saying that AA is no longer relevant must have been an understatement because it is still in operation in some parts of the world and the only thing that has been done is to improve on it.

2.6.2 Employment Equity

Employment Equity was another transformational initiative that was embarked upon by the South African government shortly after 1994 which steamed out of the Affirmative Action. According to Leonard & Grobler (2006) the aim of the policy was to ensure that all the organisations have equal representation of the citizens thereby transforming the overall outlook of the organisations. It was in a bid to achieve this that the Government introduced the *Employment Equity Act 55 of 1998* which was aimed at ensuring that all organisations complied with the employment equity that was indicated in the section two of that *Act*. Here, the policy demanded that the empowerment of blacks would not be based on the discretion of the management of any organisation, but rather they are to follow the federal government stipulated percentage/procedures. In addition to this, the policy was meant to eliminate every iota of discrimination that is 'deep seated' in the management system of the organisations.

Reacting to this policy, Rensburg and Roodt (2005) opined that the main reason for introducing this policy was to ensure equal employment opportunity and the fair treatment of all citizens. In order to achieve this, specific measures were further put in place to create a better platform for blacks, women, the designated group and the disabled to compete with their counterparts. In a bid to lend credence to term 'black' as implied in the Act as observed by Rensburg and Roodt (2005), Oosthuizen & Naidoo (2010) posited that the term black in the context of the act does not necessarily refers to just any black person in Africa, but basically, it refers to coloured people, Indian people and South African-born Chinese people.

The aim of the initiative was to produce a more productive workforce, through adequate training and motivation, in order to make the best brains and hands available to the organisations so that the effectiveness and the productivity of these organisations can greatly increase (Republic of South Africa, 1998). While assessing the effectiveness of the initiative, in South Africa, some scholars have argued that the policy has not achieved its purpose, just as they raise similar arguments in the case of Affirmative Action (AA). Thomas and Robertshaw

© Eseigboria Grace Paula Ijasan, 2018

(1999) noted that before even considering whether the policy is effective or not, rapt attention needs to be paid to the viability of the policy. Thomas and Robertshaw (1999) further argued that the implementation of the policy is likely going to face four major challenges which include:

- That the concept of "suitably qualified" is not well explained by the policy; hence, if the employers are to comply with the supposed definition of suitably qualified employee, this requires expertise as against the demand of the policy which overrides race, gender and disability (Thomas and Robertshaw, 1999).
- Secondly, if the policy is to be achieved, it would be at the expense of the employer because they would end up incurring indirect cost for training and retraining, hiring, etc. the ill-equipped employees they have shortlisted and if they are to get the best among them they need to expend more which would be time consuming. This is therefore not too healthy for any organisation if they must achieve optimum performance and be able to compete favourably with others.
- The third issue raised by Thomas and Robertshaw (1999) which would also be a challenge to the implementation of Employment Equity was that race classifications will be heightened while reverse discrimination will eventually lead to a massive decrease in level of employee loyalty. This will in turn reduce the rate of skilled employee's retention, majorly among the white males. Therefore, they further concluded at this point again that this policy is capable of leading to the shortage of skilled personnel.
- Lastly, they noted that "those from designated groups, expecting secured positions, may adopt a culture of entitlement that undermines initiative, self-confidence and self-reliance" which possess serious threat to the national development and the organisational good.

Smit (2013) had a slightly contrary opinion the argument of Thomas and Robertshaw (1999) which had already flouted EE before it was introduced. Smit (2013) argued that there was no policy without weakness, but instead of giving a surface argument on the weakness of the policy it would have been better for him to have established the fact that the policy had conceptual and application challenges for which there have been other policies that have been put in place to manage the crises. Smit (2013) further argues that "… labour law in itself cannot address the problems facing a highly unequal society such as South Africa."

© Eseigboria Grace Paula Ijasan, 2018

These challenges identified were further strengthened by the findings of the research conducted by Oosthuizen and Naidoo (2010) showing that the Employee Equity Act 55 of 1998 seems to be less effective because both the previously and non-previously disadvantaged groups are still experiencing prejudice in the work place after 16 years of implementing the policy.
But even at that, it still emerged that a sector like the banking sector in South Africa, which has 250,000 employees and manage more than R8-trillion in assets, is vital for providing funds for investment, enterprise and infrastructure development, and the housing market is the least transformed sector of the South African economy. As reported by Linda Enson in the March 13, 2007 edition of the South African Business Day, this assertion has been exasperated by the Black Business Council (BBC) who pointed to the lack of black ownership and the difficulty black entrepreneurs experience in obtaining loans within the SA financial sector.

2.6.3 Focus of the Broad Based Black Economic Empowerment Act

The Broad Based Black Economic Empowerment (BBBEE) Act is another government initiative that was designed to improve the imbalances in South Africa; this was founded on Black Economic Empowerment Act No. 53 of 2003. The four major aims of BBBEE include:

- Achieving an integrated and coherent socio-economic process;
- Incorporating BBBEE into the country's national transformation programme;
- Encouraging substantial and equitable transfer and conferment of the ownership, management and control of South Africa's financial and economic resources to the majority of its citizens in order to redress the imbalances experienced in the past
- Ensure popular participation of the black people in the economy of the nation (FW de Klerk Foundation, 2006).

In a bid to achieve this aim, the elements and component of the Initiatives were identified below each carrying their percentage weight.

© Eseigboria Grace Paula Ijasan, 2018

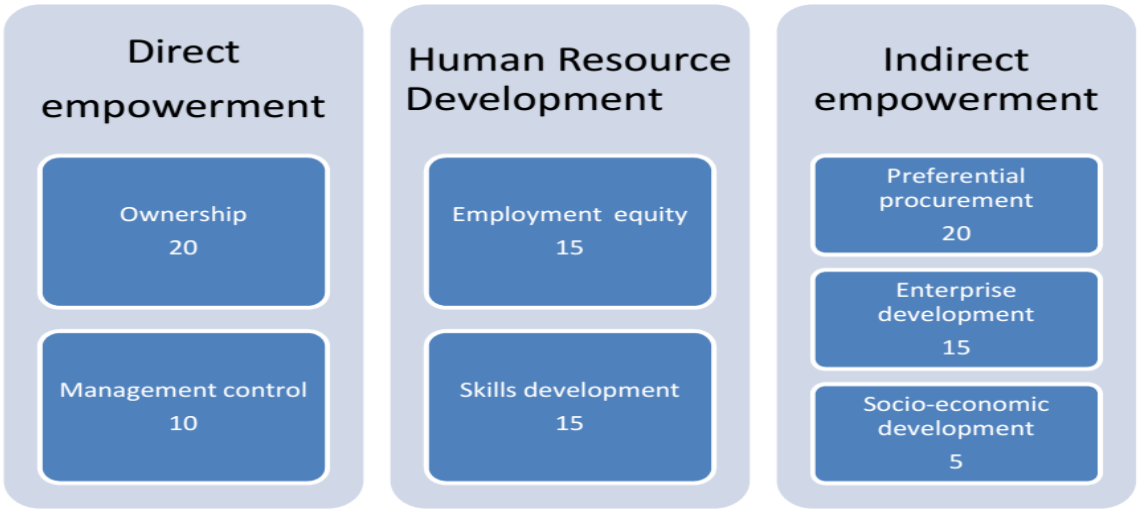

Figure 2.5: The component, element and weight of the BBBEE
Source: Adapted form Department of Trade and Industry (2003) and Jack (2007)

Several scholars (Dekker 2004; Mason and Watson 2005; Jack, 2007) have critically examined the seven components and elements of the BEE in line with the expectation of the government. However, the seven elements were categories under three main components of BEE as identified by Department of Trade and Industry (2003). The department noted that their BEE is made up of three components which included: Direct Empowerment, Human Resource Development, and Indirect Empowerment. These components are discussed below:

2.6.3.1 Direct Empowerment

It was noted by the Department of Trade and Industry (2003) that the major ways to achieve direct empowerment of the people was through ownership and management control. Emphasising two elements under the component, Mason and Watson (2005) note that the only two ways to achieve this is through Ownership (OS) which should weigh 20% of the total BEE score which invested the voting and economic rights in the hands of the black people and the other one Management Control (MC) which also weigh 10% which give opportunity for the blacks to be occupy the senior or executive level of management as well as major decision makers in any organisation.

2.6.3.2 Human Resource Development

Also, in line with the component as identified by the Department of Trade and Industry (2003) emphasising human resource development as another major component of the initiative, are employment equity (EE) and skills development (SD). Explaining the two major elements under the components, Dekker (2004) noted that Employment equity (EE) contributes 15% to the BEE. It would ensure that black individuals and women either skilled or unskilled are

© Eseigboria Grace Paula Ijasan, 2018

employed. Discussing the second element, Jack (2007) posited that skills development (SD) makes up another 15% of the BEE. What it entails is that adequate provision is given for the blacks to learn and develop their skills

2.6.3.3 Indirect Empowerment

The last components that were identified by the Department of Trade and Industry (2003) is the indirect Empowerment. This component contained three different elements which were also noted by Balshaw and Goldberg (2008). Balshaw and Goldberg (2008) pointed out that the preferential procurement (PP) amounts to 20%, which is only accessible when the individual (black people) trade with accredited BBBEE firms. Similarly, they noted that enterprise development (ED) carries a 15% which is only accessible by investing financially into the development of any Micro Enterprise. The last element, social economic development (SED) carries the remaining 5% and it emphasises that the social interests of the black community outside the firm should be well supported.

However, even though all these goals and the strategies to implementing the initiative seem laudable, yet its success has been hampered by a couple of factors. According to Beall, Gelb & Hassim (2005) the policy was not well designed to accommodate the emerging market crisis which exposed the unsustainable financial structuring of most BEE deals thereby resulting to massive reduction of the black ownership on the Johannesburg Stock Exchange (JSE). Even though this policy was able to achieve some measure of success, the sustenance strategy was poor and as such it collapsed. In line with this, Mandla (2006) noted that this led to the collapse of several black empowerment companies. In light of the review of the above goals this study proposes that one can assume that it is important to get a more up to date perception of the implementation of the BBBEE. This will not only provide empirical evidence of its social perception but will avail the government the opportunity to evaluate current implementation procedures. Having discussed the concept of BBBEE which is another government initiative designed to improve the imbalances in South Africa, section 2.7 discusses fostering diversity.

2.7 Fostering Diversity

A common ground among researchers for the term diversity is that it is concerned with differences between people (individual/personal/human differences). Past conceptualisation of diversity into personal attributes like race, gender, ethnicity, age, language etc. by researchers such as Pfeffer (1983) can be considered limiting and flawed as it reduces individuals into certain categories (Maier, 2005). This is because humans have numerous attributes that differentiate them hence, diversity should be conceptualised more broadly. The trend in

© Eseigboria Grace Paula Ijasan, 2018

research suggests the growth in the number of diversity elements. These myriads of human differences range from group memberships (based on identity and on organization), such as race, gender, tenure, or functionality, to more idiosyncratic characteristics, such as political background, military experience, or weight (Christian et al., 2006). For instance, Rijamampianina & Carmichael (2005) identified no less than 38 viable personal attributes. However, Booysen (2007) opines that unlike in the past, in South Africa, membership of a racial group now tends to be based on self-perception and self-classification not on legal definitions. Arguably, these legal definitions will still be preserved for the smooth implementation of diversity policies like the EE, AA and BBBEE. Irrespective of these classifications, what is quite natural is that, members of social identity groups tend to seek out their own in gathering e.g. church, school, social clubs and workplace (Booysen, 2007). The focus of this study is on the workplace because according to Nkomo (2006) and Booysen (2007) it is the most heterogeneous institution in the South African context and may be the only instance contact is made across the lines of different social identities.

In order to understand how the human behaviour is affected by social identity, Turner and Giles (1981) put forward the Social Identity Theory (SIT) which holds that individuals tend to classify themselves and others into social categories and that these classifications do have significant effect on human interactions. This can also be called stereotyping where individuals label themselves and others into social categories (coloured, blacks, white etc.). The authors expatiate that this interaction forms the psychological basis of group behaviour and association as well as intergroup discrimination which is comprised of three elements. They are: categorisation (labelling self and others into categories by way of describing people), identification (associating with specific groups to boost their image) and comparison (having favourable bias to groups they belong to in comparison with other groups). This means that people identify with groups that exist in specific relation to one another and not because of the inherent group characteristics (Abrams, 2010). Tajfel and Turner (1979) explained further using the self-categorisation theory that social categorisation provides a self-definition process that defines features and attitudes for each category and these features become the definition of self. It also explains how some social identity groups become more or less salient in different contexts (Booysen, 2007; Ngambi, 2002).

In the South African context, the social construct creates social categories and this according to SIT influences the action of individuals in defining the attraction of similarities based on ethnicity, gender or race. In addition, going by the self-categorisation theory (SCT), perception of others and re-personalisation of self can occur as a result of an evolution of the social

© Eseigboria Grace Paula Ijasan, 2018

identity. This process is the same for group behaviour. A simple example to explain this logic is a situation where the minority group within an organisation is empowered with policies, a resultant outcome is the majority group becoming less salient as in the situation of Miljoy group Finland. A comparable situation is also where the organisational culture does not have integrating values that are open to diversity; frequent occurrence of social identity conflict will be the outcome. This has led to a constant battle for which social identity should be more salient than the other. Wooten (2008) in her study about breaking barriers for the purpose of inclusion, added that because the set of employee behaviours, attitudes, and relationships have the potential to generate valuable capabilities that contribute to an organizational effectiveness and competitive advantage, it requires more intangible aspects of human resource management that include building a culture to support organizational initiatives. Some other authors talked about the importance of an inclusive culture especially in conjunction with competent leadership as a prerequisite for successful diversity management (Cottrill et al., 2014; Cox, 2001; Podsiadlowski et al., 2013). Bernardi & Detoni (2009) earlier highlighted in their study of managing cultural diversity that the presence of integration values in the organisational culture is the fundamental requirement to successfully implement diversity management. This explains why Horwitz and Jain (2011) advise those policies designed to intervene in sensitive issues like unfair discrimination must be careful to note the degree of convergence and divergence of implementation strategies. Where the foundation of the inclusionary policies may be conceptually similar, implementation procedures may greatly differ (Combs & Nadkarni, 2005).

It is with this understanding of the SIT and the Self-Categorisation theory that this study infers qualitative diversity management will be such that incorporates managerial processes that considers these three elements: the organisational culture, integrating values to assist the implementation process and assess the level of leadership competence necessary to lead the diverse workforce. It is only with the application of these key elements that diversity can then be fostered. Fostering diversity would therefore mean a distraction from considering the ethical imperative of creating and maintaining a demographically diverse workplace by valuing the positive potential of diversity that can be gained from the increased variety of personal viewpoints, skills, and knowledge available to an organization

© Eseigboria Grace Paula Ijasan, 2018

FRAMEWORK FOR FOSTERING DIVERSITY

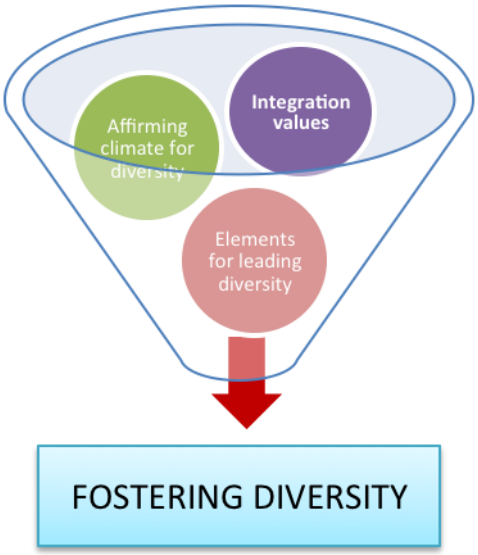

- Organizational identification
- Climate for innovation
- Psychological empowerment
- Equal access
- Equal treatment
- Identity freedom
- Turnover intentions

(Chrobot-Mason & Aramovich, 2013)

- Recognition
  - Emotional recognition
  - Legal and political recognition
  - Solidarity
- Reciprocal understanding
- Standpoint plurality and mutual enabling
- Trust
- Integrity

(Cox, 1991, 2001; Pless & Maak, 2004)

- Individuation
- Esteem
- Uniqueness
- Inclusiveness
- Cross-fertilization
- Humaneness
- Trust
- Dignity
- Isithunzi

(Maier, 2002; 2005)

Figure 2.7: Element fostering diversity
Source: Adapted by author from Maier, 2002; 2005 and Chrobot-Mason & Aramovich, 2013

The figure above shows the framework for fostering diversity. A review of literature identified several elements that foster diversity. For example, Cox (1991, 2001); Pless & Maak (2004) in their study of organisational culture, highlighted five major factors that need to exist in every organisation for successful implementation of diversity initiatives. These factors they broadly referred to as integrating values within organisations without which there will be aineffective diversity management of the workforce. In addition, Chrobot-Mason & Aramovich (2013) study on psychological outcomes of affirming climate for diversity identified seven factors that

© Eseigboria Grace Paula Ijasan, 2018

they recommend are essential for diversity management. Conversely, Maier (2002, 2005) also proposed nine elements important for leading diversity in any organisation. In view of the above literature, we have a cluster of items that are identified as key elements required for fostering diversity as indicated in the figure above. Some of these items might have interrelationships. The concept of fostering diversity is to map out these items, identify their relationships and produce major factors that foster diversity. This will form the basis for developing the fostering diversity index questionnaire which will be used to measure the level of fostering diversity in organisations. The next few sections will discuss the elements identified by this study as pertinent to fostering diversity.

2.7.1 Social Psychological Literature on Diverse Groups

One of the elements identified as important in fostering diversity is the management of the social, psychological impact of diverse groups. The subsequent subsections will discuss this element as observed by literature within certain periods.

2.7.1.1 Past Studies on Social Psychology of Diverse Groups from 1965- 1989

Research (Triandis, Hall, & Ewen, 1965; Mackie, 1984) on diverse groups has thrived for over five decades. This research has over time expanded the horizon of both the layman and scholars of the issues relating to diverse group. Thus, studies have been carried out on several aspects of diverse groups which have been carried out in various organisations as well as in different parts of the world with various methodological approaches; this has resulted in varied but essential findings which have either been the basis for certain scholarly debate or a vital point that supported a scholarly argument. These social psychological literatures were not discussed thematically, but rather, they were identified chronologically to give the idea of the argument that has ensued over the years.

In a series of four experiments conducted in America by Triandis, Hall, & Ewen, (1965) to investigate the relationship between member heterogeneity group and dyadic creativity, the research found out that; dyads which are heterogeneous in attitudes and homogeneous in abilities are more creative than dyads which are heterogeneous or homogeneous in both similarities, the research also found out that training in the other's point of view may improve creativity of heterogeneous dyads. Also, the research found out that tasks may facilitate or inhibit creativity among group members and that low interpersonal attraction is slightly and

© Eseigboria Grace Paula Ijasan, 2018

negatively correlated with creativity. Lastly, the research found out that the more creative the members of a dyad is the higher the dyadic creativity.

In a 1978 research project by Langer on the influence of diverse groups on learning outcomes, the findings showed that diverse groups have significant effect on the learning outcomes of the people. This implies people that one comes in contact with either directly or indirectly have a way of influencing one's learning outcome. However, this is not only limited to educational institutions as was supposed by this research but rather it is also relevant on the job and off the job training. In the light of this, it could be inferred that an employee's job disposition (outcome) in the work place during any of these trainings is significantly influenced by the contact; either direct or indirect, that they have diverse groups present within that work environment. This is made possible as a result of interactions among the group members which allow the members to share information about their various perceptions, experiences, and backgrounds. This interaction therefore becomes a source of exposure for the employee.

A research conducted by Mackie (1984) in New Zealand found that "ethnic minority students sought upward in-group comparisons if they were making comparisons on an evaluative dimension in which negative group stereotypes were made salient". The result of these findings showed that "members of the in-group disconfirm negative stereotypes and it suggests that assimilation effects might occur for self-evaluation".

Another study was conducted on the relationship between the social composition of top management teams and innovation adoption top management in a sample of 199 banks. The research used various indicators to measure this relationship and these indicators that characterise diversity include; age, educational level, tenure, and functional background. The result of the research showed that the most innovative banks were managed by more educated teams (groups) who were more diverse in terms of expertise and background (Bantel & Jackson, 1989).

2.7.1.2 Past Studies on Social Psychology of Diverse Groups from 1991- 2008

Ancona & Caldwell (1992) carried out a qualitative research on 45 new-product development teams; the purpose of the research was to examine the relationship between external activities, group process and organisational performance. The study found out that there is a significant

© Eseigboria Grace Paula Ijasan, 2018

correlation between external activities, group processes and organisational performance. Furthermore, the research established that diversity in the length of service significantly influences the group's goals and priorities which immensely influences the overall organisational performance.

Also, Joplin and Daus, (1997) carried out a qualitative research on the incumbent challenges leading to a diverse work group in which company executives as well as senior managers were interviewed. This has been an aspect of diversity which was rarely researched at this time because of the dangers that were attributed to conducting such research at this period. The research found out that there were six dominant challenges confronting diverse work force groups. Some of these challenges were different perceptions, poor participation, lack of empathy, leadership, style, etc. To ameliorate this ugly situation, the research suggested that there is a need for effective communication between the members of the groups; leader's attributes and skills should be effectively deliberated on before choosing them while diversity initiatives should also be adopted to manage the tensions that may want to threaten the group. Bhadurya, Mightyb and Damarb (2000) in the research on factors responsible for increasing diversity identified three major factors which are responsible for increased diversity. The factors include political factors, economic factors and social factors. The research found out that the only way to increase group effectiveness is to make people of diverse backgrounds work on common projects. This strategy has a way of enhancing and strengthening their relationship, understanding and communication.

An experimental research was conducted by Blanton, Crocker, & Miller, (2000:1) on 60 African American female participants; the aim of the experiment was the effect of stereotype on self-esteem. The researcher collated the feedback on a bogus IQ "test under conditions designed to increase the salience of negative stereotypes". The first experiment was conducted by exposing the women that constituted the participant of this research to either "upward or downward social comparison information about the performance of a white or African American female confederate". Immediately after the first experiment a contrasting experiment followed with an uncontrolled group of women who were observed when the confederate was white. The findings showed that the self-esteem of the women was higher in the downward social comparison condition than in the upward social comparison condition. This finding further implied that groups (black employees) are often encouraged and increase in self-esteem

© Eseigboria Grace Paula Ijasan, 2018

when others from a similar group (black employees) that shares some of their characteristics perform better than them.

Steele, Spencer, & Aronson (2002:1) conducted three experimental researches to find out how negative group stereotypes reduce performance. The first experiment was carried out to examine "whether women experiencing ST had difficulty encoding math-related information into memory and, therefore, learned fewer mathematical rules and showed poorer math performance than did controls". The second experiment, examined "women experiencing ST while learning modular arithmetic (MA) performed more poorly than did controls on easy MA problems; this effect was due to reduced learning of the mathematical operations underlying MA". While the third experiment, "ST reduced women's, but not men's, ability to learn abstract mathematical rules and to transfer these rules to a second, isomorphic task". At the end the research found out that "negative stereotypes about women in math reduce their level of mathematical learning and demonstrate that reduced learning due to stereotype threat can lead to poorer performance in negatively stereotyped domains". This implies that groups are usually underrepresented in negatively stereotyped domains. In view of this, the research recommended that both tertiary institutions and workplaces should recruit from these various groups in order to achieve a critical mass and massive contact with other in-group members which are detrimental to stereotype threat.

2.7.1.3 Past Studies on Social Factors of Diverse Groups

Kochan et al., (2003) in a series of quantitative research conducted on the gender composition of groups within the workplace. Although the result seems complicated, yet the research was able to establish that gender diversity can improve constructive group processes within the work place. Similarly, the research also found out that training, development initiatives, and positive working environments have successfully alleviated the performance decrements associated with racially diverse groups. The research recommends that "universities and workplaces may want to develop resources to help individuals overcome the initial hardships associated diversity so that people may later be able to enjoy the benefits associated with interacting with diverse others".

Another qualitative research conducted by Chang (2003) on the educational impact of racially and ethnically diverse university environments in U.S.; the research emphasises racial and

© Eseigboria Grace Paula Ijasan, 2018

ethnic diversity and the attendant challenges and benefits of multiculturalism in society which are a worldwide phenomenon. The research concluded that different racial groups hold significantly different viewpoints on various socio-political issues, such as the death penalty, health care, drug testing, taxation, free speech, and the prevalence of discrimination within the work place.

A research conducted by Dreachslina, WeechMaldonadob and Dansky, (2004), predicted a three-leg stool model as a solution to reduce racial and ethnic disparities among groups in the workplace. According to them, the first leg of the model is "Public policy" which was developed in order to ensure a legal and regulatory environment designed to eliminate disparities in access and health status. The second leg of the model is clinical practice which was developed in order to ensure patient satisfaction and loyalty and improve treatment outcomes through the cultural competence of clinicians. The third leg is organizational behaviour which was developed in order to ensure that leadership, staff, and the culture of the health services organization represents and values the communities they serve. Haven tested the model and the research concluded that these issues relating to diverse groups can majorly be addressed by the third leg. Hence, the research recommended that organizational behaviour is the most effective tool to manage diversity groups because it is capable of enhancing positive outcomes on individual, group and organizational levels regardless of the size of the organisation.

2.7.2 Diversity Management and Organisational Functions

Vloeberghs (2005) conduct a research on how to manage diversity. The research found out that managing diversified workforce is the biggest challenge in front of the human resource management department of the organizations. The research further found out that diversity can affect an organization's functioning through four ways. The "first is that diversity group can have affective consequences, like lower organizational commitment or lower satisfaction, because people prefer interactions". The second way is that "cognitive outcomes refer to increased innovation and creativity because through diversity people get an opportunity to interact with various people". The third way is that "diverse organizational workforce is a symbol of equality" and the fourth way is that "diversity has implication on the communication processes within groups".

© Eseigboria Grace Paula Ijasan, 2018

In another research conducted by Mannix & Neale (2005) to examine the impact of diversity in gender, age and education on affective well-being and group creativity, 200 group members participated in this research for 20 weeks. The research found out that diversity dimensions such as age and education have no significant influence either on affective well-being or group creativity. More specifically, the research found out that diversity in gender had a significant positive impact on contentment and group member enthusiasm which has a strong direct impact on team creativity, while contentment has an indirect effect on group diversity. The research further explains that there is a sharp difference in the surface-level characteristics such as race and gender which are negatively linked to some group performance outcomes. Contrary to the above findings in the research, the last finding shows that surface-level diversity has positive effects when measuring deeper, underlying sources of diversity (Mannix & Neale, 2005, p.12).

The findings of Beach et al., (2005) in the research conducted on work place diversity where 34 studies that had a before and after intervention evaluation were reviewed in order to examine the effects of cultural competence training among health professionals. The result of the research was that cultural competence training had beneficial effects. The effects were seen on improving group's attitudes, cultural knowledge, and skills across a majority of studies; although, a small minority yielded harmful or null effects. It was evident in the findings that patient adherence to therapy, health outcomes, and equity of services across racial and ethnic groups are lacking.

Kalev, Dobbin, & Kelly (2006) in a study carried out on diversity policies across 708 corporate establishments found out that social isolation can only be reduced among underrepresented groups through networking and mentoring. Also, another research conducted by Richeson & Shelton (2007) on the reason for the performance disparities between diverse and homogeneous groups found out that surface-level diversity may not be sufficient to affect positive outcomes in the workplace, and that deeper sources of diversity must also be considered in order to fully reap the benefits.

The meta-analysis of more than 500 studies conducted by Pettigrew and Tropp (2008) in order to examine whether intergroup contact is capable of reducing prejudices. The research found out that diversity enhancing knowledge in terms of race, age, mental/ physical illness, or sexual orientation about the outgroup, reducing anxiety about intergroup contact and increasing empathy and perspective taking. These findings therefore imply that diversity shapes the process of learning in any organisation, most especially about perception and experiences of minority groups.

© Eseigboria Grace Paula Ijasan, 2018

2.8 Contextual Nature Broad Based Black Economic Empowerment

The BBBEE according to the Department of Trade and Industry in South Africa means viable economic empowerment of Black people (including) women, workers, youth, people with disabilities and people living in rural areas through diverse but integrated socio-economic strategies (Government Gazette, 2014). In a broad sense, it is aimed at depolarising the workplace, making it representative of the population (Krüger, 2011; Patel, 2012; SATO, 2013; Southall, 2007). Its most popular sense is (1) to increase black ownership in the economy and (2) to increase investment. As an instrument of transformation by the present ANC government in 2003 to depolarise South Africa, it has made commendable efforts in creating equality in favour of the previously disadvantaged individuals (PDIs).

Krüger (2011) did research to determine the impact of BBBEE on South African businesses using the ten dimensions of business performance (overall domestic and global competitiveness, service excellence and client satisfaction, quality and acceptance of products and services, productivity, entrepreneurial spirit, production performance, human development and staff morale, business ethics, sales and access to markets, and financial performance). They found that impact of BBBEE on business performance was mainly negative. Seventy percent of the 500 respondents agreed that they would benefit from the adoption of BBBEE; conversely, they recommended that the government should look into the adoption of BBBEE practice as it is flawed, has little credibility and receives little support from company managers. To have an idea of possible barriers to the implementation of BBBEE, this research reviewed Booysen (2007) research on the barriers to the implementation of the EE policy. Their findings identified the following: insufficient focus, coordination and integration of existing implementation processes, lack of shared understanding and communication about EE issues, lack of leadership commitment, inconsistent implementation practices without consequences and white employees' fears around EE. More so, they identified specific organisational issues categorised as process of implementation, organisational culture and external forces described as better job offers for black people of their organisation which increased staff turnover within their own organisations. Tangri & Southall (2008) also found that most established white businesses were apprehensive of a greater political intrusion to advance the BBBEE process. To avoid risking their value by taking on unknown black partners they exercise political influence within ruling circles, attracting prominent black former politicians turned businessmen/women with good political connections who can push for policies to the benefit of capital. With this approach to BBBEE initiative, it can be inferred that such companies will have little commitment and concern for the diverse workforce.

© Eseigboria Grace Paula Ijasan, 2018

These findings therefore underpin the reason for evaluating the implementation of BBBEE as a diversity initiative in other to assess its viability as a tool that fosters diversity.

2.8.1 Perception of BBBEE Implementation

There have been divergent opinions by different scholars as to the effect of what BBBEE is, how it works and its effect. In order enhance the understanding of BBBEE, Patel (2005) perceived BBBEE to be "South Africa's developmental social welfare policy which combines a rights-based approach to development with economic and social development, citizen participation, human agency, a commitment to pro-poor strategies and pluralism involving the state, market and civil society. Also, Burger and Jafta (2006) explained that the Broad-Based Black Economic Empowerment (BBBEE) Act, 2003 was developed in a bid to address the prolonged issues of apartheid legislation in South Africa which has hindered Historically Disadvantaged People in South Africa (HDSA) from taking an active part in the economic activities in South Africa. They noted that the policy specifically addressed issues relating to business ownership, management, employment equity, skills development, preferential procurement, and enterprise development. Similarly, Allen (2011) described BBBEE as the initiative that was developed by the government in order to resolve pending issues on de-racialisation of the South African Economy. Allen (2011) believed that Broad Based Black Economic Empowerment Act, 2003 was aimed at creating an enabling environment for every group in South Africa. A contrary view was presented by Mbeki, (2009) that the BBBEE was a policy geared towards giving the HDSAs equal opportunity to participate in the economy but that the reverse is the case because the policy only afforded the elite group more opportunity to participate in the economy of South Africa.

Since the implementation of the BBBEE there has been argument on whether the initiative was able to foster diversity in South Africa or not. An assessment of the initiative between 2004-2009 revealed that the elite continue to be the major beneficiaries of this initiative and that it was just recently that the Historically Disadvantaged South Africans (HDSAs) particularly employees and women, began to benefit from it (Patel & Graham, 2012). Furthermore, the research found out that it was just recently that the policy began to promote private sector involvement in addressing the state's social transformation agenda. This position supported the argument in DTI (2004) that the implementation of Broad Based Black Economic Empowerment has not led to new opportunities, to an increase in turnover, new customers,

© Eseigboria Grace Paula Ijasan, 2018

innovative ideas by the new partner and does not help the business to acquire new contracts which is tantamount to the fact that the expectation of the general public in the ability of the policy to foster diversity has not been very significant. Even though the initiative has been able to foster diversity in culture, psychological empowerment and integrating values.

Kruger, (2010), carried out an empirical survey among top local South African businesses comprised of small, medium to large multinational companies to ascertain the impact of BEE on ten selected dimensions of business performance. The survey was comprised of 500 managers as respondents, the majority of which were black and female. The findings of the survey revealed that most of the respondents disagreed with the belief that BEE compliance would improve the performance of the companies they worked for, in terms of overall and international competitiveness; service excellence and client satisfaction; quality; productivity; entrepreneurial spirit and innovation; production performance; human development; staff morale, business ethics and transparency; sales and access to markets; and financial performance.

Mbeki, (2009), though a brother to Thabo Mbeki a former president of South Africa, opined that the BBBEE deals a fatal blow against the emergence of black entrepreneurship. He argued that it creates a small class of unproductive but wealthy black crony capitalists comprised of African National Congress (ANC) politicians, both retired and serving, who have become strong allies of the economic oligarchy. He also observed that "the BEE and its subsidiaries (affirmative action and affirmative procurement) have metamorphosed in the core black ideology of the black political elite and, simultaneously, the driving material and enrichment agenda which is to be achieved by maximising the process of reparations that accrue to the political elite" (Mbeki, 2009).

Speaking on the performance of Black Economic Empowerment and economics in South Africa, Acemoglu, et al., (2007) noted that besides the BBBEE, what is mostly practiced is Narrow Based Black Economic Empowerment (NBBEE). Where instead of improving opportunities for majority of the black people, one simply buys off the political elite. The research examined the concept of NBBEE by collecting information on the board members of all the companies listed on the JSE as well as information on all members of the ANC executive committee from 1994-2007 and all elected ANC politicians at both the national and regional level. A matching of the two sets of names revealed that 56 ANC politicians were on the boards of directors of these firms, indicating that there are a number of politically connected people

© Eseigboria Grace Paula Ijasan, 2018

who serve on the boards of many JSE listed firms. The study also emphasised that if reducing inequality is the goal of BBBEE, then such a goal is likely not going to be achieved and noted that although the BBBEEE has increased the share of national income accruing to black people, only a few elites have benefited from BBBEE. This will consequently lead to further polarization as the underprivileged majority will now have the white and the black elites to contend with.

2.8.2 Effect of BBBEE on Economic Competitiveness

To understudy the effect of BBBEE on the economic competitiveness and profitability of firms operating on a micro-level in South Africa, Kleynhans and Kruger, (2014) sample twenty-six out of the top fifty JSE listed companies with consistent BEE rating. The findings of the study revealed that BBBEE has a positive effect on companies implementing it. Thus, the implementation of BBBEE can be said to depolarize the work place and provide a better platform for the management of diversity.

Bhorat and Westhuizen (2008), noted that affirmative action such as BBBEE have increased inequality and forced a large number of poorly skilled labour market majority on organisations. He argued that most of employees that the actions force organisations to employ or sell shares to are ill-equipped for the workplace skills needed in an increasingly globalised and interconnected economy. This in turn increases the challenges of diversity management in such organisations.

In a study to ascertain the implementation level of BBBEE in the construction industry in South Africa, Human (2006) conducted a study in which firms were sampled, some of the companies were seen to have implemented BBBEE by forming a joint-venture with a black company, others by taking in black partners and others by taking in black women. The result of the study indicates that the majority of the companies implemented BBBEE to obtain contracts, some for economic growth, others for company growth, some others to uplift previous disadvantaged people while a few gave no reason. The findings also revealed that although the majority of the companies benefited from it, BBBEE does not affect the upliftment of historical disadvantaged people and as such is not a solution to the upliftment of historically disadvantaged individuals but that instead, the upliftment of previously disadvantaged persons can be resolved by job creation, skills development and education opportunities in the construction industry. The research also revealed that there are not enough skilled persons available to fill the requirements of BBBEE but that the use of

© Eseigboria Grace Paula Ijasan, 2018

mentors to assist contractors is a way to ensure development for BBBEE as the professionals in the industry indicated willingness to share skills and expertise with disadvantaged professionals. Skills development, education and proper internship are a solution to empowering previously disadvantaged persons.

Human concluded that no economy grows by excluding any part of its people, and an economy that is not growing cannot integrate all of its citizens in meaningful way and that BBBEE causes the exclusion of skilled white employees. By his recommendation that South Africa needs more entrepreneurs not a replacement of white entrepreneurs with black ones and that emphasis should be placed on the education of young people, rather than forcing unskilled people into positions they are not capable of performing, it is evident that BBBEE has polarized rather than depolarized the work place. It can also be deduced from the study that the majority of the people, especially blacks, have a positive perception of BBBEE.

In 2008, KPMG BBBEE survey sampling 500 organisations from a variety of industries was conducted to measure the progress of BBBEE (Duffett, 2011). The study showed a decline in employment equity and revealed employment equity as the lowest ranked Broad Based Black Economic Empowerment element. It also identified acquisition and retention of skilled black individuals as the greatest challenge to achieving employment equity.

Mbeki (2007) argued that the companies borne out of BBBEE are vehicles for exploiting natural resources without creating in-depth, inclusive social and economic development and not for creating the much-needed development. He also noted that people do not develop necessary skills when being fast-tracked into a position and being given a free ride and as such the BBBEE does not create entrepreneurs nor add value. He further argued that BBBEE threatens the understanding of value by taking assets from people who were managing them and giving them to people who cannot manage them thus creating a class of idle rich politicians. This, he argued, does not develop a culture of entrepreneurship but instead develops a culture of entitlement whereby black people who want to go into business think that they should acquire assets freely, and that somebody is there to make them rich, rather than building enterprises from the ground up which is detrimental to the growth of organisations since all companies start from the bottom.

2.8.3 Racial Identity and Affirmative Action

Generally, racial identity has to do with how an individual associate with themselves in a group. It is not common to see an individual living in isolation without obviously associating

© Eseigboria Grace Paula Ijasan, 2018

with members of their ethnic group or members of similar ethic background. The cost of this association is often an issue of concern in relations to isolation. Therefore, the relationship that exists between racial identity and affirmative action becomes more essential.

Op't Hoog, et al., (2010) carried out a study too, among others, to unravel the correlation between racial identity as contained in the affirmative action and equal opportunity policies and subscribed identity of Historically Disadvantaged People in South Africa (HSDPSA) and whether this relationship influences the attitude of the HSDPSA towards these policies. A sample size of fifteen was drawn from the middle management cadre comprised of those who are native born and not migrants. The findings of the study revealed that the respondents see BBBEE as a viable tool to deal with the damages of racial discrimination experienced in the past but argued that the BBBEE and other affirmative action policies have not been effectively implemented. The study also revealed that BBBEE and other related policies have produced unwanted effects that contradict basic principles such as individual merit, competence and hard work which are very vital for the future, thereby yielding undesirable effects like stigmatisation and the Historically Disadvantaged People in South Africa (HSDSA) having to prove themselves, having to work twice as hard as they would have done just to get rid of the idea that they got their jobs as a result of these policies instead of ability. Furthermore, these the findings revealed that these policies increase the temptation of some HDSAs to become involved in job-hopping and to demand promotion only because they are a HDSA and not because they qualify for it, thus leaving the organization more polarised than it otherwise would have been and increasing the challenges of harnessing the diversity of the work force.

In order to understand the perceptions about black managers and the attending reasons, as well as the impact they may have on South African organisations in the long term, a study was carried out by Shezi (2011) using a sample of twenty comprised of ten white and ten black managers. The findings of the study can be summarised thus:

- Both the black and white managers were of the view that transformation policies such as BBBEE were necessary even though they expressed various degrees of reservation and skepticism about its implementation could be attributed to poor understanding of the purpose and objectives of the policies.
- White managers showed skepticism regarding transformation, as according to them, it tended to favour blacks.

© Eseigboria Grace Paula Ijasan, 2018

- Majority of both black and white managers felt that the adoption of a new constitution and abolishment of apartheid legislation had provided more blacks with opportunities to move into management positions and as such other actions such as BBBEE were not necessary.
- Although transformation is taking place, the pace is slow and mostly on junior rather than at top management levels.
- The slow increase in black managers does not necessarily signal the failure of transformation policies but rather largely because organizations might be unable to find suitably qualified candidates to take up management positions, since most organizations were not always able to invest the required time and finances for training and developing potential candidates.
- Transformation policies such as Affirmative Action and BBBEE are ineffective at achieving transformation within organizations, because they are usually not correctly implemented and therefore prone to abuse. This is also due to the fact that there is a great deal of negativity associated with these policies.
- Both black and white managers still have negative perceptions of each other that tend to contribute to poor performance of black managers.
- Although these policies are generally perceived as not being effective, they have stimulated an entrance of few black managers into management realm.
- There is cultural diversity at work in Durban though most organizations tend to have a Eurocentric culture.

It can therefore be deduced from the findings of the research that although the BBBEE and other similar policies have increased diversity in the work and depolarized organisations, more still needs to be done to ensure better diversity management as these policies alone create room for tense organisational environments.

2.8.4 Some Key Reviews on BBBEE

In a 2004 survey conducted among 500 adults in metropolitan areas in South Africa to determine the perception of the respondents on BBBEE and other affirmative actions, the following findings were revealed (Research Surveys, 2004):

- Seventy percent of the respondents believe that BBBEE had enriched a select few.
- Two-thirds of the respondents believe that BBBEE was necessary in order to address the wrongs of the past.

© Eseigboria Grace Paula Ijasan, 2018

- Sixty-five percent of the respondents opined that BBBEE was stifling the country's growth.
- Forty-three percent of the respondents believed BBBEE created an environment which fostered corruption while 48% disagreed.
- BBBEE creates enormous demand for the small pool of suitably trained and experienced black South Africans who command astronomical salaries and who are soon head-hunted by competitors;
- BBBEE leads to the loss of irreplaceable skills and experience as whites are forced out of companies or emigrate because of affirmative action policies.

It therefore suffices to say from the above findings that BBBEE polarizes organisations as the skilled white population will be reluctant to mentor the blacks due to perceived threat to their jobs.

A study on transformation and black economic empowerment in South Africa (Klerk Foundation, 2006) reached the following conclusions:

- Inequality has increased despite BBBEE and the Government's declared intentions especially within the Black community.
- So far, BBBEE deals have only benefited a handful of individuals.
- Black South Africans have made only modest progress in terms of employment equity.
- Black South Africans have achieved substantial control over the economy.
- There is an insufficient number of skilled professionals like technicians, operators and managers produced by the education system; further depleting the skill level is emigration of highly skilled blacks.
- The seemingly divergent opinion and understanding of black and white South Africans of BBBEE increases inter-racial alienation which if not dealt with will further polarize existing institutions and hinder diversity management efforts.

In a study by Mohamed & Roberts (2008) to determine the level of BBBEE implementation in the metal sector, the following findings were reached:

- Although the board is still dominated by white men, there is a higher representation of black people in the board of BEE organizations than others.

© Eseigboria Grace Paula Ijasan, 2018

- Foreign owned companies had the least percentage representation of black board members.
- There is no significant improvement in implementation of the BBEE.
- The increase in black representation is mostly at the unskilled level and more specifically black women.

A study by Mputa, (2016) to evaluate the implementation of employment equity in a pharmaceutical company revealed the following:

- Despite satisfying the BBBEE scorecard, racism is perpetuated in the organisation as the employees are hierarchically grouped with the white males occupying the top echelon of the company while the blacks occupy the lower levels. Also, the whites remain at the headquarters while the few blacks who are in management positions, but not sufficient in number to bring about any meaningful change to the culture of the organisation, are positioned at the braches and production factories.
- Although there is improvement in the number of blacks at the top echelon of the organisation's management, their number is still not sufficient to effect the desired change.
- While managers view the company in high regard in terms of BBBEE implementation, the ordinary black employees bemoan the slow pace of change in the company and their impatience with management commitment towards transformation. This difference in opinion is very much understandable as the management is dominated by whites while the blacks occupy the lower levels. The impatience experienced by the blacks towards the white dominated management breeds mistrust between management and employees.
- While the management attributes the organisation's failure to achieve equity targets to external factors such as inadequate skills and business environment, employees attribute it to the internal organizational issues of inability to manage its diverse workforce and the expectations of the designated groups.
- The company only targets legislative compliance to BBBEE which is only concerned with the numerical representation of designated groups but ignores the substantial issues concerned with those groups. By so doing, it veils the core issues affecting diversity at the company.

© Eseigboria Grace Paula Ijasan, 2018

- The company places greater emphasis on profits and market share and thus fails to recognize the contribution of diverse employees to its quest for market dominance.
- The adoption of the non-transformation approach by the company and many others, is attributed to the fear of the whites losing economic power which is the only thing they have left in their possession. Companies lure employees from their competitors to meet the BBBEE statistics requirement instead of training and developing employees from designated groups. This is detrimental to the overall development of the beneficiaries of BBBEE as only few are recycled round the companies without the empowerment of the entire populations, thus extending white dominance due to a lack of skilled black professionals.
- The company's failure to tap into the many benefits brought about by a diversity in the workforce, denies itself opportunities for growth and innovation.
- Affirmative action policies are often viewed with skepticism by whites because they legally enforce the preferential employment and advancement of non-whites and other previously disadvantaged groups.
- It is often difficult to achieve equity and diversity where those currently in positions of power feel threatened.

It is therefore obvious that the polarization of the work place creates a tense atmosphere that inhibits diversity management efforts.

In a study by Migiro, (n.d) to determine the perception of Small, Medium and Micro Enterprises (SMME) contractors in the Housing Department of the Gauteng Provincial Government toward Black Economic Empowerment (BEE) in which 123 contractors were purposefully selected and used as respondents, it was discovered that 82.1 % of the SMME contractors opined that preferential procurement policy had assisted in creating employment and income redistribution within the society, while 83.8 % opined that redistribution of income and wealth within society is a way to create employment and reduce crime in society. The study also revealed that BBBEE has assisted in creating employment and income redistribution within society but noted that there is inadequate commitment to service quality by contractors. Furthermore, the results of the study revealed that 63 % of the customers were dissatisfied with the products of SMME contractors due to the quality of employees hired by the SMME contractors and the inadequate commitment of the contractors to service quality due to inadequate task standardisation.

© Eseigboria Grace Paula Ijasan, 2018

Kruger (2014) undertook a study to evaluate BBBEE (and its codes of good practice) against the provisions of the United Nations (UN) Declaration of Human Rights, the Constitution of the Republic of South Africa (RSA) and the BBBEE Act. The study deployed a 5-star methodology (i.e. state the proposition, specify assumptions, gather evidence, argue case and present conclusion) in the evaluation process. The findings of the study revealed that at least two areas, the Constitution of the Republic of South Africa and the BBBEE Act passed in terms of the Constitution, may be in violation of the UN Declaration, both in its letter and spirit, thus rejecting the initial proposition that BBBEE as it is currently being applied in South Africa is in accordance with a moral and ethical management perspective as underpinned by the United Nations Universal Declaration of Human Rights. Furthermore, the study revealed that so far, there seems to be little evidence that black economic empowerment leads to an increase in economic activity and realizing fair equality of opportunity. In other words, it further polarises rather than depolarises the organisational environment.

2.8.5 Assessment of the Macro-economic Implications of the BBBEE Initiative

Edigheji (1999) opined that BBBEE policy implementation, when not properly placed in the overall context of South African macro-economic policy arrangements, could generate pointless expectations amidst its presumed beneficiaries, as well as unwarranted uncertainties among those who expect to be excluded by it. The expectations from the presumed beneficiaries will propel some to be unruly and disinterested in making actual progress that will position them for growth, while the fears and scepticisms by those who feel locked out will fuel unwarranted strife, thus creating a tense organisational environment and polarising the work place. Consequently, such organisations will be robbed of the much-needed diversity inputs that would have propelled them to enviable heights.

Gqubule, (2006) later argued that although the South African government has implemented many progressive policies and laws at the macro-economic level, known as the macro-economic framework which determines what is possible in all areas of the economy, from industrial policy to education, arts, culture, entertainment and sports, he further stated that government's deflationary macro-economic policies have made it impossible to achieve meaningful capital reform in line with the goals of BBBEE policy and that the macro-economic priorities embraced by the government during the first decade of democracy conflicted with the objectives of capital reform and BBBEE policy.

© Eseigboria Grace Paula Ijasan, 2018

Even before the 2006 research by Gqubule, Bond (2000) had posited that the white establishments use black faces to gain access to the new available government opportunities and often pay blacks in the form of shares in their companies, consequently leading to only a handful of black people being enriched at the expense of the majority. He therefore concluded that BBBEE is a clear case of white South African elites laying a neo-liberal ambush for their success.

To analyse the implementation of BBBEE with a view to determining whether the poor are benefiting from their respective BBBEE strategies and to what extent, Teek, (2009) sampled two Namibian companies (Namibia Mineworkers Investment Company Financial Services (Nam-MIC FS) and the National Housing Enterprise (NHE)). The study deployed open-ended questionnaires and standardized open-ended interview methods. The findings of the study show that on the one hand, Nam-MIC FS is promoting broad-based ownership by allowing union members access to affordable financial services and products while on the other hand, Nam-MIC FS failed to implement BBBEE, due to failure to implement a broad-based skills development programme for employees, Small Medium Enterprise (SME) development for union members and community initiatives.

A 2008 report by the National Housing Enterprise (NHE) revealed that although the BBBEE has been implemented, there has been failure to implement a skills development programme for black SME contractors. Furthermore, it highlights the failure by the NHE to promote broad-based ownership in the provision of housing, since the poor and very poor are directly and indirectly excluded from housing opportunities, thus exacerbating the housing backlog through the emergence of informal settlements (National Housing Enterprise, 2008).

In an attempt to investigate the application of the Employment Equity Act and diversity in the mining industry, Martha, (2010) collected primary data using questionnaires as well as from other secondary sources of data. The findings of the research from the primary data gathered reveal that although progress has been made towards the diversification of the workforce as language proficiency, gender and race were not seen as the barriers. However, racial discrimination and hostile culture were also seen as different races do not mingle with each other during social gathering. As another sign of polarization and ineffective diversity management, half of the respondents indicated their readiness to leave the company if any opportunity arises. The study also revealed unfairness in promotions and development. Findings from the secondary sources of data reveal that the majority of the white males and

© Eseigboria Grace Paula Ijasan, 2018

females are found in skilled and management positions and that the process of accommodating black males and females is slow. It also shows that although recruitments favour black males, the blacks recruited mostly fall under the unskilled category and even though there has been progress in accommodating them in the management and skill levels, their skills development is limited as the white males are given more training despite their being in a more skilled category.

Parumasur and Zulu (2009) on their part argued that issues regarding transformation and cultural diversity are not sufficiently managed. They noted that transformation should not just be about the employment of previously disadvantaged groups but also about making sure that they are made part of the companies for which they are working as empowerment and affirmative action are often coupled with an undercurrent of paternalism that tends to underestimate the talent and ability of individuals. They further argued that without viable structures like transformation forums, mentorship programmes and human resources policies such as BBBEE aimed at supporting the integration of previously disadvantaged groups will not yield results and the effective management of cultural diversity cannot be achieved.

Bosch, (2007), noted that businesses have been struggling to efficiently implement affirmative action policies and despite these ripples of gain, the statistics do not show any improvement in the poverty distribution level. He argued that these actions only target racial representation rather than remedying the economic situation of the less represented and targets only a limited group of beneficiaries. Also, the lack of efficient enforcement mechanism severely hinders the efficacy of BBBEE and other affirmative actions. He further noted that by defining affirmative action target groups along the same lines as past discriminations, the country risks racial tokenism and stigmatisation and if the people who are being discriminated against are not adequately protected, preferential treatment and discrimination may become a vicious cycle, thus leading to a highly polarised work place that will hinder diversity management efforts. He therefore suggested that any preferential treatment should target those who really need advancement while at the same time protecting those whose causes are not advanced. Also, to make BBBEE and other similar policies serve as a long-term balancing mechanism to achieve an egalitarian and integrated society the advancement must be nurtured through integration fostering methods like early education so as to foster integration rather than diversity.

© Eseigboria Grace Paula Ijasan, 2018

In a study by Sanchez, (2011) to ascertain the level of empowerment among Africans, in which some data was reviewed, poverty, especially extreme poverty and inequality increased, visibly among the African population from 1990 to 2004, thus leading to the assertion that the implementation of BBBEE is creating a black corporate elite rather than empowering the entire black community; however, he noted that BBBEE has created a roadmap for empowering disadvantaged individuals and facilitated access to opportunities and financial resources for many black South Africans which is evident in the fact that the country now has a growing middle class which was non-existent before 1994. In another twist, Sanchez noted that the underlying assumption that only white established companies must comply with BBBEE with ownership shifting from white to black hands is unhealthy. He therefore suggests that new business owners and managers, regardless of the racial profile of their enterprises, should commit themselves to empowering the disadvantaged population through the various BBBEE channels like skills development, employment equity, and development of small enterprises.

The research also revealed that BBBEE does nothing to promote social integration amongst the different racial groups, thus creating a lack of social cohesion and sense of togetherness amongst the citizens as evidenced in the marked racial divisions and questions of identity and reconciliation burdening the South African society. This, to him is a pending disaster that may further polarize generations to come. He also noted that despite some of the economic and political frameworks like BBBEE, social inequalities persist, preventing the consolidation of more unified and egalitarian societies and are the consequence of centuries of discrimination they now persist under. He therefore suggested a comprehensive restructuring of institutions and society, rather than the switching of individuals from one race with another as according to him, capital is by nature profit driven and colour blind.

He further argued that although the transformation framework has evolved towards a more inclusive approach, the transformation of the economy at the grass-roots level is very limited. He therefore suggested that BBBEE and other such initiatives should continue evolving to provide opportunities to average citizens to participate in the economy and develop and that the creation of new black-owned and controlled enterprises is crucial if these efforts will yield the desired results.

In a study to analyse the perceptions of the BBBEE framework in the construction sector, Emuze and Adlam (2013) noted that the implementation of BBBEE has undeniably affected the construction industry from the shareholding profiles of construction firms to the

© Eseigboria Grace Paula Ijasan, 2018

commitment of these firms to their host communities. They noted that the all-encompassing nature of BBBEE presents numerous challenges to the construction industry that need to be resolved, so as to ensure a successful transformation of the transportation sector. The findings of the research are highlighted below:

- The generic framework for BBBEE affects the construction industry.
- Contractors often encounter commercial impediments when implementing BBBEE;
- BBBEE is subject to various manipulations such as fronting which is a direct result of BBBEE. As a result of BBBEE, black owned smaller companies opt to engage in fronting as a means of staying in business because doing things the right way seem very expensive. As a result of fronting, the cost of construction increases as the small companies charge exorbitant commission rates.
- Although the training of black employees by firms is good, the majority of the available training is irrelevant, non-value adding and a waste of time or resources. Most times black candidates are sent on irrelevant training programmes just to increase the firm's BBEE rating.
- The Preferential Procurement Regulations have led to an increase in the cost of tendering, as tenderers are required to submit many documents.
- The implementation of BBBEE in the construction sector is being abused as both whites and blacks are exploiting it. While the white-owned firms do so in an attempt to enhance their BBBEE status levels, the blacks just cash in on the policy make quick cash as well as improve their position and participation within the economy.
- BBBEE result in unmerited promotions as more often than not, white-owned companies promote black employees to higher positions, irrespective of whether or not they are the best candidate for the position even though are often not appropriately remunerated and that their performance is not always recognised.
- Black shareholders sometimes bank only on their knowledge of people in high places and the ability to sway contracts in favour of firms instead of banking on what they can deliver.
- Due to BBBEE, some black shareholders refuse to pay for shares and do not get involved in the day-to-day management of companies, but still expect to reap

© Eseigboria Grace Paula Ijasan, 2018

benefits thus failing to achieve the goals set for BBBEE as they will eventually lack the capability to manage any such business in the long run.

- Some skilled and black employees engage in job hopping with job and demand ridiculous remuneration packages with a readiness to leave their current place of employment when offered more money elsewhere.
- As a result of BBBEE, some black managers intimidate and extort their employers by threatening to leave if not provided with a salary increase and because firms are also keen on maintaining their BBBEE rating so as to be able to gain government contracts, they give in.
- Due to the provisions of the BBBEE, many unskilled and inexperienced black graduates enter the workplace with the wrong attitude. Usually without the desire to prove themselves, with the expectation that they don't need to do so because they are black and starting at the bottom is not applicable to them.
- Some blacks also exploit the provisions of the BBBEE policy by insisting on taking part in continuous training programmes, at the detriment of their official duties.
- The introduction of BBBEE has led to an increase in unethical business practices in the industry.
- BBBEE is a facade behind which contractors and other stakeholders hide their questionable conducts like engaging in dubious methods as a means of improving their Generic Construction Scorecards in order to obtain government tenders.
- Black employees occasionally do not receive adequate training from their white managers, as these persons are fearful of losing their positions in the future.

Horwitz, and Jain (2011) noted that there is an over-supply of an under skilled underclass and a severe shortage of intermediate skilled artisans in the labour market and that although the number of black chairmen is increasing at the top management echelon, there is a paucity of experienced and credible black managers at the top levels of management. They also noted that although the measures of progress achieved through BBBEE may be well needed, the BBBEE approach may be an overly mechanistic rather a transformative process and that although the whites still constitute a majority in the managerial positions, the effect of employment equity as enshrined in BBBEE is evident as the number of white managers at the senior executive and middle management groups is declining. The study further revealed that although legislative efforts may yield a measure of economic empowerment, it is not sufficient

© Eseigboria Grace Paula Ijasan, 2018

in itself to advance broader participation in the economy by the disadvantaged and that the reliance on market forces alone cannot achieve that either, thus the need for BBBEE. They therefore opined that for any economic empowerment policy to be effective, it must be based on a transformation of education and skills capacity building, as without this the ability of the state to deliver effective public services to the labour market majority will be hampered.

2.8.6 Effectiveness of Past Interventions in South Africa

Steyn (2010), on diversity interventions in some South African organisations using a case study of Large Industrial Company (LIC) noted the following:

- Although LIC had formal policies in place, there exists a gap between policy and practice as even the little sense of value for diversity exhibited by the management was due to legislated necessity and not based on organisational culture.
- The diversification effort of the organisation did not incorporate middle- and lower-level managers. This consequently affected their level of buy-in, resulting in their failure to inform staff of the transformation process and effectively motivate them.
- Due to the absence of any penalty for not adapting and complying to diversity-management requirements, the discriminatory tendencies of some managers were encouraged, thus further leading to more polarity and discrimination in the organisation.
- The absence of any reward system for managers who excelled in diversity management and its lack of prioritization amounted to low level of interest amongst managers in pursuing it.
- Lack of proper training for managers had had field experience but lacked managerial knowledge and the skill and experience required to manage people and their individual peculiarities.
- The intervention policies were implemented at a slow pace because they weren't prioritized by the organisation and the positive side of diversity had not been explored.
- LIC showed readiness to move beyond BBBEE to managing diversity.
- LIC has benefited from the effect of individuals with diverse backgrounds bringing their wide-ranging knowledge and expertise to the table. For instance, its earnings rose by 417% the year after it strategic equity partner obtained a majority interest

© Eseigboria Grace Paula Ijasan, 2018

in the organisation, LIC's headline. This shows that companies that embrace diversity management are in a better position to navigate the dynamic marketplace.

Kelly, in Steyn (2010), made the following findings after evaluating the implementation of BBBEE and other policies at the Small Food Production Company (SFPC):

- The company's level of compliance in diversity was seen as a self-preservation effort and the protection of current patterns of interest.
- The company's diversity efforts were championed. This they achieved through employment and promotion strategies, thus meeting the BBBEE scorecard.
- Diversity was seen by members of the organisation as a problem and not positive as to be capitalised on as an organisational strength.
- The company had no policy to drive diversity and failed to integrate the idea into its core business.
- Although embracing diversity was itemised in the mission and vision statement of the company, the management team failed to understand the value of diversity in the workforce and thus made no link as to how the implementation of diversity would drive strategic objectives.
- Transformation was not seen by the organisation as a core business function and thus not pursued adequately nor integrated into the company's operations but rather left as a human resource function.
- Furthermore, the company failed to holistically address the social and historical legacies of racism and sexism.

The study revealed that discrimination is evident in many organisations and that South Africa as a nation has not overcome the apartheid era at the workplace. The study also noted that BBBEE has benefited only a few government officials and that organisational culture can only produce effective productivity among staff if all employees work together and put the effects of apartheid behind them.

From the above literature, we can therefore say that although the BBBEE increases the inclusion of black into the economy's mainstream, it further polarizes the work place as the whites feel their jobs are under threat by the blacks while the few skilled blacks get emboldened since they can easily get other jobs. These in turn reduce the chances of pursuing a truly diversified workplace.

© Eseigboria Grace Paula Ijasan, 2018

2.9 Preliminary Findings of the relationship between BBBEE & Fostering Diversity

This section summarises the research findings from literature with the aim of highlighting research problem and the aim of the study. Below are some of the findings:

1. A review of literature on BBBEE Act revealed that focus up until now has been on the evaluation of the Act with respect to (a) meeting its objectives with regards to increasing black control in the economy (Juggernath et al., 2013; Southall, 2007) and (b) its impact on investment (Krüger, 2011) with less focus on its capacity to foster diversity.
2. Literature also revealed that the BBBEE Act like the AA and EE initiatives is perceived as another diversity policy that is causing more harm than good. It is causing a societal power shift which has accentuated the social identity conflicts in the workplace (Booysen, 2007).
3. Diversity management initiatives have been adopted by organisation as a one size fits all without taking into consideration organisational culture, integrating values and leadership competence. All these factors play key roles in the successful implementation of any diversity policy. Qualitative diversity management, which is underpinned by fostering diversity, goes beyond political and moral correctness to a higher level where diversity is valued and nurtured to achieve maximum individual participation and increased business competitive business advantage.
4. The evaluation of the current state of the BBBEE in South Africa revealed that it has flaws with several challenges most especially with its centralization and implementation strategies. Hence, the policy has not been able to achieve its purpose.

Knowing if and how well the implementation of BBBEE fosters diversity will be the tenet for this research. This will be achieved by exploring the current state of the act interpretation and implementation of BBBEE as well as capture the perceptions of employees with regards to organisational culture, integrating values of the organisation and leadership competence within the workplace using the Fostering Diversity Index questionnaire.

Table 2.1 gives a summary of some of the literature reviewed. It shows the context in which the study was carried out, method of research and main findings.

© Eseigboria Grace Paula Ijasan, 2018

Table 2.2: Summary of some key literature

Author(s)	Literature on African Management and BBBEE		
	Research Context	**Research Method Applied**	**Summary of Findings**
Booysen, 2007	South Africa	Qualitative: Review of literature	Societal changes are dictated by or bound within racial categories due to the polarisation of South African society.
Juggernath et al., 2013	South Africa	Qualitative method: Review of literature	There is no record of a quantified success of the BBBEE. Only companies dealing with the government are legally required to comply with ACT.
Krüger, 2011	South Africa	Quantitative: Survey	Impact of BEE on SA businesses on ten dimensions is mainly negative
Southall, 2007	South Africa	Qualitative	BBBEE is yet accomplish its full objectives
Literature on Managing Diversity			
Joplin & Daus, 1997	USA	Qualitative: Interview and review of literature	Diversity Initiatives are not a one size fits all, but customised to suit companies at different levels of diversity with active participation of top management
Podsiadlowski et al., 2013	Austria	Qualitative: Study 1 Structured interview Quantitative: Study 2 survey	Extends perspectives (paradigms) to the approach of diversity to five. 1. Reinforcing homogeneity. 2. Colour blindness.3. Fairness. 4. Access. 5. Integration and learning
McCuiston et al., (2004)	USA	Qualitative: Focus group	Fostering diversity requires business leaders to provide work environment that encourages flexibility, inclusion and change

© Eseigboria Grace Paula Ijasan, 2018

Roberge & Van Dick, 2010	General	Qualitative: Review of literature	Identifies the role of collective identity and psychological safe climate as well as conditions under which diversity may increase group performance.
Thomas & Ely, 1996	USA	Mixed method: interviews, survey, archival data and observation	Explains 3 organisational perspectives to diversity. 1. Discrimination and fairness. 2. Access and legitimacy. 3. Learning and Effectiveness. Concludes that learning and effectiveness is superior.
Maier, C. (2005).	SA	Qualitative: Case study- data triangulation	Identified 8 of 9 proposed elements for leading diversity: individuation, esteem, uniqueness, inclusiveness, humaneness, dignity, trust and isithunzi (personality)
	Social-Psychological Literature on Diverse groups		
Carmeli, Brueller, & Dutton, 2009		Quantitative: Survey	Explains the mediating roles of quality relationship on perceptions of psychological safety and learning behaviours in an organisation.
Chrobot-Mason & Aramovich, 2013	USA	Quantitative: Survey	Extent of organisational engagement in sets of diversity practices results in positive psychological outcomes that encourage employee's full contribution to the workplace
Mannix & Neale, 2005	USA	Qualitative: critical review of literature	Identifies the role of collective identity and psychological safety as well as conditions under which diversity can increase group performance.
		Social Dominance Theory	
Pratto, Sidanius and Leven (2006)	Theoretical proposition (however, authors are based in the USA)	Theoretical review of 15 years of literature on social dominance theories and the controversies surrounding the theory.	Most importantly, authors concluded that social dominance theory demonstrates that social psychological theories do not have to use the motivations of individuals as their main heuristic; theories can be useful across more than one or two levels of analysis (e.g., culture, person–group). This is useful in this research's psychological

© Eseigboria Grace Paula Ijasan, 2018

			empowerment theoretical perspective and also in the use of 'the individual' as the unit of analysis for this research
Gazi Islam (2014)	France	Meta-analysis of literature	The focus on the social psychological processes by which ideological structures become internalized in individual attitudes and beliefs distinguishes SDT from other theories of ideology and makes SDT more amenable to psychological research. Although such beliefs benefit high-status members, their internalization by low-status groups also serves to prevent such groups from engaging in social action to prevent prejudice and inequality. Empirical findings from literature supporting the link between SD and the tendency to promote policies that disadvantage low-status groups

© Eseigboria Grace Paula Ijasan, 2018

2.10 Chapter Summary

This chapter explored the concept of diversity, the different ways organisations approach diversity which is mostly dependent on their culture. It used the SIT and Self-Categorisation theory to explain how the different social identities redefine themselves and others as a reflection of the definition within the social construct. How this redefinition and categorisation interact and how it causes social identity conflicts. It distinguished between qualitative and quantitative diversity management and identified elements that determines successful diversity management practice. Finally, it identifies BBBEE as diversity initiative and justifies a need for its evaluation as a tool that fosters

© Eseigboria Grace Paula Ijasan, 2018

CHAPTER 3 Research Methodology

3.1 Introduction

Research is about asking questions and seeking information to answer the questions that we pose (Mulkerji & Albon, 2010). According to the University of Manchester Study Skills guide (2014), "Methodology" implies more than simply the methods you intend to use to collect data. It includes a consideration of the concepts and theories which underlie the methods. Kothari asserted that when you say that you are undertaking a research study to find answers to a question, you are implying that the process has undergone three key principles (Kothari, 1985). These principles are that the study is being undertaken within a framework of a set of philosophies (approaches); it uses procedures, methods and techniques that have been tested for their validity and reliability; and lastly, it is designed to be unbiased and objective.

Management research such as this requires a philosophy within its design. This helps to clarify the research, shows philosophical positioning of both the researcher and the research and to demonstrate that the best approach has been followed (Easterby-Smith et al., 2002). Putting it simply, (Johnson & Duberley, 2000) describes having a philosophy of research as a key feature of one's pre-understandings which influences how one makes things intelligible: an argument that explains how a researcher came to ask particular questions, how one assesses the relevance and value of different research methodologies so that a researcher can investigate those questions and how to evaluate those outputs of research.

3.2 Research Philosophy, Paradigms and Approach

According to (Easterby-Smith, Thorpe, & Lowe, 2002)Easterby-Smith, Thorpe, & Lowe (2002), there are three approaches to research in the social sciences. These are positivism, relativism and socio-constructionism. Johnson and Duberley (2000) earlier identified three approaches, but list them as positivism, linguistic and interpretative. Kumar (2005) splits the research approach debate down the middle by identifying two broad categories of research as simply positivist and interpretivist. However, Saunders et al (2009) had a more holistic view by listing four approaches in business and management research. These were: pragmatism, positivism, realism and interpretivism.

However, diversified the terminologies used to represent these philosophies are, it is clear that the central arguments justifying their usage as well as benefits are similar. For example, the main idea of the positivist philosophy is that the social world exists externally and for its properties to be understood it must be measured by objective methods. The first proponent of the positivist philosophy was Auguste Comte (1798-1857). According to him, observation and

© Eseigboria Grace Paula Ijasan, 2018

reason are the best means of understanding human behaviour; true knowledge is based on experience of senses and can be obtained by observation and experiment. Saunders et.al., (2009) suggests that positivist researchers are more like natural scientists and those operating within this paradigm are more likely to work with an 'observable social reality' and that the product of such research is most likely going to be law-like generalisations, which are similar to those produced by natural and physical scientists. This agrees with Henning et al., (2004) who proposed that positivism is concerned with uncovering truth and presenting it by empirical means. Positivists can be said to be 'scientific' in their approach, with using methods that are highly organised, measurable and based on empirical evidences (Easterby-Smith, 2002; Kothari, 2004).

Interpretivist philosophy on the other hand does not seek an objective truth so much as to unravel patterns of subjective understanding (Roth and Metha, 2002). It advocates that it is necessary for the researcher to understand differences between humans in our roles as social actors (Saunders et al. 2009). Interpretive researchers realise that they will both influence and be influenced by the research activity they are involved with and that a relationship between the two will develop naturally i.e. the axiology of the interpretivist researcher is 'value laden'. According to Livesey, the interpretivist philosophy is more inclined towards the collection of qualitative data and uses methods such as unstructured interviews and participant observation that provides this type of data (Livesey, 2006). Goldkuhl (2012) on the other hand, is of the opinion that, even though there are many forms of interpretivism, such as 'conservative', 'constructivist', 'critical' and 'deconstructionist', the general idea is still that the interpretivist is more concerned about meanings in a subjective manner.

The two other philosophies outlined by Saunders (2009) are 'realism' which is related to scientific enquiry but states that there is a reality out there which is quite independent of the mind and also 'pragmatism'. A pragmatist will argue that the most important determinant of a research approach is the research questions. Pragmatism is a philosophical movement that includes those who claim that an ideology or proposition is true if it works satisfactorily. Pragmatists do not necessarily adopt any set position. McDermid argues that as long as a theory functions, it makes sense to keep using it; although, allowance is always made for the possibility of replacing it if some other theories happen to work better (McDermid, 2006).
For this research, the researcher realises that going by the context of the research, the study leans more towards the ***positivist*** research paradigm. This is because it intends to uncover

© Eseigboria Grace Paula Ijasan, 2018

elements that foster diversity in the implementation of the BBBEE Act using quantitative method. The quantitative method is a highly organised and measurable method that can aid the development of the proposed model which can be generalised to organisations in different contexts.

3.2.1 Research Design

What is knowledge? What is reality? How do we study for new knowledge? These are the main questions about the philosophy of research. According to Lindgren & Packendorff (2009), what is usually called science is, like other fields of knowledge, a social construction depending on both the scientist's beliefs and values and their strict attachment to abstract methods and measures.

As outlined by Barnes (2013), since there are parameters which describe perceptions, beliefs, assumptions and the nature of reality and truth (or knowledge of that reality), as well as the individuals values, they can influence the way in which the research is undertaken, from design through to conclusions, and it is therefore important to understand and discuss these aspects in order that approaches congruent to the nature and aims of the particular inquiry are adopted, and to ensure that researcher biases are understood, exposed, and minimised. The overarching concept of research design is "the researcher's overall plan for answering the research question or testing the research hypothesis" (Polit, Beck, & Hungler, 2001). Research design is often concerned with issues such as the study type, research question, hypotheses, variables, and data collection methods. Some examples of research designs include descriptive, correlational, and experimental. Another distinction can be made between quantitative and qualitative methods. As described by (Yin, 2011), research design is like an "action plan for getting from here to there". Understood more as a broad approach to examining a research problem than a methodological design, philosophical analysis and argumentation is intended to challenge deeply embedded, often intractable, assumptions underpinning an area of study (Labaree and Scimeca, 2008).

Research philosophy uses the tools of argumentation derived from philosophical traditions, concepts, models, and theories to critically explore and challenge, for example, the relevance of logic and evidence in academic debates, to analyse arguments about fundamental issues, or to discuss the root of existing discourse about a research problem (Saunders, Lewis, & Thornhill, 2012). These overarching tools of analysis can be framed in three ways:

© Eseigboria Grace Paula Ijasan, 2018

- Ontology - the study that describes the nature of reality; for example, what is real and what is not, what is fundamental and what is derivative?
- Epistemology - the study that explores the nature of knowledge; for example, on what does knowledge and understanding depend and how can we be certain of what we know?
- Axiology - the study of values; for example, what values does an individual or group hold and why? How are values related to interest, desire, will, experience, and means-to-end? And, what role does value play in our research choices?

Blaikie (2000) describes ontology as 'the science or study of being' and develops this description for the social sciences to encompass 'claims about what exists, what it looks like, what units make it up and how these units interact with each other' (Blaikie, 2000). It is the study of the nature of reality (Saunders et al., 2009). The two broad aspects of ontology are either subjectivity i.e. does the reality exist only through experience of it or objectivity- it exists independently of those who live it. Epistemology on the other hand refers to the researcher's view of what constitutes acceptable knowledge (Saunders et al., 2012)

Since in the context of this research, the critical literature review aims to examine elements that foster diversity and investigate if these elements exist in companies implementing the BBBEE Act in order to establish claims that implementation of the Act fosters diversity in the work place; it can be said that the research is a form of exploration. Since issues like 'individual differences', 'sense of belonging' and diversity as a whole is subjective, relevant literature in this research used the interpretive approach (Johnson & Duberley, 2000) or exploratory study (Saunders et al., 2009). Therefore, because this work will be an extension of exploratory research on managing diversity and the BBBEE Act as it seeks to evaluate BBBEE Act in order to identify elements that foster diversity within companies implementing the Act. This research will take the objective ontological position with the assumption that reality exist independently of human thoughts and beliefs of their existence but is interpreted through rational enquiring of an occurring phenomena. It will also take the epistemological assumption of the positivist that knowledge is obtained by observable phenomena with a focus on causality and law-like generalisations. In the case of this research, it will be looking at the implementation of the BBBEE Act in relation to fostering diversity. In addition to the above the research will also be undertaken under the value free axiological position (Easterby-Smith et al., 2002; Saunders, Lewis, & Thornhill, 2009)

© Eseigboria Grace Paula Ijasan, 2018

3.2.2 Research Paradigm

Saunders et al., (2009) state that there is a need for research paradigm to explore the research philosophies further, thereby bringing the ideas behind the chosen philosophy together for better understanding. Paradigm as defined by Saunders et al., (2009) is a way of examining social phenomena from which particular understanding of these phenomena can be gained and explanations attempted. According to the authors, there are four paradigms simply defined with their ontological perspectives; functionalist paradigm – concerned with the rational explanation of why a particular organisational problem is occurring and developing a set of recommendations within the structure of the organisation's current management (objectivist), interpretive paradigm - concerned with the human attempt to make sense of the world (subjectivist), radical humanist paradigm - concerned with changing the status quo (subjectivist), radical structuralist paradigm - tries to understand structural patterns within work organisations such as hierarchies and reporting relationships and the extent to which they produce dysfucntionalities (objectivist). The functionalist paradigm becomes the concept which forms the decision in adopting the positivist philosophy for this research as it explains how social equilibrium exists in the society. It further tells how elements of the society like the family, religion, government, philosophy and education contribute to the societal stability. In the case of this research it seeks to tell how implementation of the BBBEE act has helped in depolarising the workplace by improving work relationships. In the light of the aforementioned, this research would take the functionalist paradigm.

3.2.3 Research Approach

The social researcher has many approaches available to them to carry out a study. These approaches include grounded theory, ethnography, feminist research, action research and more. However, no one approach is yet to be proven to be the best of all as some are used based on their popularity within different social, political, cultural and historical times of our development (Dawson, 2009). Over the years, research authors have categorised the approach to research using two broad categories: qualitative and quantitative approaches.

Qualitative research is mostly interpretivist as it explores behaviours, attitudes and experiences through interviews and always follows through the line of inductive logic reasoning. The qualitative researcher looks at social phenomena holistically and is often submerged in her study making it value laden. This gives room for biases of values and interest as personal-self becomes inseparable from researcher-self (Dawson, 2002; Saunders et al., 2009). Quantitative approach on the other hand, is mostly associated with positivism involving the use of highly

© Eseigboria Grace Paula Ijasan, 2018

structured data collection technique like the questionnaire survey (Creswell, 2009; Saunders et al., 2012). According to Saunders et al, (2012) quantitative approach may sometimes be seen to fit partly within the interpretivist philosophy where data are drawn about attributes of people, organisations or based on opinions. It also mostly follows through the line of deductive logical reasoning and a major characteristic of this approach is the use of statistical techniques to examine relationships between variables by measuring them numerically (Creswell, 2009; Dawson, 2009; Saunders et al., 2012). Furthermore, as buttressed by Creswell, (2009), the quantitative research is one in which the investigatory primarily uses postpositive claims for developing knowledge like cause and effect thinking, test of theories, reduction of specific variables and employs strategies of enquiry like questionnaires to collect data on predetermined instruments that yield statistical data.

Therefore, because this is a social research that aims to investigate the presence of elements that foster diversity in BEE companies in order to ascertain that by mere implementation of the BBBEE Act, diversity is being fostered; the quantitative approach within the positivist paradigm is chosen. The strategy adopted in this research is an initial test approach in the form of a pilot study. The Wits Business School Executive MBA class was chosen for this purpose. The Wits Exec MBA class fits this purpose because it is comprised of matured working-class students either working in a top performing BEE company or is an owner of a top performing BEE company all of which made the EmpowerDex list of top BEE performers. One hundred seventy pilot surveys were sent out using Qualtrix; 120 opened the link, 48 consented to the survey while only 20 people completed the survey. The aim of this pilot scheme was to identify social implications relating to the BBBEE Act and diversity management that were absent in literature, in order to incorporate them into the questionnaires, to establish whether the proposed sampling frame and technique will be effective and to convince stakeholders that the main study is worth supporting (van Teijlingen & Hundley, Winter 2001). This makes the pilot study a process for validating the constructs. For the pilot survey exercise, it emerged that while the most convenient approach, emails was not going to be an optimal approach to getting adequate responses and feedback.

Next was the distribution of 270 questionnaires among nine companies from the EmpowerDex list of top BEE performers. Sampling technique used to select the nine companies was the *heterogeneous purposive sampling technique* (Saunders et al., 2012). According to Saunders et al. (2012), minimum sample size using this technique is between 12 and 30. Therefore, based

© Eseigboria Grace Paula Ijasan, 2018

on the investigative nature of this research, the sample size for this study is 270 to be obtained from nine companies within the EmpowerDex top BEE 100. The choice of nine companies out of the sample frame 100 companies is to reduce the limitation of adopting the purposive sampling method, thereby providing an opportunity of carrying out an in-depth cross-sectional study. Each sample is representative of a sector and thus, data collected from them will document the uniqueness in each company's approach to BBBEE and diversity management. The target sectors were insurance, banks and financial services. The achieved target was three companies from each sector and 30 respondents from each company. This made 90 respondents from each sector and 270 respondents in all. The respondents were asked questions based on the research's adaptation of the OCAI, respondents were asked questions based on their individual perspective. The unit of analysis is hence the individual, but the sectors were analysed separately as shown from section 5.7.

3.3 Appropriateness of Research Methodology

Methodology as defined by many authors refers to the way research problems are solved systematically with the combination of different research methods (Horn, 2009; Kothari, 2004; Saunders et al., 2012; Silverman, 2013). Kothari (2004) added that when discussing research methodology, we not only talk of the research methods but also consider the logic behind the methods we use in the context of our research study and explain why we are using a particular method or technique and why we are not using others so that research results are capable of being evaluated either by the researcher himself or by others. According to Crotty (2004), there are many methods available to the researcher, depending on the nature of their research. These methods include; action research, grounded theory research, experimental, ethnography, survey research and more (Crotty, 2004). However, Saunders et al. (2012) and Sarantako (2005) were of the opinion that the concept of methodology relates to the theoretical principles which can be narrowed down to two categories: qualitative and quantitative methodologies. Furthermore, they also agree that choice of methodology is aided when there is a purpose for the research. The purpose of research as broadly identified by them are; exploratory, descriptive, descripto-explanatory and explanatory (Sarantakos, 2005; Saunders et al., 2012). This research is considered to lean more towards a *descripto-explanatory study* as it seeks to uncover the current level of diversity in BEE companies as an impact of implementing the BBBEE Act. More so, it uses the description of current diversity management practices within BEE companies as a precursor to explain the impact of the BBBEE Act in relation to fostering

© Eseigboria Grace Paula Ijasan, 2018

diversity. Hence, it answers the 'what' is happening, 'how' it is happening and gives room for 'why' it is happening. After a critical review of the various methodology categorised by Crotty, two types were considered to be the most appropriate for this research and they are action research and survey research. (1) Action research, which refers to a study where the researcher does not do research on people but with them, acting as a facilitator to improve a situation in a particular setting (Dawson, 2009). This methodology is deemed unsuitable for this research as it can be considered a second step in this study succeeding the findings from this research. This research intends to assess the implementation of the BBBEE initiative in order to establish the possibility of it being a tool that fosters diversity. In assessing the BBBEE initiative, it investigates the presence of elements that foster diversity which include affirming climate for diversity, inclusive management practice, acceptance of uniqueness, reduced social categorisation as adapted from the key literature (Carmeli et al., 2010; Chrobot-Mason & Aramovich, 2013; Maier, 2005). (2) Survey research on the other hand was considered a better approach for an investigative research like this. This would be the foundation upon which further research can evolve through its findings. This is because survey research as defined by (Trochim, 2006) encompasses any measurement or investigative procedure that focuses on obtaining factual information from respondents about themselves or aim to collect opinions about a phenomena. Survey research was considered ideal as issues of diversity and the BBBEE initiative are considered sensitive and as such would evoke nonparticipation or biased responses. To assess the level of diversity within the BEE complying companies would require appropriate reduction of the dependent variables into simple questions in the anonymized structured questionnaire. This is hoped to obtain adequate answers without stirring more than is required emotions to jeopardize the results. Questionnaires were used as the main instrument for data collection in this survey research. As mentioned in section 3.2.3, it was preceded by a pilot study with the aim of capturing implications of relating the implementation of the BBBEE Act as a diversity initiative absent in literature, which would enhance the structuring of the questionnaire.

Table 3.1 below shows the sources of data and how it relates to meeting the research objectives.

© Eseigboria Grace Paula Ijasan, 2018

Table 3.1: Source of data in relation to research objective

Research Objectives	Sources of Information		
	Literature Review	Pilot study	Questionnaires
R. Obj. 1	X	X	
R. Obj. 2	X	X	X
R. Obj. 3	X	X	X
R. Obj. 4		X	X

Table 3.1 shows how the objectives of the research will be achieved in relation to the sources of data. It shows the three resources of data collections, which are literature review, pilot study and questionnaire. For instance, objectives one and two which have to do with providing extant comprehensive knowledge about the study will be achieved by critical review of relevant literature while objectives three and four that are focused on identifying the elements that fosters diversity, investigating the existence of these elements within BEE complying companies as well as developing a tool for determining the level of diversity will be resolved from the pilot study and questionnaires. Literature review however, is a continuous process all through the research.

3.4 Research Methods

Dawson, (2009) defined research methods simply as the appropriate tool or tools needed to collect data. Some authors have replaced the word tool for technique and both are used interchangeably in management research (Kothari, 2004; Saunders et al., 2012; Silverman, 2013; Yin, 2011). Going by Dawson's definition of research methods, this implies that a study could apply one research method or a combination of methods also known as triangulation (Horn, 2009; Kothari, 2004; Kumar, 2005; Sarantakos, 2005; Saunders et al., 2012; Silverman, 2013). Some of the research techniques identified are focus groups, interviews, semi-structured or structured interviews and questionnaire surveys.

3.4.1 Pilot Study

Since part of the aim of this research is to develop an instrument to measure the level of fostering diversity, this study considers a first approach in the form of pilot study to authenticate and improve on the theoretical framework of the Fostering Diversity Index questionnaire. It involves distributing structured questionnaires to the stakeholders. These

© Eseigboria Grace Paula Ijasan, 2018

include middle management, lower management and non-managerial staff to accommodate companies with few management positions. Teijlingen and Hundley (2001) gives a summary of the importance of conducting and reporting a pilot study which are as follows:

1. It assesses the feasibility of the steps that need to take place as part of the main study. Examples include determining recruitment rates, response rates, etc.
2. It deals with assessing time and budget problems that can occur during the main study. The idea is to collect some pilot data on such things as the length of time to mail or fill out all the survey forms.
3. It covers potential human and data optimization problems such as personnel and data management issues at participating centres.

3.4.2 Questionnaires

The Fostering Diversity Index (FDI) questionnaire was distributed to 270 respondents spread across the selected nine top BEE companies. The questionnaires were distributed using software called Qualtrics. This is done by first creating a panel that is later uploaded into Qualtrics and further distributed to the respondents. A panel is a collection of information that can either be email addresses or age, race etc. of respondents that can be uploaded into the software for survey distribution and ease of data analysis. To distribute the questionnaire, a custom link is automatically sent by Qualtrics mailer to each respondent for easy tracking and for sending off reminders and "thank-you" messages. An upside of creating a panel is the elimination of the drudgery of re-importing data for repeated survey because it is already imbedded in the software. A disclaimer is included to the introductory section of the questionnaire to assure respondents that personal information which is email addresses, in this case, will be scrubbed off during the data analysis process.

3.4.3 Sampling

This research adopts the *heterogeneous purposive sampling* technique which is a form of purposive sampling method. It gives the researcher the opportunity to select sample cases that best answer the research question(s) Saunders et al., (2012). As earlier mentioned in section 3.2.3, the broad question for this study is to ascertain the impact of the implementation of the BBBEE Act on fostering diversity within South African companies. Hence, the sample population is limited to EmpowerDex certified top BEE performing companies. To do an in-depth cross-sectional research**,** *heterogeneous purposive sampling method* is employed to

© Eseigboria Grace Paula Ijasan, 2018

select sample frame of nine companies. According to Saunders et al., (2012) minimum sample size for this method is 12 – 30, while Creswell (2007) suggests between 25 and 30. However, this research targets a sample size of 270 which implies 30 respondents per company within the sample frame with an estimated response rate of between 30% and 50%. The justification for having a large sample size is first, to carry out a successful factor analysis and second, to come to a research conclusion that can be generalised beyond the research population and to contexts with the same interest outside of South Africa.

The sample for the data consisted of banks and insurance companies. There are several arguments that have motivated the researcher to select this sector for the sample. The financial sector is one of the strongest economic sectors in South Africa. The top 5 banks in South Africa employ over 150,000 people directly; this makes about 3% of the total personal income tax payers in South Africa (The Banking Association of South Africa, 2017).

In South Africa, the banking sector is characterised by high levels of concentration, with the four largest banks accounting for about 90% of the market by assets or deposits (Simbanegavi et al 2014). According to the World Federation of Exchanges WFE (2016), South Africa has a sophisticated financial structure with the JSE Securities Exchange, a large and active stock exchange.

The South African market is the most developed one in the African continent (Alagidede et al. 2017). The JSE is also one of the top 20 exchanges in the world in terms of market capitalisation and is a member of the World Federation of Exchanges WFE (JSE 2018).

According to BusinessTECH (2017), the top 5 banks in SA as at 2017 are Standard Bank, First Rand Group, ABSA, Capitec and Nedbank; with a combined market capitalisation of 55.8 Billion USD. This represents almost 16% of the total GDP of South Africa.

Equally important is the fact that on the last Empowerdex BEE rating for 2014, save for Capitec Bank (which is relatively new), all the top banks in SA rated highly on the Black Economic Empowerment scale.

Being a formal sector, it is seen also that financial services sector usually has option of markedly different levels which makes it more practical to do an analysis between the levels.

- *Limitations of sampling method:* in the course of the data collection exercise, numerous challenges were encountered. As subtly hinted from the pilot study, the initial approach of email contacts was not so successful. The response number and rate were both inadequate. This prompted the researcher to seek alternative ethical ways to collect the

© Eseigboria Grace Paula Ijasan, 2018

data. To this light, telephone interviews were adopted as a follow up measure. The pre-identified respondents were contacted telephonically, and the survey's questions were asked directly. The reason for the failure of the email survey can be attributed to the sensitivity of the questions. It is expected that race-related matters are always taken seriously and respondents in their busy schedule would rather shy away from filling such questionnaires. However, with the follow up one-on-one and telephonic interaction, the researcher had the opportunity of reiterating the strict confidentiality and anonymity of the responses and the confidence levels of the respondents was boosted by this.

3.5 Data Analysis Technique

SPSS was used to analyse data obtained from the survey. Due to the nature of this study and the objective of this research, data was analysed in three stages. A section of the Fostering Diversity Index (FDI) questionnaire will include the Organisational Cultural Assessment Index (OCAI) developed by Cameron & Quinn (2006) to identify the dominant culture that exist within the companies. The reliability of OCAI has been tested by many researchers amongst them are: Fralinger & Olson (2011) to assess the organisational culture at the University level (50 students from two health education courses at Rowan University) and Suderman (2012), 500 church leaders in North Carolina Triad in a research assessing OCAI as a tool for team development for a new leader. The first stage was a descriptive statistical analysis to determine the proportion and percentages of the identified variables that captures fostering diversity and organisational culture. Next stage is the exploratory factor analysis (EFA) which will be employed to determine the number of diversity dimensions. The use of EFA is highly recommended for self-reporting questionnaires and widely used in the field of psychology and education (Carmeli, Brueller, & Dutton, 2009; Carmeli et al., 2010; Chrobot-Mason & Aramovich, 2013; Williams, Brown, & Onsman, 2010).

3.5.1 The Factor Analysis Model

According to Williams et al., (2010), Factor Analysis (FA) is a multivariate statistical procedure that has many uses, three of which will be mentioned here and the others in Table 3.2 below. Firstly, factor analysis reduces a large number of variables into a smaller set of variables (also referred to as factors). Secondly, it establishes underlying dimensions between measured variables and latent constructs, thereby allowing the formation and refinement of

© Eseigboria Grace Paula Ijasan, 2018

theory. Thirdly, it provides construct validity evidence of self-reporting scales. According to Williams et al., (2010) the following are the advantages of FA

- Reduce the number of variables
- Examine the structure or relationship between variables
- Detection and assessment of unidimensionality of a theoretical construct
- Evaluates the construct validity of a scale, test, or instrument
- Development of parsimonious (simple) analysis and interpretation
- Addresses multicollinearity (two or more variables that are correlated)
- Used to develop theoretical constructs
- Used to prove/disprove proposed theories

Steps in conducting EFA

1. Carefully develop or use a carefully developed set of variables that measure specific domains
2. Determine the number of factors
    - Descriptive values
    - Eigenvalues
    - Residual variances
    - Tests of model fit
    - Root-Mean-Square Residuals (RMSR)
    - Chi-square
    - Root Mean Square Error of Approximation (RMSEA)
3. Interpret the factors
4. Determine the quality of the variables measuring the factors
    - Size loadings
    - Cross loadings
5. Determine the quality of the factors
    - Number of variables that load on the factor
    - Factor determinacy – correlation between the estimated factor score and the factor
6. Eliminate poor variables and factors and repeat EFA steps. (Browne, 2001; Thompson, 2004).

All of these steps are outlined in detail in sections 5.2 and 5.3.

© Eseigboria Grace Paula Ijasan, 2018

3.5.2 Confirmatory Factor Analysis (CFA)

The confirmatory factor analysis which is the third step is used to study how well a hypothesized factor model fits a new sample from the same population or a sample from a different population. The choice of the CFA is to establish a measurement model and at the same time replicate the EFA results which inform consistency. Here test for bias is carried out and the measurement model is assessed for invariant across the diversity dimensions (Chrobot-Mason, 2004; Chrobot-Mason & Aramovich, 2013). CFA is characterized by allowing restrictions on factor loadings, variances, covariances, and residual variances.

- To see if a factor model fits a new sample from the same population – the confirmatory aspect
- To see if the factor model fits a sample from a different population – measurement invariance
- Study the properties of individuals by examining factor variances, and covariances
  - Factor variances show the heterogeneity in a population
  - Factor correlations show the strength of the association between factors.
- Study the behaviour of new measurement items embedded in a previously studied measurement instrument
- Estimate factor scores
- Investigate an EFA more fully.

3.5.3 The CFA Model

The CFA model is the same as the EFA model with the exception that restrictions can be placed on factor loadings, variances, covariances, and residual variances resulting in a more parsimonious model. In addition residual covariances can be part of the model (Thompson, 2004).

Measurement Parameters – describe measurement characteristics of observed variables

- Intercepts
- Factor loadings
- Residual variances

Structural Parameters – describe characteristics of the population from which the sample is drawn

- Factor means

© Eseigboria Grace Paula Ijasan, 2018

• Factor variances

• Factor covariances

Metric of Factors – needed to determine the scale of the latent variables

• Fix one factor loading to one

• Fix the factor variance to one

Estimator

In CFA, a covariance matrix is analysed.

• ML – minimizes the differences between matrix summaries (determinant and trace) of observed and estimated variances/covariances

• Robust ML – same estimates as ML, standard errors and chi-square robust to non-normality of outcomes and non-independence of observations

Chi-square test of model fit

Tests that the model does not fit significantly worse than a model where the variables correlate freely – p-values greater than or equal to .05 indicate good fit

H_0: Factor model

H_1: Free variance-covariance model

If $p < .05$, H_0 is rejected

Note: We want large p

CFA modelling Estimation and Testing

• CFI – chi-square comparisons of the target model to the baseline model – greater than or equal to .96/.95

• TLI – chi-square comparisons of the target model to the baseline model – greater than or equal to .95/.95

• RMSEA – function of chi-square, test of close fit – less than or equal to .05 (not good at n=100)/.06

• SRMR – average correlation residuals – less than or equal to .07 (not good with binary outcomes)/.08

• WRMR – average weighted residuals – less than or equal to 1.00 (also good with non-normal and categorical outcomes – not good with growth models with many time points or multiple group models).

Degrees of Freedom for Chi-Square: Testing Against An Unrestricted Model

The p value of the χ^2 test gives the probability of obtaining a χ^2 value this large or larger if the H0 model is correct (we want high *p* values).

Degrees of Freedom:

© Eseigboria Grace Paula Ijasan, 2018

(Number of parameters in H_1) – (number parameters in H_0)

Number of H_1 parameters with an unrestricted Σ: $p\ (p + 1)/2$

Number of H_1 parameters with unrestricted μ and Σ:

$p + p\ (p + 1)/2$

A degrees of freedom example – EFA

• $p\ (p + 1)/2 – (p\ m + m\ (m + 1)/2 + p) – m^2$

Example: if $p = 5$ and $m = 2$, then $df = 1$

The final step in the analysis is to create a structural equation model (SEM) to test the hypotheses regarding the relationship between BBBEE implementation and the variables for fostering diversity and to assess if the relationship is consistent for the diversity dimensions focused on this study. The SEM for this work is presented in section 5.4 and 5.5.

3.5.4 Regression and Structural Equation Modelling SEM

Regression analysis is a statistical method that allows the examination of the relationship between two or more variables of interest. Regression analysis is a form of predictive modelling technique which investigates the relationship between a dependent (target) and independent variable (s) (predictor). This technique is used for forecasting, time series modelling and finding the causal effect relationship between the variables (Ray, 2014). Multiple regression is also used to test the influence of the demographic variables on the social perception of BBBEE. These demographic variables are presented in appendix 3 (the data collection instrument).

For the SEM, 2 key variables are adopted. These are the exogenous and endogenous variable. Exogenous Latent Variables: This is also known as independent variables, they are otherwise known as the predictors in regression. Endogenous Latent Variables: Endogenous latent variables are also known as dependent variables and are influenced by the exogenous variable. This influence could be direct or indirect. As discussed in chapter 1, three null hypotheses were tested. These are further discussed in section 5.5. The SEM for the relationships between the independent and dependent variables is presented on table 5.7.

3.6 Reliability and Validity

According to Easterby-Smith et al., (2002), one of the key requirements of positivist method is that for any research or knowledge to be useful, it should have universal validity. Validity is usually closely related to generalisation (Gummesson, 2000). It measures the quality of data

© Eseigboria Grace Paula Ijasan, 2018

collection method in order to determine if the instrument actually measures the concept that the researcher is interested in (Saunders et al., 2012). Assessing the validity of the instrument shows how closely the measures correspond to reality (Easterby-Smith et al., 2002). There are three ways of assessing the validity of the research instrument; specifically, questionnaires. They are, content validity, criterion related validity and construct validity (Gummesson, 2000; Kothari, 2004; Miller; Mitchell, 1996; Saunders et al., 2012; Yin, 2009). *Content validity,* refers to the extent the measuring instrument, which in this case are the questions in the questionnaire, provide coverage of the investigative questions. According to Kothari (2004) if the instrument contains a representative sample of the universe, the content analysis is good. It can also be determined by the panel of persons who shall judge how well the measuring instrument meets the standard (Kothari, 2004). *Criterion- related validity refers to the* ability of the questions to make accurate predictions. It can be used to measure the extent an instrument can predict a future performance and the extent the instrument is closely related to other measures of validity. This method of testing validity is not suitable as this study is focused on investigating the presence of elements that foster diversity and not seeking to make predictions on the performance of BEE companies. *Construct validity,* is mostly used when referring to constructs and it refers to the extent in which the questions measure the presence of the constructs the researcher intended them to measure. In this case, it assumes that these elements of fostering diversity exist in the companies and testing the construct validity is to establish the outcome of these elements, either in relation to the implementation of the BBBEE Act construct or the social identity theory and self-categorisation theory construct on which the operationalization of this study is based. This makes this method suitable for this study and will be conducted. In conclusion, the construct and content analyses tests for validity were considered the most suitable for this study.

Reliability on the other hand, tests the consistency of a measuring instrument in producing the same result if repeated at different times and by a different researcher. Gummesson (2000) explains reliability as situation where two or more researchers are studying the same phenomenon with similar purposes and both arriving at approximately same results. It ensures the efficacy of our measures and one way of doing this is improving both the sophistication of the measure and method of application. This is also known as standardisation of the measure to eliminate all forms of biases (both subject and observer's error and biases) (Easterby-Smith et al., 2002; Johnson & Duberley, 2000; Mitchell, 1996). Replication of established findings is seen as a way of eliminating bias and ensuring reliability. Mitchell, (1996) outlines three

© Eseigboria Grace Paula Ijasan, 2018

common ways of assessing reliability of a measure. They are; test-retest, internal consistency and alternative form. *Test-retest* refers to correlating data obtained from the same questionnaire but at different times but same or equivalent conditions (Chung, Pillsbury, Walters, & Hayward, 1998; Mitchell, 1996; Saunders et al., 2012; Yin, 2009). A precondition of this method is the time interval between the collections of data from the two questionnaires. It is believed that the longer the time interval the less likely for the respondents to give the same answers. It measures stability as similar scores are obtained with repeated testing with the same group of respondents (Miller). *Internal consistency* measures the consistency of responses to questions across a subgroup of questions or all the questions in the questionnaire. It tells the extent to which items on the test instrument are measuring the same thing. A most common approach is the **Cronbach's alpha** which involves correlating the responses to questions in the questionnaire with each other (Field, 2009; Miller; Mitchell, 1996; Tolmie, Muijs, & McAteer, 2011). *Alternative form* refers to comparing responses to alternative forms of the same questions. The alternative form of the main question are included in the same questionnaire to serve as check questions that will assess the reliability of the instrument (Field, 2009; Saunders et al., 2012). The downside of this method is the obvious lengthy questionnaire that would be created which would result in unreliable responses due to fatigue.

However, because both validity and reliability are bothered around the quality and accuracy of the questionnaire, they would be considered in the course of this research. To test the validity of questionnaires to be used in this study, both construct and content analyses was carried out in order to validate the internal consistency. Construct analysis is conducted to establish the operationalization of the construct identified. To conduct the content analysis, this study introduced the use of the pilot study. The aim of conducting the pilot study was to establish the effectiveness of the proposed questionnaire, to acquire more themes absent in literature, to ascertain that the proposed sample frame and technique will aid the research achieve its objective and to ascertain that the overall study is feasible. With the use of the pilot study, internal consistency is tested and measuring instrument is validated. In addition to validating the instrument, accuracy of transcript from interviews will also be established by sending back transcripts of interviews to interviewees for vetting (Dawson, 2009). To assess reliability of proposed questionnaire, this study will be adopting the test-retest approach as well as internal consistency approach using the **Cronbach's alpha coefficient.** The choice of approach is supported by the underpinning key literature, which are adapted to this study (Carmeli et al., 2009; Carmeli et al., 2010; Chrobot-Mason, 2004; Chrobot-Mason & Aramovich, 2013; McCuiston et al., 2004; Roberge & Van Dick, 2010).

© Eseigboria Grace Paula Ijasan, 2018

3.7 Chapter Summary and Conclusion

This chapter presented the various approaches to research which is an insight into the nature of the research and the researcher's theoretical perspective. It also explains the reason behind the choices made with regards to the research philosophy, paradigm, design and methods. All of which are made in alignment of the overall aim of this study, which is to assess the BBBEE initiative as tool that fosters diversity. Fig. 3.2 summarises the position of the researcher in this study.

Positivism	**Research Philosophy**	**Interpretivism**
Idealism	**Ontology**	**Realism**
Objectivity	**Epistemology**	**Subjectivity**
Value Free	**Axiology**	**Value Laden**
Method (Quantitative)		
Lit Review, Pilot study, and Questionnaires		

Figure 3.1: Summary of Research Position
Source: Author

The blue circled area and text written in blue depicts the position of the researcher. As shown in Fig. 3.1, the researcher takes the positivist stance, with the idealist reasoning of nature. It also believes that knowledge is acquired objectively and is value-free of personal opinions or value. This section also presented quantitative research method as the main method adopted for the study and questionnaires as data collection method.

Having discussed the research methodological positions of the researcher and some of the limitations encountered in the data collection, the next chapter introduces the measurement tool. As mentioned earlier, this work is adopting the organisational Culture Assessment Instrument OCAI questionnaire and customises to the SA context. The development and adaptation are presented in the next chapter.

© Eseigboria Grace Paula Ijasan, 2018

CHAPTER 4 Measurement Tool Development

This chapter aims to present the framework and methods adopted in developing the fostering diversity index. It will be recalled from section 2.7 that there are three emerging themes to measuring diversity. These three themes were shown on Figure 2.7. The central theories informing this research were the Social Identity Theory (SIT), Self-Categorisation Theory (SCT) and the Competing Values Framework (CVF). Of these three theories, the CVF is the only set one; which uses the OCAI as a measuring tool. However, the OCAI only measures culture. Since this research is more than just culture, two more perspectives are added. These are 'psychological empowerment' (see Maier 2002 & 2005; Chrobot-Mason & Aramovich 2013) and 'social perception of BEE' (see Cox 1991&2001).

Holistically, using a triangulated approach i.e. a combination of OCAI, psychological empowerment questions and social perceptions of BEE in the survey, it is expected that this will give a better indication of 'fostering diversity'. The results are discussed in chapter five, but this chapter discusses how the measuring tool for the research was developed.

This chapter discusses the different elements and conditions present in literature that promote and enhance diversity in the workplace and how these elements and conditions are fit into the framework for the development of the fostering diversity index. This chapter starts with a revisit of the Diversity Management schools of thought, a contextualisation of the peculiarity of the SA brand of inclusivity (or lack of it thereof) and the impact of the BBBEE act on the economy in general. As mentioned extensively in literature, the BBBEE is the main tool used by the SA government to achieve diversity and empowerment. This chapter is further subdivided into three sections. The first section unpacks this act in detail. This leads to section two, which is about the adaptation of the actual OCAI tool as well as the two other perceptions added. Section two also deals with the idea of psychological empowerment and the need for the inclusion of an aspect on the 'social perception' of BEES. Finally, section three wraps the chapter with a summary.

4.1 Diversity Management Perspectives

With the impact of globalisation and current focus on multiculturalism, there is a widespread appreciation of diversity, which is premised on the moral obligation to respect the uniqueness of individuals and the logical business benefit of market integration. This move to globalisation also changed the skills the corporate managers require from employees. Broad minded

© Eseigboria Grace Paula Ijasan, 2018

employees become fast easy catch as they deal effectively with colleagues and customers from many different backgrounds; seek to learn about and optimize the unique contribution inherent in the culture of each individual; anticipate the impact of cultural biases on business relationships and processes; and seek to remove obstacles to equity and inclusion for each individual (Combs, Nadkarni, & Combs, 2005). Booysen and Ngambi (2004) points out that in South Africa, the practise of diversity and the theory of diversity are very far from each other. They argued in agreement with Allard (2002), who said 'only very few companies have comprehensive diversity policies', while most have reduced the implementation of diversity initiatives to hiring quotas and superficial training on assimilation of different modes. For example, Dawkins and Ngunjiri (2008) asserts that the high-level reporting on diversity policies and programs by JSE companies is greatly influenced by the BBBEE requirements designed to increase the involvement of disadvantaged persons in the economy.

Based on the premise of the practise of diversity within companies, this study takes into cognisance the diversity management perspectives as developed by Thomas and Ely (1996, 2001). Thomas and Ely propose that management of diversity reflects how each company or organisation perceive and interpret it which invariably affects how they implement it. They developed a theoretical paradigm consisting of three different perspectives of how organisations perceive the responsibility of managing diversity. These perspectives are: fairness and discrimination, access and legitimacy, learning and effectiveness. However, as explained in chapter two, Podsiadlowski et al., (2013) argues that the fourth paradigm known as reinforcing homogeneity is equally important in understanding the task of managing diversity and implementation of diversity initiatives. The basis of the arguments of these authors can be seen as the deep-rooted influence of organisational culture which personifies a company as an entity with unique personality and structured way of life. This reasoning agrees with Combs et al., (2012) argument in their research on the implementation of Affirmative Action Policies (AAP). They stated that culture as a reflection of beliefs, values, behaviour and normative expectation of a collection of people reflects how they perceive, react or accept external interventions. People's attitudes toward these interventions are a function of the culture's general normative expectations regarding their collectivist, individualist and pluralistic orientations (Combs et al., 2012).

© Eseigboria Grace Paula Ijasan, 2018

4.2 The choice of OCAI as a part of the measuring tool

Over the years, there has been strong debate as to which instruments are best for understanding culture. On one hand, some argue that qualitative methods are best suitable for understanding culture. However, critics of the qualitative approach argue that qualitative approaches lack the breadth of analysis to conduct comparative studies among multiple cultures because of the excessive time and energy expended on only one organization's culture. On the other hand, other researchers argue that the quantitative approach is most suitable, but critics of the quantitative approach also argue that quantitative analysis methods such as questionnaires and survey instruments provide only a superficial level of cultural understanding.

It is therefore necessary that any such tool combine both approaches to leverage the advantages and disadvantages of both methods. The OCAI is one of such tools. The OCAI, a tool designed to identify existing organizational culture as a prelude to cultural change provides a diagnostic assessment of culture based on an examination of core values, shared assumptions, and common approaches to work (Cameron and Quinn, 1999).

Cameron and Quinn noted that although the quantitative measurement of culture is controversial, the OCAI's use of quantitative data gathered from multiple individuals within the organization, tapping into the core values and related assumptions woven into the organization provides a realistic representation of the organization's culture.

4.2.1 OCAI Four Factor Model

The OCAI uses a four-factor model to classify culture into two; stability versus flexibility in work approaches, and internal versus external focus of the organization Cameron and Quinn, 2006). These four factors provide the basis of cultural classification within the workplace. These four cultures are:

- **The Clan culture**: it is described by the flexibility and internal focus aspects of the OCAI and represents a family-style organization, where members of the organization are involved in decision making, and teamwork is an important aspect of work (Cameron and Quinn, 1999). This type of organizational culture emphasizes teamwork and employee development, with customers seen as partners (Cameron & Quinn, 1999). This culture promotes a humane work environment, with the managerial goal of empowering employees by gaining their participation, commitment, and loyalty. The

© Eseigboria Grace Paula Ijasan, 2018

OCAI assessment of the clan culture portrays it as a friendly place to work where people share a lot of themselves (Cameron & Quinn, 1999). It views leaders as mentors or parent figures and emphasises loyalty, tradition, and commitment (Cameron & Quinn, 1999). Through teamwork, participation, and consensus, a successful internal climate with a concern for people can be achieved (Cameron & Quinn, 1999).

- **The Adhocracy culture**: is derived from the term *ad hoc*, which refers to a temporary, specialized, dynamic unit (Cameron & Quinn, 1999). This type of organizational culture is described by the flexibility and external focus aspects of the OCAI and relies on innovation as a means of organizational functioning (Cameron and Quinn, 2006). This type of culture emphasizes specialization and rapid change within the organization and involves employees coming together to work on some projects and disbanding when the project is complete. Organizations with this type of culture are spurned into productivity when presented with a lack of boundaries and are not restricted by the absence of guidelines.

An organization possessing adhocracy culture can be seen in industries such as aerospace, software development, think-tank consulting, and filmmaking (Cameron & Quinn, 1999). The goal of these organizations is to be innovative and adaptable, as there is no form of centralized power or authority relationships (Cameron & Quinn, 1999). Within an adhocracy, "power flows from individual to individual or from task team to task team depending on what problem is being addressed at the time" (Cameron & Quinn, 1999). Therefore, individuals in an adhocracy are often unique risk takers who anticipate and understand change (Cameron & Quinn, 1999).

- **The Hierarchy culture**: is described by the internal focus and stability segment of the OCAI and focuses on stability in the functioning of organizations. This type of culture sets guidelines regarding how organizations should approach certain tasks (Cameron and Quinn, 2006). Its focus on the efficient running of an organisation is portrayed by a vertical approach to the levels in the organisational hierarchy and emphasises an environment that is relatively stable, where tasks and functions can be integrated and coordinated, uniformity in products and services can be maintained, and workers and jobs are under control (Cameron & Quinn, 1999). In this culture, success is defined by incorporation of decision-makers of clear authority, standardized rules and procedures,

© Eseigboria Grace Paula Ijasan, 2018

and control and accountability mechanisms (Cameron & Quinn, 1999). For organisations with this culture, individuals follow procedures, and leaders effectively coordinate and organize activity to maintain a smooth-running of the organisation (Cameron & Quinn, 1999). Such organisations are characterised by stability, predictability, and efficiency (Cameron & Quinn, 1999).

- **The Market culture**: the market refers to a type of organisation functioning as a market itself (Cameron & Quinn, 1999) is and this culture is described by the external focus and stability segment of the OCAI (Cameron and Quinn, 2006) and focuses on competitiveness and winning. The motivation of this type of culture is the need to gain advantage in the organisational niche. To achieve this, transactions with external bodies such as suppliers, customers, contractors, licensees, unions, regulators, etc. are rigorously pursued. Furthermore, the market operates primarily through monetary exchange because competitiveness and productivity in these organizations are dependent on strong external positioning and control (Cameron & Quinn, 1999).

OCAI is a measurement tool; however, the overarching framework that led to its development is the Competing Values Framework (CVF). According to Bremmer (2017), the CVF is the most used and useful framework for assessing organizational culture and organizational dynamics.

The central idea of the CVF is that it identifies the underlying dimensions of organizing that exist in almost all human and organizational activity. Asides these four cultures, OCAI also has six constructs/dimensions which are used to assess the cultures. These are explained in the next part of this section.

The OCAI allows predictions to be made due to the process of reciprocal opposition which in the context of this measure concern the factors diagonally opposite each other (Nelson and Gopalan, (2003). Nelson and Gopalan observed that the opposing clusters of values as applied to the OCAI factors' expected relationships with other organizational variables have been shown to carry inverted relationships with other outcome variables, and this notion has been. Cameron and Quinn, (2006) also noted that the conflicting cultural characteristics inherent in each diagonally-opposed factor have been supported by a managerial-level variant of the OCAI framework. Their findings revealed that the correlations between opposing factors were moderate-to-strong and negatively weighted. They therefore concluded that the OCAI organisational culture depends on alignments with the bisecting continua and also specifies the

© Eseigboria Grace Paula Ijasan, 2018

expected reciprocally opposing pattern of relationships between culture factors and other organizational variables of interest.

Cameron and Quinn (1991; 1999) noted that the OCAI questions represent six content dimensions (dominant characteristics, organisational leadership, management of employees, organisational glue, strategic emphases, and criteria for success), that represent fundamental cultural values and implicit assumptions about the way the organisation functions. These dimensions are as given below:

1 **Dominant characteristics:** this is the first dimension of the OCAI. It refers to the dominant values and organisational culture that an organisation has. If, for instance, an organisation's dominant culture is Market &Adhocracy, the organisation will tend to exhibit characteristics such as being goal oriented and if it is a clan culture, it will tend to have characteristics like flexibility and team work.

2 **Organisational Leadership:** this is the second dimension of the OCAI. This dimension of the OCAI emphasises that there is a correlation between leadership style and the culture type of an organisation.

3 **Management of employees:** this is the third dimension of the OCAI that deals with how the different organisational cultures affect how employees are treated.

4 **The organisational glue:** this is the fourth dimension of the OCAI. This dimension deals with how shared values affect the interpersonal relationship between members of an organisation. That is, the set of shared, underling values and understandings that characterise the organisation and act as a bonding factor for members.

5 **Define what areas of emphasis drive the organisation's strategy:** This is the fifth dimension of the OCAI that lays emphasis on the core values that drive an organisation's strategy. For instance, organisations with adhocracy culture emphasize innovations.

6 **Criteria for success:** this is the sixth dimension of the OCAI that focuses on the core values with which an organisation's effectiveness is measured. For instance, while efficiency is valued in a hierarchy culture, competition is valued in the market culture. That is, organisational success is viewed differently by different organisations based on the culture type of the organisation.

© Eseigboria Grace Paula Ijasan, 2018

Cameron and Quinn (2011) argued that the OCAI adequately addresses both the challenges in the quantitative as well as qualitative methods. They argued that in conducting comparisons among multiple cultures, quantitative approaches must be used but also reiterated the importance of creating a balance by the respondents to the survey instrument actually reporting underlying values and assumptions (culture) and not just superficial attitudes or perceptions (climate). This balance can only be achieved by using a scenario analysis procedure in which respondents report the extent to which written scenarios are indicative of their own organization's culture. The scenarios used serve as cues in revealing core cultural attributes. They further noted that the OCAI has been used to identify the current and preferred cultural types in thousands of organizations, and that it has been found to predict organizational performance (Cameron and Quinn, 1999).

To this end, Organisational Culture Assessment Instrument (OCAI) becomes very relevant to research of this nature because it has been well structured to elicit qualitative data as argued above that are relevant to the subject matter in the organisational set-up.

4.2.2 Reliability of the OCAI tool

There are several instruments used in measuring organizational culture. It is therefore necessary to choose the right tools among these many alternatives by considering the psychometric properties of the instrument (Jung, et al., 2009 and Lewis, 1996). This section presents review of related work that deployed OCAI so as to prove the validity of the OCAI as a measurement instrument of choice for this research.

In order to understand the validity of organizational culture instruments, Jung et al., (2009) reviewed the psychometric properties of 48 organizational culture instruments noted that 46% of the instruments demonstrated adequate internal consistencies and 21% of the instruments show adequate evidence for aggregating individual data to represent the entire organization. This leads to erroneous assumptions about organizational-level culture where these measures are used. Jung et al. further noted that 19% of the instruments presented adequate evidence of the dimensionality of the instrument. The paucity of reliable, validated measures of organisational culture is particularly problematic given the applied context in which these measures are often used when facilitating cultural change (Cameron and Quinn, 2011).

Kalliath et al., investigated the dimensionality and internal consistency properties of an early version of the OCAI (Quinn and Spreitzer, (1991) using a theoretically-driven approach known

© Eseigboria Grace Paula Ijasan, 2018

as confirmatory factor analysis (CFA) to model the validation. Their findings revealed excellent internal consistency indices Cronbach, (1951) for each of the four factors dimensionality of the OCAI. However, the study only sampled managerial and supervisory staff members. This is considered a major drawback for this study because it is assumed that sampling a wider range of employees in the organization may produce different and better results (Heritage, 2014). Further, no attempt was made to examine the validity of the instrument in relation to other workplace measures.

Zammuto and Krakower (1991) proposed a scale based on an earlier version of the OCAI with modification with the Market and Clan cultures removed due to concerns regarding survey length, resulting in a total of 14 items. The study revealed that the internal consistency of three of the four factors was satisfactory, except the hHierarchical factor which was found to have less than ideal reliability (a = .69).

Hartnell, et al., (2011) carried out a meta-analysis of the properties of the OCAI to determine the relationships between the culture factors and organizational effectiveness indicators except the Hierarchy culture. The findings of the study revealed positive correlations with job satisfaction and Clan, Adhocracy, and Market culture. The study further revealed the strength in similarities between the positive correlation of the Market culture to that of Clan culture.

Heritage et al., (2014) analysed the psychometric properties of the OCAI, by examining the factor structure and validity of the current version of the OCAI. The study addresses employee perceptions of organizational culture from both an ideal and current culture perspectives. It validates the OCAI by asking employees to provide details of their ideal and current organizational culture along the OCAI dimensions to provide a basis on which consistencies in culture conceptualisation across employee perspectives will be examined. Furthermore, this study examined model invariability across the ideal and current organizational culture perspectives. The findings of the study revealed that the four-factor model of the OCAI is supported by the confirmatory factor analyses and each factor had adequate internal consistency in both ideal culture (IC) and current culture (CC) models. These findings in agreement with those of Kalliath et al. and (Choi, et al., (2010)), demonstrate a four- factor model underlying the OCAI and confirms the reciprocally-opposing relationships between the factors presented by Cameron and Quinn. The study validated the four factors of culture (Clan, Adhocracy, Hierarchy, and Market), thus proving the psychometric properties of the OCAI and validating the instrument as a viable method of assessing organisational culture. The instrument

© Eseigboria Grace Paula Ijasan, 2018

also demonstrated predictive validity due to its array of significant relationships with job validation of the OCAI.

Cameron and Quinn (2011) stated that the OCAI adequately addresses both the challenges in the quantitative as well as qualitative methods. They argued that in conducting comparisons among multiple cultures, quantitative approaches must be used but also reiterated the importance of creating a balance by the respondents to the survey instrument actually reporting underlying values and assumptions (culture) and not just superficial attitudes or perceptions (climate). This balance can only be achieved by using a scenario analysis procedure in which respondents report the extent to which written scenarios are indicative of their own organization's culture. The scenarios used serve as cues in revealing core cultural attributes. They further noted that the OCAI has been used to identify the current and preferred cultural types in thousands of organizations, and that it has been found to predict organizational performance (Cameron and Quinn, 2011).

Cameron and Quinn (1991; 2011) the OCAI questions represent six content dimensions (dominant characteristics, organizational leadership, management of employees, organizational glue, strategic emphases, and criteria for success), that represent fundamental cultural values and implicit assumptions about the way the organization functions. A combination of these six dimensions with the Competing Values Framework (CVF's) four cultural types (clan, adhocracy, market, and hierarchy) elicit the fundamental organizing framework used by people when they obtain, interpret, and draw conclusions about information

Furthermore, the study revealed that the OCAI:

a. Uncovers the underlying organizational culture even though the culture is ambiguous, complex, difficult to observe and quantify and with non-linear socially constructed shared meaning.
b. Enables researchers to identify an organization's predominant cultural type as well as the relative strength of the four cultural types.
c. Enables the researcher to evaluate the degree to which the various aspects of the organization's culture are aligned.

To validate the OCAI, Cameron and Freeman (1991) carried out an organizational culture study of 334 higher education institutions, reflecting the entire population of four-year colleges and universities in the United States with a total of 3,406 respondents i.e., 12 to 20 people from

© Eseigboria Grace Paula Ijasan, 2018

each institution. The finding of their research revealed that that none of the organizations were characterized by one specific culture. That is, dominant cultures were incorporated in most institutions. Furthermore, the clan culture was found to be more frequent while the least was the market culture with 236 institutions having congruent cultures and 98 having incongruent cultures (Cameron & Quinn, 2011).

According to Cameroon and Quinn, the study conducted by Yeung, et al., (1991) tried to validate the OCAI. The study involved 10,300 executives in 1,064 businesses, averaging nine per business, most of which are listed on the Fortune 500 companies list. The respondents included human resource executives and various associates selected by the executives to complete the assessment instrument. A breakdown of the research's findings revealed that the reliability of the clan culture was .79, that of adhocracy culture reliability was .80, and that of the hierarchy culture was .76, while that of the market culture was .77, all of which the reliability coefficients exceeded satisfactory levels. Furthermore, the findings revealed that majority of the firms were dominated by the hierarchy culture (44 %), followed by the clan and adhocracy cultures with 15% and 14 %, respectively no firm dominated by the market quadrant. Also, all the firms had moderate emphasis on the market culture type with six percent of the firms having all the cultures equally dominant, and 22% having no culture emerge as dominant. The study therefore concluded that the OCAI is reliable.

Cameron and Quinn, also reported a study carried out by Zammuto and Krakower (1991). In the study, the OCAI was used to research culture in higher education institutions. The study sampled more than 1300 respondents with the sample comprising of 39% of administrators, 34% department chairpersons, and 27% trustees. The rating of their organisation culture by the respondents resulted in the following reliability coefficients: clan reliability = .82, adhocracy reliability = .83, hierarchy reliability = .67, and market reliability = .78. This also shows the validity of the OCAI as the result is consistent with other previous researches.

Cameron & Quinn, (2011) noted that with many other studies conducted to the best of their knowledge, the reliability of culture types revealed patterns consistent with those mentioned and as such, sufficient evidence has been produced regarding the reliability of the OCAI to create confidence that it matches or exceeds reliability of the most commonly used instruments in the social and organizational sciences.

© Eseigboria Grace Paula Ijasan, 2018

Berrio's (2003) used a variant of the OCAI to study the organizational culture of and describe the dominant culture type of Ohio State University (OSU) Extension. The study revealed statistically significant differences between the dominant Clan culture and the Market and Hierarchy culture types in both current and preferred situations after comparing the mean scores of Adhocracy, Market, and Hierarchy culture types with that of the dominant Clan culture exhibited, thus providing validity and reliability of the modified version of the OCAI and by extension, the OCAI as the findings are consistent with earlier studies conducted.

Scott, et al., (2003) presented a review of eight popular instruments for measuring organisational culture (CVF/OCAI, Organisational Culture Inventory, Harrison's Organisational Ideology Questionnaire, Mackenzie's culture Questionnaire, Survey of organisational culture, Corporate culture Questionnaire, Hofstede's Organisational Culture Questionnaire and Organisational Culture Survey). The study compared the instruments using five criteria (face validity, measure of current and desired culture, ease of administration, relevance to educational industry and ability to promote innovation and collaboration). The findings of the study revealed that OCAI is the most suitable instrument for measuring organisational culture as it meets all the above five criteria. That is, the OCAI has strong face validity, is easy to use and administer, measures the current as well as desired culture, and is relevant to the education industry. Furthermore, the adhocracy and the clan quadrants of the culture instrument reflect and integrate well with the innovation and multi-disciplinary culture.

Yu, and Wu (2009), noted the following advantages of the CVF and its matched scale OCAI have the following advantages:

i. It is the most reliable and empirically validated cross-cultural research tool.
ii. It is the most succinct. That is, the OCAI questionnaire includes only 24 items thus are very convenient for practical operations.

The study concluded that the CVF and its matched scale OCAI are very suitable for quantitative research in a Chinese context, especially for studies on organizational culture change and on identification of culture types related to organizational effectiveness.

Balogh, et al., (2011) highlighted several advantages of the OCAI. These advantages include:

© Eseigboria Grace Paula Ijasan, 2018

i. It is functional, feasible, pragmatic, and rational. That is, it can be used to evaluate key competences, which ca n be used in recognizing differences between the success of various organizations;
ii. It is time saving. That is, enables researchers to carry out organizational culture survey in a short time;
iii. It blends quantitative and qualitative elements.
iv. It is manageable. That is, it doesn't require the services of any outside expert and as such can be easily used by the organization's management;
v. It is valid. That is, it has been proved valid through theoretical and functional studies;
vi. It was created to distinguish various organizational cultures.

With a constancy show of negligible difference in all the usage of the OCAI as shown in the literatures above, it is therefore not out of place to say that the OCAI is reliable and valid to be used as a tool for this study.

4.3 Psychological Empowerment

In a study to examine the adequacy of BBBEE to address the need for psychological empowerment among black people, Mtembu, (2011) noted that psychological empowerment and structural empowerment are two sides of the same coin. He also opined that holistic empowerment cannot be achieved in the absence of either one of these two and that psychological empowerment is a necessary condition for economic empowerment. He further argued that the BBBEE policy is less efficacious as regards psychological empowerment because it does not address the essence of psychological disempowerment.

For several decades, diversity has been fostered by various factors. One of such prominent factors is psychological empowerment. According to Eisman, Zimmerman, Kruger, Reischl, Miller, Franzen, and Morrel-Samuels (2016) even though psychological empowerment may sound popular, yet it is important to note that the psychological empowerment being referred to here is entirely different from the individually oriented conceptions of empowerment because of its effect on the diverse employees.

Various scholars (Arciniega, & Menon, 2013, Eisman, Zimmerman, Kruger, Reischl, Miller, Franzen, and Morrel-Samuels 2016) have attempted to point out the distinction between the two concepts. Eisman, Zimmerman, Kruger, Reischl, Miller, Franzen, and Morrel-Samuels (2016) describes psychological empowerment as the psychological aspects of empowerment processes and outcome which occur as people participate in organizational and community

© Eseigboria Grace Paula Ijasan, 2018

settings while the individually oriented conceptions of empowerment portrayed empowerment in term of self-efficacy, the locus of control. Thus, the psychological empowerment referred to in this research focus more on empowerment processes and outcome.

According to Arciniega, & Menon (2013) psychological empowerment refers to the cognitive state of an individual which is characterized by a perceived sense of control, a perceived sense of competence and goal internalization. These three variables are the core of psychological empowerment. Psychological empowerment as a multi-faceted construct that reflects the various dimensions of being psychologically enabled. Explaining these three variables, Arciniega, & Menon, (2013) referred to the first variable which is the perceived control as a reflection of an individual's beliefs on autonomy, the second variable which is the perceived competence that refers to an individual's sense of efficacy coupled with a feeling of personal capability. While the third variable, which is goal internalization, refers to the energizing power of an individual which include organizational vision and goal and the individual's vision or goal. Thus, people conceive this concept as the positive integration of perceptions of personal control, a proactive approach to life, and a critical understanding of the socio-political environment that is rooted in social action framework which includes community change, capacity building, and collectivity.

For a very long time, countries like South Africa misconstrued psychological empowerment for individually oriented empowerment; they championed this course in both the private and public sector. Their campaigns were all geared towards attaining self-efficacy and achieving locus of control which was outside the psychological empowerment they were envisaging. Furthermore, they thought that the political power gained in 1994 would usher in the desired empowerment but unfortunately, their expectations were dashed because it did not result in the expected psychological empowerment. This, therefore, did not impact on the level of discrimination, inequality, marginalization, poverty, and powerlessness that remains pronounced in the nation. Stander and Rothmann (2010) posited that it is so unfortunate that even with national independence; both employees in the state and private organizations are not psychologically empowered. They still grapple with marginalization and discrimination because no organizational policy has been able to entrench individual's beliefs on autonomy and enhance their sense of efficacy. It was only until recently that the South African government became very conscious of the fact that to tackle discrimination and inequality or marginalization, they have to correct the government policies. Government's introduction of the Broad Based Black Economic Empowerment Act was a step to improving the Black

© Eseigboria Grace Paula Ijasan, 2018

Economic Empowerment (BEE) with the intent to energize employees in South Africa and enhance the feeling of personal capability and to entrench individual's beliefs on autonomy and enhance their sense of efficacy.

Whenever employees are acting independently, especially during times when there are crises in the organization, it is a liability. This is not empowerment at all; it is perceived as a "disempowering" organization because traditionally, all employees are expected to follow their superior officer's instructions as well as directives. Similarly, Orgambídez-Ramos and Borrego-Alés (2014) noted that power distance organizations, will not be susceptible to empowerment actions. In such organizations, decision-making is usually centralized within the top-level managers and is not quickly moved down the organizational hierarchy. In this type of organization, the management system has already made it difficult to incorporate the idea of empowerment into the corporate policy and organizational structure. Thus, this type of system will not be able to permit a perceived sense of control, a perceived sense of competence and goal internalization among the employees which are indications of psychological empowerment.

However, even though many organizations operate according to exact procedures, as a way to minimize ambiguity between superiors and their subordinates, Seibert, Wang, and Courtright (2011) argues that their employees still fall among the categories of the least psychologically empowered. Their reasoning behind this argument is that psychological empowerment doctrine can only support a work environment that is of low formalization; an organization with few policy manuals or detailed procedures and rules to afford the employees a certain level of flexibility so that their initiatives and discretion can be adapted. The absence of this implies increases in the level of bureaucracy which endangers and deepens discrimination and marginalization in the workplace.

It is not a typical thing in some South African organizations to see the employee believe so much in their leaders because they are yet to be psychologically empowered. Mainly because employers at the top level of management are unable and unwilling to empower subordinates resulting in a very ambiguous work environment which has been further intensified due to the societal changes and the challenges of the dispensation after 1994 when the nation obtained its independence (Kotze, Menon & Vos, 2007). According to the Seibert, Wang, and Courtright (2011), it is in a bid to psychologically empower the employees of affected organizations that several government organizations and even nongovernmental organizations have started to

© Eseigboria Grace Paula Ijasan, 2018

implement specific dynamic leadership approach that would enhance equality and minimize discrimination and marginalization in the workplace. Some of this approach includes; integrated command and leadership approach, and transformational leadership approach. These programs in the workplace have been tailored towards achieving Black Economic Empowerment (BEE) in South Africa.

Also, Dóci and Hofmans (2015) opined that organizational leadership that practices transformational leaders' style are expected to identify with their followers. They added that the followers must be ready to believe that they can have a positive impact on the organization to enhance psychological empowerment. Mehta and Ward (2017) concludes that South Africa's psychological empowerment can only be achievable in South Africa if government increases their involvement in the BBBEE and collaborate with the companies in the country to ensure that those companies reach a consensus with the members of the community in order to have a worker-led organisation and be centered less on government. This would promote the effective implementation of the BBBEE because all the appropriate stakeholders are involved. It would give the disadvantaged a sense of belonging thereby making them feel empowered. This would promote black capitalism and create an economy in which collectivized social actors play a central role in its development.

As seen in section 4.2.1 regarding the various characteristics of the six OCAI dimensions, below is an overview of the OCAI questionnaire themes/dimensions and what they mean.
In addition to the various characteristics of the six OCAI dimensions outlined in section 4.2.1, the following can be deduced from the OCAI questionnaire.

1. **Dominant Characteristics:** if the organisation is a very personal place, it is like an extended family and people seem to share a lot of themselves, it is an organisation with a clan culture, if it is a very dynamic entrepreneurial place, with people willing to stick their necks out and take risks, it is an organisation with adhocracy culture. If, however the organisation is very results oriented, focuses on getting the job done, with the people been very competitive and achievement oriented, the organisation possesses a market culture else if it is a very controlled and structured place with formal procedures governing what people do, it is dominated by a hierarchy culture.
2. **Organisational Leadership**: if leadership in the organisation is considered to portray mentoring, facilitating, or nurturing, it is an organisation with a clan culture, if it is considered to show entrepreneurship, innovating, or risk taking, it is an organisation with adhocracy culture. If, however the leadership in the organisation is seen to

© Eseigboria Grace Paula Ijasan, 2018

exemplify a no-nonsense, aggressive, results-oriented approach, the organisation possesses a market culture else if it is considered to exemplify coordinating, organising, or smooth-running efficiency, it is dominated by a hierarchy culture.

3. **Management of Employees**: if the management style in the organisation is characterized by teamwork, consensus, and participation, it is an organisation with a clan culture, if it is characterized by individual risk-taking, innovation, freedom, and uniqueness among employees, it is an organisation with adhocracy culture. If, however it is characterized by hard-driving competitiveness, high demands, and achievement, the organisation possesses a market culture else if it is characterized by security of employment, conformity, predictability, and stability in relationships, it is dominated by a hierarchy culture.
4. **Organisation Glue:** if the glue that holds the organization together is loyalty and mutual trust and the commitment to the organisation runs high, it is an organisation with a clan culture, if the glue that holds the organisation together is commitment to innovation and development with emphasis on the cutting edge, it is an organisation with adhocracy culture. If, however the glue is the emphasis on achievement and goal accomplishment coupled with aggressiveness and winning, the organisation possesses a market culture else if it is characterized by security of employment, conformity, predictability, and stability in relationships, it is dominated by a hierarchy culture.
5. **Strategic Emphases:** if the organisation emphasizes human development, high trust, openness and participation persist, it is an organisation with a clan culture, if an organisation emphasizes acquiring new resources and creating new challenges as well as trying new things and valuing prospecting for opportunities, it is an organisation with adhocracy culture. If, however it emphasizes competitive actions and achievement as well as hitting stretch targets and winning in the marketplace are dominant, the organisation possesses a market culture else if it is characterized by emphasis on permanence and stability, efficiency, control and smooth operations, it is dominated by a hierarchy culture.
6. **Criteria of Success:** if the organisation defines success on the basis of the development of human resources, teamwork, employee commitment, and concern for people, it is an organisation with a clan culture, if it defines success on the basis of having the most unique or newest products, it is a product leader and innovator with adhocracy culture. If, however it defines success on the basis of winning in the marketplace and outpacing the competition with competitive market leadership is key, the organisation possesses

© Eseigboria Grace Paula Ijasan, 2018

a market culture else if organisation defines success on the basis of efficiency, dependable delivery, smooth scheduling and low-cost production, it is dominated by a hierarchy culture.

However, this study will be seeking more direct perception of this psychological empowerment. The research instrument will be using questions that will determine how employees are integrated into the core fabric of their organisations. It will look at the depth of inclusiveness, clarity of career progression, level of job independence and opportunity for development.

4.4 Social Perception

The idea of 'social perception' was championed by Tajfel and Turner (1979). According to the author, groups (e.g. social class, family, football team etc.) which people belonged to are 'an important source of pride and self-esteem'. Groups give us a sense of social identity: a sense of belonging to the social world. Cox (1991) further hinted that 'inclusive culture especially in conjunction with competent leadership is a prerequisite for successful diversity management'.

Social perception refers to the way people try to understand the world around them. According to Harris, Rousseau, and Venter (2013), social perception is the process by which members of a particular society select, organise and interpret the input from their senses to give meaning and order to the world around them. Human perceptual system evolved people seeing the world based on what the world affords them. This implies that social perception is often shaped and influenced by the culture of that society. It was in line with this that Mazur (2010) explains that within culturally homogeneous groups, members will tend to communicate with each other more often and in a greater variety of ways, perhaps because they share worldviews and a unified culture resulting from in-group attachments and shared perceptions.

Harris, Rousseau, and Venter (2013) explain that if a significant number of employees have negative perceptions regarding the effectiveness of diversity management that means that organisations will need to focus on these perceptions regardless of their actual merit. That explanation implies that people's beliefs about the work environment or the effectiveness of diversity management are fundamental irrespective of whether their opinions are consistent with the fact or not. Their belief has a way of shaping their actions which if not well managed may result in reduced employee productivity within the workplace.

© Eseigboria Grace Paula Ijasan, 2018

Also, Southall (2014) noted that one dominant social perspective in South Africa by the DTI is that their expectation on the coverage and broadness of BBBEE was not achieved. Hence, they concluded that BBBEE is not as broad-based as they wish it would have been. They explained that there are other critical areas which the program was not able to capture. Southall (2014) further noted that one of their primary concerns on this issue of coverage is that the program allowed the creation of a black capitalist class to which the stakeholders of the program claimed that it was in the interest of the whole black. Their reason was that a "patriotic black bourgeoisie" was needed at that time of discrimination for economic growth and development to create and serve as a 'door opener' for its black compatriots. To the stakeholder, these reasons were not tenable because they see it as another way of narrowing the policy down and as well increasing the rate of discrimination even among the blacks (ANC, 2002). This position supports Twala (2014) that some members of the society perceive that the lack of broad-based empowerment is due to the narrow-mindedness of both the company management and its ownership. Twala (2014) noted that there is an urgent need for collective ownership programmes by working people and communities, in the form of joint enterprises and cooperatives. This would go a long way to correct the perception of the members of the stakeholders that the narrow-mindedness is due to some political undertone.

Furthermore, some stakeholders still feel that there is no fairness in BEE because the majority of the beneficiaries that they have come across are prominent blacks most especially those black people with some political affiliation with either present or past government (ANC, 2002). According to Shubane and Reddy (2007), stakeholders may be right in their opinion because this is an undeniable fact in a typical South African society which has resulted into a harsh bitter aftertaste of nepotism, corruption, and arbitrariness among the blacks who the BEE seems to be protecting.

Thus, the stakeholders are beginning to see that the government and most of the corporate organizations have lost focus on purpose and the aim of the BEE in the nation. Shubane and Reddy (2007) supporting this, noted that there seems to be a misplacement of purpose and priority as regarding the implementation of the BEE in South Africa. This because even though the policy is meant to empower the people, the establishment of a black middle class, poverty reduction and the redistribution of means of production to enhance the state of the economic activity of the formerly disadvantaged people who are majorly the blacks are yet to be achieved. From the assessment of the general opinion of the stakeholders, it is evident that the program has not in any way been able to reach out to the broader population as it is expected to do

© Eseigboria Grace Paula Ijasan, 2018

(Shubane and Reddy, 2007). Thus, a general consensus among stakeholders is that the program is not for the general public who are at a disadvantage in South Africa but instead the program is designed solely to profit the educated and those blacks that are wealthy and politically connected in the society.

Also, some members of the society perceived that the realization of the broad-based empowerment is the sole responsibility of South African companies since the government has failed on their part. To this end, these people have argued that it is important and even necessary for all South African companies to embrace some forms of collective ownership so the BBBEE program can be implemented efficiently and better sustained than it used to be in the previous years if it has ever been successful at all.

Another closer look at the people's opinion as presented in Twala (2014) revealed that, for over two decades, stakeholders have been nursing a negative view about the implementation of the BBBEE by companies which makes them think that the bulk of the work of the successful implementation lies in the hands of the companies since the government has failed in its role. They see the implementation of the BBBEE by companies as mere 'technical matter.' By this, they meant that instead of the all these South African companies to fully embrace and support the full implementation of the BBBEE policy they are only embanking on theoretical cum paper works to ensure that their companies meet up with the minimum requirements for BBBEE. This according to Twala (2014) has contributed significantly to low success rate recorded on the implementation of the policy. The public explains that if this situation is allowed to continue in these companies, the policy would eventually nose-dive.

Corroborating the stakeholder's view as stated above, Southall (2014) posited that the members of the public now see the companies in South Africa as merely applying the scorecard elements so that they maximize their contribution to the BBBEE project. This is a dishonest stance on the part of the companies because it is evident that the stakeholders can now read between the lines and now have a clear understanding of their scheming. But notwithstanding, they still feel that these companies can still make amendments, thus they recommended that the available options for effectively realizing the purpose of the BBBEE is that they should sincerely consider the ownership element, empower local and rural communities, attach Employment Equity to education efforts and ensure that they make use of the synergies of a linkage between Preferential Procurement and Enterprise Development. Like Shubane and Reddy (2007)

© Eseigboria Grace Paula Ijasan, 2018

suggested, that it is not economically right for a business class, as well as organizations, to allow their visions to be nurtured by mere lopsided political decision.

Bench Marks Foundation (2008) noted that stakeholders are of the view that BBBEE could be well implemented and more broad-based if more emphasis can be placed on increasing the rate of empowerment in both the local and rural communities because those are the places in South Africa where the largest population of the deprived, disempowered, marginalized and the discriminated against reside. They now see a strong need for the companies in South Africa to consult with communities in their neighborhood in order make these communities understand their approach to BBBEE and at the same time ensure that both companies and the communities identify common ground that would facilitate the successful implementation of BBBEE.

Bench Marks Foundation (2008) noted that the bulk of the blame for the past failure in implementing the BBBEE policy should not be on the government and the organizations alone. Stakeholders like the public should have a share in the blame as well. Especially those who have not been able to devise an effective means of channeling their perception to the companies even when there are several avenues which they could use to get their thought across. Bench Marks Foundation (2008) suggested that they can channel their views and opinion through their Community Perception Index, where their opinions on the companies around them can be made public. This would serve as a robust platform for bringing together the perspectives of both parties; the community's need and the companies' goals so that there can be alignment and balancing.

Besides, stakeholders have also explained that the companies should devise a means to guarantee the blacks in South Africa that BBBEE would not eventually become an institutionalized mechanism for safeguarding the political power interests of the ruling party as they have always perceived it to be. Thus, they explained that the rate of monitoring which, has been relegated to the background, be increased because the role of proper monitoring and evaluation is crucial to the success of any policy. Hence the process of monitoring and evaluation mechanism should be swiftly determined so that it would save the crisis looming over the BBBEE in South Africa.

To this light, 'social perception' was added as the third theme to be explored, a s shown in the questionnaire (see appendix). Six questions were included under the social perception theme. The reason for this is to enable the researcher to tease out the current state of the art in relation

© Eseigboria Grace Paula Ijasan, 2018

to what people are talking about with regards to BEE. That is why the 'current state' questions were included in the survey instrument.

It is also on the premise of the three themes discussed that this study developed three hypotheses to ascertain how well the implementation of the Act fosters diversity. Below are the null hypotheses which were tested.

H_{o1}: The culture of an organisation does not significantly influence the social perception of BBBEE of the respondents

H_{o2}: The psychological empowerment of the respondents does not significantly influence the social perception of BBBEE

H_{o3}: The culture of an organisation does not significantly influence the psychological empowerment of the respondents.

4.5 Chapter Summary and Conclusion

This chapter presented the research instrument -Fostering Diversity Index. It opens by revisiting the challenges of the BEE act in relation to the Previously Disadvantaged Individuals in SA. It helped in comparing the broad need for inclusion and diversity on a global scale with the local SA problem. Three theories were evaluated and the relevance of these theories are presented, this chapter has focused only on the development of the research instrument while the next chapter presents the findings from the data collection process. It was seen in this chapter that although the transformation framework has evolved towards a more inclusive approach, the transformation of the economy at the grass-roots level is very limited. In some instances, it was argued that initiatives like the Preferential Procurement Regulations have led to an increase in the cost of tendering, as tenderers are required to "submit many documents". Also, that some unskilled and unprepared PDIs are entering into companies with wrong mental attitudes of 'rights' rather than 'privileges. In all, it is almost conclusive that the BEE is here to stay and at best, what researchers can do is to find ways of enhancing it. In the context of this research, the contribution is by way of exploring the idea of BBBEE to see if it fosters diversity in the workplace. This is being done with the aid of a tool, the survey instrument, which is the Fostering Diversity Index. This survey instrument is a combination of a self-developed tool and the much acclaimed OCAI tool. In all, 49 questions are developed, 24 questions are from OCAI, 19 are based on the 'psychological empowerment' theme, while the last six are focused on social perception of the respondents (see Appendix 1)

© Eseigboria Grace Paula Ijasan, 2018

CHAPTER 5 Data Analysis and Interpretation

5.1 Introduction

This chapter presents the result of the data analysis conducted. The various tests that were conducted are Exploratory Factor Analysis (EFA), the reliability using Cronbach Alpha, Confirmatory Factor Analysis (CFA) and Structural Equation Modelling (SEM).

Exploratory Factor Analysis is used to detect the link between the observed and unobserved variables. As the name suggests, EFA explores or reduces large number of factors into few, by showing which factor loads on which latent factor. It is a statistical method used to build the model structure consisting of a set or many variables. EFA is one of the factor analysis methods used to identify the relationship between the manifest (observed) variables and the unobserved variable. Once the research uncovered which factors are linked, the CFA confirms to what extent the proposed model fits the data.

SEM Structural model represents the theory that shows how constructs are related to other constructs. According to Statistics Solutions (2018), structural equation modeling is also called causal modeling because it tests the proposed causal relationships. SEM provides a very general and convenient framework for statistical analysis that includes several traditional multivariate procedures (Hox and Bechger, 2007).

In SEM, interest usually focuses on latent constructs and psychological variables such as "intelligence" or "attitude" toward a brand (Rigdon, 1996). As this work focuses on diversity and factors that foster it, it is deemed necessary to conduct a structural model.

Before the presentation of the results from the study, descriptive statistic was conducted to determine the proportions and percentages of the general profile of the respondents.

5.2 Descriptive Statistics of the of Identified variables

The general profile of the respondents that were assessed in this study are current designation of the respondents, years of relevant work experience, number of years in current company, gender, race and sector that applies to respondents' company. The result is presented in Table 5.1

© Eseigboria Grace Paula Ijasan, 2018

Table 5.1: General Profile of Respondents

Variable	Subgroup	Frequency	Percentage (%)
Current Designation of respondents	Middle level management	121	44.8
	Lower level management	116	43.0
	Non-managerial	33	12.2
Years of relevant work experience	0-3 years	34	12.6
	4-9 years	154	57.0
	10 years and Above	82	30.4
Number of Years in current Company	0-3	34	12.6
	4-9	151	55.9
	10 and Above	85	31.5
Gender	Male	139	51.5
	Female	131	48.5
Race	Black	111	41.1
	White	102	37.8
	Coloured	38	14.1
	Indian	19	7.0
Company's Sector	Insurance	90	33.3
	Banks	90	33.3
	Financial Services	90	33.3

Table 5.1 shows that the current designation of the respondents was assessed based on managerial levels. They are the middle level management, lower level management and non-managerial. 121 (44.8%) of the respondents are in the middle managerial level, 116 (43%) are in the lower managerial level and 33 (12.2%) of the respondents are non-managerial staff. On the years of relevant work experience, 12.6% have between zero to three years relevant work experience, 57% of the respondents have between four to nine years working experience and 30% of the respondents have over nine years relevant working experience. As per the number of years the respondents have spent in the current company, 12.6% of the respondents have so far spent between zero and three years in their current company, 55,9% have spent between four and nine years in their current company and only 31. 5% of the respondents have spent 10 years and more in their current companies.

51.5% of the respondents in this study are males and 48.5% are females. 41.1% are blacks, 37.8% are whites, 37.8% are coloured and only 7% are Indians. An equal proportion of respondents were sampled from the various sectors. Each sector of Insurance, Banking and financial services have 90 respondents each representing 33.3%.

5.3 Interpretation of the Exploratory Factor Analysis and Reliability Results

This section presents the result of the exploratory factor analysis of the instrument used for the study. Exploratory Factor Analysis (EFA) was conducted for the OCAI to determine if the

© Eseigboria Grace Paula Ijasan, 2018

pattern of loadings of items will be the same as that of Cameron and Quinn (2011). Also, EFA is conducted separately for the psychological Empowerment Scale and the Social Perception of Workplace Diversity. Some terms that are used in this section are briefly described below:

Exploratory Factor Analysis: Exploratory Factor Analysis is used to detect the link between the observed and unobserved variables. It uses various extraction methods, but mostly used is the Principal Component Analysis (usually because it's the default extraction method in data reduction when using SPSS). It is usually used in the reduction of items for questionnaires (especially into subgroups that will be easily explainable). In this study, EFA was conducted to determine the extent to which observed variables (measurement variables or items) are related to the unobserved variable or construct.

Factors/components: In conducting an EFA, the word factor or component are used interchangeably. Factors in EFA represent the clumps or group in which items form during the EFA. Factors therefore are the subgroups of items formed based on the reduction technique carried (Pallant, 2011). For a data to be used in an EFA, some preliminary test must be done to assess the suitability of the data. In SPSS, the correlations matrix is produced, KMO test is conducted and Barlett's test of Spherity is also carried out. In EFA, inspection of the correlations between the items in the scale should generally be above 0.3 (Tabachnick and Fidell, 2007).

Kaiser-Meyer-Olkin (KMO): Kaiser Meyer Olkin test of sampling adequacy determines if the data is fit for the EFA test to be conducted. Field (2009) stated that the KMO value lies between zeroand one, and a very close value to one indicates that the pattern of correlations of the items in the scale are relatively compact and that the analysis would yield reliable factors. Kaiser (1970) recommends that values above 0.5 are barely acceptable, while values of 0.8 and above are suitable.

Bartlett's Test of Spherity: Bartlett's test of spherity measures the null hypothesis that the correlation matrix is an identity matrix. A correlation matrix is said to be an identity matrix when the entire diagonal is one and other elements zero. A significant test signifies that the correlation matrix is not an identical matrix (Field, 2009). If the Bartlett's test is significant, then the data can be used for the test.

© Eseigboria Grace Paula Ijasan, 2018

Factor Extraction Method: This involves determining the smaller number of subgroups (Factors) to be retained base on the analysis and the interrelationships between the items in the groups. There are various methods of factor extraction; from the SPSS menu, there is the Principal Component Analysis Method, Maximum Likelihood Method, and Principal Axis Factoring amongst others. The extraction methods commonly used are the Principal Component Analysis (PCA) and the Maximum Likelihood Method.

In deciding the number of factors to retain, various tests are carried out. Embedded in SPSS are Kaiser Criterion and Scree Plot.

Kaiser Criterion: Kaiser's criterion popularly known as the Eigen value rule compute the Eigen values for a correlation matrix of a set of items and then determine how many variables have values greater than one (Warne & Larsen, 2014). The disadvantage of this test is that it sometimes retains too many factors. Hence the need to scree plots to streamline or increase the number of factors to retain.

Scree Plot: Cartell's scree plot plots the graph of the eigenvalues obtained for the correlation matrix of the items in the scale. It is recommended by Cartell (1966) that factors (i.e. number of dots before the slope) above the elbow of the graph should be retained.

Eigen Values: Eigen values can simply be defined as the number of vectors in correlation matrix. The number associated with that vector e.g. 2v is said to be the eigenvalue. Hence two is said to be the eigenvalue of the vector. Simply put the eigenvalue for each factor tells how much variance in the variable is explained by the factor in which it belongs

Parallel Analysis: the parallel analysis is an additional analysis carried out to determine the number of factors to retain. It helps you to make a better decision as to the number of components to be retained. Decisions on the number of factors to retain are solely in the hands of the researcher /analyst. Eigen value, scree plot and parallel analysis (a simulation test) assist the analyst or research on the number of factors or components to retain.

Rotation Methods: In EFA, Rotation is usually done to simplify the interpretation of the factors found in the EFA result. Sometimes, when an EFA result is presented, it presents the factors in a rather more difficult way to determine the underlining structure, this rotation which is embedded in SPSS helps to shuffle the items so that one can easily determine what they are representing. The items loading unto the various factors extracted are rotated, items

© Eseigboria Grace Paula Ijasan, 2018

loading unto their factors means the questions with the same underlining structure coming together to form a factor. A factor is the same as unobserved variable; it's the coming together of these items that will aid the researcher in naming the factors extracted (that is gotten from the items). For instance, when four factors are extracted, it means the questionnaire has four underlying structures in it. The researcher can decide to use these factors separately later in the future for publication purposes, and can also decide to use the four factors together especially if they are correlated., to present a pattern of loading that can easily be interpreted (Pallant, 2011). There are two rotation methods in SPSS. They include Orthogonal (Uncorrelated) and Oblique (correlated). The orthogonal rotation method results in solution where the factors are not correlated, while the Oblique rotation method results in factors that are correlated. An example of orthogonal rotation method is Varimax rotation, while Direct Oblimin is an example of Oblique rotation method.

Communalities: Communalities are the proportion of each variable variance that could be explained by the factors. It is usually the sum of the squared factor loadings for the variables. Communalities are more or less communities. It's like the portion each item is playing in the factor it belongs to. So, if an item (statements/questions in the questionnaire) has a communality value of .60, and another has a value of 0.2, we say the item with 0.60 belongs more to that community than the item with 0.2 communality value. In essence, the communality value helps to determine if an item in a factor is actually part of that group.

The tables below give the item description as used in the analysis of the data. This will help in understanding their appearance in the loadings.

© Eseigboria Grace Paula Ijasan, 2018

Item Description as used in data analysis

Question 2 Organisational culture assessment

construct	Item description
a. Dominant characteristics	
Item 1-clan	Q2aN_1
Item 2- adhocracy	Q2aN_2
Item 3- market	Q2aN_3
Item 4-hierachy	Q2aN_4
b. Organisational leadership	
Item 1-clan	Q2bN_1
Item 2- adhocracy	Q2bN_2
Item 3- market	Q2bN_3
Item 4-hierachy	Q2bN_4
c. Management of employees	
Item 1-clan	
Item 2- adhocracy	Q2cN_1
Item 3- market	Q2cN_2
Item 4-hierachy	Q2cN_3
	Q2cN_4
d. Organisational glue	
Item 1-clan	Q2dN_1
Item 2- adhocracy	Q2dN_2
Item 3- market	Q2dN_3
Item 4-hierachy	Q2dN_4
e. Strategic emphases	
Item 1-clan	Q2eN_1
Item 2- adhocracy	Q2eN_2
Item 3- market	Q2eN_3
Item 4-hierachy	Q2eN_4
a. Criteria of success	
Item 1-clan	Q2fN_1
Item 2- adhocracy	Q2fN_2
Item 3- market	Q2fN_3
Item 4-hierachy	Q2fN_4

© Eseigboria Grace Paula Ijasan, 2018

Question 3 Psychological empowerment

items	Item description
1. I am confident about my ability to do my job.	Q3_1
2. The work that I do is important to me.	Q3_2
3. I have significant autonomy in determining how I do my job.	Q3_3
4. My impact on what happens in my department is significant.	Q3_4
5. My job activities are personally meaningful to me.	Q3_5
6. I can decide on my own how to go about doing my own work.	Q3_6
7. I really care about what I do on my job.	Q3_7
8. My job is well within the scope of my abilities	Q3_8
9. I have considerable opportunity for independence and freedom on how I do my job.	Q3_9
10. I am encouraged to express ideas/suggestions.	Q3_10
11. My suggestions are used to make decisions that affect me and my team.	Q3_11
12. My ideas are considered even when management disagrees with them.	Q3_12
13. Company decisions are explained to me.	Q3_13
14. I am told how my work fits into the company.	Q3_14
15. I am shown genuine concern for my individual success.	Q3_15
16. Attention is given to my concerns and discussed patiently.	Q3_16
17. I am shown areas which need more training.	Q3_17
18. I am provided with the assistance needed to solve problems on my own.	Q3_18
19. I am encouraged to solve problems with my team.	Q3_19
Question 4 Social perception of BBBEE	
	Item description
1. People now see members as equals.	Q4_1
2. People see each other beyond physical characteristics.	Q4_2
3. People have better relationship with others.	Q4_3
4. People see each other as an asset and not a liability.	Q4_4
5. People are more confident about being treated fairly.	Q4_5
6. People see a clear progression in their career.	Q4_6

With an understanding of the various concepts to be used in this section, the result of the EFAs is presented in the section that follows

5.3.1 Exploratory Factor Analysis of the Organisational Culture Assessment Inventory.

The 24 items in the OCAI were subjected to principal component analysis (PCA) using SPSS version 24. Prior to performing the PCA, the suitability of the data for factor analysis was

© Eseigboria Grace Paula Ijasan, 2018

assessed. Inspection of the correlation matrix revealed the presence of many coefficients 0.30 and above. The Kaiser-Meyer-Olkin value was 0.955. This is above the recommended 0.60 and the Bartlett's Test of sphericity reached statistical significance (0.00), thus supporting the factorability of the correlation matrix.

The Principal Component Analysis PCA reveals the presence of three components with eigenvalues exceeding one, explaining 49.27%, 5.39% and 5.00% of the variance respectively from component one to component three with the three components explaining a total of 59.65%**.** An inspection of the scree plot reveals a clear break after the first component and then another break after the third component (see appendix two). Using Catells's (1966) scree plot, it was decided to retain these three components (although the Parallel analysis supports the retention of only one factor (Component one) by showing one component with Eigen values exceeding the corresponding criterion values for a randomly generated data matrix of same size (24 variables X 270 respondents). It is seen from Table 5.2 that component one was the dominant factor. This suggests that most of the observed variables are being explained by one factor. To aid interpretation of the items in their factors, a varimax rotation was performed of which no result was produced because all items in the scale had only one underlying structure. The three components showed a number of strong cross loadings. Based on these tests, it was decided to retain the three factors. But the component matrix shows that only one factor could be retained. The summary of the items and their loadings in each component is presented in Table 5.2 below.

Table 5.2: COMPONENT MATRIX FOR OCAI (NOW)

Component Matrix				COMMUNALITIES
	Component			
	1	2	3	
Q2cN_3 Management style here is characterised by hard driving co mpetitiveness, high demands and achievement. – NOW	.775			0.678
Q2aN_3 The organisation is very result oriented. People are very c ompetitive and achievement orientated. – NOW	.773			.670

© Eseigboria Grace Paula Ijasan, 2018

Q2aN_1 The organisation is a very personal place. People share a l ot of themselves – NOW	.773			.650
Q2cN_4 Management style here is characterised by security of emp loyment, conformity, predictability and or stability in relationships. – NOW	.746			.571
Q2bN_2 The leadership here is generally considered to exemplify e ntrepreneurship, innovating, or risk taking – NOW	.745			.666
Q2aN_2 The organisation is a very dynamic entrepreneurial place. People are willing to take risks – NOW	.743			.650
Q2dN_1 The glue that holds the organisation together is loyalty or mutual trust. – NOW	.739			.596
Q2cN_1 Management style here is characterised by teamwork, con sensus and participation – NOW	.735			.568
Q2aN_4 The organisation is a very controlled and structured place. Formal procedures govern what people do – NOW	.715		.358	.664
Q2bN_1 The leadership here is generally considered to exemplify mentoring, facilitating, or nurturing – NOW	.709			.590
Q2eN_1 The organisation emphasises on human development. Hig h trust, openness and or participation persist. – NOW	.702			.569
Q2eN_2 The organisation emphasises on acquiring new resources a nd creating new challenges – NOW	.697		-.303	.600
Q2dN_2 The glue that holds the organisation together is commitme nt to innovation and development. – NOW	.697			.543
Q2eN_3 The organisation emphasises on competitive actions and a chievement. Gaining market place dominance – NOW	.695			.593
Q2bN_3 The leadership here is generally considered to exemplify a no-nonsense, aggressive, result focused – NOW	.687			.559
Q2dN_3 The glue that holds the organisation together is the emphas is on achievement and goal accomplishment. – NOW	.685			.484
Q2fN_1 Success is defined on the basis of development of human r esources, teamwork, employee commitment and concern for people. – NOW	.684	.304		.569
Q2bN_4 The leadership here is generally considered to exemplify, coordinating, organising, process efficiency – NOW	.683		.350	.592
Q2cN_2 Management style here is characterised by individual risk taking, innovation, freedom and or uniqueness. – NOW	.677		.383	.605

© Eseigboria Grace Paula Ijasan, 2018

Q2eN_4 The organisation emphasises on permanence and stability. Efficiency, control and smooth operation is key. – NOW	.674			.605
Q2dN_4 The glue that holds the organisation together is formal rule s and policies. – NOW	.658			.510
Q2fN_2 Success is defined on the basis of having the most unique or newest product – NOW	.637	.419		.614
Q2fN_3 Success is defined on the basis of winning in the market a nd outpacing competition. – NOW	.626	.354		.542
Q2fN_4 Success is defined on the basis of efficiency. dependable d elivery, smooth scheduling and low-cost production are crucial. – NOW	.546	.484	.312	.629
% of Extracted loading of the PCA	49.27	5.39	5.00	
Extraction Method: Principal Component Analysis.				
a. 3 components extracted.				

The items are labelled based on their appearance in the questionnaire and the constructs they represent. For instance, Q2fN_2 is question two (Q2) Criteria of Success in OCAI (f) and item two, *Success here is defined on the basis of having the most unique or newest product* (N_2) which describes the adhocracy culture. See Appendix 1 for questionnaire.

Since the component matrix produced only one factor, (The one factor indicates that though three components were extracted, all the items in the questionnaire loaded to component one, implying that the data used for the study of OCAI has only one underlying structure. With only one factor produced, it will be impossible to carry out a CFA on the OCAI, Cameron had four factors/components), it was decided to enforce a four-factor solution to determine if the loadings will be like that of Cameron and Quinn (2011).

In enforcing a four-factor solution, the 24 items in the OCAI were subjected to factor analysis using the Maximum Likelihood extraction method (ML) in SPSS version 24. Prior to performing the ML, the suitability of the data for factor analysis was assessed. Inspection of the correlation matrix revealed that generally, most of the items correlated above 0.3, the KMO measure of sampling adequacy is 0.96 and the Bartlett's test of spherity is significant (0.00). The Maximum Likelihood extraction method was used because of the intention to carry out a confirmatory Factors analysis later in the study. This test is appropriate because it allows for a range of computation of indexes of goodness of fit.

© Eseigboria Grace Paula Ijasan, 2018

With the four factors solution using maximum likelihood extraction method, the first component explained 47.43%, the second component explained 3.51%, and component three and four explained 3.16% and 1.86% respectively. The rotated solution explained 20.01% variance for the first component, the second component explained 15.41%, components three and four explained 11.89% and 8.65% respectively. The four factor solutions have a total variance of 55.96% (See Table A6 in Appendix). The rotated component matrix of the Four Factors solution obtained is presented in the table 5.3 below

Table 5. 3: Four factor solution of maximum likelihood extraction of OCAI

	Factor				Communalities
	1	2	3	4	
Q2aN_2 The organisation is a very dynamic entrepreneurial place. People are willing to take risks – NOW	.737				.702
Q2aN_1 The organisation is a very personal place. People share a lot of themselves – NOW	.657				.667
Q2bN_2 The leadership here is generally considered to exemplify entrepreneurship, innovating, or risk taking – NOW	.654				.603
Q2aN_3 The organisation is very result oriented. People are very competitive and achievement orientated. – NOW	.623	.427			.645
Q2bN_1 The leadership here is generally considered to exemplify mentoring, facilitating, or nurturing – NOW	.603				.553
Q2bN_3 The leadership here is generally considered to exemplify a no-nonsense, aggressive, result focused – NOW	.533				.484
Q2dN_1 The glue that holds the organisation together is loyalty or mutual trust. – NOW	.504			.425	.575
Q2cN_4 Management style here is characterised by security of employment, conformity, predictability and or stability in relationships. – NOW	.494	.427			.547
Q2dN_3 The glue that holds the organisation together is the emphasis on achievement and goal accomplishment. – NOW	.425				.447
Q2aN_4 The organisation is a very controlled and structured place. Formal procedures govern what people do – NOW	.419	.628			.610

© Eseigboria Grace Paula Ijasan, 2018

Q2cN_2 Management style here is characterised by indivi dual risk taking, innovation, freedom and or uniqueness. – NOW		.612			.554
Q2cN_3 Management style here is characterised by hard driving competitiveness, high demands and achievement. – NOW	.468	.585			.645
Q2bN_4 The leadership here is generally considered to ex emplify, coordinating, organising, process efficiency – NOW		.572			.511
Q2eN_4 The organisation emphasises on permanence and stability. Efficiency, control and smooth operation is key. – NOW		.552	.530		.621
Q2dN_4 The glue that holds the organisation together is f ormal rules and policies. – NOW		.506			.449
Q2cN_1 Management style here is characterised by team work, consensus and participation - NOW	.428	.483			.584
Q2fN_4 Success is defined on the basis of efficiency. dep endable delivery, smooth scheduling and low-cost production are crucial. – NOW		.460	.414		.419
Q2eN_3 The organisation emphasises on competitive acti ons and achievement. Gaining market place dominance – NOW			.632		.605
Q2eN_2 The organisation emphasises on acquiring new r esources and creating new challenges – NOW	.429		.549		.571
Q2fN_3 Success is defined on the basis of winning in the market and outpacing competition. – NOW			.478		.429
Q2eN_1 The organisation emphasises on human develop ment. High trust, openness and or participation persist. – NOW	.406		.439		.515
Q2fN_1 Success is defined on the basis of development o f human resources, teamwork, employee commitment and concern for people. – NOW				.556	.592
Q2dN_2 The glue that holds the organisation together is c ommitment to innovation and development. – NOW	.441			.503	.551
Q2fN_2 Success is defined on the basis of having the mo st unique or newest product – NOW			.475	.490	.548
(Total)Variance Explained (54.96%)	**20.01 %**	**15.41 %**	**11.89 %**	**8.65 %**	

© Eseigboria Grace Paula Ijasan, 2018

Reliability	**Cronbach alpha**	0.912	0.887	0.809	0.766	
	Inter-item correlation means	0.547	0.497	0.464	0.523	

Table 5.3 shows that all the items loaded strongly into their factors with some few cross loadings. Though the items that cross loaded, loaded higher in the factors they belong to. The values of the communalities indicate that items correlated well within their Factors. Meaning all the 24 observed variables were rightly grouped. The Cronbach alpha values for the various factors are an indication that the instrument is reliable. Factor one has a reliability index of 0.912 with an inter-correlation mean of 0.547; Factor two has a reliability index of 0.887 with an inter-item correlation mean of 0.497. Factor three has a reliability index of 0.809 with an inter-item correlation mean of 0.464 and factor four has a reliability index of 0.766 with an inter-item correlation mean of 0.523.

As observed in the four factors loadings, the pattern of loadings the data produced was quite different from that of Cameron and Quinn (2011). It was therefore decided to select each item into their respective culture type as it was in the OCAI. This was to ascertain the strength of their reliability index. The result is presented in Table 5.4

Table 5.4: COMPONENT SCORE MATRIX LOADINGS (ENFORCING FACTORS AS IT WAS IN THE OCAI

	COMPONENTS				Communalities
	Clan	Market	Hierarchy	Adhocracy	
Q2aN_1 The organisation is a very personal place. People share a lot of themselves – NOW	.796				0.634
Q2dN_1 The glue that holds the organisation together is loyalty or mutual trust. – NOW	.784				0.615
Q2cN_1 Management style here is characterised by teamwork, consensus and participation - NOW	.771				0.594
Q2eN_1 The organisation emphasises on human development. High trust, openness and or participation persist. – NOW	.760				0.578
Q2bN_1 The leadership here is generally considered to exemplify mentoring, facilitating, or nurturing – NOW	.755				0.569

© Eseigboria Grace Paula Ijasan, 2018

Q2fN_1 Success is defined on the basis of devel opment of human resources, teamwork, employee commitment and concern for people. – NOW	.753				0.567
Q2aN_3 The organisation is very result oriented. People are very competitive and achiev ement orientated. – NOW		.790			0.624
Q2cN_3 Management style here is characterised by hard driving competitiveness, high demands and achievement. – NOW		.775			0.600
Q2eN_3 The organisation emphasises on compet itive actions and achievement. Gaining market place dominance – NOW		.743			0.552
Q2dN_3 The glue that holds the organisation tog ether is the emphasis on achievement and goal accomplishment. – NOW		.739			0.547
Q2bN_3 The leadership here is generally consid ered to exemplify a no-nonsense, aggressive, result focused – NOW		.735			0.540
Q2fN_3 Success is defined on the basis of winni ng in the market and outpacing competi tion. – NOW		.674			0.454
Q2eN_4 The organisation emphasises on perma nence and stability. Efficiency, control and smooth operation is key. – NOW			.785		0.617
Q2bN_4 The leadership here is generally consid ered to exemplify, coordinating, organi sing, process efficiency – NOW			.785		0.617
Q2aN_4 The organisation is a very controlled an d structured place. Formal procedures g overn what people do – NOW			.783		0.613
Q2dN_4 The glue that holds the organisation tog ether is formal rules and policies. – NOW			.750		0.563
Q2cN_4 Management style here is characterised by security of employment, conformity , predictability and or stability in relation ships. – NOW			.731		0.534

© Eseigboria Grace Paula Ijasan, 2018

Q2fN_4 Success is defined on the basis of effici ency. dependable delivery, smooth sche duling and low-cost production are crucial. – NOW				.659		0.434
Q2bN_2 The leadership here is generally consid ered to exemplify entrepreneurship, innovating, or risk taking – NOW					.790	0.624
Q2aN_2 The organisation is a very dynamic entr epreneurial place. People are willing to take risks – NOW					.774	0.600
Q2eN_2 The organisation emphasises on acquiri ng new resources and creating new challenges – NOW					.760	0.577
Q2dN_2 The glue that holds the organisation tog ether is commitment to innovation and development. – NOW					.741	0.548
Q2cN_2 Management style here is characterised by individual risk taking, innovation, freedom and or uniqueness. – NOW					.677	0.459
Q2fN_2 Success is defined on the basis of havin g the most unique or newest product – NOW					.672	0.452
	Alpha value	0.863	0.838	0.843	0.831	
	Inter-item correlation means	0.511	0.462	0.473	0.450	

Table 5.4 shows that with the data, each item loaded strongly onto their respective culture type with each component having a high reliability index. The communalities also indicate that each of the items correlated moderately with their respective culture type. Items loading strongly means that the items will load with a very high score in its factor and very low or not at all in other factors.

5.3.2 Exploratory Factor Analysis and Reliability of the Psychological Empowerment Scale.

Same as was done in the preceding section, the 19 items in the psychological empowerment scale was subjected to principal component analysis (PCA) using SPSS version 24. Prior to performing the PCA, the suitability of the data for factor analysis was assessed. Inspection of the correlation matrix revealed the presence of many coefficients 0.30 and above. The Kaiser-

© Eseigboria Grace Paula Ijasan, 2018

Meyer-Olkin value was 0.84, which is above the recommended 0.60 and the Bartlett's Test of sphericity reached statistical significance (0.00), thus supporting the factorability of the correlation matrix.

The PCA reveals the presence of five components with eigenvalue exceeding one, explaining 34.08%, 9.71%, 8.31%, 6.09% and 5.70% of the variance respectively from component one to component five. However, an inspection of the Scree plot revealed a clear break after the first component and then another break after the third component (See Appendix, Table b3). Using Catells's (1966) scree plot, it was decided to retain three components. The parallel analysis further supported the retention of three components because only the eigenvalues of the three components exceeded the corresponding criterion values for a randomly generated data matrix of same size (19 variables X 270 respondents).

The three-component solution explained a total variance of 52.11%, with component one contributing 20.54%, component two contributing 16.34% and component three contributing 15.53% of the variance of the rotated sum of square loadings (see Appendix, Table b7). To aid the interpretation, a varimax rotation was performed. The rotation revealed the presence of a simple structure. The three components showed a number of strong loadings unto their factors. The summary of the items and their loadings in each component is presented in Table 5.5a.

Table 5.5a: Pattern/structure Matrix for PCA with Varimax Rotation for the Three Factor Solution of 'Psychological Empowerment'

	Component			
	1	2	3	
Q3_11 My suggestions are used to make decisions that affect me and my team	.795			.649
Q3_10 I am encouraged to express ideas/suggestions	.793			.651
Q3_9I have considerable opportunity for independence and freedom on how I do my job.	.692			.578
Q3_8 My job is well within the scope of my abilities.	.644			.467
Q3_12 My ideas are considered even when management disagrees with them.	.629			.478
Q3_6 I can decide on my own how to go about doing my own work.	.491			.321
Q3_7 I really care about what I do on my job.	.482			.285
Q3_19 I am encouraged to solve problems with my team	.470			.314
Q3_2 The work that I do is important to me.		.897		.816

© Eseigboria Grace Paula Ijasan, 2018

Q3_1 I am confident about my ability to do my job.			.833		.719
Q3_3 I have significant autonomy in determining how I do my job.			.731		.703
Q3_4 My impact on what happens in my department is large.			.624		.525
Q3_5 My job activities are personally meaningful to me.			.520		.417
Q3_15 I am shown genuine concern for my individual success				.805	.697
Q3_14 I am told how my work fits into the company				.717	.537
Q3_16 Attention is given to my concerns and discussed patiently				.691	.516
Q3_13 Company decisions are explained to me				.648	.455
Q3_17 I am shown areas which need more training				.615	.435
Q3_18 I am provided with the assistance needed to solve problems on my own				.395	.336
Variance Explained		**20.54%**	**16.34%**	**15.53%**	
Reliability	**Alpha value**	**0.829**	**0.841**	**0.782**	
	Inter-item correlation mean	**0.379**	**0.512**	**0.374**	

Table 5.5 shows that all the items loaded strongly (items loading strongly means that the items will load with a very high score in its factor and very low or not at all in other factors.) to their respective factors and the communalities values indicate that the items correlated moderately with their respective factors.

The reliability value for each factor was done using Cronbach Alpha reliability test. The Table shows that factor one had a reliability index of 0.829 with an inter-item correlation mean of 0.379, while factor two has a reliability index of 0.841 with an inter-item correlation mean of 0.512 and factor three has a reliability index of 0.782 with an inter-item correlation mean of 0.374. The communalities values of all the items show that the items are all related.

5.3.3 Exploratory Factor Analysis and Reliability of the 'Social Perception' of BBBEE in organisation scale.

The six items in the social perception of BBBEE in organisation scale were subjected to principal component analysis (PCA) using SPSS version 24. Prior to performing the PCA, the suitability of the data for factor analysis was assessed. Inspection of the correlation matrix revealed the presence of many coefficients of 0.30 and above. The Kaiser-Meyer-Olkin value was above .60 and the Bartlett's Test of sphericity reached statistical significance (0.00), thus supporting the factorability of the correlation matrix.

© Eseigboria Grace Paula Ijasan, 2018

The principal component analysis revealed the presence of two components (factors) with eigenvalues exceeding one, explaining 34.04% and 24.86% of the variance respectively. An inspection of the Scree plot revealed a clear break after the second component, therefore using cartels Scree plot, two factors retention was supported. This was further supported by the parallel analysis which showed that two components exceeded the corresponding criterion values for a randomly selected generated data matrix of the sample size. The two-component solution explained a total variance of 58.90 % with component one contributing 31.10% and component two contributing 27.80% after rotation. To aid the interpretation of these two factors, Varimax rotation was performed. The rotated solution revealed the presence of simple structure. The two components showed a number of strong loadings, and all variables loading substantially on the component to which they belong. The summary of the items and their loadings in each component is presented in Table 5.5b below.

Table 5.5b: Pattern/structure Matrix for PCA with Varimax rotation for two factor solutions in Social Perception of BBBEE in organisation scale.

Rotated Component Matrix				communalities
		Component		
		1	2	
Q4_2 Q4. With the implementation of BEE - People see each other beyond physical characteristic		.854		0.729
Q4_1 Q4. With the implementation of BEE - People now see members as equals		.733		0.571
Q4_3 Q4. With the implementation of BEE - People have better relationship with others		.614		0.487
Q4_5 Q4. With the implementation of BEE - People are more confident about being treated fairly			.803	0.645
Q4_6 Q4. With the implementation of BEE - I see a clear progression in my career			.774	0.604
Q4_4 Q4. With the implementation of BEE - People see me as an asset and not a liability		.467	.528	0.497
Total Variance Explained		31.10	27.80	
RELIABILITY	ALPHA VALUE	0.62	0.56	
	mean of inter-item correlation	0.35	0.30	

The reliability value for each factor was done using Cronbach Alpha reliability test. The Table shows that factor one had a reliability index of 0.62 with an inter-item correlation mean of 0.35,

© Eseigboria Grace Paula Ijasan, 2018

while factor two has a reliability index of 0.56 with an inter-item correlation mean of 0.30. The communalities values of all the items show that the items are all related.

The Preliminary tests carried out for the OCAI, Psychological Empowerment Scale and Social Perception Scale revealed that the data used is factorable. The EFAs conducted revealed that the data used for the study produced a Four Factor Solution for the OCAI, three factors solution for the psychological Empowerment Instrument and two factors Solution for the Social Perception Instrument. All the instruments used for this study were reliable. This means that the adaptation and adoption of all the scales are pertinent to the Fostering diversity index developed and used for this study.

The exploratory factor analysis has shown how the tested factors in the survey instrument loaded, varimax rotation was used in the PCA to establish the relationships. This establishment of the factors to be retained in the various scales form the basis for the confirmatory factor analysis. In the confirmatory factor analysis, if the data used actually fit the various factors extracted for the scales or not is established. The next section presents the CFA results.

5.4 Interpretation of the Confirmatory Factor Analysis (CFA) Results

The various factors extracted from the Exploratory Factor Analysis, were further tested using a theory driven test. The main reason for the CFA is to determine if the data from the study suit the various factors extracted in the scales of the instrument used for the study. In this section of the study, the questions that are to be answered are:

1. From the 24 items OCAI instrument, are four factors clearly identifiable construct as measured by the number of items that are loaded to them?
2. From the 19 items of the psychological empowerment scale, are the three factors clearly identifiable construct as measured by the number of items in each factor?
3. From the six items of the social perception scale, are the two factors solution clearly identifiable construct as measured by the number of items in each factor?

The questions were first answered by validating the measurement model, and to satisfy this validity procedure, convergent validity, construct or composite reliability and discriminant validity was conducted on the factors extracted for the various scales, after which the modelling fitting was assessed.

Convergent Validity: Convergent validity is established when the measured variables within a latent variable are all correlated. In establishing a convergent validity, each item in the scale should be highly correlated, and this is done by inspecting the standardized loadings of

© Eseigboria Grace Paula Ijasan, 2018

items onto their respective factor, calculating the Average Variance Extracted (AVE) and calculating the composite or construct reliability.

According to Jgaskin (2017), when assessing the standardized loadings of items onto their factors, it is based on sample size. The smaller the sample size, the higher the loadings. Based on this research's sample size, it was suggested that the following loadings values is acceptable for convergent validity. This significant loading size for this study is from 0.35.

Table 5.6: Significant Loadings of Items based on Sample Size

Sample size	Significant loading size
50 – 99	0.75 - 0.60
100- 149	0.55- 0.50
150- 199	0.45
200-249	0.40
250-349	**0.35**
350 and above	0.30

But regardless of sample size, it was suggested that 0.5 and above could be an acceptable level, but a good standardized loading of 0.70 and above is better (Pallant, 2011).

Average Variance Extracted (AVE): The average variance extracted is the sum of the squared standard loadings divided by the sum of squared standard loading plus the sum of indicator measurement errors. Zait and Bertea (2011) stated that the AVE value for each construct should be at 0.50.

Construct or composite Reliability: it measures the overall reliability of a set of items loaded onto a latent construct. This value should be 0.7 or higher to indicate adequate convergence. But 0.60- 0.70 is acceptable if other indicators of the convergent validity are good.

Discriminant Validity: Discriminant validity is the extent to which an unobserved variable (factor) discriminates against other unobserved variables. In discriminant validity, the correlation among the factors should be low. According to Farrell and Rudd (2009), a scale is said to have discriminant validity if a latent (unobserved) variable is able to account for more variance in the observed variables associated with it than with measurement errors (unmeasured influences) and other unobserved variable within the conceptual framework. To

© Eseigboria Grace Paula Ijasan, 2018

determine the discriminant validity, the squared correlation of the factors is compared to the square root of the average variance extracted. An instrument is therefore said to have discriminant validity when the square root of the average variance extracted is greater than the squared correlation of the factors.

5.4.1 Analysis of the Convergent and Discriminant Validity of the OCAI

For the convergent validity of the OCAI instrument, the standard loadings of items onto their factors was presented, the average variance explained, and the composite reliability table was also presented in the Tables 5.7 and 5.8 respectively.

Table 5.7: Standardized Factor Loadings of Construct Items

	Construct Statement	Standard Factor Loading
Factor 1		
Q2dN_3	The glue that holds my organisation together is the emphasis on achievement and goal accomplishment	0.660
Q2cN_4	Management style here is characterised by security of employment, conformity, predictability and or stability in relationships	0.740
Q2dN_1	The glue that holds my organisation together is loyalty or mutual trust	0.725
Q2bN_3	The leadership here is generally considered to exemplify a no nonsense, aggressive, result focused	0.694
Q2bN_1	The leadership here is generally considered to exemplify mentoring, facilitating, or nurturing	0.725
Q2aN_3	My organisation is very result oriented. People are very competitive and achievement oriented.	0.783
Q2bN_2	The leadership here is generally considered to exemplify entrepreneurship, innovating, or risk taking	0.766
Q2aN_1	My organisation is a very personal place. People share a lot of themselves	0.790
Q2aN_2	My organisation is a very dynamic entrepreneurial place. People are willing to take risks	0.782
Factor 2		
Q2fN_4	Success here is defined on the basis of efficiency. dependable delivery, smooth scheduling and low-cost production are crucial.	0.550
Q2cN_1	Management style here is characterised by teamwork, consensus and or participation	0.738

© Eseigboria Grace Paula Ijasan, 2018

Q2dN_4	The glue that holds my organisation together is formal rules and policies.	0.670
Q2eN_4	My organisation emphasises on permanence and stability. Efficiency, control and smooth operation is key	0.681
Q2bN_4	The leadership here is generally considered to exemplify, coordinating, organising, process efficiency	0.706
Q2cN_3	Management style here is characterised by hard driving competitiveness, high demands and achievement.	0.807
Q2cN_2	Management style here is characterised by individual risk-taking, innovation, freedom and or uniqueness.	0.721
Q2aN_4	My organisation is a very controlled and structured place. Formal procedures govern what people do	0.754
Factor 3		
Q2eN_1	My organisation emphasises on human development. High trust, openness and or participation persist.	0.550
Q2fN_3	Success here is defined on the basis of winning in the market and outpacing competition.	0.738
Q2eN_2	My organisation emphasises on acquiring new resources and creating new challenges	0.670
Q2eN_3	My organisation emphasises on competitive actions and achievement. gaining market place dominance	0 .681
Factor 4		
Q2fN_2	Success here is defined on the basis of having the most unique or newest product	0.713
Q2dN_2	The glue that holds my organisation together is commitment to innovation and development	0.708
Q2fN_1	Success here is defined on the basis of development of human resources, teamwork, employee commitment and concern for people.	0.754

Table 5.7 shows the standardized loadings of the items to their constructs. All the items loaded above 0.6 except for Q2fN_4 in factor two (Success here is defined on the basis of efficiency. dependable delivery, smooth scheduling and low-cost production are crucial) and Q2eN_1 in factor three (My organisation emphasises on human development.). All the items are significantly loaded. The significance of the items loading into their factors makes it easy to understand the relationships in the items. Looking at factor one, it can be seen that the dominant culture loaded into that factor is the Market culture type.

The Average Variance Extracted and Composite Reliability is calculated using the excel worksheet by Micheal Korchia. The results of the AVE and Composite Reliability calculated is presented in table 5.8.

© Eseigboria Grace Paula Ijasan, 2018

Table 5.8: AVE and Composite Reliability of the OCAI based on the four factors extracted using Maximum Likelihood extraction method

	Constructs Name	AVE	Construct Reliability
F1	Clan-focused Market culture	0.550	0.916
F2	Hierarchy focused multi culture	0.500	0.888
F3	Strategic Mixed Market culture	0.440	0.759
F4	Adhocracy focused culture	0.526	0.769

Table 5.8 shows that all the factors except for F3 exceeded 0.5 hence meet the minimum standard for convergent validity. The composite or construct reliability are all above 0.7. Based on the results from the various test (standard loading assessment, AVE calculated, and discriminant validity calculated), it was concluded that convergent validity was established**.** Factor one is called the Clan-focused Market because the items loaded into this factor, even though they are more geared towards the market culture, it had characteristics of the clan culture that gave it some of the humaneness of the clan culture. Factor two is the Hierarchy focused multi culture because Hierarchy stands out as the dominant culture but all other cultures are also present. Factor three is named Strategic market culture because market is the dominant culture but going by the six dimensions of an organisation, its strength is geared to the strategic emphases. Factor four is so named because Adhocracy is the dominant culture, but criteria of success has a touch of the Clan culture.

This means that the choice of a quantitative method of analysis is apt for this study. Which agrees with Cameron and Quinn, (2011) the argument that quantitative method of analysis must be used when conducting comparisons among multiple cultures.

Discriminant Validity

To establish the Discriminant Validity the square root average variance extracted should be greater than the squared factor correlation. The result is presented in Table 5.9

Table 5.9: Discriminant Validity of the Four Factors solution of the OCAI based on the four factors extracted using ML extraction method

	Factor correlation	Squared Factor correlation	√AVE_1, √AVE_2		DISCRIMINANT VALIDITY
F1<-->F2	.886	0.785	0.74	0.71	Not Established
F1<-->F3	.873	0.762	0.74	0.66	Not Established
F1<-->F4	.830	0.689	0.75	0.73	Established
F2<-->F3	.800	0.640	0.71	0.66	Established
F2<-->F4	.812	0.659	0.71	0.73	Established
F3<-->F4	.895	0.642	0.66	0.73	Established

© Eseigboria Grace Paula Ijasan, 2018

Table 5.9 shows that the square root of the average variance calculated are greater than the square of the correlation between each factor. Expect for that of F1 and F2; and F1 and F3. Discriminant validity is therefore established. Since the discriminant validity of four out of the six factors correlation was established, the instrument is said to have discriminant validity.

5.4.2 Analysis of the Convergent and Discriminant Analysis of the OCAI as obtained by Cameron and Quinn (2011)

Convergent Validity: convergent validity is said to achieved, when each item (observed variables) correlates strongly with the unobserved variables (this is seen in the standardized loadings). The value ranges between zero and one. But from 0.60 is the accepted level. Also, the composite reliability should exceed 0.7, and the average variance explained (AVE) must exceed the variance due to measurement errors. AVE should be more than 0.5.

Table 5.10: Standardized Factor Loadings of Construct Items

Items	Item Label	Factor	Estimate
Q2fN_1	Success here is defined on the basis of development of human resources, teamwork……	Clan	0.659
Q2eN_1	My organisation emphasises on human development. High trust, openness….	Clan	0.688
Q2dN_1	The glue that holds my organisation together is loyalty or mutual trust	Clan	0.736
Q2cN_1	Management style here is characterised by teamwork, consensus and or participation	Clan	0.716
Q2bN_1	The leadership here is generally considered to exemplify mentoring, facilitating, or nurturing	Clan	0.708
Q2aN_1	My organisation is a very personal place. People share a lot of themselves	Clan	0.773
Q2fN_2	Success here is defined on the basis of having the most unique or newest product	Adhocracy	0.599
Q2eN_2	My organisation emphasises on acquiring new resources and creating new challenges.	Adhocracy	0.663
Q2dN_2	The glue that holds my organisation together is commitment to innovation and development.	Adhocracy	0.688
Q2cN_2	Management style here is characterised by individual risk-taking, innovation, freedom and or uniqueness.	Adhocracy	0.631
Q2bN_2	The leadership here is generally considered to exemplify innovating, or risk taking	Adhocracy	0.720
Q2aN_2	My organisation is a very dynamic entrepreneurial place. People are willing to take risks	Adhocracy	0.734

© Eseigboria Grace Paula Ijasan, 2018

Q2fN_4	Success here is defined on the basis of efficiency. dependable delivery, smooth scheduling and low-cost production are crucial.	Hierarchy	0.550
Q2eN_4	My organisation emphasises is on efficiency, control and smooth operation is key	Hierarchy	0.695
Q2dN_4	The glue that holds my organisation together is formal rules and policies.	Hierarchy	0.677
Q2cN_4	Management style here is characterised by security of employment, conformity, predictability and or stability in relationships.	Hierarchy	0.740
Q2bN_4	The leadership here is generally considered to exemplify, coordinating, process efficiency	Hierarchy	0.715
Q2aN_4	My organisation is a very controlled and structured place. Formal procedures govern what people do	Hierarchy	0.735
Q2fN_3	Success here is defined on the basis of winning in the market and outpacing competition	Market	0.585
Q2eN_3	My organisation emphasises on competitive actions and achievement. gaining market place dominance	Market	0.661
Q2dN_3	The glue that holds my organisation together is the emphasis on achievement and goal accomplishment.	Market	0.652
Q2cN_3	Management style here is characterised by hard driving competitiveness, high demands and achievement	Market	0.758
Q2bN_3	The leadership here is generally considered to exemplify a no-nonsense, aggressive, result focused	Market	0.662
Q2aN_3	My organisation is very result oriented. People are very competitive and achievement oriented	Market	0.751

From the table it is seen that the majority of the items have standard loading to between 0.60 and 0.75. These loadings are not high, as they are just above the threshold of 0.50. Three of the items loaded below point 0.6.

AVE and Construct Reliability

Using the excel worksheet by Micheal Korchia to determine the average variance extracted and construct or composite reliability. The result is presented in Table 5.11 below.

© Eseigboria Grace Paula Ijasan, 2018

Table 5.11: AVE and Composite Reliability of the OCAI based on the Cameron four factor extraction

	Constructs Name	AVE	Remark	Construct or composite Reliability	Remark
Clan	Clan Culture	0.51	Established	0.86	Established
Adhocracy	Adhocracy Culture	0.46	Not Established	0.83	Established
Market	Market Culture	0.46	Not Established	0.84	Established
Hierarchy	Hierarchy Culture	0.47	Not Established	0.84	Established

From Table 5.11, it is seen that only 'clan culture' had the expected AVE of 0.5. The other factors have an average variance extracted below .5. The composite or construct reliability are all above 0.70. The average variance explained value was not met while the factors had composite reliability. This result shows the data lacks convergent validity for the factors extracted.

Discriminant Validity

To establish the Discriminant Validity the square root of the AVE calculated must be greater than the squared factor correlation. The table below shows the values we used to establish the Discriminant Validity.

Table 5.12: Discriminant Validity of the Four Factors solution of the OCAI based Cameron extraction pattern.

	Factor correlation	Squared Factor correlation	√AVE_1, √AVE_2		DISCRIMINANT VALIDITY
Clan <--> adhocracy	1.053	1.11	0.71	0.69	Not Established
Clan <-->hierarchy	0.894	0.80	0.71	0.69	Not Established
Clan<--> market	1.006	1.01	0.71	0.69	Not Established
Adhocracy <--> hierarchy	0.921	0.84	0.69	0.69	Not Established
Adhocracy<-->market	1.051	1.01	0.69	0. 69	Not Established
Heir <--> market	0.998	0.98	0.69	0.69	Not Established

Table 5.12 shows that the square root of the average variance explained was less than the squared correlations between the factors. There were also Heywood's cases, where factors correlated above 1.0. The discriminant validity the factor loadings was not established. According to Farrell (2010), if discriminant validity is not established, this means that

© Eseigboria Grace Paula Ijasan, 2018

"constructs [have] an influence on the variation of more than just the observed variables to which they are theoretically related" and, consequently, "researchers cannot be certain results confirming hypothesized structural paths are real or whether they are a result of statistical discrepancies".

With the convergent and discriminant validity not met, the data from the study did not fit the pattern of extractions as obtained by Cameron (where six items loaded respectively onto the clan, adhocracy, market and hierarchy cultures types). Because the discriminant validity was not established for all the factors extracted, modelling fitting using this pattern of loading will not be appropriate.

5.4.3 Analysis of the Convergent and Discriminant Analysis of the Psychological Empowerment scale

To access the convergent validity of the psychological empowerment instrument, the standard factor loadings of the scale were assessed, and items loadings should be greater than 0.60, also the Average Variance Explained (AVE) should be 0.50 or greater and the composite reliability should be greater than 0.7. The table below shows the standardized factor loadings to access the validity.

Table 5.13: Standardized loadings of the items onto their respective Factors (Psychological Empowerment)

Items	Construct Statement	Standardized factor scores
FAC 1		
Q3_19	I am encouraged to solve problems with my team	0.48
Q3_7	I really care about what I do on my job	0.46
Q3_6	I can decide on my own how to go about doing my own work.	0.51
Q3_12	My ideas are considered even when management disagrees with them.	0.66
Q3_8	I have considerable opportunity for independence and freedom on how I do my job.	0.60
Q3_9	I have considerable opportunity for independence and freedom on how I do my job.	0.72
Q3_10	I am encouraged to express ideas/suggestions	0.77
Q3_11	My suggestions are used to make decisions that affect me and my team	0.75
FAC 2		
Q3_5	My job activities are personally meaningful to me.	0.45

© Eseigboria Grace Paula Ijasan, 2018

Q3_4	My impact on what happens in my department is significant.	0.55
Q3_3	I have significant autonomy in determining how I do my job.	0.73
Q3_1	I am confident about my ability to do my job.	0.85
Q3_2	The work that I do is important to me.	0.91
FAC3		
Q3_18	I am provided with the assistance needed to solve problems on my own	0.50
Q3_17	I am shown areas which need more training	0.60
Q3_13	Company decisions are explained to me	0.56
Q3_16	Attention is given to my concerns and discussed patiently	0.64
Q3_14	I am told how my work fits into the company	0.62
Q3_15	I am shown genuine concern for my individual success A	0.79

Table 5.13 shows that in factor one, five out of the eight items loaded above 0.60, while three items loaded below 0.60. In factor two, three out of the five items loaded above 0.60 while two of the items loaded below 0.60. In factor three, four out of the six items loaded above 0.60 while two of the items loaded below 0.60. In all, majorities of the items in their respective factors loaded above 0.60. Since majority of the items loaded above 0.60, the AVE was then calculated for each factor. The result is presented in Table 5.14

Table 5.14: AVE and construct reliability of the factors extracted in the Psychological Empowerment scale

	Constructs Name	AVE	Construct Reliability
FAC1	Organisational identification	0.39	0.84
FAC2	Identity freedom	0.52	0.84
FAC3	Mutual enabler	0.39	0.79

Table 5.14 shows that the average variance calculated was low for FAC1 (factor one - 0.39) and FAC3 (factor three - 0.39), but factor two have an AVE value that is above 0.50. The values of the construct reliabilities were all above 0.7 indicating that the construct extracted were reliable. As outlined on Table 5.13 earlier, it shows that the observed variables relating to personal meaning of job, feeling impact of what happens in the department and importance of work were all important to the respondents in terms of their perception of psychological empowerment variables.

© Eseigboria Grace Paula Ijasan, 2018

Discriminant Validity

In establishing the discriminant validity of the instrument for psychological empowerment, the square root of average variance explained calculated for each factor must be greater than the square of the correlation. The table for discriminant validity of the psychological empowerment scale is presented in Table 5.15 below.

Table 5.1: Discriminant Validity of the Factors in the Psychological Empowerment Scale

	Factor correlation	Squared Factor correlation	√AVE_1,√AVE_2	DISCRIMINANT VALIDITY
F1<-->F2	.48	0.23	0.62 0.72	Established
F1<-->F3	.58	0.33	0.62 0. 62	Established
F2<-->F3	.39	0.15	0.72 0.62	Established

Table 5.15 shows that the Discriminant Validity for the various factors extracted in the psychological empowerment scale were established. With the convergent and discriminant validity established, modelling fitting can then be done using the data.

5.4.4 Analysis of the Convergent and Discriminant analysis of the Social perception of BBBEE

To access the convergent validity of the instrument, the standard factor loadings of the scale items was assessed; also, the Average Variance Explained (AVE) and Composite reliability was calculated. Table 5.16 shows the standardized factor loadings to access the validity for the social perception instrument.

Table 5.16: Standardized Item loadings for Social Perception of BBBEE

	Factors	Items Standard loadings Values
Q4_3	F1	0.400
Q4_1	F1	0.526
Q4_2	F1	0.933
Q4_4	F2	0.390
Q4_6	F2	0.585
Q4_5	F2	0.713

As seen the Table 5.16, only Q4_2 (With the implementation of BEE - People see each other beyond physical characteristic) and Q4_5 (With the implementation of BEE - People are more confident about being treated fairly) were

© Eseigboria Grace Paula Ijasan, 2018

higher than the recommended 0.60 values for item loadings, the rest were below the recommended value of 0.60.

Table 5.17: AVE and construct reliability values

Factors	Factor or construct label	AVE	Decision	Construct reliability	Decision
DIV1	Inclusiveness	0.45	Below recommended	0.69	Not established
DIV2	Equal treatment	0.33	Below recommended	0.59	Not established

From the AVE calculated and the values for the construct reliability, the social perception of BBBEE did not achieve convergent validity. From Tables 5.16 and 5.17, the convergent validity of the social perception could not be established. The factors or constructs are named as such because the loaded items were designed to look at the social perceptions of the implementation of BBBEE in the area of inclusiveness and equal treatment. These will be further elaborated in the following section.

Discriminant Validity

Table 5. 18: Discriminant Validity of the Social perception Instrument

	Factor correlation	Squared factor correlation	√AVE_1, √AVE_2	DISCRIMINANT VALIDITY
F1<-->F2	0.116	0.013	0.67 0.57	Established

The Value the square root of the AVE of the factors are higher than the squared factor correlation, therefore the discriminant validity for the instrument was established. With the establishment of the convergent and discriminant validities of the various scales used in the study, the confirmatory factor analysis was then conducted.

Before the presentation of the CFA results, the following section explains briefly the basic concept of Confirmatory Factor Analysis.

Confirmatory Factor Analysis: Confirmatory Factor analysis (CFA) is used when a relationship is postulated between the observed variables (measurement items) and the underlining factors gotten in the EFA based on knowledge of the theory or from empirical research. Because CFA model focuses on links between unobserved variables and the observed variables, it is done within the framework of Structural Equation Modeling (SEM). In SEM, it is called the measurement Model. The CFA concentrate more on validating a model and does

© Eseigboria Grace Paula Ijasan, 2018

not explain the relationship between constructs. It represents how observed variables come together to represent constructs. It checks for validity and reliability. CFA confirms a hypothesized factor structure. As regards this study, it tests how well the observed variables in the EFA fits well into the fFactors that have been extracted (Tabachnick and Fidell, 2007).

AMOS: AMOS is analytical software used for path analysis, Structural Equation Modeling and Confirmation Factor Analysis. It is owned by IBM SPSS. The software is an Add-on module in IBM SPSS. AMOS stands for Analysis of Moment Structures. This software was used for the CFA and SEM tests.

Observed Variables: The observed variables are usually items in a questionnaire. In CFA, a rectangular box is used to denote observed variables. The observed variables are also known as measurement variables

Latent or Unobserved Variables: The unobserved variables are the underlining structure of the observed variables. For instance, the factors (factor 1-4 or component 1-4) in the EFA are described as the latent or unobserved variables. In SPSS AMOS, it is represented by the oval shape. The oval is also used to represent errors terms that may influence the model that is being built.

Measurement Errors: Measurement error according to business dictionary is the difference between the actual value and the value obtained by the measurement. Sometimes, these errors could be caused by factors such as the mood of the respondent as at the time the measurement is being taken.

Model Fit: In confirmatory factor analysis, the major interest is the extent to which the hypothesized model adequately describes the sample data. This model fit process is determined by goodness of fit indices such as the chi-squared test, CMIN/DF, RMR, GFI, AGFI, NFI, CFI, TLI, and RMSEA amongst others.

Chi-squared test: The chi squared test assesses the magnitude of difference between the sample and the fitted covariance matrix (Hu and Bentler, 1999). A chi squared value closer to zero is an indication of a good fit. According to Tabachnick and Fidell (2007) the value of chi squared for a just-identified model generally equals zero and has no degrees of freedom. If = 0, the model perfectly fits the data (i.e., the predicted correlations and covariance's equal their observed counterparts). As the value of chi square increases, the fit of an over identified model becomes increasingly worse. Chi squared values is known to be sensitive to sample size, the larger the sample size, the larger the value of the chi squared, and the probability value associated with the chi will become significant.

© Eseigboria Grace Paula Ijasan, 2018

Degree of freedom: this is the number of values in the model that is free to vary without violating any constraint imposed on it.

CMIN/DF: This is the value obtained by dividing the chi-squared value obtained by the degree of freedom. The CMIN/DF is said to produce a satisfactory fit if the value is less than 0.50.

Root Mean squared Residual (RMR): The Root Mean squared Residual are the squared root of the difference between average standardized residual of the hypothesized model's covariance matrix and the observed model's covariance matrix. A RMR value of 0.02 or less than indicates a satisfactory fit (Tanbachnick and Fidell, 2007).

Goodness of Fit Index (GFI): This is a measure of fit between the hypothesized and the observed model's covariance matrices.

Adjusted Goodness of Fit Index (AGFI): The AGFI corrects the GFI which is affected by number of indicators in each unobserved variable. GFI and AGFI value 0.95 and greater is adjudged a satisfactory fit.

Normed Fit Index (NFI): The Normed Fit Index test the extent to which the chi squared value of the hypothesized model differ from that of the null or baseline model (Bentler, 1990). NFI value of 0.95 and above is considered a satisfactory fit (Cangur & Ercan, 2015).

Comparative Fit Index (CFI): The Comparative Fit Index (CFI) test the extent to which the tested model is superior to the alternative model. It analyses the model fit by examining the difference between the data and the hypothesized model, while adjusting for the influence of the sample size. CFI value of 0.95 is adjudged a satisfactory fit (Hu & Bentler, 1999).

Tucker- Lewis Index (TLI): Tucker- Lewis Index was developed by Tuker and Lewis (1973) because of the disadvantage of the NFI which is affected by sample size. The TLI value in CFA is not affected by sample size. The higher the value of the TLI, the better the model fits. It is generally accepted that TLI value of 0.95 signifies a satisfactory fit.

RMSEA: Known as Root Mean Squared Error of Approximation, is an index of the difference between the observed covariance matrix per degree of freedom and the hypothesized covariance matrix which the model denotes. The RMSEA value smaller than 0.05 indicates a satisfactory fit, while values between 0.05 an 0.08 are good or acceptable fit (i.e. close to satisfactory fit), while 0.08- 1.00 is neither good nor bad and above 1.00 is a bad fit (Cangur & Ercan, 2015).

The result of the fit indexes will be produced by statistical software used for the confirmatory Factor Analysis (i.e. AMOS, version 24). Recommendations of the fits indexes have been

© Eseigboria Grace Paula Ijasan, 2018

made by Hair et al., (2010), Forza and Fillppini (1998), Greenspoon & Sarklofske and Awan (2012). The recommendations are presented in Table 5.18

Table 5.19: Fit Indexes recommended by Hair et al., (2010) and others

Test	Satisfactory Fit	Good Fit
χ^2 Value (CMIN) compared to the Independent model	χ^2 Value should be smaller than independent model χ^2	
χ^2 divided by df (CMIN/DF)	< 5.0	
P value	>0.05	
RMR	≤ 0.02	
GFI	>0.90	> 0.80
AGFI	>0.90	> 0.80
NFI	>0.90	> 0.80
CFI	>0.90	> 0.80
TLI	>0.90	> 0.80
RMSEA	< 0.05	< 0.08

5.4.5 Assessing the Overall Model Fitness of the OCAI, psychological Empowerment Scale and Social Perception Scale

The results following are the path diagrams and overview of model fit for each of the models for OCAI, psychological Empowerment and social perception.

5.4.5.1 Model Fitness for OCAI

In presenting the model fitness, the Path Diagram of the hypothesized model of the OCAI instrument is presented in Figure 5.1.

© Eseigboria Grace Paula Ijasan, 2018

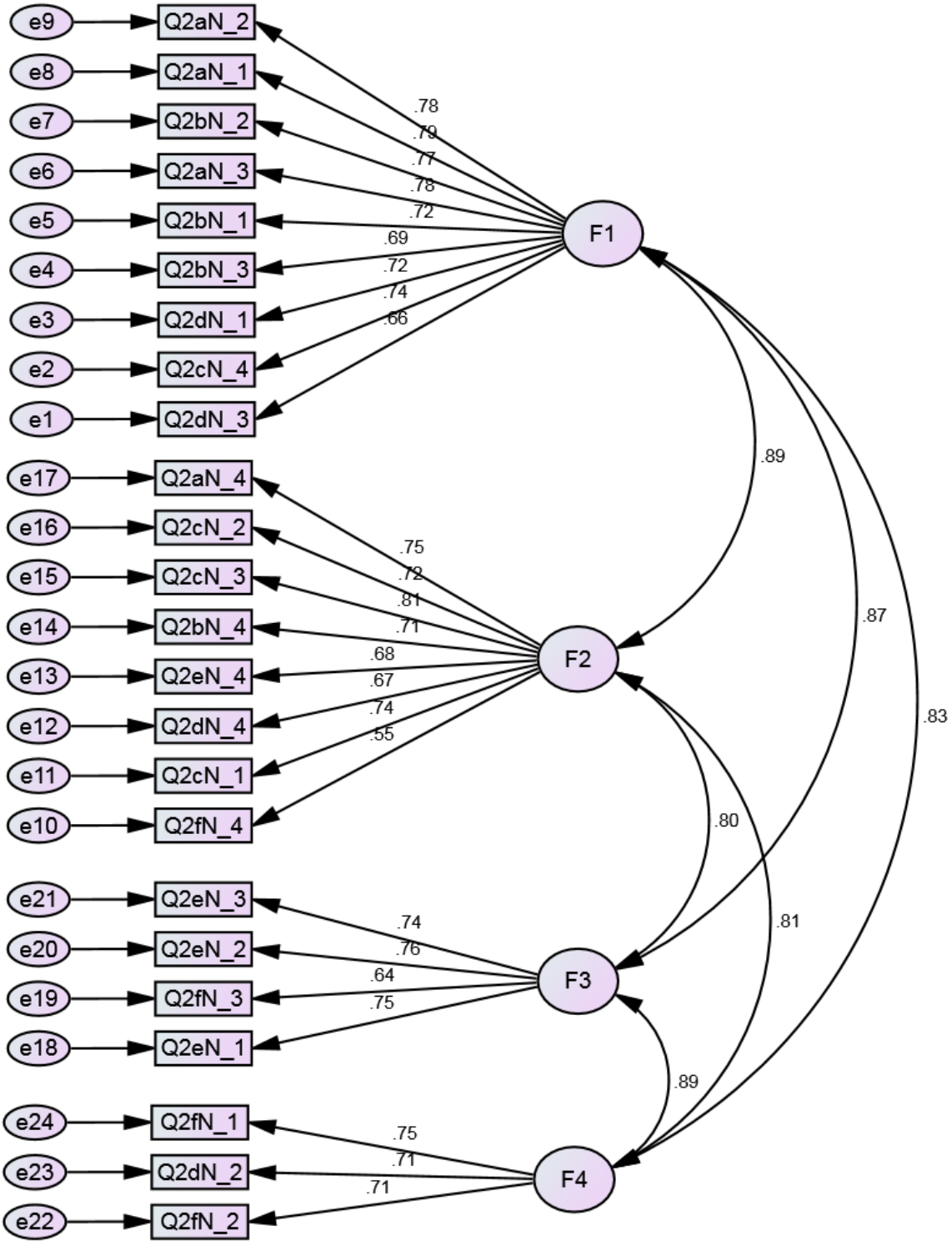

Figure 5.1: Path Diagram for the Four Factors of the OCAI Scale**.**
Source: Research data

Where F1 - represents Clan-focused Market culture, F2 - Hierarchy focused multi culture, F3 - Strategic Mixed Market culture and F4 Adhocracy focused culture.

© Eseigboria Grace Paula Ijasan, 2018

Figure 5.1 represents the hypothesized model for the OCAI. The CFA model comprise of four factors, with factor one comprising nine items, factor two comprise eight items, factor three has four items and factor four has three items, the items are influenced by random measurement errors. Each observed variable as seen in Figure 5.1 is regressed into its factor, and all factors are shown to be inter-correlated. Table 5.20 shows that the model has positive degree of freedom, 300 distinct pieces of information, 54 distinct parameters parameter to be estimated and leaving 246 degree of freedom. Thus, the model is said to be an over identified model. An over identified model is one in which the number of estimable parameters is less than the number of data points, thus resulting in a positive degree of freedom. The result also showed that minimum iteration was achieved. This is indicative of the fact that the observed variables produced a good result without the problem of multicollinearity. The chi squared value is large enough (579.627; $\rho = 0.000$).

Table 5.20: Summary Table for Notes for the Model

Test	Value
Number of distinct sample moments:	300
Number of distinct parameters to be estimated:	54
Degrees of freedom (300 - 54):	246
Chi-square	579.67
Degrees of freedom	246
Probability level = .000	0.000

Since the Chi squared test implies that the hypothesized data did not fit the model, other fit indexes were then examined to determine if the hypothesized data will not fail to be rejected (since chi squared test is biased towards large sample). The tests values that will be examined are CMIN/DF, RMR, GFI, AGFI, NFI, CFI, TLI and RMSEA. Table 5.21 shows the values as obtained in the CFA and the recommended values for fit to be established.

Table 5.21: Fit Indices for OCAI

Test	Recommended Value on Hair et al and others	Obtained Value
χ^2 Value (CMIN) compared to the Independent model	χ^2 Value should be smaller than independent model χ^2	579.67 (4086.83)
χ^2 divided by df (CMIN/DF)	< 5.0	2.37
P value	>0.05	0.000
RMR	≤ 0.02	0.076
GFI	>0.90 (satisfactory fit)	0.849

© Eseigboria Grace Paula Ijasan, 2018

	> 0.80 (suggest good fit)	
AGFI	>0.90 (satisfactory fit) > 0.80 (suggest good fit)	0.816
NFI	>0.90 (satisfactory fit) > 0.80 (suggest good fit)	0.858
CFI	>0.90 (satisfactory fit) > 0.80 (suggest good fit)	0.912
TLI	>0.90 (satisfactory fit) > 0.80 (suggest good fit)	0.902
RMSEA	< 0.05(good fit) < 0.08 (an acceptable fit)	0.071

The chi squared value is 579.67 as against the 4986.63 for the independence model, the CMIN/DF value is 2.36 which is in line with the recommended ≤ 5.0. the RMR value is 0.76 as against ≤ 0.02, the Goodness of Fit index of 0.85 ; AGFI is 0.82, Normal Fit Index (NFI) is 0.86; Comparative Fit Index (CFI) is 0.91 and it above the recommended 0.90; TLI is 0.90 and its just at the threshold of the recommended value. The RMSEA is 0.07 and it is a little bit above the 0.05. The values of the various fit indices, indicates that the Hypothesized Model is a good fit for the Observed Model. Hence the data is said to be an acceptable fFit for the Four Factor Model of the OCAI.

5.4.5.2: Model Fitness for Psychological Empowerment Scale

Path Diagram for the psychological empowerment scale was specified with items loading to their respective factors. The path is presented in Figure 5.2

© Eseigboria Grace Paula Ijasan, 2018

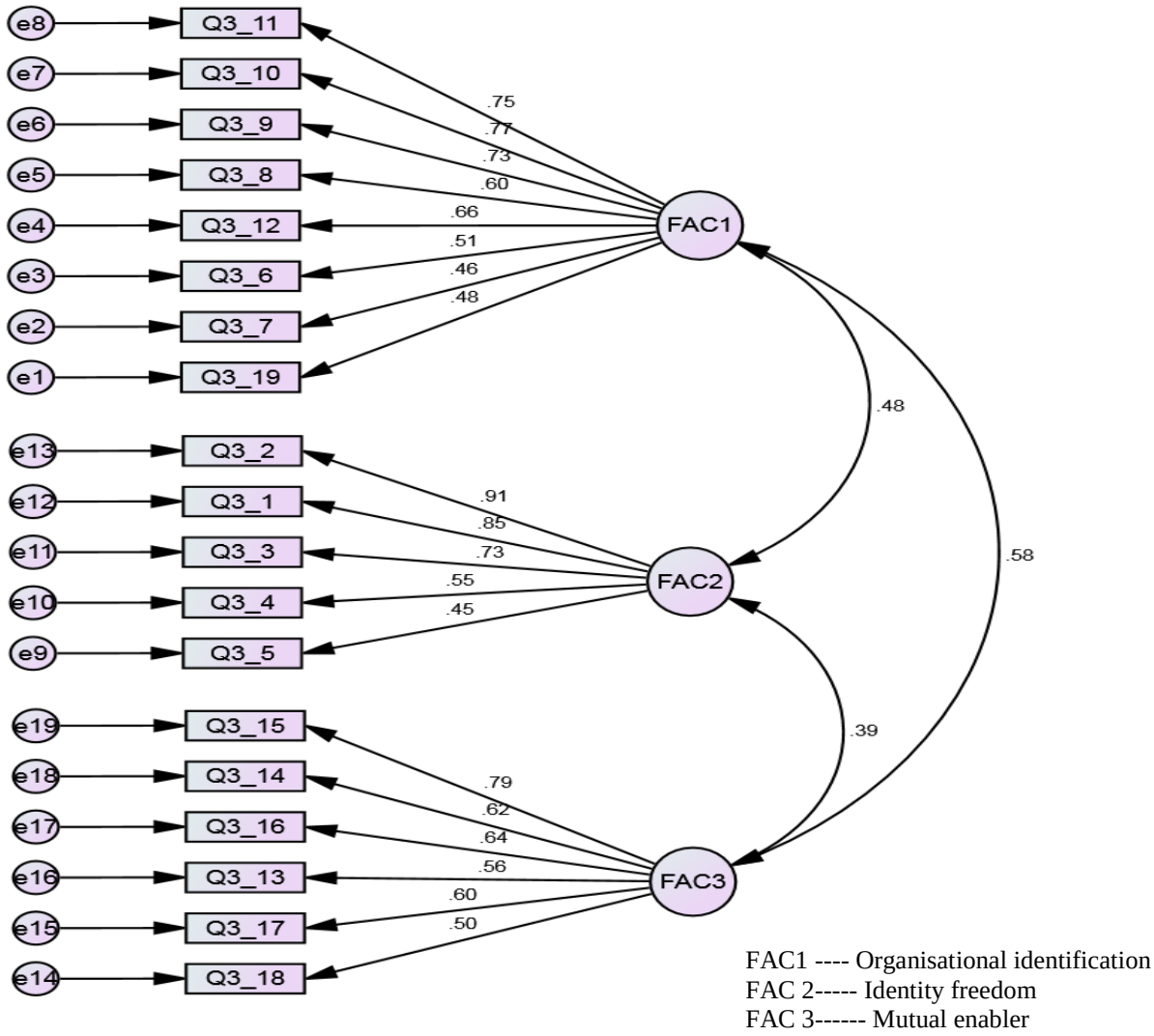

Figure 5.2: Path Diagram for the Psychological Empowerment Scale based on the Three Factors Extracted.
Source: Research data

The CFA model of psychological empowerment scale comprise of three factors with factor one having eight items, factor two has five items and factor three has six items. Each of these is influenced by random measurement errors, with each observed variable regressed to its factor. All factors are shown to be inter-correlated, but the correlations were not very high. The items were significantly regressed to their factors. The result of the CFA model fit indicates that minimum was achieved indicating no multicollinearity, it has a positive degree of freedom (149), it has 190 distinct sample moments with 41 distinct parameters to be estimated. The summary for the notes for the model is presented in table below.

© Eseigboria Grace Paula Ijasan, 2018

Table5.22: Summary of Parameters for the CFA model for Psychological empowerment

Test	Value
Number of distinct sample moments:	190
Number of distinct parameters to be estimated:	41
Degrees of freedom (300 - 54):	149
Chi-square	620.910
Probability level = .000	0.000

The table 5.22 shows that the Chi squared value is large and significant. Since this value is large, other fit indexes was then examined to determine model fitness. The result for the fit indices for the Psychological Empowerment Scale is presented in Table 5.23

Table 5.23: Fit Test for Psychological Empowerment

Test	Recommended Value	Obtained Value
χ^2 Value (CMIN) compared to the Independent model	χ^2 Value should be smaller than independent model χ^2	620.91 (2307.79)
χ^2 divided by df (CMIN/DF)	< 5.0	4.17
χ^2 sig value	>0.05	0.00
RMR	≤ 0.02	0.08
GFI	>0.90 (satisfactory fit) > 0.80 (suggest good fit)	0.79
AGFI	>0.90 (satisfactory fit) > 0.80 (suggest good fit)	0.74
NFI	>0.90 (satisfactory fit) > 0.80 (suggest good fit)	0.73
CFI	>0.90 (satisfactory fit) > 0.80 (suggest good fit)	0.78
TLI	>0.90 (satisfactory fit) > 0.80 (suggest good fit)	0.75
RMSEA	< 0.05(good fit) < 0.08 (acceptable fit)	0.11

From the table, it is seen that the obtained chi-squared value in the model is lower than the independent chi-square value of the independent model, but it is significant as against the recommended. The RMR is above the recommended value of 0.02, the GFI, AGFI, NFI, CFI, and TLI values are all below the recommended values for a good fit as well as that for a satisfactory fit. The RMSEA value is above also. Based on the result of the fit model, it is seen that the theorized model did not fit the data. But some modification was done based on the recommendations from the modification indices produced by AMOS 24. The modification

© Eseigboria Grace Paula Ijasan, 2018

indices suggested a path should be drawn from Factor one to item three and five to improve the model fitness. The Path Diagram of the modified model is presented Figure 5.3

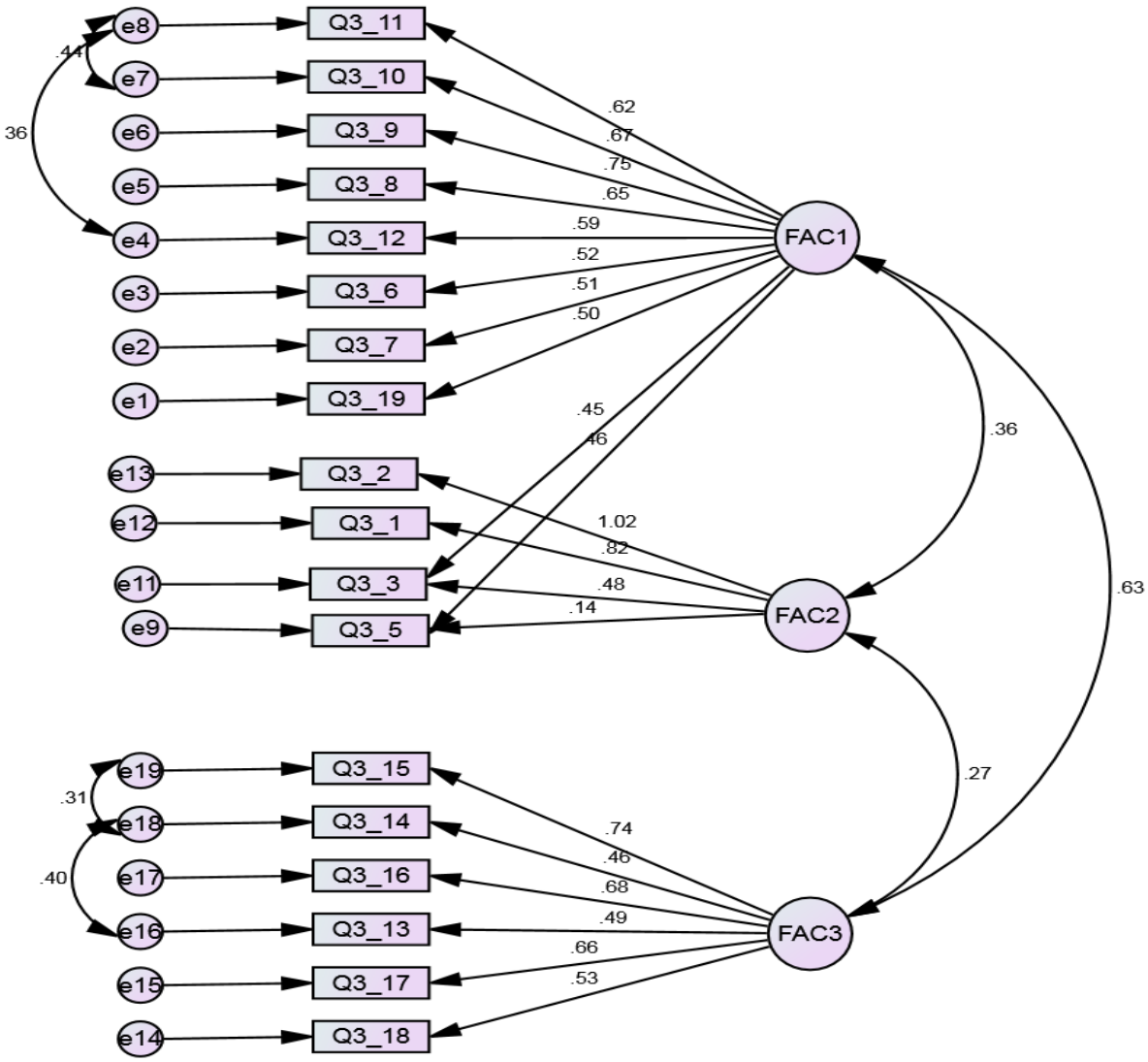

Figure 5.3: Path Diagram for the Modified model of the CFA for psychological Empowerment.
Source: Research data

Based on the recommendations of Modification Indices, a path was drawn from factor one to items three and five as recommended, (this path drawn is indicative of the fact that question three and five shares variances with that factor. Also recommended covariance arrows were

© Eseigboria Grace Paula Ijasan, 2018

drawn between errors. This covariance drawn indicates a relationship between the errors. Covariance arrow was drawn between error 16 & 18, error 18 & 19 in factor two, also as recommended, a relationship was drawn between error four & eight and error seven & eight. After the modifications were done, the CFA test indices were recomputed. The result is presented below

Table 5.24: Summary of Parameters for the Modified CFA model for Psychological empowerment

Test	Value
Number of distinct sample moments:	171
Number of distinct parameters to be estimated:	45
Degrees of freedom (171 – 45)	126
Chi-square	270.71
Probability level (sig)	0.00

Table 5.24 shows that the distinct sample moment to be evaluated after the modification is 171, 45 distinct parameters to be estimated, giving a Degree of Freedom value of 126. The Chi-squared value is 270 and it is significant. Since this value is large, we go ahead and examine another fit parameter.

Table 5.25: Model Fit Indices for the Modified CFA model for Psychological empowerment.

Test	Recommended Value	Obtained Value
χ^2 Value (CMIN) compared to the Independent model	χ^2 Value should be smaller than independent model χ^2	270.71 (2117.00)
χ^2 divided by df (CMIN/DF)	< 5.0	2.15
χ^2	>0.05	0.00
RMR	≤ 0.02	0.05
GFI	>0.90 (satisfactory fit) > 0.80 (suggest good fit)	0.91
AGFI	>0.90 (satisfactory fit) > 0.80 (suggest good fit)	0.87
NFI	>0.90 (satisfactory fit) > 0.80 (suggest good fit)	0.87
CFI	>0.90 (satisfactory fit) > 0.80 (suggest good fit)	0.93
TLI	>0.90 (satisfactory fit) > 0.80 (suggest good fit)	0.91
RMSEA	< 0.05(good fit) < 0.08 (acceptable fit)	0.07

The chi squared value is 270.71 against the 2117.00 for the independence model; the CMIN/DF value is 2.15 which is less than the recommended ≤ 5.0. the RMR value is 0.05, the Goodness

© Eseigboria Grace Paula Ijasan, 2018

of Fit index (GFI) is 0.91 which is satisfactory; AGFI is 0.87 which is in the acceptable range, Normal Fit Index (NFI) is 0.87; Comparative Fit Index (CFI) is 0.93 and it above the recommended 0.90; TLI is 0.91 and its just at the threshold of the recommended value. The RMSEA is 0.07 is also an acceptable fit. From the result, it will be concluded that the Model has a good fit and therefore fails to be rejected.

5.4.5.3: Model Fitness for Social Perception Scale

The Path diagram for the model is presented in Figure 5.4

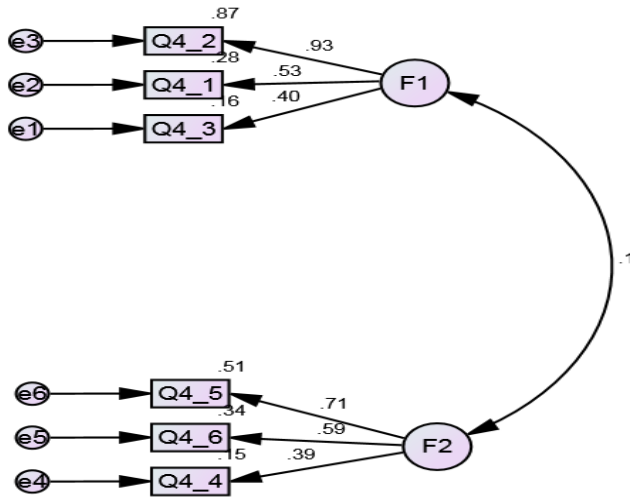

F1- Inclusiveness
F2- Equal treatment

Figure 5.4: Path Diagram for the social perception Scale
Source: Research data

The CFA model for the social perception scale comprised of two factors with three items each. Each observed variable is regressed into its factor. Table 5 shows that the model has positive degree of freedom, 21 distinct pieces of information (sample moment), 13 distinct parameters parameter to be estimated and leaving eight degrees of freedom. Thus, the model is said to be an over identified model. The result also showed that minimum (iteration) was achieved which is indicative that the observed variables produced and good result without the problem of multicollinearity. The chi squared value is quite large (54.18; $\rho = 0.000$).

© Eseigboria Grace Paula Ijasan, 2018

Table 5.25: Note summary for the model fit Test for social perception.

Test	Value
Number of distinct sample moments:	21
Number of distinct parameters to be estimated:	13
Degrees of freedom (21-13):	8
Chi-square	54.18
Probability level = .000	0.000

Since the Chi squared test implies that the hypothesized data did not fit the model, other fit indices will be accessed to determine if the hypothesized data will not fail to be rejected. (Since chi squared test is biased towards large sample). Table 5.26 shows the values as obtained in the CFA and the recommended values for fit to be established.

Table 5.26: Model Fit Indices for social perception Scale

Test	Recommended Value	Obtained Value
χ^2 Value (CMIN) compared to the Independent model	χ^2 Value should be smaller than independent model χ^2	54.18 (248.55)
χ^2 divided by df (CMIN/DF)	< 5.0	6.77
χ^2	>0.05	0.00
RMR	≤ 0.02	0.12
GFI	>0.90 (satisfactory fit) > 0.80 (suggest good fit)	0.94
AGFI	>0.90 (satisfactory fit) > 0.80 (suggest good fit)	0.85
NFI	>0.90 (satisfactory fit) > 0.80 (suggest good fit)	0.78
CFI	>0.90 (satisfactory fit) > 0.80 (suggest good fit)	0.80
TLI	>0.90 (satisfactory fit) > 0.80 (suggest good fit)	0.62
RMSEA	< 0.05(good fit) < 0.08 (acceptable fit)	0.15

The chi squared value is 54.18 and its less than the value (248.55) for the independence model, the CMIN/DF value is 6.77 which is above the recommended ≤ 5.0. the RMR value is 0.12 as against ≤ 0.02, the Goodness of Fit index of 0.94 is higher than the recommended 0.90; AGFI is 0.85, Normal Fit Index (NFI) is 0.78; Comparative Fit Index (CFI) is 0.80 which is less than the recommended 0.90; TLI is 0.62 which is less than the recommended value. The RMSEA is 0.07 and it is a little bit above the 0.05. From the result, it will be concluded that the Model fit is not an acceptable one. But some of the modification were done based on the recommendations from the modification indices produced by AMOS 24.

© Eseigboria Grace Paula Ijasan, 2018

The Path Diagram of the modified model of the social perception of BBBEE is presented below.

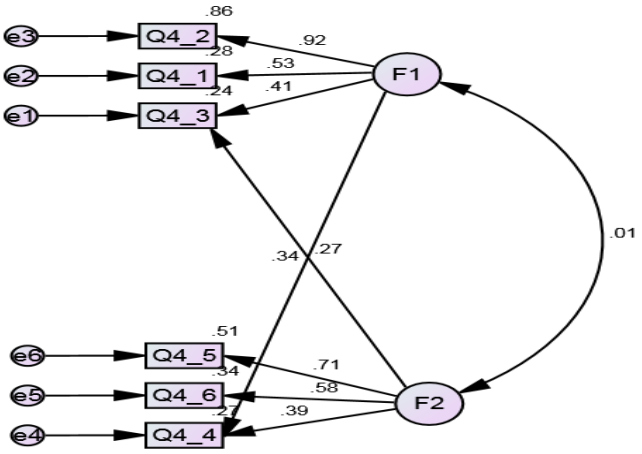

Figure 5.5: Modified Path Diagram for social perception
Source: Research data.

Based on the recommendation of analysis in AMOS (modification indices) a path was drawn from factor one to item four and from factor two to item three. After the recommended paths were drawn, the test was re-run and minimum was achieved. The result of the modified test is presented in Table 5.27.

Table 5.27: Summary of Parameters for the Modified CFA model for social perception

Test	Value
Number of distinct sample moments:	21
Number of distinct parameters to be estimated:	15
Degrees of freedom (21- 15):	6
Chi-square	10.21
Probability level = .000	0.12

Table 5.27 shows that the number of distinct sample moment is 21, with 15 distinct parameters to be estimated making the degree of freedom to be six. The chi-square value is low which is very good and the probability level is not significant. This makes the data a good fit for the model. Considering other fit indices, we see that they are pointing to the fact that the model has a satisfactory fit.

© Eseigboria Grace Paula Ijasan, 2018

Table 5.28: Model Fit for the Modified CFA model for social perception

Test	Recommended Value	Obtained Value
χ^2 Value (CMIN) compared to the Independent model	χ^2 Value should be smaller than independent model χ^2	10.21 (248.55)
χ^2 divided by df (CMIN/DF)	< 5.0	1.70
χ^2 sig value	>0.05	0.12
RMR	≤ 0.02	0.04
GFI	>0.90 (satisfactory fit) > 0.80 (suggest good fit)	0.99
AGFI	>0.90 (satisfactory fit) > 0.80 (suggest good fit)	0.96
NFI	>0.90 (satisfactory fit) > 0.80 (suggest good fit)	0.96
CFI	>0.90 (satisfactory fit) > 0.80 (suggest good fit)	0.98
TLI	>0.90 (satisfactory fit) > 0.80 (suggest good fit)	0.96
RMSEA	< 0.05(good fit) < 0.08 (acceptable fit)	0.05

The chi squared value is 10.21; the CMIN/DF value is 1.70 which is less than the recommended ≤ 5.0. the RMR value is 0.04 as against ≤ 0.02, the Goodness of Fit index of 0.99 is higher than the recommended 0.90; AGFI is 096 which is a very good one, Normal Fit Index (NFI) is 0.96; Comparative Fit Index (CFI) is 0.98 and it above the recommended 0.90; TLI is 0.96 and it is above the recommended value. The RMSEA is 0.05. From the result, it will be concluded that the Model fit is satisfactory.

Since a good fit has been obtained for all the models, the next phase is to answer the research hypotheses using structural equation Modeling.

5.5 Interpretation of the Structural Equation Modeling Results

The data gotten from the study was empirically validated using Structural Equation Modeling. The Structural Equation Model was used to test the three hypotheses. SPSS AMOS 24 was the software used for the analysis. Multiple regression was also used to test the influence of the demographic variables on the social perception of BBBEE. The following section explains briefly the basic concept of Structural Equation modelling and Confirmatory Factor Analysis.

© Eseigboria Grace Paula Ijasan, 2018

Structural Equation Modeling

Structural Equation Modeling is a combination of multiple regression and factor analysis, it is a confirmatory technique, but can be used for exploratory purpose. It is an extension of Confirmatory Factor Analysis, in that it includes the dependent variable(s) to test for relationships. SEM can be seen as a series of tests which conveys that the causal processes of the study (diversity) are represented by a series of equations in a pictorial way. The SEM tests the hypothesized model of the entire system of variables in a simultaneous analysis. It uses the Goodness-of-fit adequacy to argue for the plausibility of the postulated relationships among the variables (Tanbachnick and Fidell, 2007). Some terms used in SEM

Exogenous Latent Variables: This is also known as independent variables, they are otherwise known as the predictors in regression.

Endogenous Latent Variables: Endogenous latent variables are also known as dependent variables and are influenced by the exogenous variable. This influence could be direct or indirect.

Assumptions of Structural Equation Models

1. All level of measurements which are nominal, ordinal, interval and ratio scales can be used in the analysis.
2. Correlation or variance – covariance data matrix derived from the set of observed variables can be used.
3. Large sample size is normally required.
4. Data should be normally distributed.

The null hypothesis to be tested here are

1. The culture of an organisation does not significantly influence the social perception of BBBEE of the respondents

2. The psychological empowerment of the respondents does not significantly influence the social perception of BBBEE

3. The culture of an organisation does not significantly influence the psychological empowerment of the respondents.

In testing the hypotheses, certain symbols are used in path diagrams to denote hypothesized processes involving the entire system of variables. In particular, one-way arrows represent structural regression coefficients and thus indicate the impact of one variable on another. In figure 6, for example, the unidirectional arrow pointing toward the endogenous factor diversity implies that the exogenous factor OCAI has an impact in the cause social perception. Likewise,

© Eseigboria Grace Paula Ijasan, 2018

the four unidirectional arrows leading to each of the four-observed variable for OCAI and three variables for psychological empowerment suggest that these score values are each influenced by their respective underlying factors. As such these path coefficients represent the magnitude of expected change in the observed variables for every change in the related latent variable (or factor). The one-way arrows pointing from the enclosed error terms (e1 – e12) indicate the impact of measurement error on the observed variables.

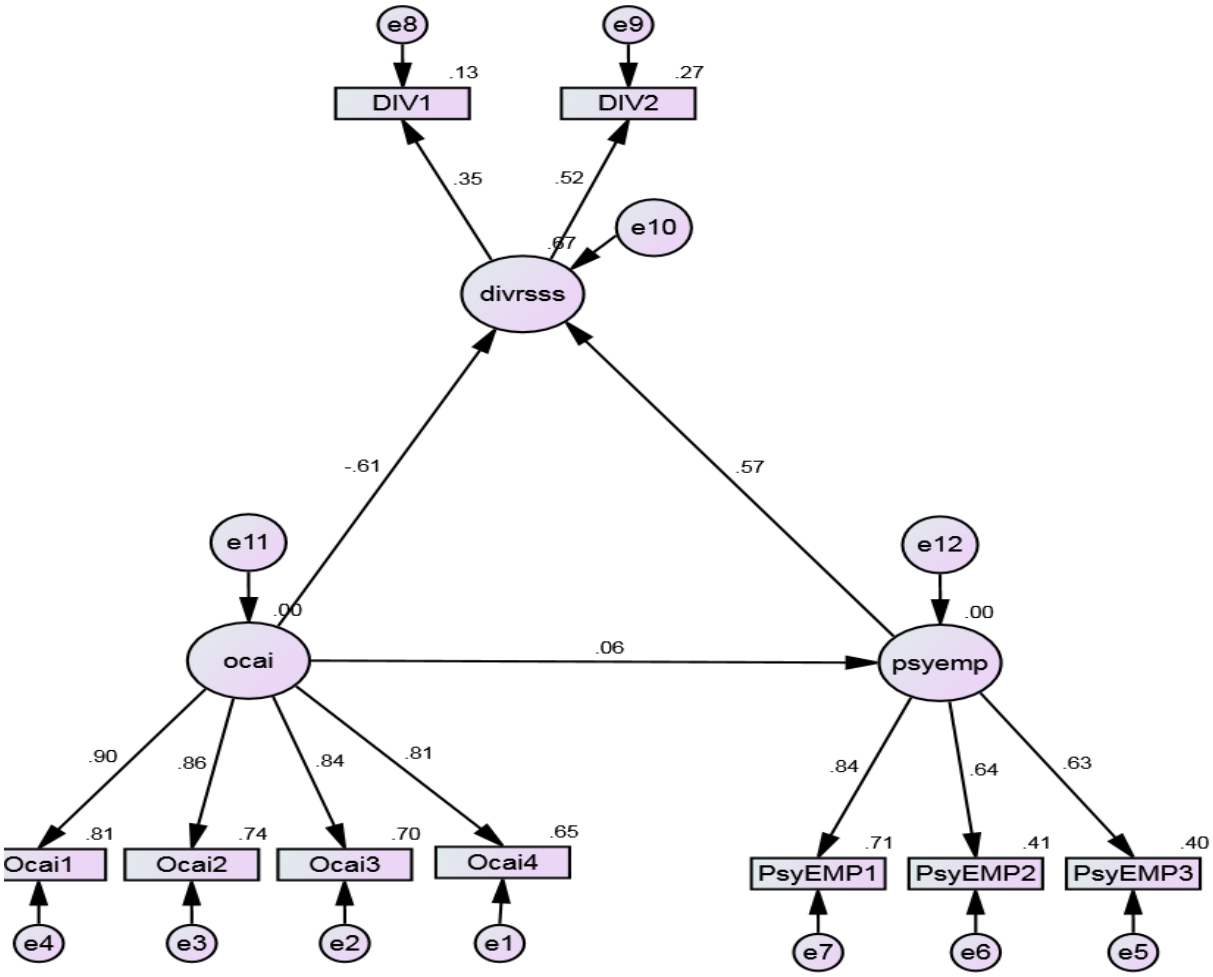

Figure 5.7: SEM for the relationships between the independent and dependent variables.
Source: Research data

The SEM was conducted using SPSS AMOS 24 to the hypotheses. In assessing the Structural Model Fit, criteria as that of the confirmatory Factor Analysis was used, except that chi squared goodness of fit for CFA is always less than Chi square goodness of fit for SEM. The summary of the model is presented in the table below

© Eseigboria Grace Paula Ijasan, 2018

Table 5.29: Fit Indices Test for SEM

Test	Obtained Value
χ^2 Value (CMIN) compared to the Independent model	96.178
χ^2 divided by df (CMIN/DF)	4.01
χ^2 sig Value	0.00
RMR	1.42
GFI	0.93
AGFI	0.87
NFI	0.91
CFI	0.93
TLI	0.90
RMSEA	0.11

Except for RMR (1.42) and RMSEA (0.11), the model represents a reasonable model fit for the structural model. GFI obtained is 0.92, AGFI value is 0.87, NFI value is 0.91, CFI value is 0.93, TLI value obtained is 0.90. Hence it is concluded that the proposed research model fit the data reasonably. In testing the structural relationships, the hypothesized model showed a good fit as two out of the three paths are significant.

Table: 5.30: Hypotheses Testing and Path Coefficient Values

Hypothesis Number	Null Hypothesis Statement	Path Coefficient (β Value	P- Value	Remark
1	The implementation of the BBEE Act as seen the culture of an organisation) does not significant influence the social perception of the workplace diversity of the respondents	-0.61	0.00	Significant (Supported)
2	The psychological empowerment of the respondents does not significantly influence social perception of BBBEE	0.58	0.00	Significant (Supported)
3	The organisational culture does not significantly influence the psychological empowerment	0.06	0.43	Not Significant (Not Supported)

Two of the null hypotheses tests were significant, hypothesis one was significant. This is indicative that the social perception of BBBEE is influenced by organisational culture (β = -0.61). The Beta Value of -0.61 indicates that for every one standard deviation increase in the organisational culture, the social perception of BBBEE will reduce by 0.61 unit's standard

© Eseigboria Grace Paula Ijasan, 2018

deviation. The psychological empowerment has a beta value of 0.58, indicating that for every one-unit standard deviation change in the psychological empowerment of the employees, the social perception of BBBEE will increase by 0.58 units' standard deviation. The result for the third hypothesis was not significant. This means that the organisational culture has no influence on the psychological empowerment of employees in South Africa.

5.6 Influence of Respondents general profile on Fostering Diversity

To test the influence of the respondents general on fostering Diversity, a multiple regression analysis was conducted. The result is presented in Table 5.31

Table 5.31: Regression Analysis of relationship between Demographic Variables and Workplace Diversity

Source	SS	df	Ms	F	r	r^2	Std. error	P
Regression	184.445	5	36.889	2.378	0.208	0.043	3.938	0.039
Residual	4095.022	264	15.511					
Total	4279.467	269						

Table 5.31 shows that demographic variables are significant predictors of workplace diversity [F (5, 264) = 2.378; $\rho < 0.05$]. The Pearson correlation value of the relationship between demographic variable and workplace diversity is 0.208. This r value shows that the relationship between the demographic variables (respondents' general profile) and workplace diversity is weak. The r squared value of 0.043 indicates that the demographic variables of the respondents influence their workplace diversity by just 4.3% (i.e. 0.043 * 100) indicating a very low influence. Based on the significance of the result the null hypothesis therefore fails to be accepted.

In order to determine the level at which these variables significantly predicted workplace diversity, the Beta value was computed. The result is presented in Table 5.32.

Table 5.32: predictive coefficient of Demographic variables on workplace Diversity

	Unstandardized Coefficients		Standardized Coefficients	Sig.
	B	Std. Error	Beta	
(Constant)	30.784	1.352		.000
Years of relevant work experience	.776	1.514	.123	.609
Number of years in current company	.201	1.500	.032	.894
Gender	-1.051	.483	-.132	.031
Race	-.045	.266	-.010	.867
Sector that applies to your company	-.157	.297	-.032	.596

© Eseigboria Grace Paula Ijasan, 2018

The result in Table 5.32 shows that years of relevant work experience is not a significant predictor of workplace diversity ($\beta = 0.123$, $\rho > 0.05$). Also, number of years in current company was not a significant predictor of workplace diversity ($\beta = 0.032$, $\rho > 0.05$). Race ($\beta = -0.010$, $\rho > 0.05$) and company sector ($\beta = - 0.032$, $\rho > 0.05$) are not significant predictors of workplace diversity. Only Gender significantly predicted workplace diversity (($\beta = 0.132$, $\rho < 0.05$). The Beta Value indicates that for every one standard deviation change in the Gender of the respondents, workplace diversity will reduce by 0.132units.

5.7 Comparing the Ideal and Current Culture of the Respondents

In determining the culture type that exists in the companies sampled, the scores of the respondents were graphed using the OCAI excel sheet for plotting the culture graph. The graphs were based on the various company sectors. A graph is expected to slope pointed to a particular culture type for it to belong to that culture group. The slope is indicative that respondents had the highest score in that culture type it is sloped to. In the Graphs, the red line indicates the current culture that is being practiced, while the Broken Blue line represents the Ideal Culture.

Figure 5.8 represents the culture practiced by the companies sampled in the study. It shows that the companies practiced a mixed culture type. (i.e. all the culture types are found within the companies that were assessed. Although, a critical look at the red line shows that the current culture type tends to slope towards the Hierarchy Culture type, while the ideal culture is a little bit sloped to Adhocracy culture type.

© Eseigboria Grace Paula Ijasan, 2018

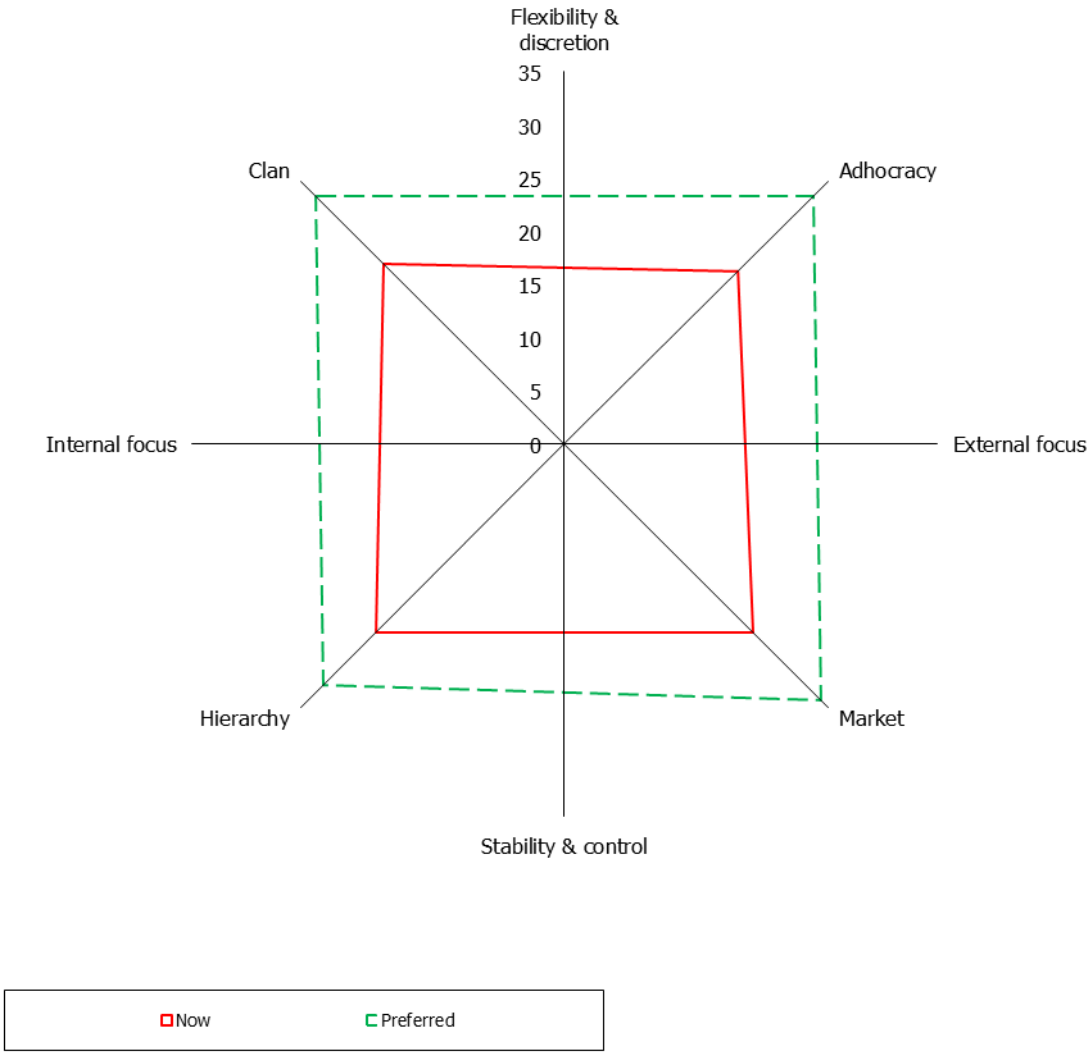

Figure 5.8: Plot of Culture Practiced by Companies in South Africa
Source: Research data

For the insurance companies, there is a practice of all the culture types, but from the graph, the current culture sloped a little bit to hierarchy while the ideal culture is sloped towards market. Figure 5.9 shows the culture plot for bank, the ideal culture is market, while the current culture is sloped to adhocracy. In figure 5.10, the current culture practiced by financial services companies is more of Hhierarchy, although other cultures types are practiced. the ideal culture is market

© Eseigboria Grace Paula Ijasan, 2018

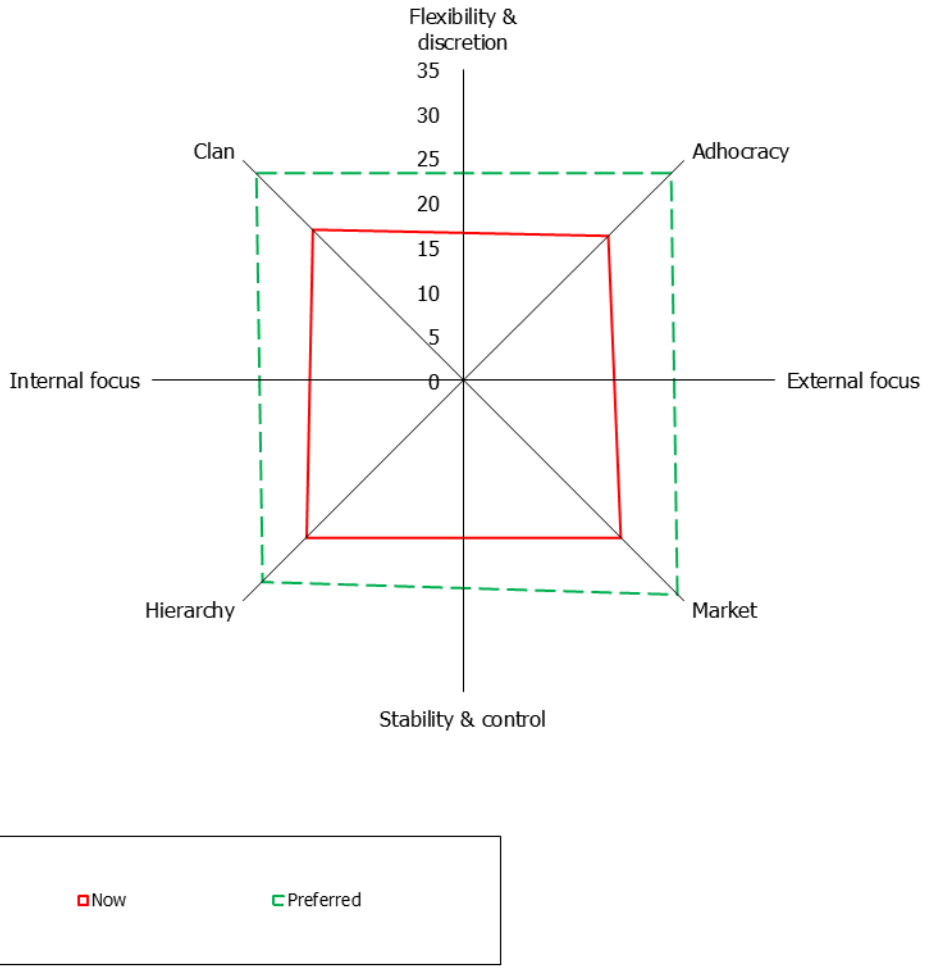

Figure 5.9a: Culture plot for Insurance Companies
Source: Research data

© Eseigboria Grace Paula Ijasan, 2018

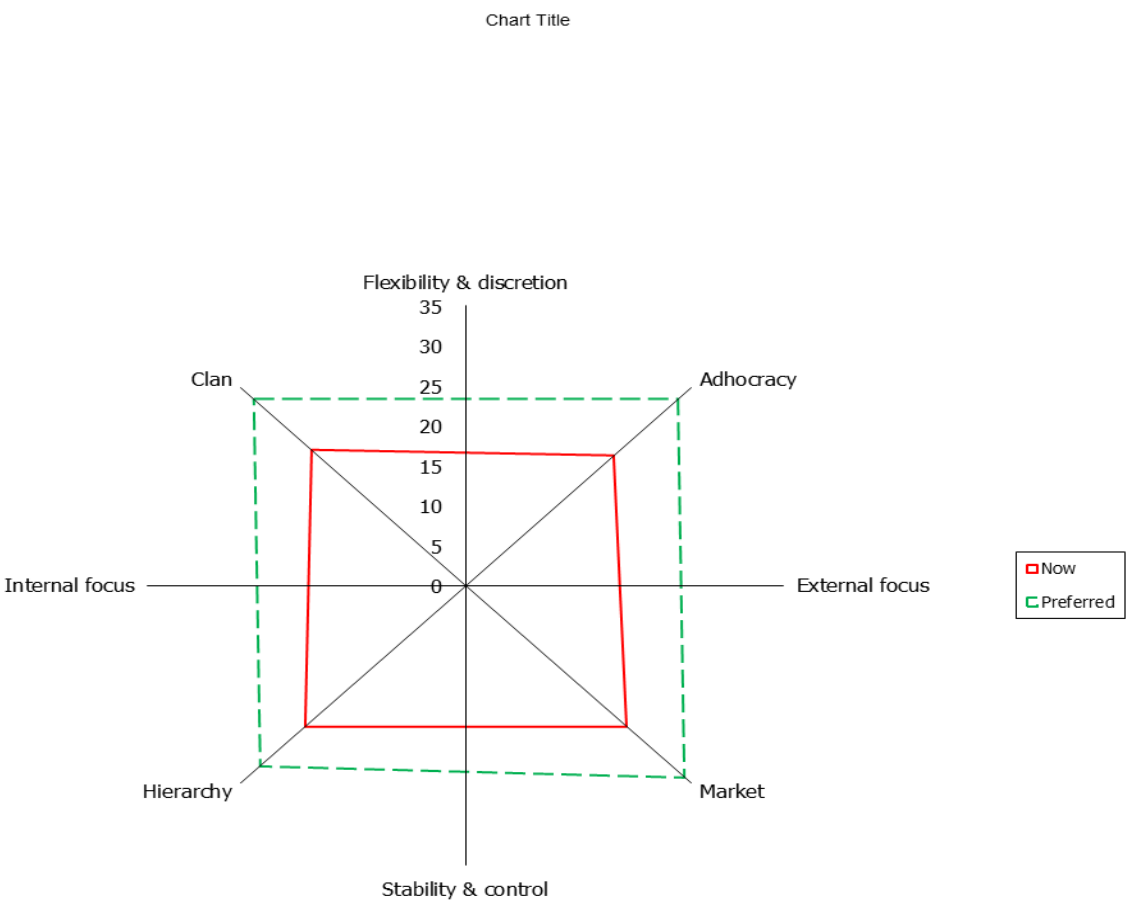

Figure 5.9b: Culture plot for Banks
Source: Research data

© Eseigboria Grace Paula Ijasan, 2018

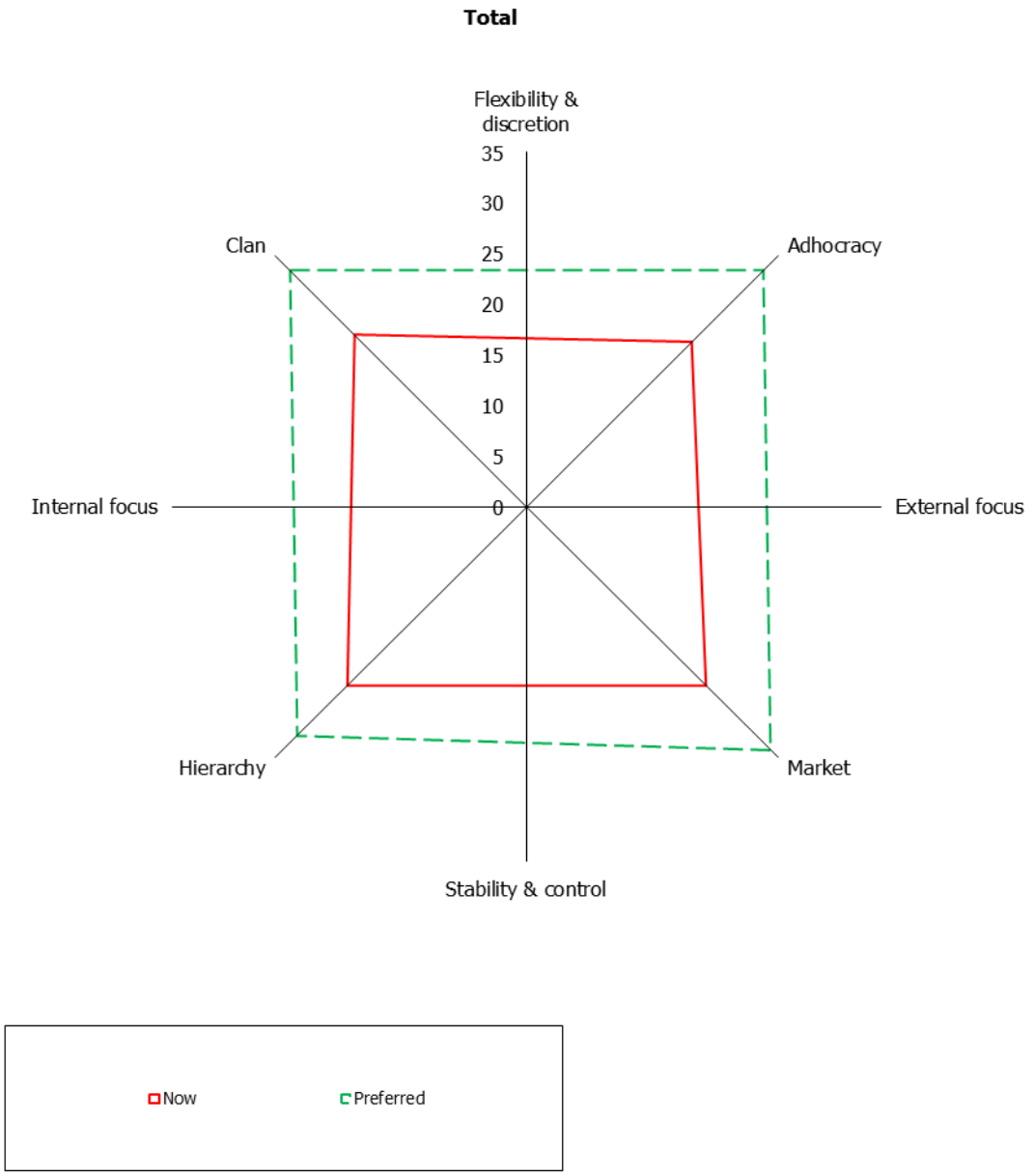

Figure 5.10: Culture type practiced by Financial Services Companies.
Source: Research data

It therefore means that since there is currently no obvious dominant culture practised by the companies in the three sectors but there is a preferred culture by the employees of these companies. Based on the data analysed Market culture type is the preferred by all which is significant because all three sectors are similar.

© Eseigboria Grace Paula Ijasan, 2018

5.8 Chapter Summary and Conclusion

This chapter presented the results obtained from the study. The results presented are the general profile of the respondents, exploratory factor analysis, confirmatory factor analysis, and Structural Equation Modelling as well as regression analysis of the data obtained for the study. The results obtained showed that in the exploratory factor analysis of the OCAI, four factors were extracted, but the variables in each factor were not the same as that of Cameron and Quinn. The result also revealed that three components/factors were extracted in psychological empowerment scale, while two factors were extracted in the social perception scale. In confirming the factors extracted, the confirmatory factor analysis was conducted. The results presented in this chapter shows that the models fit the data that was obtained. Structural equation modelling was used to test the null hypotheses developed for the study. The result revealed that the culture of an organisation is a significant negative predictor the social perception of the workplace diversity of the respondents. The psychological empowerment of the respondents is a significant predictor of workplace diversity; and the culture does not significantly influence the psychological empowerment of the respondents. Based on the result obtained from the multiple regression analysis between the demographics variables of the respondents and workplace diversity, only gender significantly predicted workplace diversity. In comparing the Current and Ideal culture of the companies in South Africa, the result revealed that the financial institutions in South Africa practices a mix of all the culture types.

© Eseigboria Grace Paula Ijasan, 2018

CHAPTER 6 Conclusion and Recommendation

6.1 Introduction

BBBEE was presented as a golden buzzer that was meant to take all the problems and challenges of workplace inequality away. It was presented as a tool that will send the pitiful history of apartheid South Africa in the abyss of oblivion at least as far as workplace similitude. The core hope of the proponents of the BBBEE act was that it will give more practical representation to blacks and the previously disadvantaged individuals in South Africa, However, over the years, there has been a split opinion on whether this initiative does anything to improve the lot of the people it was meant to help. Some researchers opined that the act only gives more physical/demographic representation but that the number increase does not amount to much for the people. They argue that if anything, the BBBEE does not foster diversity and that the workplace in SA is more fragmented. To this light, this research set out to review the extent to which BBBEE fosters diversity.

This concluding chapter presents the thematic discussion of the findings as they relate to the research objectives. As the principal goal of the research was to evaluate the effectiveness of the BBBEE in fostering diversity, various objectives were set out to assist the quest. One key theory that has been closely followed was the Competitive Value Framework (CVS). This is a widely accepted theory which many authors have adopted and adapted in their research. The central tenet of this theory is that it uses the measurement tool Organizational Culture Assessment Instrument OCAI to measure the dominant culture in organisation. The CVS theory was evaluated extensively in chapter two, its strengths were leveraged upon, but it was seen that since the aim of this work is beyond mere measurement of organisational culture of companies, two other theories were studied. These were the Self Categorisation Theory and Social Identity Theory. A measurement instrument was developed from a combination of these three theories and the previous chapter presented the findings.

This chapter among others presents the research objectives; discusses the implications of the research in relation to the objectives, discusses the overall implications of the problem statement, thereby shedding light on the limitation of the study as well as future opportunity for research in this field. This is done thematically. The section headings are the research objectives as proposed in chapter one. This is done to assist the reader in following the drift of the presentation and to express how well the research has met its objectives. The research was

© Eseigboria Grace Paula Ijasan, 2018

not without its own limitations; as a time bound academic exercise, the research was constricted by many factors, these factors are discussed, the implications of the research findings for policy in SA are presented and finally, the chapter tries to put all the pieces together in the conclusion.

6.2 Summary of Findings

In as much as diversity management, affirmative action and employment equity have been widely researched in the field of human resource management, 'fostering diversity' is novel. In this research, the concept was, for the first time, being linked to the implementation of the Broad Based Black Economic Empowerment Act. This study looked at three main areas which are keys to the determination of the level of fostering diversity. It looked at the influence of organisational culture, psychological empowerment and the social perceptions of the employees to the implementation of the Act. It is important to reiterate here that the BBBEE Act is a current topic of interest in South Africa. For investors, it might be a deal breaker whether to invest or not as this might challenge their organisational culture and possible structure too. But where the fabric of the organisational culture is imbedded with an atmosphere that fosters diversity, then compliance and commitment will be achieved. For the employee, it is a struggle to convince oneself that they are not a statistic in their organisation but rather a valued employee based on merit or competence. The summary of the research findings narrates the concept of fostering diversity within some of the top performing BEE companies from which the data was obtained. In order to maintain the structure introduced in chapter one, the research findings in sections 6.2.1 through 6.2.4. are presented according to the research objectives and questions outlined in sections 1.3 and 1.4 respectively.

6.2.1 Evaluation of the Current Understanding of BBBEE Act

The geographical context of this research is South Africa; however, to have a more holistic view of the research area, this study looked at literature from the international perspective. Even though the reviewed countries do not essentially have similar history as South Africa, the central ideology of similar initiatives to the BBBEE act is comparable in most context. The three main areas covered by the review of extant literature were: works on diversity management within and outside of the South African context, studies on African management and finally literature on the Broad Based Black Economic Empowerment Act. Findings from the reviewed literature revealed that there is a general understanding of the purpose of the Broad Based Black Economic Empowerment Act which are, 'to depolarise the economic strength equally among all South Africans', to give employment opportunity to the

© Eseigboria Grace Paula Ijasan, 2018

marginalised sect, improve the living standard of the previously disadvantaged by empowering them directly and indirectly to have a stake in the growth of the organisation they belong to and the country. However, when it came to opinions on the actual implementation of the Act in relation to fostering diversity, this varied from one author to the other. The literature revealed that the implementation process of the Act was considered flawed in that it is focused mainly on 'ticking the box' of the requirements to obtain a high BEE score. This is okay if the goal is only to achieve the economic empowerment of previously disadvantaged South Africans and to satisfy political correctness of being a transformational instrument for promoting workplace diversity. However, this research discovered that the latent dimensions of diversity remain a great challenge in diversity management. These dimensions include identity freedom, individuation, emotional recognition, esteem, dignity, organisational identification, humaneness, inclusiveness, equal treatment and so much more. The picture here is that, there is a strong compliance to the BBBEE Act. Companies have well represented diversified workforce, employees are offered equity in their organisations. Therefore, companies have good BEE rating. Yet, employees still complain about issues of discrimination and unfair treatment. This corroborates the position of Horwitz and Jain (2011), that legislative or institutional regimes may reflect a "carrot and sticks" outcomes compliance rather than commitment approach.

6.2.2 Measuring the Level of Fostering Diversity

To achieve this objective, data was obtained from literature and the main study. From the key literature, elements that fosters diversity were grouped into three different areas, organisational culture, psychological empowerment and the social perception of diversity. All three elements formed the basis for the development of the fostering diversity index (FDI). See appendix 1.
To assess the organisational culture, OCAI was adapted to the fostering diversity instrument. The research looked at both the current and preferred organisational culture type that exist within the selected companies. The aim of assessing the culture type was to determine if the organisations have an atmosphere that promotes diversity. This supports the position of Arrendodo (1996), Ely and Thomas (2001) and Podsiadlowski et al., (2013) on the perceptions of diversity. From the analysis of the current culture assessment, it was found that all the companies practiced a mixed culture that geared slightly to the hierarchy culture type. A quick recap on the hierarchy culture describes it as one that is governed by procedures. Its value drive is consistency, uniformity and efficiency. Its work environment is known for sound structure

© Eseigboria Grace Paula Ijasan, 2018

and its theory for effectiveness is based on appropriate procedures to promote efficiency and control. Employees in these organisations can be sure of secured employment since there is a predictability of career development and promotions. This type of culture places itself first before the employees. The focus is on distinguishing itself by its quality of product or services. Employees follow strict procedures and lived experience is not a priority. There is a clear line of authority and communication which in a way unifies the organisation. Implementation of BBBEE in an organisation practicing the hierarchy culture type will create a feeling of invisibility on the part of the employee. Employees need to be given opportunity to share ideas, be innovative and creative. However, this is difficult in an organisation that has strict adherence to spelt out procedures. Employees find themselves unable to distinguish if their progression is based on their competence or a mere compliance to the BBBEE regulation. They tend to work extra hard to prove their competence and gain organisational identification.

To assess the level of psychological empowerment in each organisation, structured questions were designed to capture the elements of diversity as proposed by Maier, (2005) Chrobot-Mason & Aramovich (2013) Cox (1999) and Pless & Maak (2004). The elements include individuation, uniqueness, inclusiveness, equal treatment, humaneness, trust, dignity, integrity, identity freedom, stand point plurality and mutual enabling see Figure 2.7. Findings from the analysis established a relationship between each of these elements. It showed that all the items in the psychological empowerment scale were relevant and they all loaded strongly into three main factors which are **organisational identification**, **identity freedom** and **mutual enabler.** The factor organisational identification was derived from answers to questions like:

"My ideas are considered even when management disagrees with them"

"My suggestions are used to make decisions that affect me and my team"

These gives a sense of belonging, creates esteem and promotes dignity to the employee. For identity freedom, the questions asked was aimed at determining the level at which employees are involved in organisational affairs, autonomy in performing tasks and expression of individual uniqueness. Similarly, the factor mutual enabler was derived from answers to questions like:

"I am shown areas which need more training"

"Attention is given to my concerns and discussed patiently"

"I am told how my work fits into the company"

"I am shown genuine concern for my individual success"

© Eseigboria Grace Paula Ijasan, 2018

These questions gave an indication of the level of emotional recognition given to the employee, the humanness of the organisation, respect for the employee and trust on the part of the employee for the organisation. All of three factors were used to access the level of psychological empowerment.

To know the perception of workplace diversity, the items under this scale were designed to be answered with respect to the implementation of the BBBEE Act. Respondents were asked these questions to know the impact of fostering diversity through the implementation of the Act. All the items were also found to be relevant to the construct and loaded strongly into two main factors, namely **inclusiveness** and **equal treatment.** It looked at the live experience of the employees in organisations that strongly comply to the regulations of the BBBEE Act, how they are viewed and treated because they are directly impacted by whatever is the outcome of compliance to any initiative.

With all these scales developed for the fostering diversity index, the next section was achieved.

6.2.3 Exploring the Impact of BBBEE Act on Fostering Diversity

To explore the impact of the implementation of BBBEE on fostering diversity, the researcher took samples from nine top performing BEE companies in South Africa. The fostering diversity instrument developed in the previous section was employed and the data was analysed using SPSS 24. The following three hypotheses developed for this study were tested.

H_{o1}: The culture of an organisation does not significantly influence the social perception of BBBEE of the respondents

Cameron and Quinn (2006) opines that culture is the core of any organisation. It is the fabric that defines the organisation, the personality of the organisation as an entity. Hence, understanding it should be the first step in the change process. Conversely, Podsiadlowski et al., (2013), argues that the culture of an organisation determines its perception of diversity which directly relates to the successful management of diversity. The researcher chose to test their argument by first determining the culture type that exists within the organisations and then test the hypotheses if it holds true that culture influences the social perception of the implementation of BBBEE Act. The findings within the small sample of this research confirms the arguments about the relationship between culture and perception. Hypotheses **H_{o1}** was found to be significant, meaning that, for every change in the organisational culture, there is a reciprocal change in the perception of the implementation of BBBEE. So, if the culture type of

© Eseigboria Grace Paula Ijasan, 2018

an organisation is market, this will influence how it views the implementation of any diversity initiative. The company may decide to take advantage of the diversified work force for the purpose of gaining competitive advantage. Since part of the BBBEE requirement is to have a demographically representative work force, the company might see that as an opportunity to take advantage of the employees recruited locally, to extend their business. In the case of a foreign investor, compliance to BBBEE may be a welcomed opportunity to reach out to the local people. On the other hand, as Ely and Thomas (1999) points out, employees might see this as an exploitation of their uniqueness. It becomes difficult to distinguish between organisational recognition based on competence or simple compliance to government regulation. It is therefore important to state here that the findings from this study concur with the findings of Cox, (2001), Podsiadlowski et al., (2013) and Cottrill et al., (2014) that culture, specifically inclusive culture is an important prerequisite for successful diversity management and as such becomes an important factor in fostering diversity. With that thought on one hand, the researcher goes further to determine the relationship between psychological empowerments and perceptions of BBBEE.

Ho2: The psychological empowerment of the respondents does not significantly influence the social perception of BBBEE

The psychological empowerment of the employee seeks to find all the elements as identified in literature present in the organisations. It assures an employee an atmosphere that embraces diversity. The findings from testing this hypothesis were also found to be significant. This means that the presence of integrating values which is the psychological empowerment influences the social perceptions of BBBEE of employees. The BBBEE Act as earlier discussed in the literature review, is one of the transformational initiatives set up by the government to depolarize the work place. In the South African context, what this literally means is that, government wants to ensure that no race or gender is underrepresented in any organisation. In the light of that, Combs & Nadkarni (2005) warns that where the foundation of inclusionary policies may be conceptually similar, their implementation procedures may differ. Horwitz, and Jain (2011) therefore advises that those policies designed to intervene in sensitive issues like unfair discrimination must be careful to note the degree of convergence and divergence of implementation strategies. It is with this knowledge that the researcher deemed it important to investigate the relationship between psychological empowerment and social perception of BBBEE. The findings from the data obtained from the selected top BEE companies show that for every change in the elements grouped as psychological empowerment (this could also mean

© Eseigboria Grace Paula Ijasan, 2018

the presence or absence of the elements), there is a change in the social perception of BBBEE. For instance, a BEE highly rated company A, psychologically empowers them by creating an environment where they are recognised, they have identity freedom, there is mutual respect, employees have a sense of esteem and dignity for their job. Employees in company A will have a different perception of the implementation BBBEE compared to those in a similarly highly rated company where none of those elements exist. This finding makes psychological empowerment an important factor for fostering diversity.

Ho3: The culture of an organisation does not significantly influence the psychological empowerment of the respondents.

Having confirmed that the culture of an organisation and psychological empowerment are key factors for fostering diversity, the next step was to determine if the dominant culture type from the data obtained, had any influence on psychological empowerment. From the data, it was found that a mixed culture was practiced by all the companies; however, they all geared towards the hierarchy culture type. Testing the **Ho3** the hierarchy culture to determine its influence on psychological empowerment, data showed the relationship to be insignificant, meaning that hierarchy culture type has no influence on psychological empowerment. This is a relevant outcome as it confirms that the characteristics of the hierarchy culture is such that bears no compatible feature to the elements under psychological empowerment. It is a culture that has clear and precise procedures. Every mode of operation within such organisations are guided by policy and control. Any deviation from the norm will be considered a threat to the organisational structure. As such, employees may not feel psychologically empowered.

6.2.4 Establishing a relationship between BBBEE act and Fostering Diversity

With the first three objectives achieved, the study has been able to establish a link between the implementation of the Broad Based Black Economic Empowerment Act and fostering diversity. Data obtained from the study showed that gender was the only demographic variable that predicted workplace diversity. This means that based on the data, demographic representation through the implementation of BBBEE Act was mostly evident by gender. The link here is that of dimensions of diversity and gender satisfies as one of the dimensions of diversity.

The Broad Based Black Economic Empowerment Act was initiated to economically empower the previously disadvantaged. The findings from this study have shown that economic

© Eseigboria Grace Paula Ijasan, 2018

empowerment is not enough. It also showed that with implementation of BBBEE there has been a powershift which goes again to prove the inadequacy of economic empowerment alone. The study also revealed that there is a disconnect between government regulations and the internal state of affairs of the organisations, and it is this disconnect that limits the implementation from fostering diversity. Using the fostering diversity index, the disconnect was identified as organizational culture and psychological empowerment.

6.3 Implication of Research Findings

The implementation of the BBBEE Act and diversity management are topical discourse in South Africa. It is quite understandable given the history of the country and her people. A country that has known first-hand the consequences of what happens when diversity is poorly managed. Hence the concept of fostering diversity is important to the key stakeholders: the organisation and policy makers. It has been seen that with the current system, there are flaws that can lead to a pseudo kind of diversity whereas, what actually happens is numerical inclusion.

Having noted the flaws of the current system, it is noteworthy to say that the unanimous position agreed upon from the African management literature revealed that with the implementation of the BBBEE Act, there is a fair demographic representation of races and gender in organisations. It is important to state here that in the course of this study, it was noted that intent of the Broad Based Black Economic Empowerment Act to increase workforce diversity was indeed achieved. However, the implementation process was flawed because it did not emphasise commitment by embracing and fostering diversity. This study pushes the boundaries of limiting diversity management beyond crunching numbers to a much deeper level. It further points out the lack of sync between governments regulations and the organisations affairs with specific reference to culture. The implication of the finding agrees with Canham (2014) that interventions should not take on individualistic forms which circumvent systemic change to narrow interests of capitalism.

With the development of the Fostering Diversity Index FDI, this research has brought the key elements that fosters diversity to the fore. This index if properly used, can assist organisations in managing not just numerical inclusion of PDIs, but indeed in instilling a long-lasting culture that embraces the tenets of diversity. It is proposed that businesses need to adjust their BBBEE implementation policy to cover both strategic and operational levels so that the optimum gains of the act can be achieved.

© Eseigboria Grace Paula Ijasan, 2018

It is also suggested that government reviews the current act, with a view to reassigning weightings in such a way that promotes the 'diversity agenda' inherently achievable rather than the current glossy approaches of numerical inclusion.

6.3.1 Implications to Policy

An objective of this research was to know the current understanding of the Broad Based Black Economic Empowerment Act. To know the general perceptions of employees who directly impacted with the transformational initiative. This first step is significant to any change process. It provides policy makers an opportunity to review the implementation process and the impact of the policy.

It was found that the implementation process of the BBBEE Act achieved great compliance. The government conducts employer audits through the Department of Labour which makes sure there is no underrepresentation in the workforce. The findings from this research showed the disconnect between the government regulations and the internal structure of the organisations. The implication of this disconnect will lead to the unsuccessful implementation of the transformational initiatives which may not foster diversity as in the case of the BBBEE Act.

The research provides policy makers a useful instrument to assess the level of fostering diversity within organisation prior to enforcing compliance to any diversity initiative. A one size fits all policy may end up tearing people apart, Booysen (2007). This implies that by logical reasoning, the relevant government agencies should review the Act with a view to

6.3.2 Implication for Social Identity Theory

According to Tajfel (1979) the groups in which people belonged are an important source of pride and self-esteem. He proposed that stereotyping (i.e. putting people into groups and categories) is based on a normal cognitive process: the tendency to group things together. In doing so we tend to exaggerate:

1. the differences between groups

2. the similarities of things in the same group. Mcleod (2008)

Similarly, in South Africa, such stereotypical categorization exists. Booysen (2006; 2007) highlights that South Africa is a diverse society with many identities imbedded in its societal

© Eseigboria Grace Paula Ijasan, 2018

fabric; it has race, gender, ethnicity and language as its most salient identity groups. Given the propositions of Tajfel and Booysen, this research helps to understand the social perceptions of diversity within the organisations. Findings from literature revealed that there is a back and forth powershift between the from the "minority" to the "majority" which accounts for the conflicts that exist in the organisation. However, a look into the influence of organisational culture on psychological empowerment, revealed that with an inclusive culture that embraces employee psychological empowerment, less emphasis will be given to stereotypical categorisations.

6.4 Limitations of the Research

Given the sensitivity of the study, it became impossible to enrich the study with qualitative data. The inclusion of a focused group data collection method would have made it easier to compare literature findings on the current understanding of the BBBEE Act with results from the focused group. This would have further elucidated the findings from this research. However, because this study has developed well-structured questions to seek the opinions and perception of respondents in relation to research area, it still maintained the interpretivist and investigative philosophy as stated by Creswell s2010) in section 3.2.3.

The use of purposive sampling may evoke argument of the justification for generalisation of results. It can be argued that companies not on the EmpowerDex list of top performers might possess elements that place them as leaders of diversity. However, they do not qualify as a top performer on the basis of their inability to meet either of the BBBEE objectives. The rationale for using the EmpowerDex list is to evaluate if by way of implementing the BBBEE Act, diversity in the workplace is also being fostered. Findings from this research may be taken further by future research to compare the level of fostering diversity between companies implementing the Act and those who are not.

Another limitation was the difficulty of access to key individuals to partake in the pilot study. Sensitivity of the study caused a lot of setback in the data collection process. The initial plan of sending e-surveys using Qualtrics in the main study, was changed to telephonic and face to face method during the data collection process. It was observed that not only were the responses poor, some of the data was unusable because the responses were incomplete. To authenticate the data **Kaiser-Meyer-Olkin** test and **Bartlett's Test of Spherity test** were carried out to determine the suitability of the instrument, then Cronbach alpha values were

© Eseigboria Grace Paula Ijasan, 2018

obtained to determine the reliability, convergent validity, construct or composite validity and discriminant validity were conducted to establish validity of the data.

Furthermore, the step down from the earlier proposed large sample size of 1200 to 270 as a result of the poor/non-response from the electronic survey, the researcher was unable to carry out in depth analysis within each organisation but rather used companies within similar sectors. The data therein obtained was analysed as one sample frame. So rather than having 12 companies from different sectors, nine companies were selected from three sectors namely, financial services, banks and insurance.

6.5 Opportunity for Future Research

This study has taken an innovative view into the concept of fostering diversity using the South African's Broad Based Black Economic Empowerment Act as a tool. A further research can be the validation of the model used in this study in another context. There is however substantial scope to develop on these ideas beyond the context used as well as explore them in different contexts. For example, further research can look at more sectors and compare fostering diversity between the high and low BEE performing companies. It can also be an ethnographic research into companies that existed before BEE and BBBEE. To investigate their perception of fostering after the intervention.

There is also an opportunity to engage in a qualitative study that will involve bringing together all the stakeholders. Creating focus groups and the use of structured interviews for a sensitive subject as this, might ease the minds of the respondents to participate and give more opinions. This will further broaden the perceptions of the BBBEE Act as well as evoke more dimension to fostering diversity.

Furthermore, since the tool has 'now' and 'preferred' sections, a strategic intervention can be conducted using the research framework to see how diversity can be improved in selected companies.

6.6 Conclusion

The question as to if the implementation of the Broad Based Black Economic Act fosters diversity may remain empirically unanswered for a while. Arguably, the benefits of diversity cannot be overemphasised, however, tracking its effectiveness might be elusive. Legislating diversification and empowerment is seen to be a daunting task as many companies find it too easy to find a way around the spirit of the act and thereby sticking solely to its letter. This research has shown that fostering diversity is possible, the BBBEE Act has good potential of fostering it, but there are loopholes in its implementation. These loopholes make it onerous to

© Eseigboria Grace Paula Ijasan, 2018

achieve the task of fostering diversity. It is also noteworthy to stress the fact that although the sample size of this research, makes it difficult to generalise its findings, these findings nevertheless are invaluable indicators of not just the status quo, but also future directions of workplace diversity in South Africa.

© Eseigboria Grace Paula Ijasan, 2018

References

Abrams, D. & Hogg, M. A. (2010). Social identity and self-categorization. The SAGE handbook of prejudice, stereotyping and discrimination.

Acemoglu, D., Gelb, S., & Robinson, J. A. (2007). Black economic empowerment and economic performance in South Africa. Cambridge, MA: Center for Economic Development, Working Paper, 2003.

Alagidede, P., Koutounidis, N., & Panagiotidis, T. (2017). On the stability of the CAPM before and after the financial crisis: Panel evidence from the Johannesburg Securities Exchange. African Review of Economics and Finance, 9(1), 180-189.

Allen, S. (2011), The Gender Dividend – Transforming business through the leadership of women, 21 January 2011, www.deloittes.com accessed 25 May 2012.

ANC (African National Congress) (2002): Resolution adopted by the 51st national conference of the African National Congress Stellenbosch: resolution of economic transformation; Online: ttp://www.anc.org.za/ancdocs/history/conf/conference51/resolutions. HTML (accessed 29 February. 2018).

Ancona, D. G., & Caldwell, D. F. (1992). Bridging the boundary: External activity and performance in organizational teams. Administrative science quarterly, 634-665.

Arciniega, L. M., & Menon, S. T. (2013). The power of goal internalization: studying psychological empowerment in a Venezuelan plant. The International Journal of Human Resource Management, 24(15), 2948-2967.

Armstrong-Stassen, M., & Templer, A. (2005). Adapting training for older employees: The Canadian response to an aging workforce. Journal of management development, 24(1), 57-67.

Arredondo, P. (1996). Successful diversity management initiatives: A blueprint for planning and implementation. Sage.

Ashkanasy, N. M., Broadfoot, L. E., & Falkus, S. A. (2000). Questionnaire measures of organizational culture. In Handbook of Organizational Culture and Climate, edited by Neal M. Ashkanasy, Celeste P. M. Wilderom, and Mark F. Peterson, 131–46. Thousand Oaks, CA: Sage Publications.

Ashton 2010, the dimensions of diversity. 18 May 2010. Ashton Fourie: Blog. http://ashtonfourie.com/blog1/2010/05/18/the-dimensions-of-diversity/ (Accessed on 5 November 2014

Balkundi, P., Kilduff, M., Barsness, Z. I., & Michael, J. H. (2007). Demographic antecedents and performance consequences of structural holes in work teams. Journal of Organizational Behavior: The International Journal of Industrial, Occupational and Organizational Psychology and Behavior, 28(2), 241-260.

Ball, P., Monaco, G., Schmeling, J., Schartz, H., & Blanck, P. (2005). Disability as diversity in Fortune 100 companies. Behavioral Sciences & the Law, 23(1), 97-121.

Balogh, A., Gaál, Z., & Szabó, L. (2011). Relationship between organizational culture and cultural intelligence. Management & Marketing, 6(1), 95.

Balshaw, A. & Golberg, J. (2008) Broad-Based Black Economic Empowerment Final Codes & Scorecard. 2nd ed. Cape Town: Human & Rousseau.

© Eseigboria Grace Paula Ijasan, 2018

Bantel, K. A., & Jackson, S. E. (1989). Top management and innovations in banking: Does the composition of the top team make a difference? Strategic management journal, 10(S1), 107-124.

Barabino, M. C., Jacobs, B., & Maggio, M. A. (2001). Il Diversity Management, in "Sviluppo & Organizzazione", n. 184, marzo-aprile.

Barinaga, E. (2007). Cultural diversity' at work: 'national culture' as a discourse organizing an international project group. Human Relations, 60, 315-340.

Barnes, B. (2013). Scientific knowledge and sociological theory. Routledge.

Bassett-Jones, N. (2005). The Paradox of Diversity Management, Creativity and Innovation. Creativity and Innovation Management, 14(2), 169-175.

Beach, M. C., Cooper, L. A., Robinson, K. A., Price, E. G., Gary, T. L., Jenckes, M. W. & Bass, E. B. (2004). Strategies for Improving Minority Healthcare Quality. Evidence Report/Technology Assessment No. 90.

Beall, J., Gelb, S. & Hassim, S. (2005) Fragile Stability: State and Society in Democratic South Africa. Journal of Southern African Studies 31(4), 681-700.

Bench Marks Foundation (2008): Policy gap 2: review of the corporate social responsibility programmes of the platinum, coal, gold and uranium mining sectors in South Africa, Johannesburg.

Bentler, P. M. (1990). Comparative fit indexes in structural models. Psychological bulletin, 107(2), 238-46

Bernardi, E., & De Toni, A. F. (2009). Managing cultural diversity: integration values and management skills. In Proceedings of the 20th Annual Conference on Production and Operations Management (pp. 1-24).

Berrio, A. A. (2003). An organizational culture assessment using the competing values framework: A profile of Ohio State University Extension. Age, 2(699), 1-052. Available from

Berry, J. W. (1984). Cultural relations in plural society: Alternatives to segregation and their socio psychological implications. In N. Miller & M. B. Brewer (Eds.), Groups in Contact. New York: Academic Press.

Beugre', C. D. & Offodile, O. F. (2001). Managing for organizational effectiveness in sub-Saharan Africa: A culture-fit model. International Journal of Human Resource Management, 3 (12), 535-550.

Bezuidenhout, M. (2011). The development and evaluation of a measure of graduate employability in the context of the new world of work (Doctoral dissertation, University of Pretoria).

Bhadury, J., Mighty, E. J., & Damar, H. (2000). Maximizing workforce diversity in project teams: A network flow approach. Omega, 28(2), 143-153.

Bhorat, H. and van der Westhuizen, C. (2008), "Economic growth, poverty and inequality in South Africa", Paper Commissioned by the Presidency of the Republic of South Africa, pp. 1-13.

Bilimoria, D. (2006). The relationship between women corporate directors and women corporate officers. Journal of Managerial Issues, 18(1), 47-61.

Blaikie, N. (2000). Designing Social Research (1st ed.). Cambridge: Polity Press.

© Eseigboria Grace Paula Ijasan, 2018

Blanton, H., Crocker, J. & Miller, T (2000) The Effects of In-Group versus Out-Group Social Comparison on Self-Esteem in the Context of a Negative Stereotype. Journal of Experimental Social Psychology 36, 519–530

Blumer, H. (1958). Race prejudice as a sense of group position. Pacific Sociological Review, 1(1), 3-7.

Bond, P. 2000. Elite Transition, from Apartheid to Neo-liberalism in South Africa, Pietermaritzburg: University of Natal Press.

Booysen, L. (2007). Societal power shifts and changing social identities in South Africa: workplace implications: management. South African Journal of Economic and Management Sciences= Suid-Afrikaanse Tydskrif vir Ekonomiese en Bestuurswetenskappe, 10(1), 1-20.

Bosch, G.S. (2007). Restitutions or discriminations? Lessons from Affirmative action from South African Employment Law. Web Journal of current Legal Issues. 4. Accessed from www.webjcli.ncl.ac.uk/2007/issue4/bosch4.html.

Broughton, A., & Strebler, M. (2008). Reaping Benefits from Diversity. Strategic HR Review journal, 7(5), 5-10.

Browne, M. W. (2001). An overview of analytic rotation in exploratory factor analysis. Multivariate Behavioral Research, 36, 111-150.

Burger, R., & Jafta, R. (2006). Returns to race: Labour market discrimination in post-apartheid South Africa. University of Stellenbosch Economic Working Papers, 4(06).

BusinessTech (2017) Battle of the banks: how SA's big five banks compare. Available from https://businesstech.co.za/news/banking/182873/battle-of-the-banks-how-sas-big-five-banks-compare/ Accessed on 30th October 2018

Burger, R., & Jafta, R. (2010). Affirmative action in South Africa: an empirical assessment of the impact on labour market outcomes. CRISE (Centre for Research on Inequality, Human Security and Ethnicity) Working Paper, 76, 09-36.

Burgoon, J. K., Guerrero, L. K., & Floyd, K. (2016). Nonverbal communication. Routledge.

Cameron, K. S., & Quinn, R. E. (2011). Diagnosing and changing organizational culture: Based on the competing values framework. John Wiley & Sons.

Cameron, K. S., Quinn, R. E. (2006). Diagnosing and changing organizational culture: Based on the Competing Values Framework. San Francisco, CA: Jossey Bass.

Campbell, S. (2013). Over-education among A8 migrants in the UK. Institute of Education DoQSS Working Paper, (13-09).

Cangur, S. & Ercan, I. (2015) "Comparison of Model Fit Indices Used in Structural Equation Modeling Under Multivariate Normality," Journal of Modern Applied Statistical Methods: Vol. 14: Iss. 1, Article 14.

Canham, H. M. (2014). Employment equity discourses and practices of empowerment and identity in a bank (Doctoral dissertation). University of the Witwatersrand, South Africa.

Cao, Z., Huo, B., Li, Y., & Zhao, X. (2015). The impact of organizational culture on supply chain integration: a contingency and configuration approach. Supply Chain Management: An International Journal, 20(1), 24-41.

Carmeli, A., Brueller, D., & Dutton, J. E. (2009). Learning behaviours in the workplace: The role of high-quality interpersonal relationships and psychological safety. Systems Research and Behavioral Science, 26(1), 81-98.

© Eseigboria Grace Paula Ijasan, 2018

Carmeli, A., Reiter-Palmon, R., & Ziv, E. (2010). Inclusive Leadership and Employee Involvement in Creative Tasks in the Workplace: The Mediating Role of Psychological Safety. Creativity Research Journal, 22(3), 250-260.

Cattell, R. B. (1966). The scree test for the number of factors. Multivariate behavioral research, 1(2), 245-276.

Chang, M. J. (2003). Racial differences in viewpoints about contemporary issues among entering college students: Fact or fiction? NASPA Journal, 40(4), 55–71.

Choi, Y.S., Seo, M., Scott, D., Martin, J. (2010). Validation of the Organizational Culture Assessment Instrument: An application of the Korean version. Journal of Sport Management 2(4): 169–189.

Chrobot-Mason, D. (2004). Managing Racial Differences: The Role of Majority Managers' Ethnic Identity Development on Minority Employee Perceptions of Support. Group & Organization Management, 29 (1), 5-31.

Chrobot-Mason, D., & Aramovich, N. P. (2013). The Psychological Benefits of Creating an Affirming Climate for Workplace Diversity. Group & Organization Management, 38(6), 659-689. doi:10.1177/1059601113509835

Chung-Herrera, B. G., & Lankau, M. J. (2007). Racioethnic diversity and leadership: What do we know and where do we go? Paper presented at the Paper presented at the Academy of Management Conference, Philadelphia, PA.

Chung, K. C., Pillsbury, M. S., Walters, M. R., & Hayward, R. A. (1998). Reliability and validity testing of the Michigan Hand Outcomes Questionnaire. The Journal of hand surgery, 23(4), 575-587.

CIA Report (2017), Countries and their Ethnic Groups

Coetzee, M. & Bezuidenhout, M. (2011). The fairness of affirmative action: In the eye of the beholder. Southern African Business Review, 15 (2), 75-96.

Combs, G. M., Nadkarni, S., & Combs, M. W. (2005). Implementing Affirmative Action Plans in Multinational Corporations. Organizational Dynamics, 34(4), 346-360.

Cottrill, K., Lopez, P. D., & Hoffman, C. C. (2014). How Authentic Leadership and Inclusion Benefit Organizations. Equality, Diversity and Inclusion: An International Journal, 33(3), 275-292.

Cox Jr, T. (2001). Creating the multicultural organization: A strategy for capturing the power of diversity. Jossey-Bass.

Cox, T. & Blake, S. (1991). Managing cultural diversity: Implications for organisational competitiveness. The Executive, 5 (3), 45-55.

Cox, T. H. (1991). The Multicultural Organization. The Executive, 5(2), 34-47.

Creswell, J. W., & Creswell, J. D. (2017). Research design: Qualitative, quantitative, and mixed methods approaches. Sage publications.

Cronbach, L. J. (1951). Coefficient alpha and the internal structure of tests. psychometrika, 16 (3), 297-334.

Crosby, F. J., Iyer, A., & Sincharoen, S. (2006). Understanding Affirmative Action. Annual review of psychology, 57(1), 585-611.

© Eseigboria Grace Paula Ijasan, 2018

Crotty, M. (1998). The foundations of social research: Meaning and perspective in the research process. Sage.

Dass, P., & Parker, B. (1999). Strategies for Managing Human Resource Diversity: From resistance to learning. The Academy of Management Executive, 13(2), 68-80.

Dawson, C. (2009). Introduction to Research Methods: A practical guide for anyone undertaking a research project (4 ed.). Oxford, UK: How to books Ltd.

Deane, T. (2005) Affirmative Action: A Comparative Study. Ph. D. thesis, University of South Africa.

Dekker, C. (2004). The Way to BEE, a Guide to Broad-based Black Economic Empowerment in South Africa [online]. http://www.cliffedekker.com/literature/bee/index. (accessed 20/02/2017)

Department of Trade and Industry (2008a) A Strategy for Broad-Based Black Economic Empowerment. Department of Trade and Industry: South Africa. Available from http://www.thedti.gov.za/bee/complete.pdf (accessed 22/02/2017).

Dijk, H., Engen, M., & Paauwe, J. (2012). Reframing the Business Case for Diversity: A Values and Virtues Perspective. Journal of Business Ethics, 111(1), 73-84.

Dóci, E. and Hofmans J (2015) Task complexity and transformational leadership: The mediating role of leaders' state core self-evaluations, The Leadership Quarterly 26, 436–447

Dovidio, J.F., 2010. The SAGE handbook of prejudice, stereotyping and discrimination. Sage Publications.

DTI (2005), "Framework for Measurement of Broad-Based Black Economic Empowerment: The Organisation of Codes of Good Practice – Elements of BBBEE", Phase 1 2005 Codes, Department of Trade and Industries, available at: www.dti.gov.za

Duffett, R.G. (2011). Employment equity issues in the Cape Town advertising industry: A black economic empowerment perspective. African Journal of Business Management, 5(15), pp. 6271-6286.

Duffield, V.C., 2008. Exploring the discursive nuances of the South African xenophobic experience: Exclusionary tactics and tensions. Unpublished thesis. Cape Town: University of Cape Town. Available at: http://web. uct.ac.za/depts/psychology/postgraduate/ [accessed on 4 March 2010].

Durkheim, E. (1972). His Life and Work. NY: Harper and Row.

Duze, C. O. (2012). Leadership Styles of Principals and Job Performance of Staff in Secondary Schools in Delta State of Nigeria. An International Journal of Arts and Humanities, 1(2), 224-245

Easterby-Smith, M., Thorpe, R., & Lowe, A. (2002). Management Research: An Introduction (2 ed.). London: Sage Publications.

Eisman, A. B., Zimmerman, M. A., Kruger, D., Reischl, T. M., Miller, A. L., Franzen, S. P., & Morrel-Samuels, S. (2016). Psychological Empowerment Among Urban Youth: Measurement Model and Associations with Youth Outcomes. American Journal of Community Psychology, 58(3-4), 410-421

Ely, R. J., & Thomas, D. A. (2001). Cultural diversity at work: The moderating effects of work group perspectives on diversity. Administrative Science Quarterly, 46, 229-273

© Eseigboria Grace Paula Ijasan, 2018

Emuze, F. and Adlam, R. (2013). Implementation of Broad-Based Black Economic Empowerment in construction: A South African metropolitan area study. Acta Structilia: 20(1), 126-154.

Engbersen, G., Leerkes, A., Grabowska-Lusinska, I., Snel, E. & Burgers, J. 2013. On the differential attachments of migrants from Central and Eastern Europe: A typology of labour migration. Journal of Ethnic and Migration Studies, 39, 959-981.

Engbersen, G., Snel, E. & De Boom, J. 2010. A van full of poles: Liquid migration In Eastern and Central European countries. In: Black, R., Engbersen, G., & Okólski, M. (Eds.). (2010). A continent moving west?: EU enlargement and labour migration from Central and Eastern Europe. Amsterdam University Press.

Evans, K. (2015). 2-Developing the Creative Potential of The Workforce: Rethinking the Part That Work-Based Learning Can Play. Towards a new understanding of workplace learning: the context of.

Farrell, A. M. (2010). Insufficient discriminant validity: a comment on Bove, Pervan, Beatty, and Shiu (2009). Journal of Business Research, 63(3), 324–327.

Farrell, A.M & Rudd, J.M. (2009). Factor Analysis and Discriminant Validity: A Brief Review of some Practical Issues. ANZMAC. Pg. 1-9

Ferner, A., Almond, P., & Colling, T. (2005). US multinationals, competitive advantage and the diffusion of HR policy: The case of workforce diversity. Journal of International Business Studies, 36, 304-321.

Ferreira, P., & De Villiers, C. (2011). The association between South African listed companies' BEE scores and market performance: An introductory study. Meditari Accountancy Research, 19(1/2), 22-38.

Field, A. (2009). Discovering Statistics Using SPSS (3rd Edition). London: SAGE Publications Ltd.

Forgas, J.P., Kruglanski, A.W. and Williams, K.D., 2011. The Psychology of Social Conflict and Aggression Homo Aggressivus Revisited. The Psychology of Social Conflict and Aggression, 13, p.1.

Forza, C., & Filippini, R. (1998). TQM impact on quality conformance and customer satisfaction: a causal model. International journal of production economics, 55(1), 1-20.

Fralinger, B., & Olson, V. (2011). Organizational Culture at the University Level: A study using the OCAI instrument. Journal of College Teaching & Learning (TLC), 4(11).

Fuhr, I (1994) Worlds apart: Managing workforce polarisation. People Dynamics, 12:9-17.

FW de Klerk Foundation (2006) Transformation and Black Economic Empowerment in South Africa. The FW de Klerk Foundation: South Africa. Available from www.fwdklerk.org.za (accessed 20/02/2017)

Giambatista, R. C., & Bhappu, A. D. (2010). Diversity's Harvest: Interactions of diversity sources and communication technology on creative group performance. Organizational Behaviour and Human Decision Processes, 111, 116-126.

Gilbert, J., Stead, B., & Ivancevich, J. (1999). Diversity Management: A New Organizational Paradigm. Journal of Business Ethics, 21(1), 61-76.

© Eseigboria Grace Paula Ijasan, 2018

Globalisation and business (2013) http://www.tutor2u.net/business/external/globalisation_effects.htm (Accessed on 10 March 2017)

Goldkuhl, G. (2012). Pragmatism vs Interpretivism in Qualitative Information Systems Research. European Journal of Information Systems, 21(2), 135-146.

GovernmentGazette. (2003). National Small Business Amendment Act 2003. Cape Town: Government Gazette South Africa.

GovernmentGazette. (2004). Broad Based Black Economic Empowerment Act, 2003 (25899). Cape town: Government Gazette.

GovernmentGazette. (2013). Broad-Based Black Economic Empowerment Act (53/2003) Issue of code of good practice. Pretoria: Government Gazette.

GovernmentGazette. (2014). Broad Based Black Economic Empowerment Act. Cape Town.

Gqubule, D. 2006. Making Mistakes, Right Wrongs, Johannesburg: Jonathan Ball.

Greybe, L. & Uys, F.M. (2001). Strategies for diversity management. Journal of Public Administration, 36 (3), 185-201.

Guillaume, Y. R., Dawson, J. F., Otaye-Ebede, L., Woods, S. A., & West, M. A. (2017). Harnessing demographic differences in organizations: What moderates the effects of workplace diversity? Journal of Organizational Behavior, 38(2), 276-303.

Guillaume, Y. R., Dawson, J. F., Priola, V., Sacramento, C. A., Woods, S. A., Higson, H.E.,West, M. A. (2013). Managing Diversity in Organizations: An integrative model and agenda for future research. European Journal of Work and Organizational Psychology(ahead-of-print), 1-20.

Gummesson, E. (2000). Qualitative Methods in Management Research (Second ed.). Thousand Oaks, London, new Delhi: Sages Publication, Inc.

Hair, J. F., Black, W.C., Babin, B.J. & Anderson, E.R (2010). Multivariate Data Analysis. 7th Edition. Pearson Prentice Hall.

Harris, C., Rousseau, G.G., & Venter, D.J.L. (2013). Employee Perceptions of Diversity management at a Tertiary Institution. South African Journal of Economic and Management Sciences, 10(1), 51-71.

Harrison, D. A., & Sin, H. P. (2005). What is diversity and how it should be measured. In A. M. Konrad & P. Prasad (Eds.), Handbook of workplace diversity (pp. 191-216). Newbury Park, CA: Sage.

Hartnell, C.A., Ou, A.Y., Kinicki, A.J. (2011). Organizational culture and organizational effectiveness: A meta-analytic investigation of the Competing Values Framework's theoretical suppositions. Journal of Applied Psychology. 96: 677–694.

Henning, E., Van Rensburg, W., & Smit, B. (2004). Finding Your Way in Qualitative Research: Van Schaik Publishers.

Herholdt, W & Marx, M. (1999) Employment equity in South Africa: a guide to affirmative action success. South Africa: Prentice Hall.

Heritage, B., Pollock, C., Roberts, L. (2014). Validation of the Organizational Culture Assessment Instrument. PLoS ONE 9(3), 1-10.

© Eseigboria Grace Paula Ijasan, 2018

Hogg, M. A. (2006). Social identity theory. Contemporary social psychological theories, 111-136.

Hogg, M. A., & Turner, J. C. (1985). Interpersonal attraction, social identification and psychological group formation. European Journal of Social Psychology, 15(1), 51-66.

Homan, A. C., & Greer, L. L. (2013). Considering Diversity: The positive effects of considerate leadership in diverse teams. Group Processes & Intergroup Relations, 16(1), 105-125.

Horn, R. (2009). Researching and writing Dissertations: A complete guide for business and management students. London: Chartered Institute of Personnel and Development.

Horwitz, F. M and Jain, H (2011). 'An assessment of Employment Equity and Broad Based Black Economic Empowerment in South Africa.' Equality, Diversity and Inclusion: An International Journal, 30 (4) 297-317.

https://www.businesslive.co.za/bd/national/2017-03-14-what-to-expect-from-the-hearings-on-financial-services/

Hu, L.& Bentler, P.M (1999) Cut -off criteria for fit indexes in covariance structure analysis: Conventional criteria versus new alternatives, Structural Equation Modeling: A Multidisciplinary Journal, 6:1, 1-55.

Human, D. (2006). Implementation of affirmative action and Black economic empowerment (BEE) in the construction industry. Unpublished Honours Research. University of Free State.

Islam, G. (2014). Social Dominance Theory. In Encyclopedia of Critical Psychology (pp. 1779-1781). Springer, New York, NY.

Jack, V., & Harris, K. (2007). Broad-based BEE: The complete guide. Frontrunner Publishing (Pty) Limited.

Janice L. Dreachslina, Robert Weech-Maldonadob, Kathryn H. Dansky, (2004) "Racial and ethnic diversity and organizational behaviour: a focused research agenda for health services management" Social Science & Medicine 59 (2004) 961–971

Janice R. W. Joplin and Catherine S. Daus (1997) Challenges of Leading a Diverse Workforce the Academy of Management Executive (1993-2005) Vol. 11, (3), pp. 32-47

Janse Van Rensburg, K. & Roodt, G. (2005). The perceptions of employment equity and black economic empowerment as predictors of union commitment. South African Journal of Industrial Psychology, 31 (1), 55-64

Jenkins, R. (2014). Social identity. Routledge. Accessed December 5, 2014

Jgaskin (2017). Exploratory Factor Analysis. http://www. statwiki.kolobkreations.com/index.php? title=Exploratory_Factor_Analysis.

Johnson, P., & Duberley, J. (2000). Understanding Management Research: An introduction to epistemology (1 ed.). London: Sage Publications.

Johnston, A. (2014). South Africa. A&C Black. Accessed January 10, 2015

Joshi, A., & Roh, H. (2007). Context Matters: A multilevel framework for work team diversity research. In J. Martocchio (Ed.), Research in Personnel and Human Resource Management (Vol. 26, pp. 1-48). Greenwich, CT: JAI Press.

Juggernath, S., Rampersad, R., & Reddy, K. (2013). Corporate responsibility for socio-economic transformation: A focus on broad-based black economic empowerment and its

© Eseigboria Grace Paula Ijasan, 2018

implementation in South Africa. African Journal of Business Management, 5(20), 8224-8234.

Jung, T., Scott, T., Davies, H. T. O., Bower, P., Whalley, D., et al. (2009). Instruments for exploring organizational culture: A review of the literature. Public Administration. 69, 1087–1096.

Kaiser, H. F. (1970). A second-generation little jiffy. Psychometrika. 35: 401-415.

Kalliath, T. J., Bluedorn, A. C., & Gillespie, D. F. (1999). A confirmatory factor analysis of the competing values instrument. Educational and Psychological Measurement, 59(1), 143-158.

Kandola, R., & Fullerton, J. (1998). Managing the Mosaic: Diversity in Action (2nd ed.). London: Institute of Personnel Development.

Kelly, E., & Dobbin, F. (1998). How Affirmative Action became Diversity Management: Employer response to antidiscrimination law, 1961 to 1996. American Behavioural Scientist, 41, 960–984.

Kemp, N. (1992). Affirmative action: Legal obligation or prudent business. Human Resources Management, 12-14.

Kinyanjui, S. (2013). Innovative Strategies for Managing Workforce Diversity in Kenyan Leading Corporations in present global scenario. International Journal of Business and Management, 8(15).

Klerk Foundation, (2006). Transformation and Black Economic Empowerment in South Africa. Accessed from http://www.rhetoricafrica.org/pdf/bee_all_w.pdf on 27th, February 2017.

Kleynhans, E.P.J. and Kruger, M.C., (2014). Effect of Black Economic Empowerment on profit and competiveness of firms in South Africa', Acta Commercii. 14(1), 10 pages.

Kochan et al., (2003) The effects of diversity on business performance: report of the diversity research network. Human resource Management, 42(1); 3-21

Kochan, T., Bezrukova, K., Ely, R. J., Jackson, S., Joshi, A., Jehn, K. A., Leonard, J., et al. (2003). The effects of diversity on business performance: Report of the diversity research network. Human Resource Management, 42(1), 3-21.

Konrad, A. M., & Linnehan, F. (1995). Race and sex differences in line managers' reactions to equal employment opportunity and affirmative action interventions. Group and Organization Management, 20(4), 409-439.

Kossek, E. E., & Lobel, S. A. (1996). Managing Diversity: Human Resource Strategies for Transforming the Workplace. Cambridge, MA: Blackwell.

Kothari, C. R. (1985). Research Methodology- Methods and Techniques. New Delhi: Wiley Eastern Limited

Kothari, C. R. (2004). Research Methodology: Methods and techniques (2nd ed.). New Delhi: New Age international publishers.

KOTzE, E., MEnon, S. T., and Vos, B. (2007). Psychological empowerment in the South African military: The generalisability of Menon's Scale. SA Journal of Industrial Psychology, 33(2), 1-6.

Kreitner, R. And Kinicki, A. (2007). Organizational behaviour. 7thed. New York: McGraw-Hill.

© Eseigboria Grace Paula Ijasan, 2018

Krüger, L. (2011). The impact of black economic empowerment (BEE) on South African businesses: Focusing on ten dimensions of business performance. Southern African Business Review, 15(3), 207-233.

Krüger, L.P. (2010). The impact of black economic empowerment (BEE) on South African businesses: Focusing on ten dimensions of business performance. Southern African Business Review. 15(3), 207-233.

Kumar, R. (2005). Research Methodology-A Step-by-Step Guide for Beginners (2nd ed.). Singapore: Pearson Education.

Langer,E.J. (1978) Rethinking the role of thought in social interaction. In J. Harvey, W. Ickes, R. Kiss (Eds.). New Directions in Attribution Research, 2, 35-58.

Leila Patel & Lauren Graham (2012) How broad-based is broad-based black economic empowerment? Development Southern Africa, 29:2, 193-207.

Leonard, A., & Grobler, A.F. (2006). Exploring challenge to transformational leadership communication about employment equity: Managing organizational change in South Africa. Journal of Communication Management, 10(4), 390−406.

Lewis, D. (1996). The organizational culture saga—From OD to TQM: A critical review of the literature. Part 1—Concepts and early trends. Leadership & Organization Development Journal 17: 12–19.

Lindgren, M., & Packendorff, J. (2009). Social Constructionism and Entrepreneurship. International Journal of Entrepreneurial Behaviour & Research, 15(1), 25-47.

Livesey, C. (2006). The Relationship between Positivism, Interpretivism and sociological research methods. Retrieved from http://www.sociology.org.uk

Loden, M., & Rosener, J. (1991). Workforce America Managing Employee Diversity as Vital Resource (Vol. 1). Homewood, IL Business One-Irwin,

Luthans, F., Luthans, B. C., & Luthans, K. W. (2015). Organizational Behavior: An Evidence Based Approach. IAP.

Mackie, D. (1984). Social comparison in high- and low-status groups. Journal of Cross-Cultural Psychology, 15(4), 379–398

Maier, C. (2002). leading Diversity: A Conceptual Framework: Institute for Leadership and HR Management.

Maier, C. (2005). A conceptual framework for leading diversity. Int. J. Human Resources Development and Management, 5(4), 412 - 424.

Mandla, B. (2006), BEE and Malaysia's NEP: a comparative study, Master's thesis, University of Stellenbosch.

Mannix, E., & Neale, M. A. (2005). What Differences Make a Difference? The Promise and Reality of Diverse Teams in Organizations. Psychological Science in the Public Interest, 6(2), 31-55.

Martha, T.M. (2010). Application of the Employment Equity Act and diversity in the mining industry. Unpublished Honours Research. North West University.

Martins, L. L., & Parsons, C. K. (2007). Effects of gender diversity management on perceptions of organizational attractiveness: The role of individual differences in attitudes and beliefs. Journal of Applied Psychology, 92(3), 865-875.

© Eseigboria Grace Paula Ijasan, 2018

Mason, G. and Watson, G., 2005. The Role of HR in Facilitating Black Economic Empowerment [online]. http://www.workinfo.com (accessed 20/02/2017)

Mazur, B. (2010). Cultural Diversity in Organizational Theory and Practice. Journal of Intercultural Management, 2(2), 5-15.

Mbeki, M. (2009). Architects of Poverty: Why African Capitalism Needs Changing. Johannesburg: Picador.

McCuiston, V. E., Wooldridge, B. R., & Pierce, C. K. (2004). Leading the diverse workforce: Profit, prospects and progress. Leadership & Organization Development Journal, 25(1), 73-92.

McDermid, D. (2006). Pragmatism. Internet Encyclopedia of Philosophy: Peer reviewed. Retrieved from http://www.iep.utm.edu/pragmati/

McLeod, S. A. (2008). Social identity theory. Retrieved from www.simplypsychology.org/social-identity-theory.html

Mehta, U and Ward, M. (2017) The relationship between a black economic empowerment score and shareholder returns in Johannesburg Stock Exchange-listed companies, Southern African Business Review, 21; 85-97.

Migiro, S. SMEs and Black Economic Empowerment in the Construction Industry: The Case of Gauteng Provincial Housing Department.

Miller, M. J. Reliability and Validity. Graduate Research Methods. Western International University.

Mitchell, V. (1996). Assessing the reliability and validity of questionnaires: An empirical example. Journal of Applied Management studies, 5(2).

Mohamed, G. and Roberts, S. (2008). Weak links in the BEE chain? Procurement, skills and employment equity in the metals and engineering industries. Journal of Contemporary African Studies. 26 (1), 27-50.

Mputa, C.K. (2016). Evaluating the implementation of Employment Equity in a Pharmaceutical Company: A Case Study. Unpublished thesis. Stellenbosch University.

Mtembu, L. (2011). Examining the adequacy of the policy of Broad Based Black Economic Empowerment to address the need for psychological empowerment among black people. Unpublished MBA research thesis. Gordon institute of Business Science.

Mulkerji, P., & Albon, D. (2010). Research Method in Early childhood: An Introductory Guide Retrievedfrom http://www.sagepub.com/textbooks/Book233068#tabview=toc

National Housing Enterprise. 2008. Affirmative Action Report of 2008. Windhoek, 23 September.

Nel, P.S., Kirsten, M., Swanepoel, B.J., Erasmus, B.J., & Poisat, P. (2008). South African employment relations theory and practice. (6th edn.). Pretoria: Van Schaik.

Nelson, T.D., 2009. Handbook of prejudice, stereotyping, and discrimination. Psychology Press.

Nelson, R. E., & Gopalan, S. (2003). Do organizational cultures replicate national cultures? Isomorphism, rejection and reciprocal opposition in the corporate values of three countries. Organization studies, 24(7), 1115-1151.

© Eseigboria Grace Paula Ijasan, 2018

Ngambi, H. (2002). The role of emotional intelligence in transforming South African organisations. In Proceedings of the international and Management Sciences Conference (pp. 221-231).

Nkomo, S. M., & M., S. (2006). Diverse Identities. In S. A. Clegg, W. R. Nord, & S. Hardy (Eds.), Handbook of Organization Studies, (2 ed.). New York: Sage.

Norris, B.D. (2001) Transformation, diversity and organisational change within institutions of higher education. South African Journal of Education. 21(4); 219-222

Ntim, C. G. (2015). Board diversity and organizational valuation: unravelling the effects of ethnicity and gender. Journal of Management & Governance, 19(1), 167-195.

Ntim, C. G., & Soobaroyen, T. (2013). Black economic empowerment disclosures by South African listed corporations: The influence of ownership and board characteristics. Journal of business ethics, 116(1), 121-138.

Olsen, J. E., & Martins, L. L. (2012). Understanding organizational diversity management programs: A theoretical framework and directions for future research. Journal of organizational behavior, 33(8), 1168-1187.

Oosthuizen, R. M. & Naidoo, V. (2010). Attitudes towards and experience of employment equity. South African Journal of Industrial Psychology, 36 (1), 1-9

Op't Hoog, C., Siebers, H. and Linde, B. (2010). Affirmed identities? The experience of black middle managers dealing with affirmative action and equal opportunity policies at a South African mine. South African Journal of Labour Relations. 34 (2), 60-83.

Orgambídez-Ramos, A., & Borrego-Alés, Y. (2014). Empowering employees: Structural empowerment as antecedent of job satisfaction in university settings. Psychological Thought, 7(1), 28-36.

Osode, P. (2004). The new Broad-based Black Economic Empowerment Act: A Critical Evaluation. Speculum Juris, 107.

Pallant, J. (2011). SPSS Survival Manual. 4th Edition. Australlia. Allen & Unwin

Patel, L, 2005. Social Welfare and Social Development in South Africa. Oxford University Press, Cape Town

Patel, L., & Graham, L. (2012). How Broad-Based is Broad-Based Black Economic Empowerment? Development Southern Africa, 29(2), 193 - 207.

Pettigrew T. F. and Tropp. L. R (2008) How does intergroup contact reduce prejudice? Meta-analytic tests of three mediators. European Journal of Social Psychology. 38(6);922-934

Pietersen, C. (2007). Interpersonal bullying behaviours in the workplace. South African Journal of Industrial Psychology,33(1), 59−66.

Plummer, D. L. (2003). Overview of the Field of Diversity Management. In D. L. Plummer (Ed.), Handbook of Diversity Management: Beyond Awareness to Competency Based Learning (pp. pp. 1-50.). Lanham, MD: University Press of America Inc.

Podsiadlowski, A., Gröschke, D., Kogler, M., Springer, C., & van der Zee, K. (2013). Managing a Culturally Diverse Workforce: Diversity perspectives in organizations. International Journal of Intercultural Relations, 37(2), 159-175.

Polit, D. F., Beck, C. T., & Hungler, B. P. (2001). Essentials of Nursing Research: Methods, Appraisal, and Utilisation (5th ed.). Philadelphia: Lippincott.

© Eseigboria Grace Paula Ijasan, 2018

Ponte, S., Roberts, S., & Van Sittert, L. (2007). 'Black Economic Empowerment', Business and the State in South Africa. Development and Change, 38(5), 933-955.

Pratto, F and Stewart, A. L. (2011) Social Dominance Theory in Christie, D.J. ed., 2011. The encyclopedia of peace psychology (Vol. 1). John Wiley & Sons.

Pratto, F., Sidanius, J. and Levin, S., 2006. Social dominance theory and the dynamics of intergroup relations: Taking stock and looking forward. European review of social psychology, 17(1), pp.271-320

Priyameet Kaur Keer Anand (2014) Cross cultural diversity in today's globalized Era. Journal of Human Resource Management. Special Issue: International Human Resource Management. 2 (6-1); 12-16.

Quinn, R.E., Spreitzer, G.M. (1991). The psychometrics of the competing values culture instrument and an analysis of the impact of organizational culture on quality of life. In: Woodman, R. W. and Pasmore, W. A., editors. Research in organizational change and development. Greenwich, CT: JAI Press. pp. 155–142.

Ramgoolam, S. (2005). Experiences of employment equity in the coal mining industry. Unpublished master's dissertation, University of South Africa, Pretoria, Gauteng, South Africa.

Republic of South Africa. (1998). Employment Equity Act No. 55 of 1998. Government Gazette, 450 (22209)

Research Surveys (2004). [Online] Available at:< http://www.biz-community.com/PressOffice.aspx? i=275>Resource Management (Vol. 26, pp. 1-48). Greenwich, CT: JAI Press.

Richeson, J. A & Shelton, J. N (2007) Negotiating Interracial Interactions Costs, Consequences, and Possibilities Current Directions in Psychological Science, 16(6)

Rijamampianina, R., & Carmichael, T. (2005). A framework for effective cross-cultural coopetition between organisations. Problems and perspectives in Management, 4, 92-103.

Roberge, M. E., & Van Dick, R. (2010). Recognizing the benefits of diversity: When and how does diversity increase group performance. Human Resource Management Review (20), 295-308.

Rogers, L. O., & Meltzoff, A. N. (2017). Is gender more important and meaningful than race? An analysis of racial and gender identity among Black, White, and mixed-race children. Cultural Diversity and Ethnic Minority Psychology, 23(3), 323.

Rokeach, M. (1973). The Nature of Human Values. New York: The Free Pres

Roth, W. D., & Mehta, J. D. (2002). The Rashomon Effect Combining Positivist and Interpretivist Approaches in the Analysis of Contested Events. Sociological Methods & Research, 31(2), 131-173.

Rupp, D. E., Vodanovich, S. J., & Crede, M. (2006). Age bias in the workplace: the impact of ageism and causal attributions. Journal of Applied Social Psychology, 36, 1337-1364.

Sanchez, D. (2011). The Economic Empowerment of African Descendants; lessons from South Africa's Black Economic Empowerment Strategy. Sephis and Universidad de Cartagena conference on 'Equity, Justice, Development: People of African Descent in Latin America in Comparative Perspective'. Cartagena, March.

Sarantakos, S. (2005). Social Research (3rd ed.). London: Palgrave Macmillan.

© Eseigboria Grace Paula Ijasan, 2018

SATO, C. (2013). Black Economic Empowerment in the South African Agricultural Sector: A Case Study of the Wine Industry. Academic Research Repository at the Institute of Developing Economies, Japan (ARRIDE), 384(2). Retrieved from http://hdl.handle.net/2344/1210

Saunders, M., Lewis, P., & Thornhill, A. (2009). Research Methods for Business Students (fifth ed.). England: Pearson Education Limited.

Saunders, M., Lewis, P., & Thornhill, A. (2012). Research Methods for Business Students (Sixth ed.). England: Pearson Education Limited.

Schein, E. H. (1996). Culture: The missing Concept in Organization Studies. Administrative Science Quarterly, 41, 229–240.

Schein, E. H. (2004). Organizational Culture and Leadership. San Francisco, CA: Jossey-Bass.

Schulze, C. (2012). Submission on Broad-Based Black Economic Empowerment Act: BEE should be scrapped, not reformed - 4th December 2012. South African Institute of Race Relations.

Scimeca, L. (2008). Research Methodology and Design. University of South Africa, Unisa Institutional Repository (UnisaIR). (Chapter 4)

Seibert, S. E., Wang, G., & Courtright, S. H. (2011). Antecedents and consequences of psychological and team empowerment in organizations: a meta-analytic review. Journal of applied psychology, 96(5), 981.

Sherif, M. (2015). Group conflict and co-operation: Their social psychology (Vol. 29). Psychology Press.

Shezi, C. (2011). Demystifying Management: The Case of Black Managers in Durban, South Africa. Unpublished master's thesis in Business Administration. University of Kwazulu-Natal.

Shore, L. M., Chung-Herrera, B. G., Dean, M. A., Ehrhart, K. H., & Jung, D. I. (2009). Diversity in organizations: Where are we now and where are we going? Human Resource Management Review, 19, 117-133.

Sidanius, J. and Pratto, F., 2001. Social dominance: An intergroup theory of social hierarchy and oppression. Cambridge University Press.

Silverman, D. (2013). Doing Qualitative Research (K. Metzler Ed. 4th ed.). London, New Delhi, Singapore: Sage.

Simbanegavi, W., Greenberg, J. B., & Gwatidzo, T. (2014). Testing for competition in the South African banking sector. Journal of African Economies, 24(3), 303-324.

Simons, T. (2002). Behavioural integrity: The perceived alignment between managers' words and deeds as a research focus. Organization Science, 13(1), 18-35.

Singh, B., Winkel, D. E., & Selvarajan, T. T. (2013). Managing Diversity at Work: Does psychological safety hold the key to racial differences in employee performance? Journal of Occupational and Organizational Psychology, 86, 242–263.

Singh, V., & Point, S. (2006). (Re)presentations of gender and ethnicity in diversity statements on European company websites. Journal of Business Ethics, 68, 363−379.

Smit, N. (2013). The contribution of labour law and non-discrimination law to empowerment and social justice in an unequal society: A South African perspective, International Journal of Comparative Labour Law and Industrial Relations, 29 (4), pp. 375-390.

© Eseigboria Grace Paula Ijasan, 2018

South Africa. (2003). Broad-Based Black Economic Empowerment Act, Act No. 53 of 2003. Pretoria: Government Printer

Southall, R. (2006). Black empowerment and present limits to a more democratic capitalism in South Africa. State of the nation: South Africa 2005–2006.

Southall, R. (2007). Ten Propositions about Black Economic Empowerment in South Africa. Review of African Political Economy, 34(111), 64-84.

Southall, R. (2014) Rents, Violence and Access: BEE and South African Transition to Democracy; Available online: https://repository.up.ac.za/bitstream/handle/2263/44217/Tshetu_Analysis_2014.pdf?sequence=1.pdf (accessed 28 February. 2018)

Stander, M.W., & Rothmann, S. (2010). Psychological empowerment, job insecurity and employee engagement. SA Journal of Industrial Psychology/SA, 36(1),849 - 857

Statistics Solutions. (2013). Confirmatory Factor Analysis. Retrieved from http://www.statisticssolutions.com/academic-solutions/resources/directory-of-statistical-analyses/confirmatory-factor-analysis/

Steele, C. M., Spencer, S. J., & Aronson, J. (2002). Contending with group image: The psychology of stereotype and social identity threat. In Advances in experimental social psychology (Vol. 34, pp. 379-440). Academic Press.

Suderman, J. (2012). Using the Organizational Cultural Assessment (OCAI) as a Tool for New Team Development. Journal of Practical Consulting, 4(1), 52-58.

Tabachnick, B.G & Fidell, L.S. (2007). Using Multivariate Statistics (5th Edition). Boston: Pearson Education.

Tangri, R., & Southall, R. (2008). The Politics of Black Economic Empowerment in South Africa. Journal of Southern African Studies,34(3),699-716.

The Banking Association of South Africa (2017) THE BANKING ASSOCIATION SOUTH AFRICA SUBMISSION ON TRANSFORMATION IN THE FINANCIAL SECTOR Available from https://www.banking.org.za/docs/default-source/presentations/2017-03-10-submission-on-transformation-in-the-financial-sector.pdf?sfvrsn=2 accessed on 30th October 2018

Thomas, A. (2002). Employment equity in South Africa: Lessons from the global school. International Journal of Manpower, 23(3), 237−255.

Thomas, A., & Robertshaw, D. (1999). Achieving Employment Equity: A Guide to Effective Strategies: Developing the Fabric of Organizations.

Thomas, D. A., & Ely, R. J. (1996). Making Differences Matter: A new Paradigm for Managing Diversity. Harvard Business Review (2195). Available from: https://hbr.org/1996/09/making-differences-matter-a-new-paradigm-for-managing-diversity. Accessed on 20 April 2014

Thompson, B. (2004). Exploratory and Confirmatory Factor Analysis: Understanding concepts and applications. Washington, DC: American Psychological Association.

Tolmie, A., Muijs, D., & McAteer, E. (2011). Quantitative Method in Educational and Social Research using SPSS. England: Open University Press.

Triandis H. C. 1994. Culture and Social Behavior. New York: McGraw-Hill.330 pp.

Trochim, W. M. (2006). Qualitative measures. Research measures knowledge base, 361, 2-16.

© Eseigboria Grace Paula Ijasan, 2018

Tropp, L. R and Molina, L. E (2012) Intergroup processes: From Prejudice to Positive Relations Between Groups in Deaux, K. and Snyder, M. eds., 2012. The Oxford handbook of personality and social psychology. Oxford University Press.

Tucker, L. R., & Lewis, C. (1973). A reliability coefficient for maximum likelihood factor analysis. Psychometrika, 38, 1-10.

Turner, J. C., & Giles, H. (1981). Intergroup behaviour: Basil Blackwell.

Twala, C. (2014) The African National Congress (ANC) and the Cadre Deployment Policy in the Post-Apartheid South Africa: A Product of Democratic Centralisation or a Recipe for a Constitutional Crisis? Journal for Social Science, 41(2): 159-165

UNESCO. (2010). Working for UNESCO means. Retrieved from http://portal.unesco.org/en/ev.phpURL_ID=11707&URL_DO=DO_TOPIC&URL_SECTION=201.html

Uys, I. (2003). Diversity management: reasons and challenges. Politeia, 22 (3), 30-48

Van Knippenberg, D., De Dreu, C. K. W., & Homan, A. C. (2004). Work group diversity and group performance: An integrative model and research agenda. Journal of Applied Psychology, 8(9); 1008-1022

van Teijlingen, E. R., & Hundley, V. (Winter 2001). The Importance of pilot studies. Social Research Update.

Velliaris, D. M., & Pierce, J. M. (2017). Cultural diversity: Misconceptions, misinterpretations, and misunderstandings in the classroom. In Intercultural Responsiveness in the Second Language Learning Classroom (pp. 84-105). IGI Global.

Vermeulen, L.P., & Coetzee, M. (2006). Perceptions of the dimensions of the fairness of affirmative action: A pilot study. South African Journal of Business Management, 37(2), 53−65.

Vickerstaff S. (2010) 'Older workers: The 'unavoidable obligation' of extending our working lives?' Sociology Compass, 4 (10), 869-879

Virley, M., 2013. Social Dominance Theory: The Explanation behind Social Hierarchy and Oppression? Sociological Imagination: Western's Undergraduate Sociology Student Journal, 2(1), p.4.

Warne, R. T., & Larsen, R. (2014). Evaluating a proposed modification of the Guttman rule for determining the number of factors in an exploratory factor analysis. Psychological Test and Assessment Modeling, 56, 104-123.

Wessels, J. S. (2008). Transforming the public service to serve a diverse society: can representativeness be the most decisive criterion? Politeia, 27 (3), 21–36

Williams, B., Brown, T., & Onsman, A. (2010). Exploratory Factor analysis: A five-step guide for novices. Australasian Journal of Paramedicine, 8(3).

Williams, T.K., 2012. Understanding internalized oppression: A theoretical conceptualization of internalized subordination.

Wooten, L. (2008). Guest Editor's Note: Breaking Barriers in Organizations for the Purpose of Inclusiveness. Human Resource Management, 47(2), 191 - 197.www.joe.org/joe/2003april/a3.shtml.

© Eseigboria Grace Paula Ijasan, 2018

Yeung, A.K.O., Brockbank, J.W., Ulrich, D.O. (1991). Organizational Culture and human Resource Practices: An Empirical Assessment, in Woodman R.W., Pasmore, W.A. (eds.), Research in Organizational Change and Development, Vol.5, Greenwich, Conn., JAI Press.

Yin, R. K. (2009). Case study research: Design and Methods (4th ed. Vol. 5). California, New Delhi, London and Singapore: Sage Ltd.

Yin, R. K. (2011). Qualitative Research from start to finish. New YORK: The Guilford Press.

Yousef, D. A. (1998). Satisfaction with job security as a predictor of organizational commitment and job performance in a multicultural environment. International Journal of Manpower, 19 (3), 184-194

Yu, T., and Wu, N. (2009). A Review of Study on the Competing Values Framework. International Journal of Business and Management. 4(2), 37-42.

Zammuto, R.F., Krakower, J.Y. (1991). Quantitative and qualitative studies of organizational culture. In: Woodman, R. W. and Pasmore, W. A., editors. Research in organizational change and development. Greenwich, CT: JAI Press. pp. 155–142.

Zulu, P.S., and Parumasur, S.B. (2009). Employee perceptions of the management of cultural diversity and workplace transformation. SA Journal of Industrial Psychology, 35(1), Art. #426, 9 pages.

© Eseigboria Grace Paula Ijasan, 2018

Appendices

Appendix 1: Questionnaire

Fostering Diversity Survey

Start of Block: Default Question Block

Q1 Informed Consent Form **Why have I been invited to participate?** You have been chosen because your opinion and personal experience is greatly valued and might help shape the ultimate outcome of this research. This survey will take 8-10 mins of your time. **Do I have to take part?** 'Participation is voluntary. If you do decide to take part, please simply fill in the questionnaire. If you decide to take part, you are still free to withdraw at any time and without giving a reason.

What are the possible benefits of taking part? There is no direct benefit to the participant. However, the outcomes from this research will serve as a platform for an appraisal of the Act as well as expand the scope for the justification for the business case of diversity management. This will go a long way in benefiting employees, organisations and the South African economy at large.

If you have questions about this research, concerns or contribution, you may contact Ese Ijasan (PhD candidate) Wits Business school by emailing 920960@students.wits.as.za or gracepaula22@yahoo.com cell: +27 619904677 or Christoph Maier (Supervisor). Christoph.Maier@wits.ac.za or christoph.maier@comazo.de, Tel: +27 11 447 5869

Q2 **Informed Consent** I have read and understood the consent form and happy to participate in this study.

- ○ Yes (1)
- ○ No (2)

Skip To: End of Survey If Informed Consent I have read and understood the consent form and happy to participate in this s... = No

Page Break

© Eseigboria Grace Paula Ijasan, 2018

Q3
Thank you for choosing to continue with the survey.

Section 1: General Profile
This section aims to get information about yourself.

Select your current designation

- ○ Middle level management (3)
- ○ Lower level management (4)
- ○ Nonmanagerial (5)

Q5 Years of relevant work experience

- ○ 0-3 (1)
- ○ 4-9 (2)
- ○ 10 and Above (3)

Q6 Number of years in current company

- ○ 0-3 (1)
- ○ 4-9 (2)
- ○ 10 and Above (3)

© Eseigboria Grace Paula Ijasan, 2018

Q7 Gender

- ○ Male (1)
- ○ Female (2)

Q8 Race

- ○ Black (1)
- ○ White (2)
- ○ Indian (3)
- ○ Coloured (or Asian) (4)

Q9 Select the sector that applies to your company

- ○ Insurance (3)
- ○ Banks (5)
- ○ Financial Services (6)

Page Break

© Eseigboria Grace Paula Ijasan, 2018

Q11 **Section 2: Organisational Culture Assessment**
This section aims to assess the six key dimensions of organisational culture. The four questions in each sub sections have four alternatives each. On a scale of 1 - 7 (1 being the least representative and 7 being the most representative), give the highest number of points to the alternative that is most similar to your organisation.

For example, in question one, if you think alternative A is very similar to your organisation, alternative B and C are somewhat similar and alternative D is the least similar, you give
7 points to A,
4 points to B and C, and
1 points to D.

Note: 'Now' refers to the culture as it exists today, while the "Preferred" column refers to how you would like the organisation to look like in five years

© Eseigboria Grace Paula Ijasan, 2018

Q11A **Dominant Characteristics**

	Now (1)	Preferred (2)
My organisation is a very personal place. People share a lot of themselves (1)		
My organisation is a very dynamic entrepreneurial place. People are willing to take risks (2)		
My organisation is very result oriented. People are very competitive and achievement oriented. (3)		
My organisation is a very controlled and structured place. Formal procedures govern what people do (4)		

© Eseigboria Grace Paula Ijasan, 2018

Q11B **Organisational Leadership**

	Now (1)	Preferred (2)
The leadership here is generally considered to exemplify mentoring, facilitating, or nurturing (1)		
The leadership here is generally considered to exemplify entrepreneurship, innovating, or risk taking (2)		
The leadership here is generally considered to exemplify a no-nonsense, aggressive, result focused (3)		
The leadership here is generally considered to exemplify, coordinating, organizing, process efficiency (4)		

© Eseigboria Grace Paula Ijasan, 2018

Q11C **Management of Employees**

	Now (1)	Preferred (2)
Management style here is characterized by teamwork, consensus and or participation (1)		
Management style here is characterized by individual risk-taking, innovation, freedom and or uniqueness. (2)		
Management style here is characterized by hard driving competitiveness, high demands and achievement. (3)		
Management style here is characterized by security of employment, conformity, predictability and or stability in relationships. (4)		

Page Break

© Eseigboria Grace Paula Ijasan, 2018

Q11D **Organisation Glue**

	Now (1)	Preferred (2)
The glue that holds my organisation together is loyalty or mutual trust. (1)		
The glue that holds my organisation together is commitment to innovation and development. (2)		
The glue that holds my organisation together is the emphasis on achievement and goal accomplishment. (3)		
The glue that holds my organisation together is formal rules and policies. (4)		

© Eseigboria Grace Paula Ijasan, 2018

Q11E **Strategic Emphases**

	Now (1)	Preferred (2)
My organisation emphasizes on human development. High trust, openness and or participation persist. (1)		
My organisation emphasizes on acquiring new resources and creating new challenges (2)		
My organisation emphasizes on competitive actions and achievement. gaining market place dominance (3)		
My organisation emphasizes on permanence and stability. Efficiency, control and smooth operation is key. (4)		

© Eseigboria Grace Paula Ijasan, 2018

Q11F **Criteria of Success**

	Now (1)	Preferred (2)
Success here is defined on the basis of development of human resources, teamwork, employee commitment and concern for people. (1)		
Success here is defined on the basis of having the most unique or newest product (2)		
Success here is defined on the basis of winning in the market and outpacing competition. (3)		
Success here is defined on the basis of efficiency. dependable delivery, smooth scheduling and low cost production are crucial. (4)		

Page Break

© Eseigboria Grace Paula Ijasan, 2018

Q13 **Section 3: Psychological Empowerment** Please click the option that best applies to you. *Strongly agree* being the best and *Strongly disagree* the least.

© Eseigboria Grace Paula Ijasan, 2018

	Strongly disagree (11)	Disagree (12)	Somewhat disagree (13)	Neither agree nor disagree (14)	Somewhat agree (15)	Agree (16)	Strongly agree (17)
I am confident about my ability to do my job. (1)	○	○	○	○	○	○	○
The work that I do is important to me. (2)	○	○	○	○	○	○	○
I have significant autonomy in determining how I do my job. (3)	○	○	○	○	○	○	○
My impact on what happens in my department is significant. (4)	○	○	○	○	○	○	○
My job activities are personally meaningful to me. (5)	○	○	○	○	○	○	○
I can decide on my own how to go about doing my own work. (7)	○	○	○	○	○	○	○
I really care about what I do on my job. (8)	○	○	○	○	○	○	○
My job is well within the scope of my abilities. (9)	○	○	○	○	○	○	○

© Eseigboria Grace Paula Ijasan, 2018

I have considerable opportunity for independence and freedom on how I do my job. (10)	○	○	○	○	○	○	○
I am encouraged to express ideas/suggestions (11)	○	○	○	○	○	○	○
My suggestions are used to make decisions that affect me and my team (12)	○	○	○	○	○	○	○
My ideas are considered even when management disagrees with them. (13)	○	○	○	○	○	○	○
Company decisions are explained to me (14)	○	○	○	○	○	○	○
I am told how my work fits into the company (15)	○	○	○	○	○	○	○
I am shown genuine concern for my individual success (17)	○	○	○	○	○	○	○
Attention is given to my concerns and discussed patiently (18)	○	○	○	○	○	○	○

© Eseigboria Grace Paula Ijasan, 2018

I am shown areas which need more training (19)	○	○	○	○	○	○	○
I am provided with the assistance needed to solve problems on my own (20)	○	○	○	○	○	○	○
I am encouraged to solve problems with my team (21)	○	○	○	○	○	○	○

Page Break

© Eseigboria Grace Paula Ijasan, 2018

Q14 **Section 4: Social perceptions of Workplace Diversity in your organisation.**

With the implementation of BEE

	Strongly disagree (8)	Disagree (9)	Somewhat disagree (10)	Neither agree nor disagree (11)	Somewhat agree (12)	Agree (13)	Strongly agree (14)
People now see members as equals (1)	○	○	○	○	○	○	○
People see each other beyond physical characteristics (2)	○	○	○	○	○	○	○
People have better relationship with others (3)	○	○	○	○	○	○	○
People see each other as an asset and not a liability (4)	○	○	○	○	○	○	○
People are more confident about being treated fairly (5)	○	○	○	○	○	○	○
People see a clear progression in their career (6)	○	○	○	○	○	○	○

End of Block: Default Question Block

© Eseigboria Grace Paula Ijasan, 2018

Appendix 2: Consent Documents

Apendix 2.1 Consent/ participant information sheet

CONSENT/ PARTICIPANT INFORMATION SHEET (PILOT STUDY)

Study Title: Fostering Diversity through the South African Broad Based Black Economic Empowerment Act

Invitation paragraph

'You are being invited to take part in a pilot PhD research study. Before you decide whether or not to take part, it is important for you to understand why the research is being done and what it will involve. Please take time to read the following information.

What is the purpose of the study?

This research is informed on the grounds that there is limited study assessing the contribution of the Broad Based Black Economic Empowerment (BBBEE) Act to fostering diversity within organisations. This has led to the intense scrutiny of the Act and its objective in depolarizing the South African society. As a result of this, this research aims to explore how far implementation of BBBEE foster diversity and also provide a guideline that will enhance the effective implementation of the Act with regards to fostering diversity.

To achieve this aim, the research will have to send out survey to business owners, human resource managers and line managers of BEE rated companies.

Why have I been invited to participate?

To get a very wide view of the nature of the problem at hand so as to propose a broad scoping solution, there is a need for this questionnaire which you have been sent. Hence the reason why you have been chosen is because your opinion and personal experience is greatly valued and might help shape the ultimate outcome of this research.

Do I have to take part?

'It is up to you to decide whether or not to take part. If you do decide to take part, please simply fill in the questionnaire. Consent is assumed upon completion of questionnaire. If you decide to take part you are still free to withdraw at any time and without giving a reason'.

© Eseigboria Grace Paula Ijasan, 2018

What will happen to me if I take part?

This questionnaire is simply asking you to answer the following questions; it should not take more than 5-10 minutes of your time and the answers you give are completely anonymized.

What are the possible disadvantages and risks of taking part?

This survey should not cost you anything more than the time to fill it as it is an online survey. It poses no disadvantages to you.

What are the possible benefits of taking part?

The benefits of this study are many, some of them are that the results will further our understanding of the BBBEE Act with regards to fostering diversity. The outcomes will serve as a platform for an appraisal of the Act as well as expand the scope for the justification for the business case of diversity management. This will go a long way in benefitting employees, organisations and the South African economy at large.

Will what I say in this study be kept confidential?

The data collected will be treated with strict confidentiality. Personal information which is your email address will be scrubbed off during data analysis. All data collected will also be destroyed after the final results of the research has been approved and published.

What should I do if I want to take part?

To take part, all you have to do is to fill in the questionnaire and submit.

What will happen to the results of the research study?

The results of this survey will be used for my PhD thesis and they will be published. A copy of the published thesis will be available at appropriate University of the Witwatersrand libraries.

Thanks for taking time to read this information and filling the attached questionnaire.

Contacts for Further Information:

Ese Ijasan
PhD Candidate,
Wits Business School,
gracepaula22@yahoo.com
Tel: +2761 990 4677

Dr Christoph Maier
Supervisor,
Wits Business School,
christoph.maier@comazo.de
Tel: +27 11 447 5869

© Eseigboria Grace Paula Ijasan, 2018

CONSENT/ PARTICIPANT INFORMATION SHEET

Study Title: Fostering Diversity through the South African Broad Based Black Economic Empowerment Act

Invitation paragraph

'You are being invited to take part in a PhD research study. Before you decide whether or not to take part, it is important for you to understand why the research is being done and what it will involve. Please take time to read the following information.

What is the purpose of the study?

This research is informed on the grounds that there is limited study assessing the contribution of the Broad Based Black Economic Empowerment (BBBEE) Act to fostering diversity within organisations. This has led to the intense scrutiny of the Act and its objective in depolarizing the South African society. As a result of this, this research aims to explore how far implementation of BBBEE foster diversity and also provide a guideline that will enhance the effective implementation of the Act with regards to fostering diversity.

To achieve this aim, the research will have to send out survey to business owners, human resource managers and line managers of BEE rated companies.

Why have I been invited to participate?

To get a very wide view of the nature of the problem at hand so as to propose a broad scoping solution, there is a need for this questionnaire which you have been sent. Hence the reason why you have been chosen is because your opinion and personal experience is greatly valued and might help shape the ultimate outcome of this research.

Do I have to take part?

'It is up to you to decide whether or not to take part. If you do decide to take part, please simply fill in the questionnaire. Consent is assumed upon completion of questionnaire. If you decide to take part you are still free to withdraw at any time and without giving a reason'.

What will happen to me if I take part?

This questionnaire is simply asking you to answer the following questions; it should not take more than 5-10 minutes of your time and the answers you give are completely anonymised.

© Eseigboria Grace Paula Ijasan, 2018

What are the possible disadvantages and risks of taking part?

This survey should not cost you anything more than the time to fill it as it is an online survey. It poses no disadvantages to you.

What are the possible benefits of taking part?

The benefits of this study are many, some of them are that the results will further our understanding of the BBBEE Act with regards to fostering diversity. The outcomes will serve as a platform for an appraisal of the Act as well as expand the scope for the justification for the business case of diversity management. This will go a long way in benefitting employees, organisations and the South African economy at large.

Will what I say in this study be kept confidential?

The data collected will be treated with strict confidentiality. Personal information which is your email address will be scrubbed off during data analysis. All data collected will also be destroyed after the final results of the research has been approved and published.

What should I do if I want to take part?

To take part, all you have to do is to fill in the questionnaire and submit.

What will happen to the results of the research study?

The results of this survey will be used for my PhD thesis and they will be published. A copy of the published thesis will be available at appropriate University of the Witwatersrand libraries.

Thanks for taking time to read this information and filling the attached questionnaire.

Contacts for Further Information:

Ese Ijasan
PhD Candidate,
Wits Business School,
gracepaula22@yahoo.com
christoph.maier@comazo.de
Tel: +2761 990 4677

Dr Christoph Maier
Supervisor,
Wits Business School,
Tel: +27 11 447 5869

© Eseigboria Grace Paula Ijasan, 2018

Appendix 2.2: Sample letter of introduction

The Graduate School of Business Administration

2 St David's Place, Parktown,
Johannesburg, 2193,
South Africa
PO Box 98, WITS, 2050
Telephone: +27 11 717 3621
Website: www.wbs.ac.za

[redacted]
Marketing and Communication
[redacted]
South Africa

30 June 2017

PHD research by Ese Grace Ijasan from the Wits Business School

Dear Sirs,

Ese Grace Ijasan is a PhD candidate at the Wits Business School, University of the Witwatersrand, Johannesburg. Her doctoral research has the working title "Fostering diversity through the South African Broad Based Economic Empowerment Act in the Financial Sector".

Ese has completed 2 years of extensive and intensive literature review and is now in the final stages of her research collecting empirical data from listed South African financial institutions. To complete her research, she now needs to collect empirical data.

As her doctoral supervisor and representative of the Wits Business School I would like to implore you to provide her with the support she needs to achieve this. The empirical data collection is the last missing puzzle piece in a very solid academic study. It is not easy though as there are 9 companies involved and 270 questionnaires requested.

Essentially, however, she simply needs 30 middle managers from your organisation to answer a rather short questionnaire anonymously. The questionnaire is administered by Veronica Martin from BC Research and her team who has agreed to do this on a cost-only basis to help the student.

The empirical data collected will be used for the sole purpose of the doctoral research and will be used statistically to correlate diversity management with Broad Based Black Economic Empowerment in order to see the relationship between these constructs in the financial industry. The data collected will be from ABSA, Alexander Forbes, Capitec, Coronation Fund, Discovery, Investec, Liberty Life, Santam. Data from Standard Bank has already been collected. We hope that the results of the academic study will contribute to a more solid and informed debate on the issues.

I would be very grateful if you could help the student by supporting this research. The time and personnel requested is minimal. We ensure the appropriate ethical standards

© Eseigboria Grace Paula Ijasan, 2018

and anonymity/confidentiality. Please feel free to contact me anytime should you require further information.

Yours sincerely,

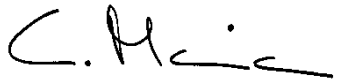

Dr. Christoph Maier
Senior Lecturer (Leading Diversity)
Wits Business School
Faculty of Commerce, Law and Management
University of the Witwatersrand
2 St David's Place, Parktown
Johannesburg 2050 South Africa
Email: christoph.maier@comazo.de
Tel: +27 82 4675096

© Eseigboria Grace Paula Ijasan, 2018

Appendix 3: Data analysis

EFA and Reliability for OCAI
ADDRESSING OCAI NOW
Factor Analysis

```
[DataSet5] C:\Users\LOBUS\Desktop\Kola Wife\Ese Ijasan 2017\Ese Ijasan (208
file).sav
```

Table A1

KMO and Bartlett's Test

Kaiser-Meyer-Olkin Measure of Sampling Adequacy.		.955
Bartlett's Test of Sphericity	Approx. Chi-Square	3952.630
	df	276
	Sig.	.000

Table A2

Communalities

	Initial	Extraction
Q2aN_1 The organisation is a very personal place. People share a lot of themselves - NOW	1.000	.650
Q2aN_2 The organisation is a very dynamic entrepreneurial place. People are willing to take risks - NOW	1.000	.650
Q2aN_3 The organisation is very result oriented. People are very competitive and achievement orientated. - NOW	1.000	.670
Q2aN_4 The organisation is a very controlled and structured place. Formal procedures govern what people do - NOW	1.000	.664
Q2bN_1 The leadership here is generally considered to exemplify mentoring, facilitating, or nurturing - NOW	1.000	.590
Q2bN_2 The leadership here is generally considered to exemplify entrepreneurship, innovating, or risk taking - NOW	1.000	.666
Q2bN_3 The leadership here is generally considered to exemplify a no-nonsense, aggressive, result focused - NOW	1.000	.559
Q2bN_4 The leadership here is generally considered to exemplify, coordinating, organising, process efficiency - NOW	1.000	.592
Q2cN_1 Management style here is characterised by teamwork, consensus and participation - NOW	1.000	.568
Q2cN_2 Management style here is characterised by individual risk taking, innovation, freedom and or uniqueness. - NOW	1.000	.605
Q2cN_3 Management style here is characterised by hard driving competitiveness, high demands and achievement. - NOW	1.000	.678
Q2cN_4 Management style here is characterised by security of employment, conformity, predictability and or stability in relationships. - NOW	1.000	.571
Q2dN_1 The glue that holds the organisation together is loyalty or mutual trust. - NOW	1.000	.596
Q2dN_2 The glue that holds the organisation together is commitment to innovation and development. - NOW	1.000	.543

© Eseigboria Grace Paula Ijasan, 2018

Q2dN_3 The glue that holds the organisation together is the emphasis on achievement and goal accomplishment. - NOW	1.00	.484
Q2dN_4 The glue that holds the organisation together is formal rules and policies. - NOW	1.00	.510
Q2eN_1 The organisation emphasises on human development. High trust, openness and or participation persist. - NOW	1.00	.569
Q2eN_2 The organisation emphasises on acquiring new resources and creating new challenges - NOW	1.00	.600
Q2eN_3 The organisation emphasises on competitive actions and achievement. Gaining market place dominance - NOW	1.00	.593
Q2eN_4 The organisation emphasises on permanence and stability. Efficiency, control and smooth operation is key. - NOW	1.00	.605
Q2fN_1 Success is defined on the basis of development of human resources, teamwork, employee commitment and concern for people. - NOW	1.00	.569
Q2fN_2 Success is defined on the basis of having the most unique or newest product - NOW	1.00	.614
Q2fN_3 Success is defined on the basis of winning in the market and outpacing competition. – NOW	1.00	.542
Q2fN_4 Success is defined on the basis of efficiency. dependable delivery, smooth scheduling and low cost production are crucial. - NOW	1.00	.629

Extraction Method: Principal Component Analysis.

Table A3

Total Variance Explained

Component	Initial Eigenvalues			Extraction Sums of Squared Loadings		
	Total	% of Variance	Cumulative %	Total	% of Variance	Cumulative %
1	11.824	49.267	49.267	11.824	49.267	49.267
2	1.293	5.387	54.654	1.293	5.387	54.654
3	1.200	5.000	59.654	1.200	5.000	59.654
4	.873	3.639	63.293			
5	.855	3.564	66.857			
6	.736	3.067	69.924			
7	.727	3.030	72.954			
8	.626	2.608	75.561			
9	.551	2.296	77.857			
10	.524	2.184	80.041			
11	.483	2.011	82.052			
12	.464	1.934	83.987			
13	.438	1.824	85.810			
14	.403	1.681	87.491			
15	.385	1.603	89.094			
16	.379	1.578	90.673			
17	.349	1.453	92.125			
18	.336	1.400	93.525			
19	.322	1.342	94.867			
20	.282	1.177	96.044			
21	.275	1.145	97.189			
22	.250	1.041	98.229			
23	.215	.895	99.124			
24	.210	.876	100.000			

Extraction Method: Principal Component Analysis.

© Eseigboria Grace Paula Ijasan, 2018

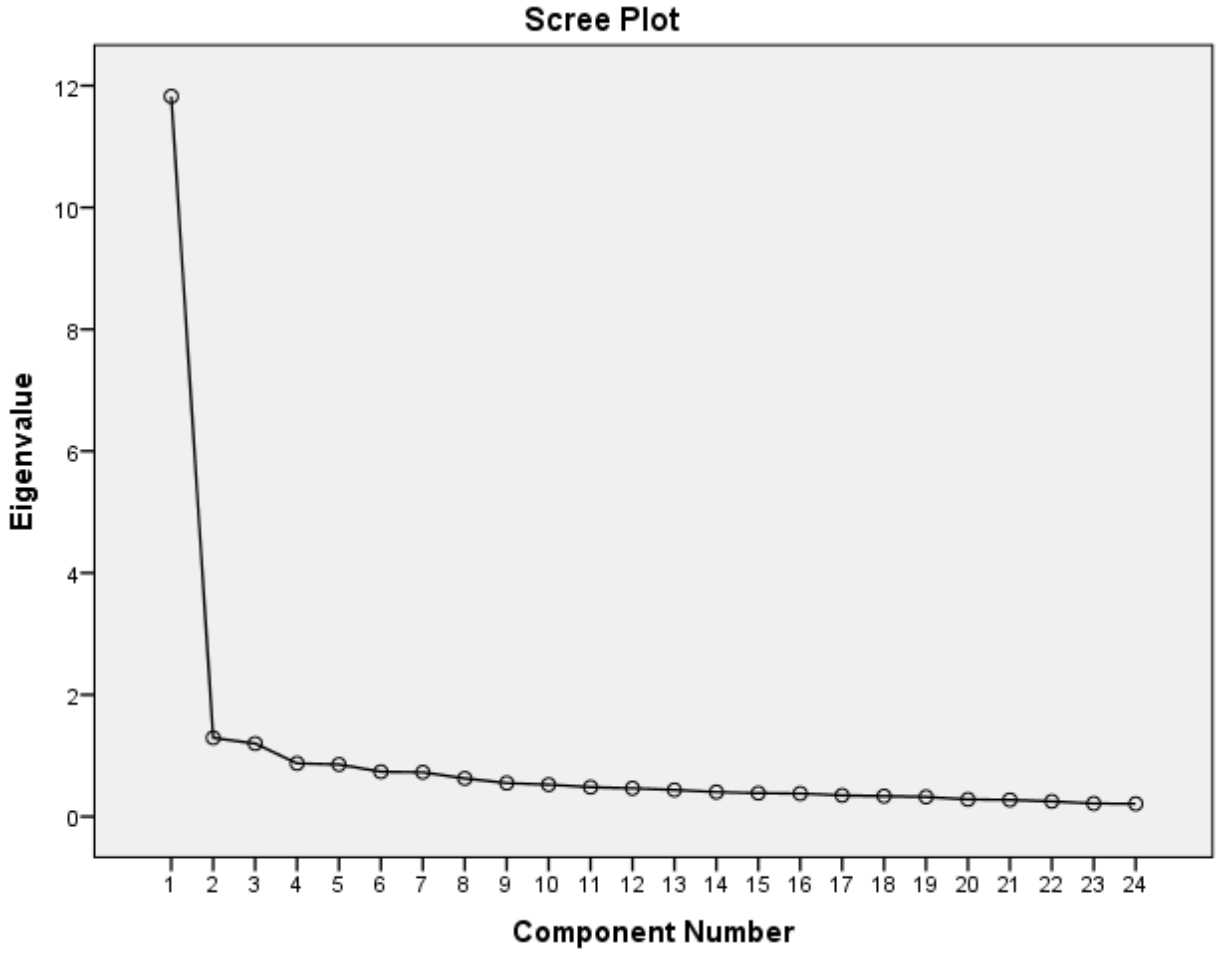

Table A4

Component Matrix[a]

	Component		
	1	2	3
Q2cN_3 Management style here is characterised by hard driving competitiveness, high demands and achievement. - NOW	.775		
Q2aN_3 The organisation is very result oriented. People are very competitive and achievement orientated. - NOW	.773		
Q2aN_1 The organisation is a very personal place. People share a lot of themselves - NOW	.773		
Q2cN_4 Management style here is characterised by security of employment, conformity, predictability and or stability in relationships. - NOW	.746		
Q2bN_2 The leadership here is generally considered to exemplify entrepreneurship, innovating, or risk taking - NOW	.745		
Q2aN_2 The organisation is a very dynamic entrepreneurial place. People are willing to take risks - NOW	.743		
Q2dN_1 The glue that holds the organisation together is loyalty or mutual trust. - NOW	.739		

© Eseigboria Grace Paula Ijasan, 2018

Q2cN_1 Management style here is characterised by teamwork, consensus and participation - NOW	.735		
Q2aN_4 The organisation is a very controlled and structured place. Formal procedures govern what people do - NOW	.715		.358
Q2bN_1 The leadership here is generally considered to exemplify mentoring, facilitating, or nurturing - NOW	.709		
Q2eN_1 The organisation emphasises on human development. High trust, openness and or participation persist. - NOW	.702		
Q2eN_2 The organisation emphasises on acquiring new resources and creating new challenges - NOW	.697		-.303
Q2dN_2 The glue that holds the organisation together is commitment to innovation and development. - NOW	.697		
Q2eN_3 The organisation emphasises on competitive actions and achievement. Gaining market place dominance - NOW	.695		
Q2bN_3 The leadership here is generally considered to exemplify a no-nonsense, aggressive, result focused - NOW	.687		
Q2dN_3 The glue that holds the organisation together is the emphasis on achievement and goal accomplishment. - NOW	.685		
Q2fN_1 Success is defined on the basis of development of human resources, teamwork, employee commitment and concern for people. - NOW	.684	.304	
Q2bN_4 The leadership here is generally considered to exemplify, coordinating, organising, process efficiency - NOW	.683		.350
Q2cN_2 Management style here is characterised by individual risk taking, innovation, freedom and or uniqueness. - NOW	.677		.383
Q2eN_4 The organisation emphasises on permanence and stability. Efficiency, control and smooth operation is key. - NOW	.674		
Q2dN_4 The glue that holds the organisation together is formal rules and policies. - NOW	.658		
Q2fN_2 Success is defined on the basis of having the most unique or newest product - NOW	.637	.419	
Q2fN_3 Success is defined on the basis of winning in the market and outpacing competition. - NOW	.626	.354	
Q2fN_4 Success is defined on the basis of efficiency. dependable delivery, smooth scheduling and low cost production are crucial. - NOW	.546	.484	.312

Extraction Method: Principal Component Analysis.
a. 3 components extracted.

Pattern Matrix[a]

a. Rotation failed to converge in 25 iterations. (Convergence = .000).

FACTOR

© Eseigboria Grace Paula Ijasan, 2018

```
  /VARIABLES Q2aN_1 Q2aN_2 Q2aN_3 Q2aN_4 Q2bN_1 Q2bN_2 Q2bN_3 Q2bN_4 Q2cN_1
Q2cN_2 Q2cN_3 Q2cN_4 Q2dN_1 Q2dN_2 Q2dN_3 Q2dN_4 Q2eN_1 Q2eN_2 Q2eN_3
Q2eN_4 Q2fN_1 Q2fN_2 Q2fN_3 Q2fN_4
  /MISSING LISTWISE
  /ANALYSIS Q2aN_1 Q2aN_2 Q2aN_3 Q2aN_4 Q2bN_1 Q2bN_2 Q2bN_3 Q2bN_4 Q2cN_1
Q2cN_2 Q2cN_3 Q2cN_4 Q2dN_1 Q2dN_2 Q2dN_3 Q2dN_4 Q2eN_1 Q2eN_2 Q2eN_3
Q2eN_4 Q2fN_1 Q2fN_2 Q2fN_3 Q2fN_4
  /PRINT INITIAL EXTRACTION ROTATION
  /FORMAT SORT BLANK(.40)
  /PLOT EIGEN
  /CRITERIA FACTORS(4) ITERATE(25)
  /EXTRACTION ML
  /CRITERIA ITERATE(25)
  /ROTATION VARIMAX.
```

Factor Analysis

```
[DataSet1] C:\Users\LOBUS\Desktop\Ese Ijasan (208 file) OCTOBER 2017
USING.sav
```

Table A5

Communalities

	Initial	Extraction
Q2aN_1 The organisation is a very personal place. People share a lot of themselves - NOW	.649	.667
Q2aN_2 The organisation is a very dynamic entrepreneurial place. People are willing to take risks - NOW	.643	.702
Q2aN_3 The organisation is very result oriented. People are very competitive and achievement orientated. - NOW	.645	.645
Q2aN_4 The organisation is a very controlled and structured place. Formal procedures govern what people do - NOW	.609	.610
Q2bN_1 The leadership here is generally considered to exemplify mentoring, facilitating, or nurturing - NOW	.566	.553
Q2bN_2 The leadership here is generally considered to exemplify entrepreneurship, innovating, or risk taking - NOW	.627	.603
Q2bN_3 The leadership here is generally considered to exemplify a no-nonsense, aggressive, result focused - NOW	.538	.484
Q2bN_4 The leadership here is generally considered to exemplify, coordinating, organising, process efficiency - NOW	.528	.511
Q2cN_1 Management style here is characterised by teamwork, consesus and participation - NOW	.579	.584
Q2cN_2 Management style here is characterised by individual risk taking, innovation, freedom and or uniqueness. - NOW	.547	.554
Q2cN_3 Management style here is characterised by hard driving competitiveness, high demands and achievement. - NOW	.630	.645
Q2cN_4 Management style here is characterised by security of employment, conformity, predictability and or stability in relationships. - NOW	.583	.547

© Eseigboria Grace Paula Ijasan, 2018

Q2dN_1 The glue that holds the organisation together is loyalty or mutual trust. - NOW	.590	.575
Q2dN_2 The glue that holds the organisation together is commitment to innovation and development. - NOW	.559	.551
Q2dN_3 The glue that holds the organisation together is the emphasis on achievement and goal accomplishment. - NOW	.551	.447
Q2dN_4 The glue that holds the organisation together is formal rules and policies. - NOW	.527	.449
Q2eN_1 The organisation emphasises on human development. High trust, openness and o r participation persist. - NOW	.553	.515
Q2eN_2 The organisation emphasises on acquiring new resources and creating new challenges - NOW	.543	.571
Q2eN_3 The organisation emphasises on competitive actions and achievement. Gaining market place dominance - NOW	.541	.605
Q2eN_4 The organisation emphasises on permanence and stability. Efficiency, control and smooth operation is key. - NOW	.542	.621
Q2fN_1 Success is defined on the basis of development of human resources, teamwork, employee commitment and concern for people. - NOW	.568	.592
Q2fN_2 Success is defined on the basis of having the most unique or newest product - NOW	.509	.548
Q2fN_3 Success is defined on the basis of winning in the market and outpacing competitio n. - NOW	.481	.429
Q2fN_4 Success is defined on the basis of efficiency. dependable delivery, smooth sched uling and low cost production are crucial. - NOW	.432	.419

Extraction Method: Maximum Likelihood.

Table a6

Total Variance Explained

Factor	Initial Eigenvalues			Extraction Sums of Squared Loadings			Rotation Sums of Squared Loadings		
	Total	% of Variance	Cumulative %	Total	% of Variance	Cumulative %	Total	% of Variance	Cumulative %
1	11.824	49.267	49.267	11.382	47.425	47.425	4.803	20.014	20.014
2	1.293	5.387	54.654	.843	3.513	50.939	3.698	15.409	35.423
3	1.200	5.000	59.654	.758	3.159	54.097	2.852	11.885	47.307
4	.873	3.639	63.293	.446	1.858	55.955	2.075	8.647	55.955
5	.855	3.564	66.857						
6	.736	3.067	69.924						
7	.727	3.030	72.954						
8	.626	2.608	75.561						
9	.551	2.296	77.857						
10	.524	2.184	80.041						
11	.483	2.011	82.052						

© Eseigboria Grace Paula Ijasan, 2018

12	.464	1.934	83.987
13	.438	1.824	85.810
14	.403	1.681	87.491
15	.385	1.603	89.094
16	.379	1.578	90.673
17	.349	1.453	92.125
18	.336	1.400	93.525
19	.322	1.342	94.867
20	.282	1.177	96.044
21	.275	1.145	97.189
22	.250	1.041	98.229
23	.215	.895	99.124
24	.210	.876	100.000

Extraction Method: Maximum Likelihood.

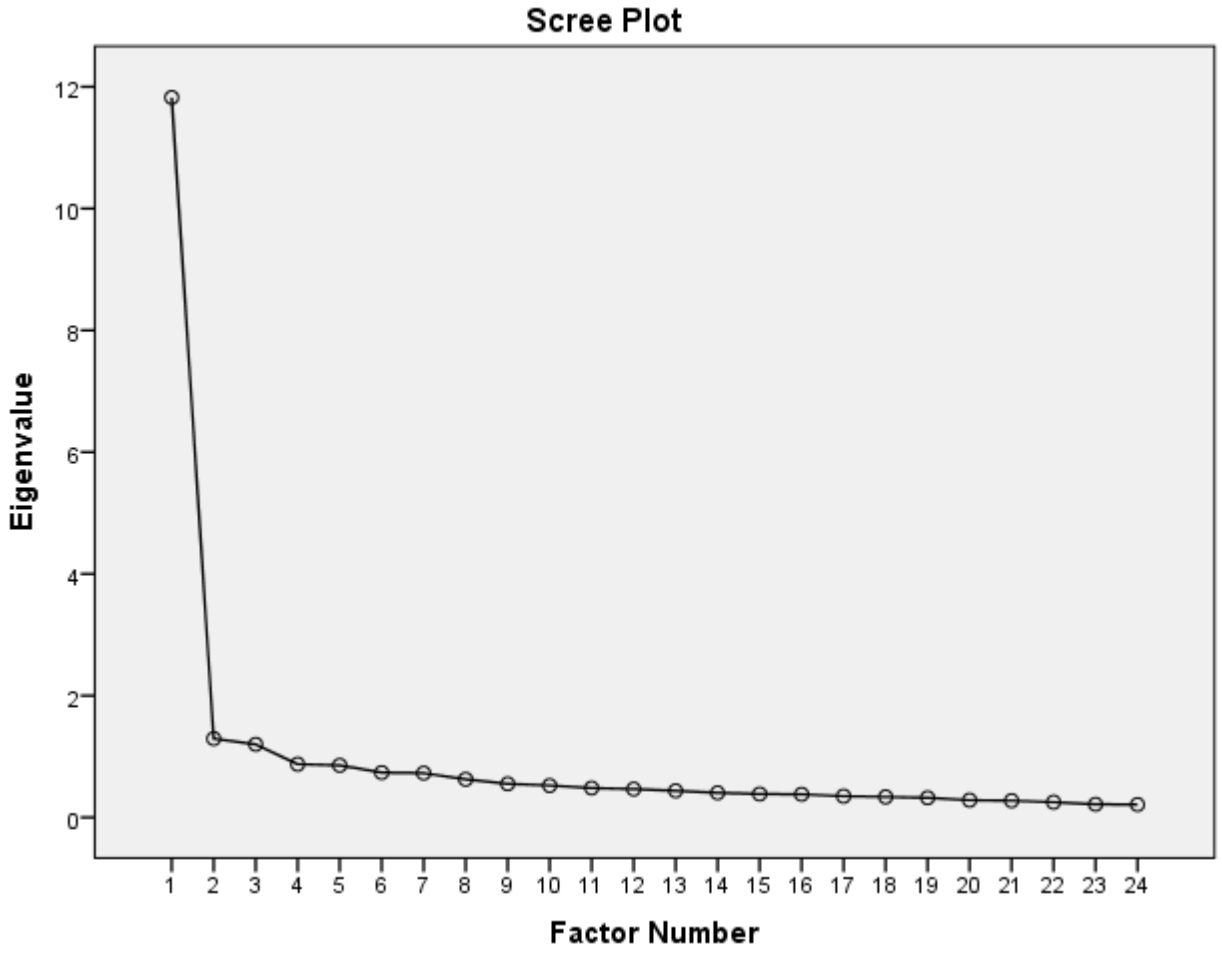

Table a7

Factor Matrix[a]

	Factor			
	1	2	3	4
Q2aN_1 The organisation is a very personal place. People share a lot of themselves - NOW	.774			
Q2aN_3 The organisation is very result oriented. People are very competitive and achievement orientated. - NOW	.770			

© Eseigboria Grace Paula Ijasan, 2018

Q2cN_3 Management style here is characterised by hard driving competitiveness, high demands and achievement. - NOW	.767
Q2aN_2 The organisation is a very dynamic entrepreneurial place. People are willing to take risks – NOW	.750
Q2bN_2 The leadership here is generally considered to exemplify entrepreneurship, innovating, or risk taking - NOW	.735
Q2cN_4 Management style here is characterised by security of employment, conformity, predictability and or stability in relationships. - NOW	.734
Q2dN_1 The glue that holds the organisation together is loyalty or mutual trust. - NOW	.726
Q2cN_1 Management style here is characterised by teamwork, consesus and participation - NOW	.724
Q2aN_4 The organisation is a very controlled and structured place. Formal procedures gover n what people do - NOW	.708
Q2bN_1 The leadership here is generally considered to exemplify mentoring, facilitating, or nurturing - NOW	.697
Q2eN_2 The organisation emphasises on acquiring new resources and creating new challenges – NOW	.685
Q2eN_1 The organisation emphasises on human development. High trust, openness and or participation persist. - NOW	.684
Q2eN_3 The organisation emphasises on competitive actions and achievement. Gaining market place dominance - NOW	.683
Q2dN_2 The glue that holds the organisation together is commitment to innovation and development. - NOW	.680
Q2bN_3 The leadership here is generally considered to exemplify a no-nonsense, aggressive, result focused - NOW	.672
Q2fN_1 Success is defined on the basis of development of human resources, teamwork, employee commitment and concern for people. - NOW	.666
Q2cN_2 Management style here is characterised by individual risk taking, innovation, freedom and or uniqueness. - NOW	.663
Q2bN_4 The leadership here is generally considered to exemplify, coordinating, organising, process efficiency - NOW	.662
Q2dN_3 The glue that holds the organisation together is the emphasis on achievement and goal accomplishment. - NOW	.661
Q2eN_4 The organisation emphasises on permanence and stability. Efficiency, control and smooth operation is key. - NOW	.660
Q2dN_4 The glue that holds the organisation together is formal rules and policies. - NOW	.633
Q2fN_2 Success is defined on the basis of having the most unique or newest product - NOW	.614
Q2fN_3 Success is defined on the basis of winning in the market and outpacing competition. - NOW	.602
Q2fN_4 Success is defined on the basis of efficiency. dependable delivery, smooth schedulin g and low cost production are crucial. - NOW	.521

Extraction Method: Maximum Likelihood.
a. 4 factors extracted. 6 iterations required.

Goodness-of-fit Test

© Eseigboria Grace Paula Ijasan, 2018

Chi-Square	df	Sig.
356.581	186	.000

Table a8

Rotated Factor Matrix[a]

	Factor			
	1	2	3	4
Q2aN_2 The organisation is a very dynamic entrepreneurial place. People are willing to take risks – NOW	.737			
Q2aN_1 The organisation is a very personal place. People share a lot of themselves – NOW	.657			
Q2bN_2 The leadership here is generally considered to exemplify entrepreneurship, innovating, or risk taking - NOW	.654			
Q2aN_3 The organisation is very result oriented. People are very competitive and achievement orientated. - NOW	.623	.427		
Q2bN_1 The leadership here is generally considered to exemplify mentoring, facilitating, or nurturing - NOW	.603			
Q2bN_3 The leadership here is generally considered to exemplify a no-nonsense, aggressive, result focused - NOW	.533			
Q2dN_1 The glue that holds the organisation together is loyalty or mutual trust. - NOW	.504			.425
Q2cN_4 Management style here is characterised by security of employment, conformity, predictability and or stability in relationships. - NOW	.494	.427		
Q2dN_3 The glue that holds the organisation together is the emphasis on achievement and goal accomplishment. - NOW	.425			
Q2aN_4 The organisation is a very controlled and structured place. Formal procedures govern what people do - NOW	.419	.628		
Q2cN_2 Management style here is characterised by individual risk taking, innovation, freedom and or uniqueness. - NOW		.612		
Q2cN_3 Management style here is characterised by hard driving competitiveness, high demands and achievement. - NOW	.468	.585		
Q2bN_4 The leadership here is generally considered to exemplify, coordinating, organising, process efficiency - NOW		.572		
Q2eN_4 The organisation emphasises on permanence and stability. Efficiency, control and smooth operation is key. - NOW		.552	.530	
Q2dN_4 The glue that holds the organisation together is formal rules and policies. - NOW		.506		
Q2cN_1 Management style here is characterised by teamwork, consesus and participation - NOW	.428	.483		
Q2fN_4 Success is defined on the basis of efficiency. dependable delivery, smooth scheduling and low cost production are crucial. - NOW		.460	.414	
Q2eN_3 The organisation emphasises on competitive actions and achievement. Gaining market place dominance - NOW			.632	

© Eseigboria Grace Paula Ijasan, 2018

Q2eN_2 The organisation emphasises on acquiring new resources and creating new challenges - NOW	.42 9		.54 9	
Q2fN_3 Success is defined on the basis of winning in the market and outpacing competition. – NOW			.47 8	
Q2eN_1 The organisation emphasises on human development. High trust, openness and or participation persist. - NOW	.40 6		.43 9	
Q2fN_1 Success is defined on the basis of development of human resources, teamwork, employee commitment and concern for people. - NOW				.55 6
Q2dN_2 The glue that holds the organisation together is commitment to innovation and development. - NOW	.44 1			.50 3
Q2fN_2 Success is defined on the basis of having the most unique or newest product – NOW			.47 5	.49 0

Extraction Method: Maximum Likelihood.
Rotation Method: Varimax with Kaiser Normalization.[a]
a. Rotation converged in 19 iterations.

Factor Transformation Matrix

Factor	1	2	3	4
1	.633	.521	.443	.364
2	-.717	.127	.592	.346
3	-.286	.843	-.391	-.234
4	-.059	-.043	-.549	.833

Extraction Method: Maximum Likelihood.
Rotation Method: Varimax with Kaiser Normalization.

```
RELIABILITY
  /VARIABLES=Q2aN_2 Q2aN_1 Q2bN_2 Q2aN_3 Q2bN_1 Q2bN_3 Q2dN_1 Q2cN_4 Q2dN_3
  /SCALE('factor 1 max-li') ALL
  /MODEL=ALPHA
  /STATISTICS=DESCRIPTIVE SCALE CORR
  /SUMMARY=TOTAL MEANS CORR.
```

Reliability

```
[DataSet1] C:\Users\LOBUS\Desktop\Ese Ijasan (208 file) OCTOBER 2017
USING.sav
```

Scale: factor 1 max-li

Case Processing Summary

© Eseigboria Grace Paula Ijasan, 2018

		N	%
Cases	Valid	270	100.0
	Excluded[a]	0	.0
	Total	270	100.0

a. Listwise deletion based on all variables in the procedure.

Reliability Statistics

Cronbach's Alpha	Cronbach's Alpha Based on Standardized Items	N of Items
.916	.916	9

Summary Item Statistics

	Mean	Minimum	Maximum	Range	Maximum / Minimum	Variance	N of Items
Item Means	3.865	3.656	4.070	.415	1.113	.015	9
Inter-Item Correlations	.547	.408	.705	.297	1.729	.003	9

Scale Statistics

Mean	Variance	Std. Deviation	N of Items
34.789	77.089	8.7800	9

```
RELIABILITY
  /VARIABLES=Q2aN_4 Q2cN_2 Q2cN_3 Q2bN_4 Q2eN_4 Q2dN_4 Q2cN_1 Q2fN_4
  /SCALE('factor 2 max-li') ALL
  /MODEL=ALPHA
  /STATISTICS=DESCRIPTIVE SCALE CORR
  /SUMMARY=TOTAL MEANS CORR.
```

Reliability

```
[DataSet1] C:\Users\LOBUS\Desktop\Ese Ijasan (208 file) OCTOBER 2017
USING.sav
```

Scale: factor 2 max-li

Case Processing Summary

		N	%
Cases	Valid	270	100.0
	Excluded[a]	0	.0
	Total	270	100.0

a. Listwise deletion based on all variables in the procedure.

Reliability Statistics

© Eseigboria Grace Paula Ijasan, 2018

Cronbach's Alpha	Cronbach's Alpha Based on Standardized Items	N of Items
.887	.888	8

Summary Item Statistics

	Mean	Minimum	Maximum	Range	Maximum / Minimum	Variance	N of Items
Item Means	3.986	3.844	4.144	.300	1.078	.014	8
Inter-Item Correlations	.497	.333	.613	.281	1.843	.005	8

Scale Statistics

Mean	Variance	Std. Deviation	N of Items
31.885	60.526	7.7798	8

```
RELIABILITY
  /VARIABLES=Q2fN_4 Q2eN_3 Q2eN_2 Q2fN_3 Q2eN_1
  /SCALE('factor 3 max-li') ALL
  /MODEL=ALPHA
  /STATISTICS=DESCRIPTIVE SCALE CORR
  /SUMMARY=TOTAL MEANS CORR.
```

Reliability

```
[DataSet1] C:\Users\LOBUS\Desktop\Ese Ijasan (208 file) OCTOBER 2017
USING.sav
```

Scale: factor 3 max-li

Case Processing Summary

		N	%
Cases	Valid	270	100.0
	Excluded[a]	0	.0
	Total	270	100.0

a. Listwise deletion based on all variables in the procedure.

Reliability Statistics

Cronbach's Alpha	Cronbach's Alpha Based on Standardized Items	N of Items
.809	.812	5

Summary Item Statistics

	Mean	Minimum	Maximum	Range	Maximum / Minimum	Variance	N of Items
Item Means	3.997	3.922	4.048	.126	1.032	.002	5

© Eseigboria Grace Paula Ijasan, 2018

Inter-Item Correlations	.464	.287	.595	.308	2.072	.009	5

Scale Statistics

Mean	Variance	Std. Deviation	N of Items
19.985	21.621	4.6498	5

```
FACTOR
  /VARIABLES Q2aN_1 Q2bN_1 Q2cN_1 Q2dN_1 Q2eN_1 Q2fN_1
  /MISSING LISTWISE
  /ANALYSIS Q2aN_1 Q2bN_1 Q2cN_1 Q2dN_1 Q2eN_1 Q2fN_1
  /PRINT INITIAL CORRELATION SIG KMO EXTRACTION ROTATION FSCORE
  /FORMAT SORT BLANK(.30)
  /PLOT EIGEN
  /CRITERIA FACTORS(1) ITERATE(25)
  /EXTRACTION PC
  /CRITERIA ITERATE(25)
  /ROTATION VARIMAX
  /METHOD=CORRELATION.
```

ENFORCING FACTORS AS IT IS IN THE OCAI

Factor Analysis CLAN

```
[DataSet5] C:\Users\LOBUS\Desktop\Kola Wife\Ese Ijasan 2017\Ese Ijasan (208
file).sav
```

KMO and Bartlett's Test

Kaiser-Meyer-Olkin Measure of Sampling Adequacy.		.889
Bartlett's Test of Sphericity	Approx. Chi-Square	630.151
	df	15
	Sig.	.000

Communalities

	Initial	Extraction
Q2aN_1 The organisation is a very personal place. People share a lot of themselves - NOW	1.000	.634
Q2bN_1 The leadership here is generally considered to exemplify mentoring, facilitating, or nurturing - NOW	1.000	.569
Q2cN_1 Management style here is characterised by teamwork, consesus and participation - NOW	1.000	.594
Q2dN_1 The glue that holds the organisation together is loyalty or mutual trust. - NOW	1.000	.615
Q2eN_1 The organisation emphasises on human development. High trust, openness and or participation persist. - NOW	1.000	.578

© Eseigboria Grace Paula Ijasan, 2018

Q2fN_1 Success is defined on the basis of development of human resources, teamwork, employee commitment and concern for people. - NOW	1.000	.567

Extraction Method: Principal Component Analysis.

Total Variance Explained

Component	Initial Eigenvalues			Extraction Sums of Squared Loadings		
	Total	% of Variance	Cumulative %	Total	% of Variance	Cumulative %
1	3.558	59.297	59.297	3.558	59.297	59.297
2	.596	9.941	69.238			
3	.520	8.666	77.905			
4	.492	8.200	86.105			
5	.451	7.514	93.619			
6	.383	6.381	100.000			

Extraction Method: Principal Component Analysis.

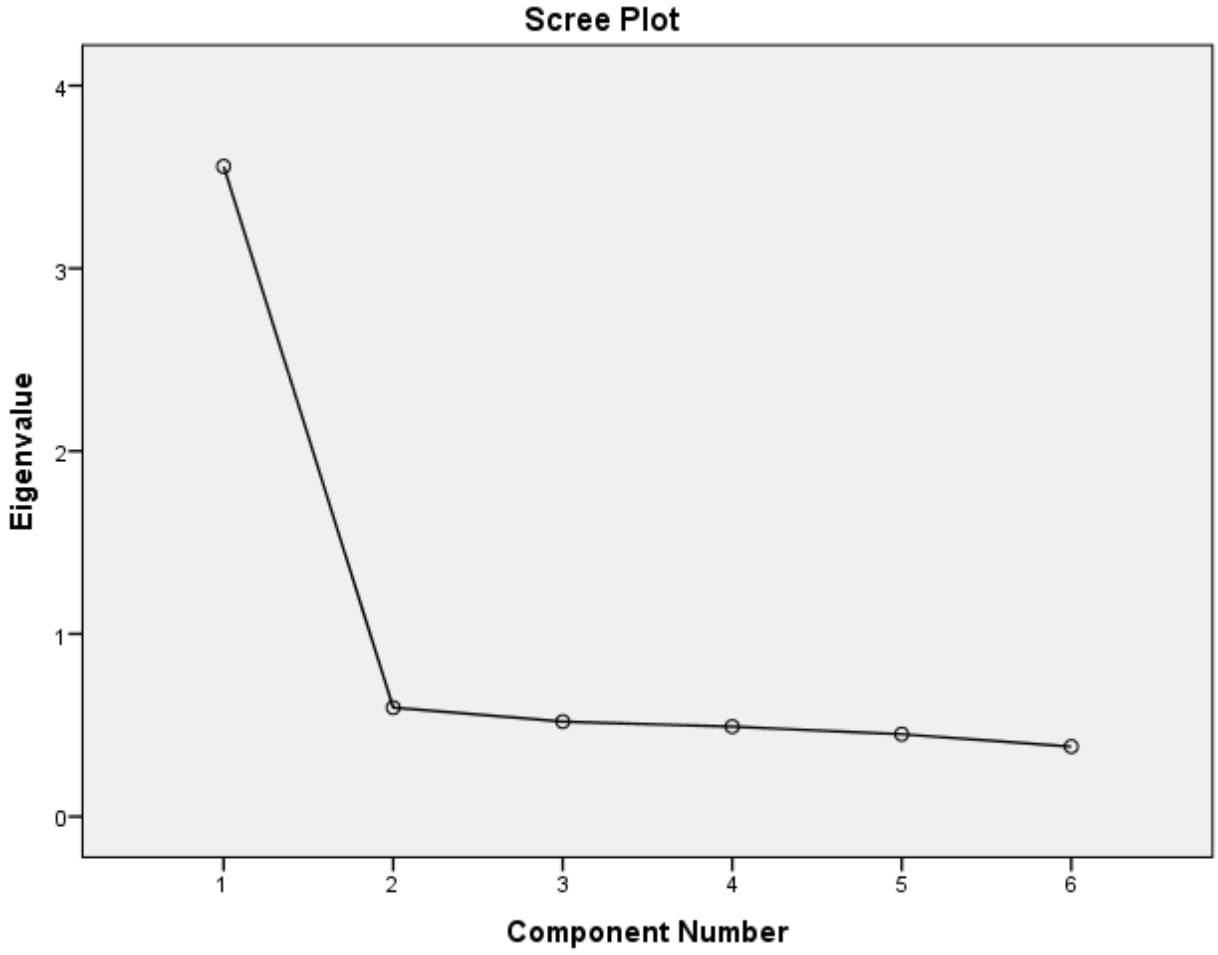

Component Matrix[a]

	Component
	1
Q2aN_1 The organisation is a very personal place. People share a lot of themselves - NOW	.796

© Eseigboria Grace Paula Ijasan, 2018

Q2dN_1 The glue that holds the organisation together is loyalty or mutual trust. - NOW	.784
Q2cN_1 Management style here is characterised by teamwork, consesus and participation - NOW	.771
Q2eN_1 The organisation emphasises on human development. High trust, openness and or participation persist. - NOW	.760
Q2bN_1 The leadership here is generally considered to exemplify mentoring, facilitating, or nurturing – NOW	.755
Q2fN_1 Success is defined on the basis of development of human resources, teamwork, employee commitment and concern for people. - NOW	.753

Extraction Method: Principal Component Analysis.
a. 1 components extracted.

Rotated Component Matrix[a]

a. Only one component was extracted. The solution cannot be rotated.

Component Score Coefficient Matrix

	Component
	1
Q2aN_1 The organisation is a very personal place. People share a lot of themselves - NOW	.224
Q2bN_1 The leadership here is generally considered to exemplify mentoring, facilitating, or nurturing – NOW	.212
Q2cN_1 Management style here is characterised by teamwork, consesus and participation - NOW	.217
Q2dN_1 The glue that holds the organisation together is loyalty or mutual trust. - NOW	.220
Q2eN_1 The organisation emphasises on human development. High trust, openness and or participation persist. - NOW	.214
Q2fN_1 Success is defined on the basis of development of human resources, teamwork, employee commitment and concern for people. - NOW	.212

Extraction Method: Principal Component Analysis.
Rotation Method: Varimax with Kaiser Normalization.

Component Score Covariance Matrix

Component	1
1	1.000

Extraction Method: Principal Component Analysis.
Rotation Method: Varimax with Kaiser Normalization.

```
RELIABILITY
```


© Eseigboria Grace Paula Ijasan, 2018

```
  /VARIABLES=Q2aN_1 Q2bN_1 Q2cN_1 Q2dN_1 Q2eN_1 Q2fN_1
  /SCALE('CLAN') ALL
  /MODEL=ALPHA
  /SUMMARY=TOTAL CORR.
```

Reliability

```
[DataSet5] C:\Users\LOBUS\Desktop\Kola Wife\Ese Ijasan 2017\Ese Ijasan (208
file).sav
```

Scale: CLAN

Case Processing Summary

		N	%
Cases	Valid	270	100.0
	Excluded[a]	0	.0
	Total	270	100.0

a. Listwise deletion based on all variables in the procedure.

Reliability Statistics

Cronbach's Alpha	Cronbach's Alpha Based on Standardized Items	N of Items
.863	.863	6

Summary Item Statistics

	Mean	Minimum	Maximum	Range	Maximum / Minimum	Variance	N of Items
Inter-Item Correlations	.511	.444	.562	.118	1.266	.001	6

Item-Total Statistics

	Scale Mean if Item Deleted	Scale Variance if Item Deleted	Corrected Item-Total Correlation	Squared Multiple Correlation	Cronbach's Alpha if Item Deleted
Q2aN_1 The organisation is a very personal place. People share a lot of themselves - NOW	19.730	22.257	.688	.487	.834
Q2bN_1 The leadership here is generally considered to exemplify mentoring, facilitating, or nurturing - NOW	19.496	23.217	.638	.417	.843
Q2cN_1 Management style here is characterised by teamwork, consesus and participation - NOW	19.500	23.069	.656	.434	.839
Q2dN_1 The glue that holds the organisation together is loyalty or mutual trust. – NOW	19.315	22.655	.672	.459	.836
Q2eN_1 The organisation emphasises on human development. High trust, openness and or participation persist. - NOW	19.463	23.171	.644	.421	.842

© Eseigboria Grace Paula Ijasan, 2018

Q2fN_1 Success is defined on the basis of development of human resources, teamwork, employee commitment and concern for people. – NOW	19.422	23.739	.635	.425	.843

```
FACTOR
  /VARIABLES Q2aN_2 Q2bN_2 Q2cN_2 Q2dN_1 Q2eN_1 Q2fN_1
  /MISSING LISTWISE
  /ANALYSIS Q2aN_2 Q2bN_2 Q2cN_2 Q2dN_1 Q2eN_1 Q2fN_1
  /PRINT INITIAL CORRELATION SIG KMO EXTRACTION ROTATION FSCORE
  /FORMAT SORT BLANK(.30)
  /PLOT EIGEN
  /CRITERIA FACTORS(1) ITERATE(25)
  /EXTRACTION PC
  /CRITERIA ITERATE(25)
  /ROTATION VARIMAX
  /METHOD=CORRELATION.


RELIABILITY
  /VARIABLES=Q2aN_2 Q2bN_2 Q2cN_2 Q2dN_2 Q2eN_2 Q2fN_2
  /SCALE('ADHORCRACY CULTURE') ALL
  /MODEL=ALPHA
  /SUMMARY=TOTAL CORR.
```

Reliability

```
[DataSet5] C:\Users\LOBUS\Desktop\Kola Wife\Ese Ijasan 2017\Ese Ijasan (208
file).sav
```

Scale: ADHORCRACY CULTURE

Case Processing Summary

		N	%
Cases	Valid	270	100.0
	Excluded[a]	0	.0
	Total	270	100.0

a. Listwise deletion based on all variables in the procedure.

Reliability Statistics

Cronbach's Alpha	Cronbach's Alpha Based on Standardized Items	N of Items
.831	.831	6

Summary Item Statistics

	Mean	Minimum	Maximum	Range	Maximum / Minimum	Variance	N of Items

© Eseigboria Grace Paula Ijasan, 2018

Inter-Item Correlations	.450	.339	.613	.274	1.807	.005	6

Item-Total Statistics

	Scale Mean if Item Deleted	Scale Variance if Item Deleted	Corrected Item-Total Correlation	Squared Multiple Correlation	Cronbach's Alpha if Item Deleted
Q2aN_2 The organisation is a very dynamic entrepreneurial place. People are willing to take risks - NOW	19.637	19.682	.643	.467	.795
Q2bN_2 The leadership here is generally considered to exemplify entrepreneurship, innovating, or risk taking - NOW	19.544	19.505	.664	.472	.791
Q2cN_2 Management style here is characterised by individual risk taking, innovation, freedom and or uniqueness. - NOW	19.519	20.942	.538	.297	.817
Q2dN_2 The glue that holds the organisation together is commitment to innovation and development. - NOW	19.411	20.399	.609	.374	.802
Q2eN_2 The organisation emphasises on acquiring new resources and creating new challenges - NOW	19.333	20.275	.628	.409	.799
Q2fN_2 Success is defined on the basis of having the most unique or newest product - NOW	19.407	21.008	.532	.314	.818

```
FACTOR
  /VARIABLES Q2aN_3 Q2bN_3 Q2cN_3 Q2dN_3 Q2eN_3 Q2fN_3
  /MISSING LISTWISE
  /ANALYSIS Q2aN_3 Q2bN_3 Q2cN_3 Q2dN_3 Q2eN_3 Q2fN_3
  /PRINT INITIAL CORRELATION SIG KMO EXTRACTION ROTATION FSCORE
  /FORMAT SORT BLANK(.30)
  /PLOT EIGEN
  /CRITERIA FACTORS(1) ITERATE(25)
  /EXTRACTION PC
  /CRITERIA ITERATE(25)
  /ROTATION VARIMAX
  /METHOD=CORRELATION.
```

Factor Analysis MARKET CULTURE

```
[DataSet5] C:\Users\LOBUS\Desktop\Kola Wife\Ese Ijasan 2017\Ese Ijasan (208
file).sav
```

KMO and Bartlett's Test

Kaiser-Meyer-Olkin Measure of Sampling Adequacy.		.866
Bartlett's Test of Sphericity	Approx. Chi-Square	538.669
	df	15
	Sig.	.000

Communalities

© Eseigboria Grace Paula Ijasan, 2018

	Initial	Extraction
Q2aN_3 The organisation is very result oriented. People are very competitive and achievement orientated. - NOW	1.000	.624
Q2bN_3 The leadership here is generally considered to exemplify a no-nonsense, aggressive, result focused - NOW	1.000	.540
Q2cN_3 Management style here is characterised by hard driving competitiveness, high demands and achievement. - NOW	1.000	.600
Q2dN_3 The glue that holds the organisation together is the emphasis on achievement and goal accomplishment. - NOW	1.000	.547
Q2eN_3 The organisation emphasises on competitive actions and achievement. Gaining market place dominance - NOW	1.000	.552
Q2fN_3 Success is defined on the basis of winning in the market and outpacing competition. – NOW	1.000	.454

Extraction Method: Principal Component Analysis.

Total Variance Explained

Component	Initial Eigenvalues			Extraction Sums of Squared Loadings		
	Total	% of Variance	Cumulative %	Total	% of Variance	Cumulative %
1	3.317	55.279	55.279	3.317	55.279	55.279
2	.745	12.423	67.702			
3	.572	9.539	77.241			
4	.489	8.158	85.400			
5	.471	7.843	93.243			
6	.405	6.757	100.000			

Extraction Method: Principal Component Analysis.

© Eseigboria Grace Paula Ijasan, 2018

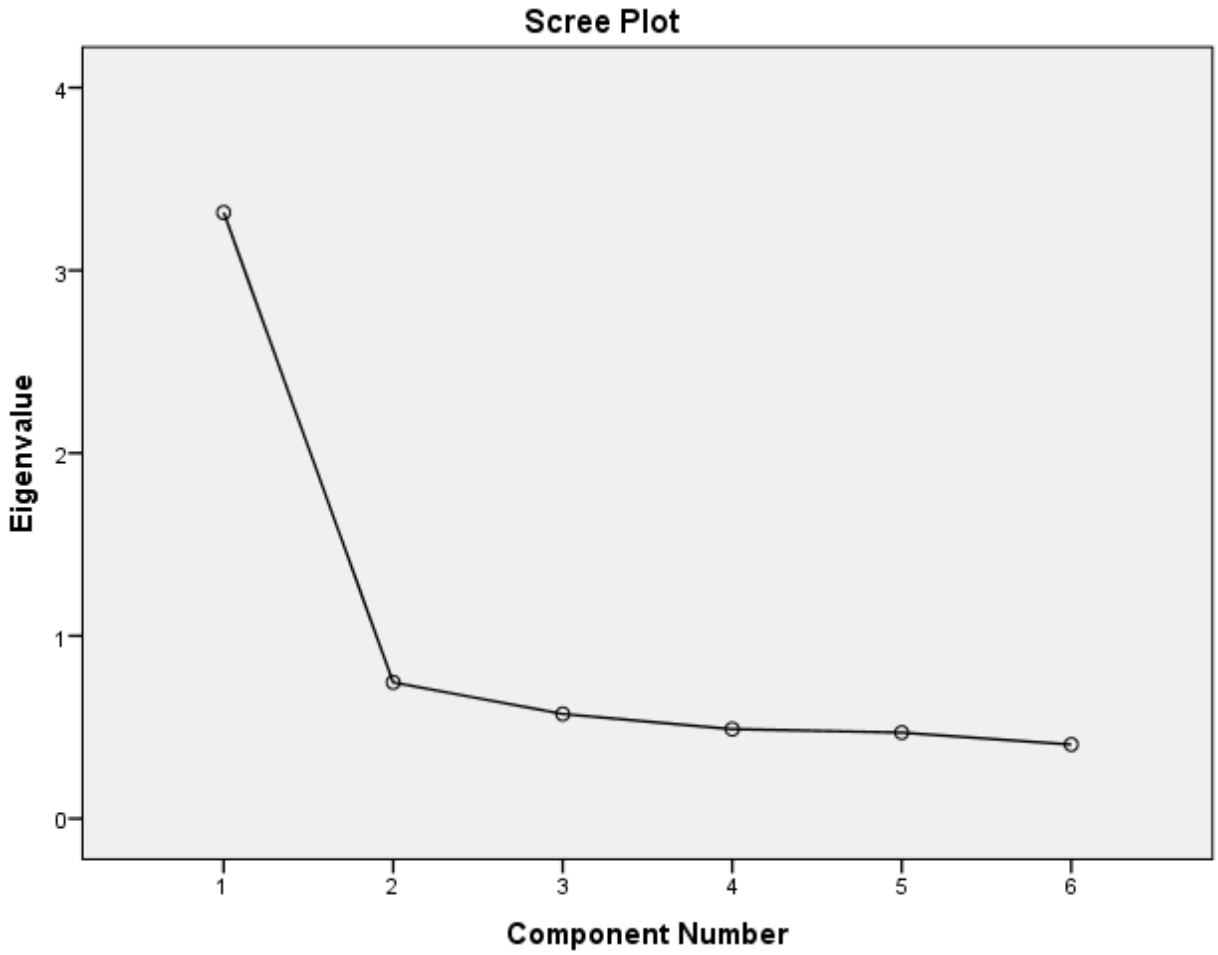

Component Matrix[a]

	Component
	1
Q2aN_3 The organisation is very result oriented. People are very competitive and achievement orientated. - NOW	.790
Q2cN_3 Management style here is characterised by hard driving competitiveness, high demands and achievement. - NOW	.775
Q2eN_3 The organisation emphasises on competitive actions and achievement. Gaining market place dominance - NOW	.743
Q2dN_3 The glue that holds the organisation together is the emphasis on achievement and goal accomplishment. - NOW	.739
Q2bN_3 The leadership here is generally considered to exemplify a no-nonsense, aggressive, result focused - NOW	.735
Q2fN_3 Success is defined on the basis of winning in the market and outpacing competition. - NOW	.674

Extraction Method: Principal Component Analysis.
a. 1 components extracted.

© Eseigboria Grace Paula Ijasan, 2018

Rotated Component Matrix[a]

a. Only one component was extracted. The solution cannot be rotated.

Component Score Coefficient Matrix

	Component
	1
Q2aN_3 The organisation is very result oriented. People are very competitive and achievement orientated. - NOW	.238
Q2bN_3 The leadership here is generally considered to exemplify a no-nonsense, aggressive, result focused - NOW	.222
Q2cN_3 Management style here is characterised by hard driving competitiveness, high demands and achievement. - NOW	.234
Q2dN_3 The glue that holds the organisation together is the emphasis on achievement and goal accomplishment. - NOW	.223
Q2eN_3 The organisation emphasises on competitive actions and achievement. Gaining market place dominance - NOW	.224
Q2fN_3 Success is defined on the basis of winning in the market and outpacing competition. - NOW	.203

Extraction Method: Principal Component Analysis.
Rotation Method: Varimax with Kaiser Normalization.

Component Score Covariance Matrix

Component	1
1	1.000

Extraction Method: Principal Component Analysis.
Rotation Method: Varimax with Kaiser Normalization.

```
RELIABILITY
  /VARIABLES=Q2aN_3 Q2bN_3 Q2cN_3 Q2dN_3 Q2eN_3 Q2fN_3
  /SCALE('MARKET CULTURE') ALL
  /MODEL=ALPHA
  /SUMMARY=TOTAL CORR.
```

Reliability

```
[DataSet5] C:\Users\LOBUS\Desktop\Kola Wife\Ese Ijasan 2017\Ese Ijasan (208
file).sav
```

Scale: MARKET CULTURE

Case Processing Summary

© Eseigboria Grace Paula Ijasan, 2018

		N	%
Cases	Valid	270	100.0
	Excluded[a]	0	.0
	Total	270	100.0

a. Listwise deletion based on all variables in the procedure.

Reliability Statistics

Cronbach's Alpha	Cronbach's Alpha Based on Standardized Items	N of Items
.838	.837	6

Summary Item Statistics

	Mean	Minimum	Maximum	Range	Maximum / Minimum	Variance	N of Items
Inter-Item Correlations	.462	.325	.575	.251	1.772	.004	6

Item-Total Statistics

	Scale Mean if Item Deleted	Scale Variance if Item Deleted	Corrected Item-Total Correlation	Squared Multiple Correlation	Cronbach's Alpha if Item Deleted
Q2aN_3 The organisation is very result oriented. People are very competitive and achievement orientated. - NOW	19.922	22.102	.670	.464	.799
Q2bN_3 The leadership here is generally considered to exemplify a no-nonsense, aggressive, result focused - NOW	19.981	22.777	.602	.397	.814
Q2cN_3 Management style here is characterised by hard driving competitiveness, high demands and achievement. - NOW	19.804	21.943	.650	.435	.803
Q2dN_3 The glue that holds the organisation together is the emphasis on achievement and goal accomplishment. - NOW	19.922	23.671	.609	.380	.812
Q2eN_3 The organisation emphasises on competitive actions and achievement. Gaining market place dominance - NOW	19.815	23.527	.613	.394	.811
Q2fN_3 Success is defined on the basis of winning in the market and outpacing competition. - NOW	19.870	24.255	.535	.319	.826

```
FACTOR
  /VARIABLES Q2aN_4 Q2bN_4 Q2cN_4 Q2dN_4 Q2eN_4 Q2fN_4
  /MISSING LISTWISE
  /ANALYSIS Q2aN_4 Q2bN_4 Q2cN_4 Q2dN_4 Q2eN_4 Q2fN_4
  /PRINT INITIAL CORRELATION SIG KMO EXTRACTION ROTATION FSCORE
  /FORMAT SORT BLANK(.30)
  /PLOT EIGEN
  /CRITERIA FACTORS(1) ITERATE(25)
  /EXTRACTION PC
  /CRITERIA ITERATE(25)
```


© Eseigboria Grace Paula Ijasan, 2018

```
  /ROTATION VARIMAX
  /METHOD=CORRELATION.
```

Factor Analysis: HIERARCHY

```
[DataSet5] C:\Users\LOBUS\Desktop\Kola Wife\Ese Ijasan 2017\Ese Ijasan (208
file).sav
```

KMO and Bartlett's Test

Kaiser-Meyer-Olkin Measure of Sampling Adequacy.		.885
Bartlett's Test of Sphericity	Approx. Chi-Square	552.402
	df	15
	Sig.	.000

Communalities

	Initial	Extraction
Q2aN_4 The organisation is a very controlled and structured place. Formal procedures govern what people do - NOW	1.000	.613
Q2bN_4 The leadership here is generally considered to exemplify, coordinating, organising, process efficiency - NOW	1.000	.617
Q2cN_4 Management style here is characterised by security of employment, conformity, predictability and or stability in relationships. - NOW	1.000	.534
Q2dN_4 The glue that holds the organisation together is formal rules and policies. - NOW	1.000	.563
Q2eN_4 The organisation emphasises on permanence and stability. Efficiency, control and smooth operation is key. - NOW	1.000	.617
Q2fN_4 Success is defined on the basis of efficiency. dependable delivery, smooth scheduling and low cost production are crucial. - NOW	1.000	.434

Extraction Method: Principal Component Analysis.

Total Variance Explained

Component	Initial Eigenvalues			Extraction Sums of Squared Loadings		
	Total	% of Variance	Cumulative %	Total	% of Variance	Cumulative %
1	3.377	56.289	56.289	3.377	56.289	56.289
2	.668	11.129	67.419			
3	.570	9.493	76.911			
4	.509	8.486	85.397			
5	.442	7.364	92.761			
6	.434	7.239	100.000			

Extraction Method: Principal Component Analysis.

© Eseigboria Grace Paula Ijasan, 2018

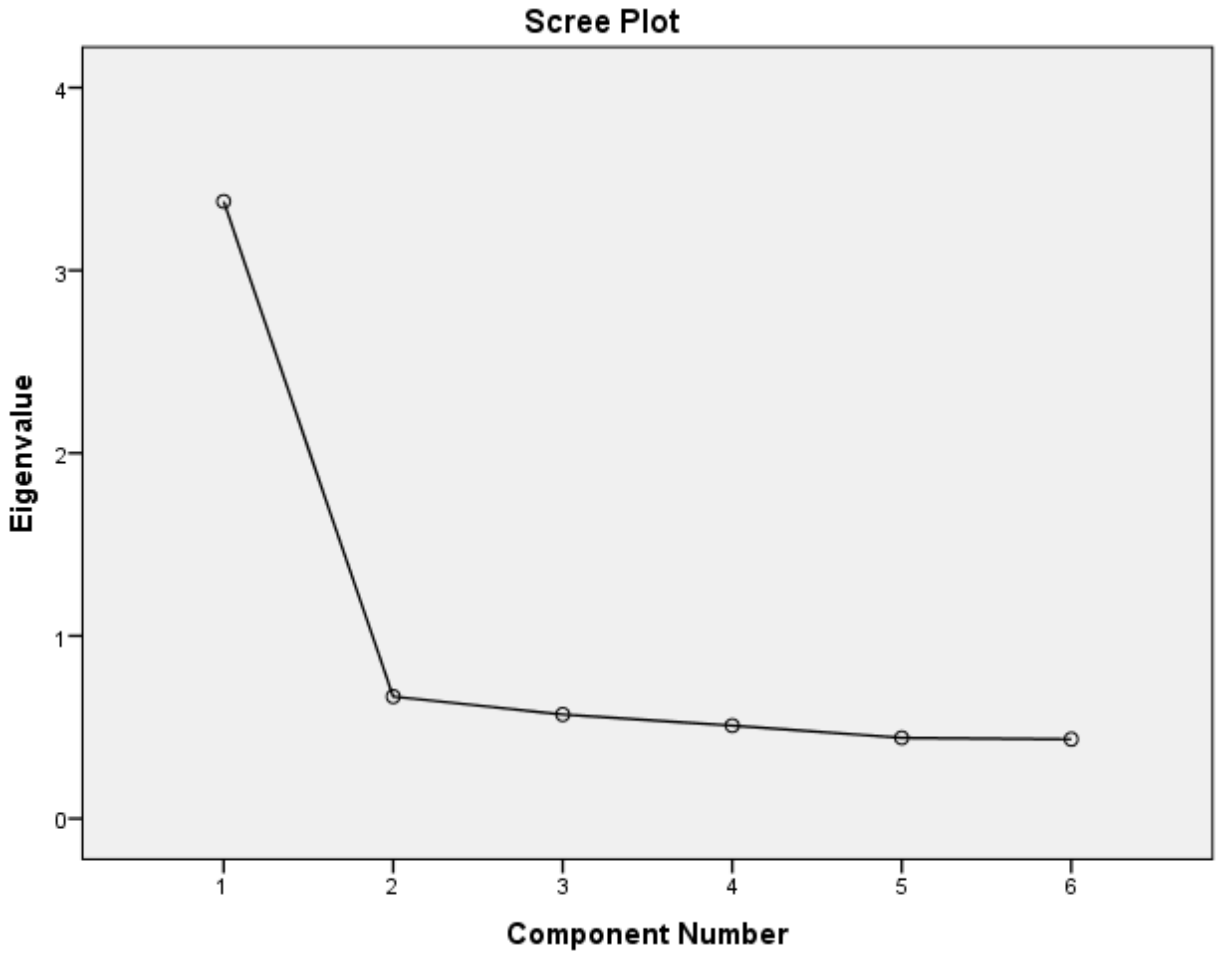

Component Matrix[a]

	Component
	1
Q2eN_4 The organisation emphasises on permanence and stability. Efficiency, control and smooth operation is key. - NOW	.785
Q2bN_4 The leadership here is generally considered to exemplify, coordinating, organising, process efficiency - NOW	.785
Q2aN_4 The organisation is a very controlled and structured place. Formal procedures govern what people do - NOW	.783
Q2dN_4 The glue that holds the organisation together is formal rules and policies. - NOW	.750
Q2cN_4 Management style here is characterised by security of employment, conformity, predictability and or stability in relationships. - NOW	.731
Q2fN_4 Success is defined on the basis of efficiency. dependable delivery, smooth scheduling and low cost production are crucial. - NOW	.659

Extraction Method: Principal Component Analysis.
a. 1 components extracted.

© Eseigboria Grace Paula Ijasan, 2018

Rotated Component Matrix[a]

a. Only one component was extracted. The solution cannot be rotated.

Component Score Coefficient Matrix

	Component
	1
Q2aN_4 The organisation is a very controlled and structured place. Formal procedures govern what people do - NOW	.232
Q2bN_4 The leadership here is generally considered to exemplify, coordinating, organising, process efficiency - NOW	.233
Q2cN_4 Management style here is characterised by security of employment, conformity, predictability and or stability in relationships. - NOW	.216
Q2dN_4 The glue that holds the organisation together is formal rules and policies. - NOW	.222
Q2eN_4 The organisation emphasises on permanence and stability. Efficiency, control and smooth operation is key. - NOW	.233
Q2fN_4 Success is defined on the basis of efficiency. dependable delivery, smooth scheduling and low cost production are crucial. - NOW	.195

Extraction Method: Principal Component Analysis.
Rotation Method: Varimax with Kaiser Normalization.

Component Score Covariance Matrix

Component	1
1	1.000

Extraction Method: Principal Component Analysis.
Rotation Method: Varimax with Kaiser Normalization.

```
RELIABILITY
  /VARIABLES=Q2aN_4 Q2bN_4 Q2cN_4 Q2dN_4 Q2eN_4 Q2fN_4
  /SCALE('HIERARCHY CULTURE') ALL
  /MODEL=ALPHA
  /SUMMARY=TOTAL CORR.
```

Reliability

```
[DataSet5] C:\Users\LOBUS\Desktop\Kola Wife\Ese Ijasan 2017\Ese Ijasan (208
file).sav
```

Scale: HIERARCHY CULTURE

Case Processing Summary

© Eseigboria Grace Paula Ijasan, 2018

		N	%
Cases	Valid	270	100.0
	Excluded[a]	0	.0
	Total	270	100.0

a. Listwise deletion based on all variables in the procedure.

Reliability Statistics

Cronbach's Alpha	Cronbach's Alpha Based on Standardized Items	N of Items
.843	.844	6

Summary Item Statistics

	Mean	Minimum	Maximum	Range	Maximum / Minimum	Variance	N of Items
Inter-Item Correlations	.473	.376	.554	.177	1.471	.003	6

Item-Total Statistics

	Scale Mean if Item Deleted	Scale Variance if Item Deleted	Corrected Item-Total Correlation	Squared Multiple Correlation	Cronbach's Alpha if Item Deleted
Q2aN_4 The organisation is a very controlled and structured place. Formal procedures govern what people do - NOW	20.096	24.727	.660	.446	.810
Q2bN_4 The leadership here is generally considered to exemplify, coordinating, organising, process efficiency - NOW	19.956	24.199	.664	.451	.809
Q2cN_4 Management style here is characterised by security of employment, conformity, predictability and or stability in relationships. – NOW	20.089	25.561	.600	.369	.822
Q2dN_4 The glue that holds the organisation together is formal rules and policies. - NOW	19.796	25.077	.623	.398	.818
Q2eN_4 The organisation emphasises on permanence and stability. Efficiency, control and smooth operation is key. - NOW	19.811	24.644	.666	.448	.809
Q2fN_4 Success is defined on the basis of efficiency. dependable delivery, smooth scheduling and low cost production are crucial. – NOW	19.956	25.909	.524	.283	.837

```
GET
  FILE='C:\Users\LOBUS\Desktop\Ese Ijasan (208 file) OCTOBER 2017
USING.sav'.
DATASET NAME DataSet1 WINDOW=FRONT.
FACTOR
  /VARIABLES Q2aN_2 Q2bN_2 Q2cN_2 Q2dN_2 Q2eN_2 Q2fN_2
  /MISSING LISTWISE
```


© Eseigboria Grace Paula Ijasan, 2018

```
  /ANALYSIS Q2aN_2 Q2bN_2 Q2cN_2 Q2dN_2 Q2eN_2 Q2fN_2
  /PRINT INITIAL CORRELATION SIG KMO EXTRACTION
  /FORMAT SORT BLANK(.30)
  /PLOT EIGEN
  /CRITERIA FACTORS(1) ITERATE(25)
  /EXTRACTION PC
  /ROTATION NOROTATE
  /METHOD=CORRELATION.
```

Factor Analysis adhorcracy

```
[DataSet1] C:\Users\LOBUS\Desktop\Ese Ijasan (208 file) OCTOBER 2017
USING.sav
```

KMO and Bartlett's Test

Kaiser-Meyer-Olkin Measure of Sampling Adequacy.		.858
Bartlett's Test of Sphericity	Approx. Chi-Square	521.496
	df	15
	Sig.	.000

Communalities

	Initial	Extraction
Q2aN_2 The organisation is a very dynamic entrepreneurial place. People are willing to take risks – NOW	1.000	.600
Q2bN_2 The leadership here is generally considered to exemplify entrepreneurship, innovating, or risk taking - NOW	1.000	.624
Q2cN_2 Management style here is characterised by individual risk taking, innovation, freedom and or uniqueness. - NOW	1.000	.459
Q2dN_2 The glue that holds the organisation together is commitment to innovation and development. - NOW	1.000	.548
Q2eN_2 The organisation emphasises on acquiring new resources and creating new challenges - NOW	1.000	.577
Q2fN_2 Success is defined on the basis of having the most unique or newest product - NOW	1.000	.452

Extraction Method: Principal Component Analysis.

Total Variance Explained

Component	Initial Eigenvalues			Extraction Sums of Squared Loadings		
	Total	% of Variance	Cumulative %	Total	% of Variance	Cumulative %
1	3.260	54.331	54.331	3.260	54.331	54.331
2	.723	12.050	66.381			
3	.650	10.832	77.213			
4	.525	8.743	85.956			
5	.467	7.783	93.739			
6	.376	6.261	100.000			

Extraction Method: Principal Component Analysis.

© Eseigboria Grace Paula Ijasan, 2018

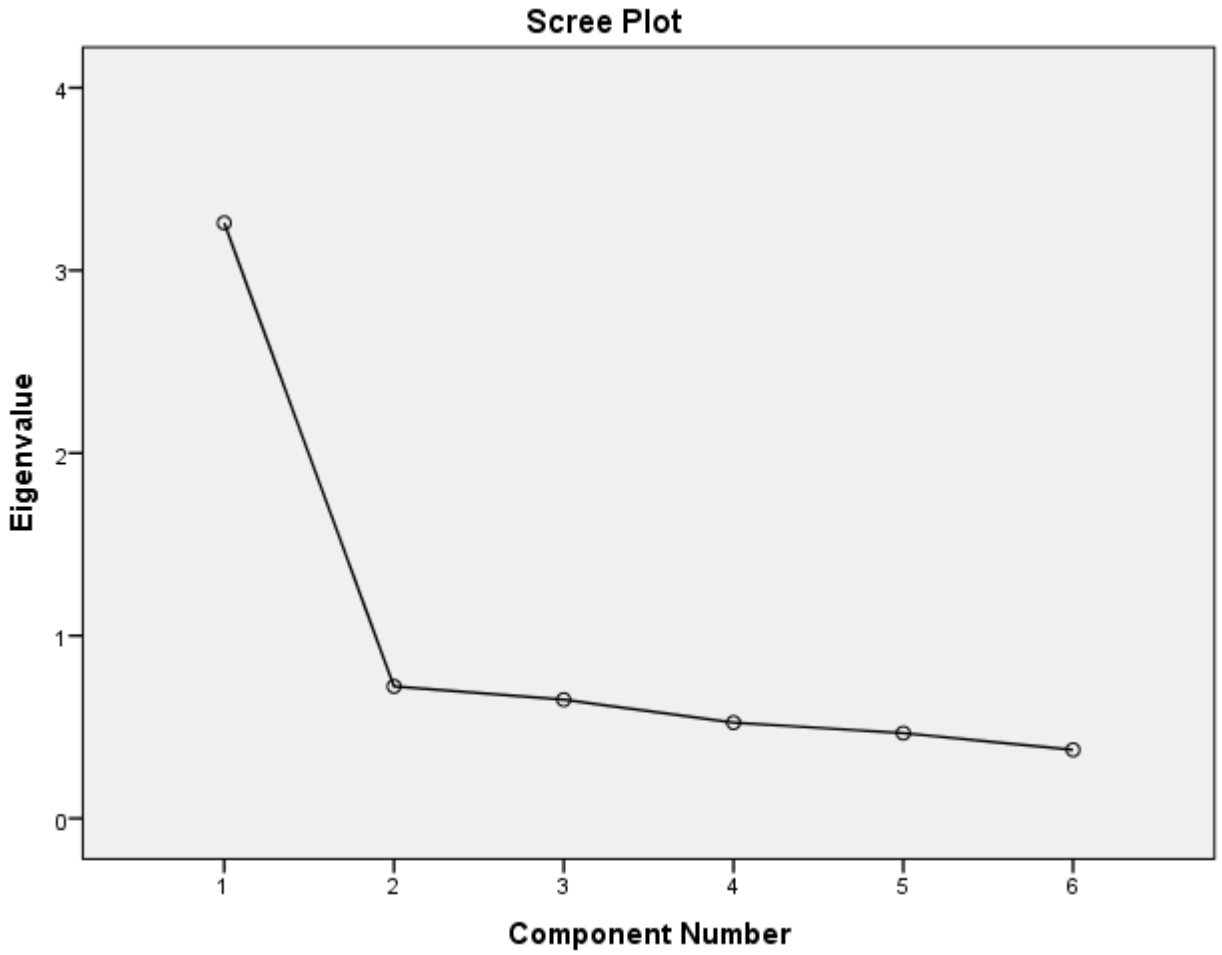

Component Matrix[a]

	Component
	1
Q2bN_2 The leadership here is generally considered to exemplify entrepreneurship, innovating, or risk taking - NOW	.790
Q2aN_2 The organisation is a very dynamic entrepreneurial place. People are willing to take risks – NOW	.774
Q2eN_2 The organisation emphasises on acquiring new resources and creating new challenges – NOW	.760
Q2dN_2 The glue that holds the organisation together is commitment to innovation and development. – NOW	.741
Q2cN_2 Management style here is characterised by individual risk taking, innovation, freedom and or uniqueness. - NOW	.677
Q2fN_2 Success is defined on the basis of having the most unique or newest product - NOW	.672

Extraction Method: Principal Component Analysis.
a. 1 components extracted.

```
COMPUTE Clan=Q2aN_1  + Q2bN_1 + Q2cN_1 + Q2dN_1 + Q2eN_1 + Q2fN_1.
EXECUTE.
COMPUTE Adhocracy=Q2aN_2  + Q2bN_2 + Q2cN_2 + Q2dN_2 + Q2eN_2 + Q2fN_2.
EXECUTE.
```


© Eseigboria Grace Paula Ijasan, 2018

```
COMPUTE market=Q2aN_3  + Q2bN_3 + Q2cN_3 + Q2dN_3 + Q2eN_3 + Q2fN_3.
EXECUTE.
COMPUTE Hierachy=Q2aN_4  + Q2bN_4 + Q2cN_4 + Q2dN_4 + Q2eN_4 + Q2fN_4.
EXECUTE.

GET
  FILE='C:\Users\LOBUS\Desktop\Ese Ijasan (208 file) OCTOBER 2017
USING.sav'.
DATASET NAME DataSet1 WINDOW=FRONT.
CORRELATIONS
  /VARIABLES=Clan Adhocracy market Hierachy
  /PRINT=TWOTAIL NOSIG
  /STATISTICS DESCRIPTIVES XPROD
  /MISSING=PAIRWISE.
```

Correlation

```
[DataSet1] C:\Users\LOBUS\Desktop\Ese Ijasan (208 file) OCTOBER 2017
USING.sav
```

Descriptive Statistics

	Mean	Std. Deviation	N
Clan	23.39	5.680	270
Adhocracy	23.37	5.318	270
Market	23.86	5.669	270
Hierachy	23.94	5.910	270

Correlations

		Clan	Adhocracy	market	Hierachy
	Pearson Correlation	1	.895**	.853**	.755**
	Sig. (2-tailed)		.000	.000	.000
Clan	Sum of Squares and Cross-products	8677.941	7272.481	7386.252	6815.163
	Covariance	32.260	27.035	27.458	25.335
	N	270	270	270	270
	Pearson Correlation	.895**	1	.881**	.775**
	Sig. (2-tailed)	.000		.000	.000
Adhocracy	Sum of Squares and Cross-products	7272.481	7606.963	7142.704	6549.926
	Covariance	27.035	28.279	26.553	24.349
	N	270	270	270	270
	Pearson Correlation	.853**	.881**	1	.830**
	Sig. (2-tailed)	.000	.000		.000
market	Sum of Squares and Cross-products	7386.252	7142.704	8645.930	7478.807
	Covariance	27.458	26.553	32.141	27.802
	N	270	270	270	270
	Pearson Correlation	.755**	.775**	.830**	1
	Sig. (2-tailed)	.000	.000	.000	
Hierachy	Sum of Squares and Cross-products	6815.163	6549.926	7478.807	9397.052
	Covariance	25.335	24.349	27.802	34.933
	N	270	270	270	270

**. Correlation is significant at the 0.01 level (2-tailed).

```
DATASET ACTIVATE DataSet1.

SAVE OUTFILE='C:\Users\LOBUS\Desktop\Ese Ijasan (208 file) OCTOBER 2017
USING.sav'
  /COMPRESSED.
CORRELATIONS
```


© Eseigboria Grace Paula Ijasan, 2018

```
  /VARIABLES=Ocai1 Ocai2 Ocai3 Ocai4
  /PRINT=TWOTAIL NOSIG
  /STATISTICS DESCRIPTIVES XPROD
  /MISSING=PAIRWISE.
```

Correlations

```
[DataSet1] C:\Users\LOBUS\Desktop\Ese Ijasan (208 file) OCTOBER 2017
USING.sav
```

Descriptive Statistics

	Mean	Std. Deviation	N
Ocai1	34.79	8.780	270
Ocai2	31.89	7.780	270
Ocai3	16.00	3.846	270
Ocai4	11.89	2.920	270

Correlations

		Ocai1	Ocai2	Ocai3	Ocai4
Ocai1	Pearson Correlation	1	.791**	.753**	.710**
	Sig. (2-tailed)		.000	.000	.000
	Sum of Squares and Cross-products	20736.967	14539.456	6845.000	4895.456
	Covariance	77.089	54.050	25.446	18.199
	N	270	270	270	270
Ocai2	Pearson Correlation	.791**	1	.695**	.676**
	Sig. (2-tailed)	.000		.000	.000
	Sum of Squares and Cross-products	14539.456	16281.441	5593.000	4133.441
	Covariance	54.050	60.526	20.792	15.366
	N	270	270	270	270
Ocai3	Pearson Correlation	.753**	.695**	1	.714**
	Sig. (2-tailed)	.000	.000		.000
	Sum of Squares and Cross-products	6845.000	5593.000	3980.000	2157.000
	Covariance	25.446	20.792	14.796	8.019
	N	270	270	270	270
Ocai4	Pearson Correlation	.710**	.676**	.714**	1
	Sig. (2-tailed)	.000	.000	.000	
	Sum of Squares and Cross-products	4895.456	4133.441	2157.000	2293.441
	Covariance	18.199	15.366	8.019	8.526
	N	270	270	270	270

**. Correlation is significant at the 0.01 level (2-tailed).

```
CORRELATIONS
  /VARIABLES=Ocai1 Ocai2 Ocai3 Ocai4
  /PRINT=TWOTAIL NOSIG
  /MISSING=PAIRWISE.
```


© Eseigboria Grace Paula Ijasan, 2018

Correlations

```
[DataSet1] C:\Users\LOBUS\Desktop\Ese Ijasan (208 file) OCTOBER 2017
USING.sav
```

Correlations

		Ocai1	Ocai2	Ocai3	Ocai4
Ocai1	Pearson Correlation	1	.791**	.753**	.710**
	Sig. (2-tailed)		.000	.000	.000
	N	270	270	270	270
Ocai2	Pearson Correlation	.791**	1	.695**	.676**
	Sig. (2-tailed)	.000		.000	.000
	N	270	270	270	270
Ocai3	Pearson Correlation	.753**	.695**	1	.714**
	Sig. (2-tailed)	.000	.000		.000
	N	270	270	270	270
Ocai4	Pearson Correlation	.710**	.676**	.714**	1
	Sig. (2-tailed)	.000	.000	.000	
	N	270	270	270	270

**. Correlation is significant at the 0.01 level (2-tailed).

APPENDIX 3
EFA AND RELIABILITY FOR PSYCHOLOGICAL EMPOWERMENT

Factor Analysis

```
[DataSet5] C:\Users\LOBUS\Desktop\Ese Ijasan (208 file) OCTOBER 2017
USING.sav
```

Table b1

KMO and Bartlett's Test

Kaiser-Meyer-Olkin Measure of Sampling Adequacy.		.839
Bartlett's Test of Sphericity	Approx. Chi-Square	2246.304
	df	171
	Sig.	.000

Table b2

Communalities

	Initial	Extraction
Q3_1 I am confident about my ability to do my job.	1.000	.755
Q3_2 The work that I do is important to me.	1.000	.867
Q3_3 I have significant autonomy in determining how I do my job.	1.000	.706
Q3_4 My impact on what happens in my department is large.	1.000	.551
Q3_5 My job activities are personally meaningful to me.	1.000	.594

© Eseigboria Grace Paula Ijasan, 2018

Q3_6 I can decide on my own how to go about doing my own work.	1.000	.401
Q3_7 I really care about what I do on my job.	1.000	.631
Q3_8 My job is well within the scope of my abilities.	1.000	.665
Q3_9 I have considerable opportunity for independence and freedom on how I do my job.	1.000	.578
Q3_10 I am encouraged to express ideas/suggestions	1.000	.711
Q3_11 My suggestions are used to make decisions that affect me and my team	1.000	.780
Q3_12 My ideas are considered even when management disagrees with them.	1.000	.632
Q3_13 Company decisions are explained to me	1.000	.683
Q3_14 I am told how my work fits into the company	1.000	.740
Q3_15 I am shown genuine concern for my individual success	1.000	.706
Q3_16 Attention is given to my concerns and discussed patiently	1.000	.595
Q3_17 I am shown areas which need more training	1.000	.696
Q3_18 I am provided with the assistance needed to solve problems on my own	1.000	.451
Q3_19 I am encouraged to solve problems with my team	1.000	.397

Extraction Method: Principal Component Analysis.

Table b3

Total Variance Explained

Component	Initial Eigenvalues			Extraction Sums of Squared Loadings			Rotation Sums of Squared Loadings		
	Total	% of Variance	Cumulative %	Total	% of Variance	Cumulative %	Total	% of Variance	Cumulative %
1	6.476	34.084	34.084	6.476	34.084	34.084	2.896	15.242	15.242
2	1.845	9.710	43.793	1.845	9.710	43.793	2.800	14.739	29.981
3	1.579	8.312	52.105	1.579	8.312	52.105	2.343	12.330	42.311
4	1.157	6.087	58.192	1.157	6.087	58.192	2.217	11.667	53.977
5	1.083	5.701	63.893	1.083	5.701	63.893	1.884	9.916	63.893
6	.961	5.060	68.953						
7	.783	4.122	73.076						
8	.721	3.795	76.870						
9	.628	3.303	80.173						
10	.584	3.075	83.248						
11	.572	3.010	86.258						
12	.509	2.681	88.939						
13	.424	2.231	91.170						
14	.377	1.984	93.155						
15	.347	1.826	94.981						
16	.324	1.704	96.685						
17	.296	1.559	98.243						
18	.212	1.117	99.360						
19	.122	.640	100.000						

Extraction Method: Principal Component Analysis.

© Eseigboria Grace Paula Ijasan, 2018

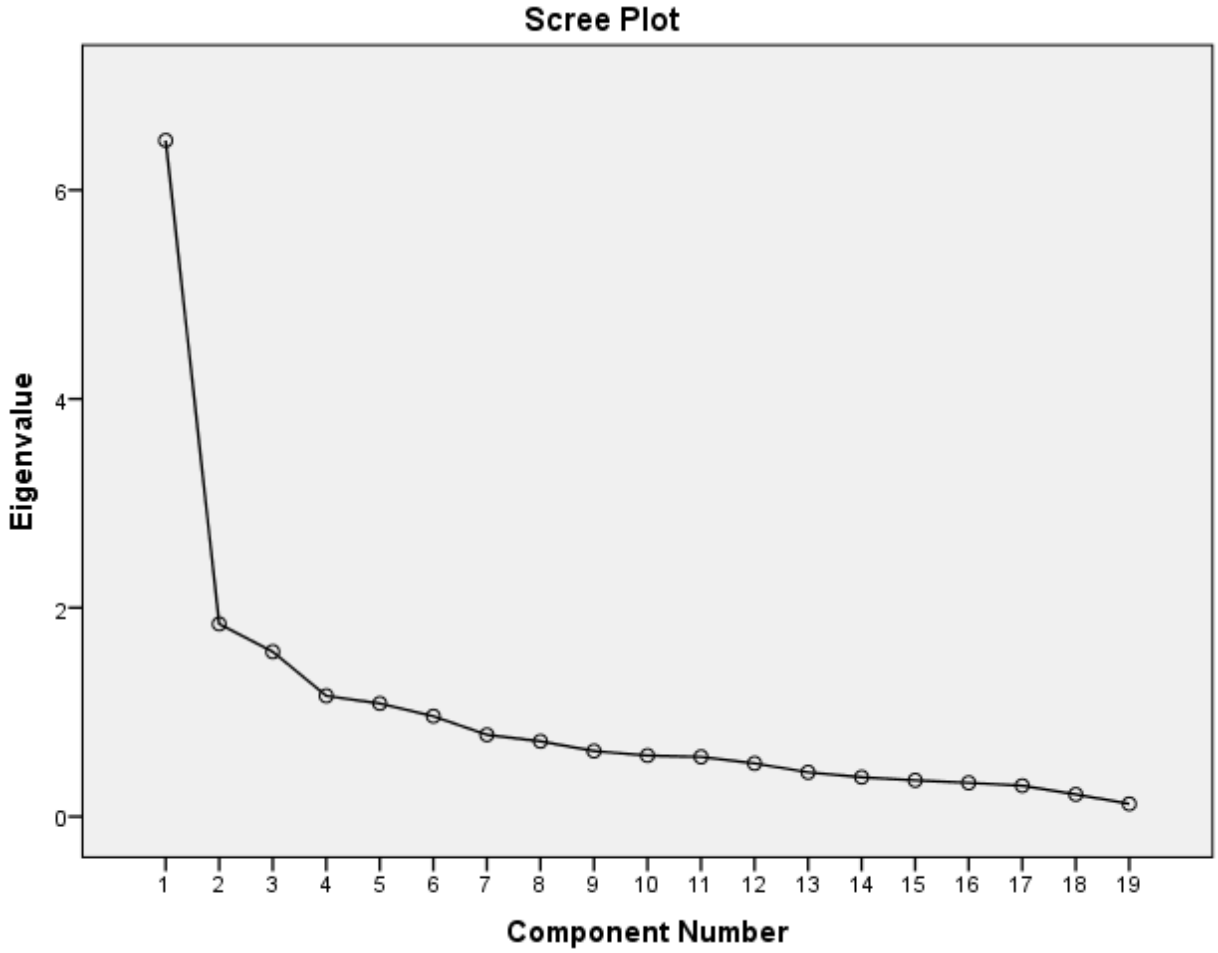

Table b4

Component Matrix[a]

	Component				
	1	2	3	4	5
Q3_3 I have significant autonomy in determining how I do my job.	.727	-.384			
Q3_9 I have considerable opportunity for independence and freedom on how I do my job.	.702				
Q3_10 I am encouraged to express ideas/suggestions	.653		-.471		
Q3_12 My ideas are considered even when management disagrees with them.	.641			-.324	
Q3_11 My suggestions are used to make decisions that affect me and my team	.635		-.488		
Q3_4 My impact on what happens in my department is large.	.633	-.332			
Q3_8 My job is well within the scope of my abilities.	.604		-.317		.436
Q3_15 I am shown genuine concern for my individual success	.590	.427	.408		
Q3_5 My job activities are personally meaningful to me.	.574			.404	
Q3_18 I am provided with the assistance needed to solve problems on my own	.565				
Q3_1 I am confident about my ability to do my job.	.560	-.513	.376		
Q3_6 I can decide on my own how to go about doing my own work.	.542				

© Eseigboria Grace Paula Ijasan, 2018

Q3_19 I am encouraged to solve problems with my team	.537				
Q3_16 Attention is given to my concerns and discussed patiently	.516	.411			
Q3_17 I am shown areas which need more training	.512	.359		.421	
Q3_13 Company decisions are explained to me	.487	.386		-.466	
Q3_14 I am told how my work fits into the company	.483	.470		-.372	
Q3_2 The work that I do is important to me.	.557	-.590	.397		
Q3_7 I really care about what I do on my job.	.496				.568

Extraction Method: Principal Component Analysis.
a. 5 components extracted.

Table b5

Rotated Component Matrix[a]

	Component				
	1	2	3	4	5
Q3_2 The work that I do is important to me.	.917				
Q3_1 I am confident about my ability to do my job.	.847				
Q3_3 I have significant autonomy in determining how I do my job.	.717				
Q3_4 My impact on what happens in my department is large.	.584			.340	
Q3_11 My suggestions are used to make decisions that affect me and my team		.852			
Q3_10 I am encouraged to express ideas/suggestions		.785			
Q3_12 My ideas are considered even when management disagrees with them.		.708			
Q3_9 I have considerable opportunity for independence and freedom on how I do my job.		.554		.414	
Q3_6 I can decide on my own how to go about doing my own work.		.430	.389		
Q3_17 I am shown areas which need more training			.814		
Q3_16 Attention is given to my concerns and discussed patiently			.696		
Q3_15 I am shown genuine concern for my individual success			.604		.530
Q3_18 I am provided with the assistance needed to solve problems on my own		.311	.544		
Q3_7 I really care about what I do on my job.				.769	
Q3_8 My job is well within the scope of my abilities.		.305		.736	
Q3_19 I am encouraged to solve problems with my team				.519	
Q3_5 My job activities are personally meaningful to me.	.445		.341	.477	
Q3_14 I am told how my work fits into the company					.811
Q3_13 Company decisions are explained to me					.776

Extraction Method: Principal Component Analysis.
Rotation Method: Varimax with Kaiser Normalization.[a]
a. Rotation converged in 7 iterations.

```
FACTOR
  /VARIABLES Q3_1 Q3_2 Q3_3 Q3_4 Q3_5 Q3_6 Q3_7 Q3_8 Q3_9 Q3_10 Q3_11 Q3_12
Q3_13 Q3_14 Q3_15 Q3_16 Q3_17 Q3_18 Q3_19
  /MISSING LISTWISE
  /ANALYSIS Q3_1 Q3_2 Q3_3 Q3_4 Q3_5 Q3_6 Q3_7 Q3_8 Q3_9 Q3_10 Q3_11 Q3_12
Q3_13 Q3_14 Q3_15 Q3_16 Q3_17 Q3_18 Q3_19
  /PRINT INITIAL CORRELATION SIG KMO EXTRACTION ROTATION FSCORE
  /FORMAT SORT BLANK(.30)
  /PLOT EIGEN
  /CRITERIA FACTORS(3) ITERATE(25)
  /EXTRACTION PC
  /CRITERIA ITERATE(25)
  /ROTATION VARIMAX
  /METHOD=CORRELATION.
```


© Eseigboria Grace Paula Ijasan, 2018

Factor Analysis PSY EMP. WITH 3 FACTOR RETAINED

```
[DataSet5] C:\Users\LOBUS\Desktop\Ese Ijasan (208 file) OCTOBER 2017
USING.sav
```

KMO and Bartlett's Test

Kaiser-Meyer-Olkin Measure of Sampling Adequacy.		.839
Bartlett's Test of Sphericity	Approx. Chi-Square	2246.304
	df	171
	Sig.	.000

Table b6

Communalities

	Initial	Extraction
Q3_1 I am confident about my ability to do my job.	1.000	.719
Q3_2 The work that I do is important to me.	1.000	.816
Q3_3 I have significant autonomy in determining how I do my job.	1.000	.703
Q3_4 My impact on what happens in my department is large.	1.000	.525
Q3_5 My job activities are personally meaningful to me.	1.000	.417
Q3_6 I can decide on my own how to go about doing my own work.	1.000	.321
Q3_7 I really care about what I do on my job.	1.000	.285
Q3_8 My job is well within the scope of my abilities.	1.000	.467
Q3_9 I have considerable opportunity for independence and freedom on how I do my job.	1.000	.578
Q3_10 I am encouraged to express ideas/suggestions	1.000	.651
Q3_11 My suggestions are used to make decisions that affect me and my team	1.000	.649
Q3_12 My ideas are considered even when management disagrees with them.	1.000	.478
Q3_13 Company decisions are explained to me	1.000	.455
Q3_14 I am told how my work fits into the company	1.000	.537
Q3_15 I am shown genuine concern for my individual success	1.000	.697
Q3_16 Attention is given to my concerns and discussed patiently	1.000	.516
Q3_17 I am shown areas which need more training	1.000	.435
Q3_18 I am provided with the assistance needed to solve problems on my own	1.000	.336
Q3_19 I am encouraged to solve problems with my team	1.000	.314

Extraction Method: Principal Component Analysis.

Table b7

Total Variance Explained

Component	Initial Eigenvalues			Extraction Sums of Squared Loadings			Rotation Sums of Squared Loadings		
	Total	% of Variance	Cumulative %	Total	% of Variance	Cumulative %	Total	% of Variance	Cumulative %
1	6.476	34.084	34.084	6.476	34.084	34.084	3.902	20.536	20.536

© Eseigboria Grace Paula Ijasan, 2018

2	1.845	9.710	43.793	1.845	9.710	43.793	3.047	16.035	36.572
3	1.579	8.312	52.105	1.579	8.312	52.105	2.951	15.534	52.105
4	1.157	6.087	58.192						
5	1.083	5.701	63.893						
6	.961	5.060	68.953						
7	.783	4.122	73.076						
8	.721	3.795	76.870						
9	.628	3.303	80.173						
10	.584	3.075	83.248						
11	.572	3.010	86.258						
12	.509	2.681	88.939						
13	.424	2.231	91.170						
14	.377	1.984	93.155						
15	.347	1.826	94.981						
16	.324	1.704	96.685						
17	.296	1.559	98.243						
18	.212	1.117	99.360						
19	.122	.640	100.000						

Extraction Method: Principal Component Analysis.

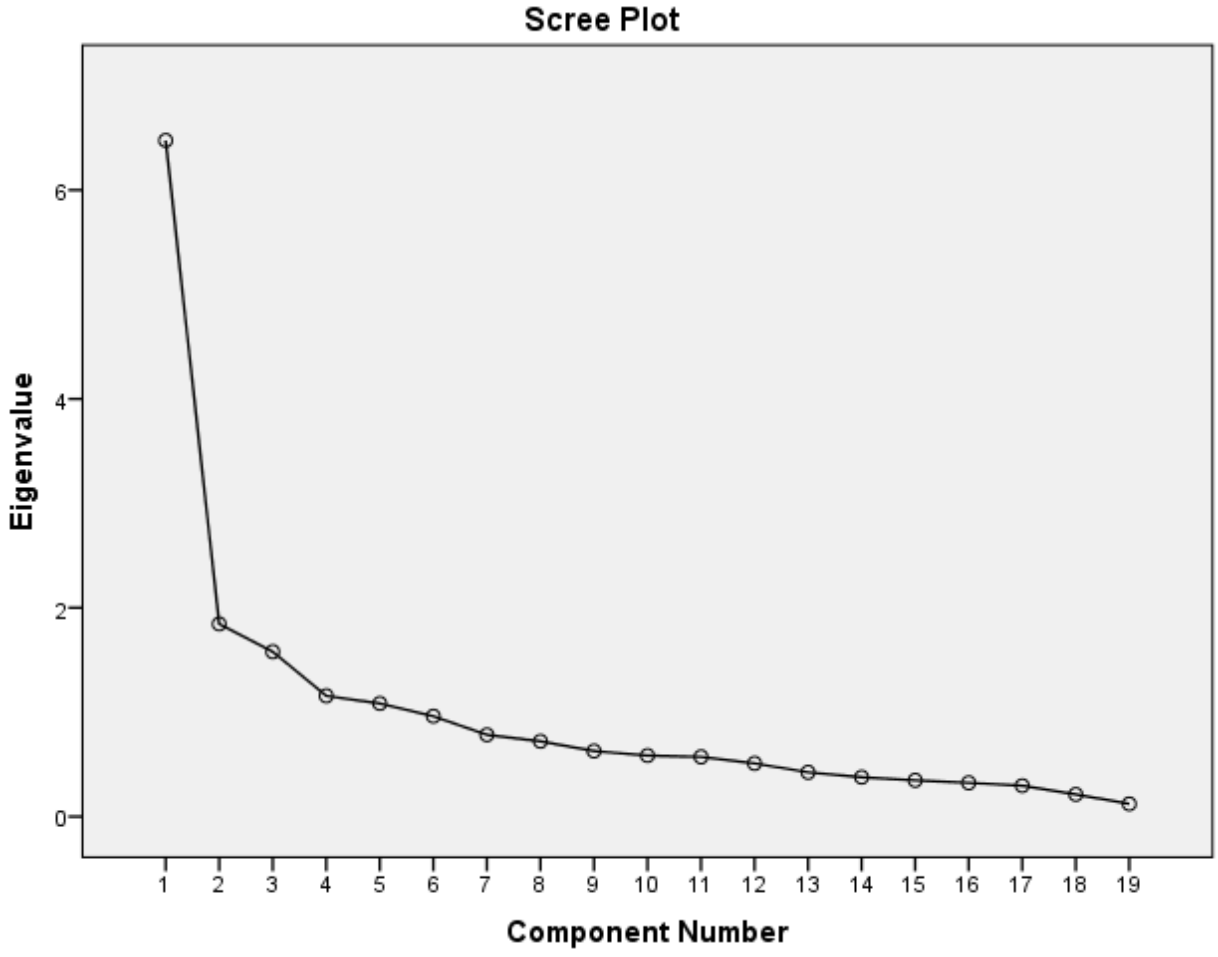

Table b8

© Eseigboria Grace Paula Ijasan, 2018

Component Matrix[a]

	Component		
	1	2	3
Q3_3 I have significant autonomy in determining how I do my job.	.727	-.384	
Q3_9 I have considerable opportunity for independence and freedom on how I do my job.	.702		
Q3_10 I am encouraged to express ideas/suggestions	.653		-.471
Q3_12 My ideas are considered even when management disagrees with them.	.641		
Q3_11 My suggestions are used to make decisions that affect me and my team	.635		-.488
Q3_4 My impact on what happens in my department is large.	.633	-.332	
Q3_8 My job is well within the scope of my abilities.	.604		-.317
Q3_15 I am shown genuine concern for my individual success	.590	.427	.408
Q3_5 My job activities are personally meaningful to me.	.574		
Q3_18 I am provided with the assistance needed to solve problems on my own	.565		
Q3_1 I am confident about my ability to do my job.	.560	-.513	.376
Q3_6 I can decide on my own how to go about doing my own work.	.542		
Q3_19 I am encouraged to solve problems with my team	.537		
Q3_16 Attention is given to my concerns and discussed patiently	.516	.411	
Q3_17 I am shown areas which need more training	.512	.359	
Q3_7 I really care about what I do on my job.	.496		
Q3_13 Company decisions are explained to me	.487	.386	
Q3_14 I am told how my work fits into the company	.483	.470	
Q3_2 The work that I do is important to me.	.557	-.590	.397

Extraction Method: Principal Component Analysis.
a. 3 components extracted.

Table b9

Rotated Component Matrix[a]

	Component		
	1	2	3
Q3_11 My suggestions are used to make decisions that affect me and my team	.795		
Q3_10 I am encouraged to express ideas/suggestions	.793		
Q3_9 I have considerable opportunity for independence and freedom on how I do my job.	.692		
Q3_8 My job is well within the scope of my abilities.	.644		
Q3_12 My ideas are considered even when management disagrees with them.	.629		
Q3_6 I can decide on my own how to go about doing my own work.	.491		
Q3_7 I really care about what I do on my job.	.482		
Q3_19 I am encouraged to solve problems with my team	.470		
Q3_2 The work that I do is important to me.		.897	
Q3_1 I am confident about my ability to do my job.		.833	
Q3_3 I have significant autonomy in determining how I do my job.	.365	.731	
Q3_4 My impact on what happens in my department is large.	.335	.624	
Q3_5 My job activities are personally meaningful to me.	.370	.520	
Q3_15 I am shown genuine concern for my individual success			.805
Q3_14 I am told how my work fits into the company			.717

© Eseigboria Grace Paula Ijasan, 2018

Q3_16 Attention is given to my concerns and discussed patiently			.691
Q3_13 Company decisions are explained to me			.648
Q3_17 I am shown areas which need more training			.615
Q3_18 I am provided with the assistance needed to solve problems on my own	.347		.395

Extraction Method: Principal Component Analysis.
Rotation Method: Varimax with Kaiser Normalization.[a]
a. Rotation converged in 5 iterations.

```
RELIABILITY
  /VARIABLES=Q3_11 Q3_10 Q3_9 Q3_8 Q3_6 Q3_7 Q3_19 Q3_12
  /SCALE('PSY EMP. FAC1') ALL
  /MODEL=ALPHA
  /SUMMARY=TOTAL CORR.
```

Reliability

```
[DataSet5] C:\Users\LOBUS\Desktop\Ese Ijasan (208 file) OCTOBER 2017
USING.sav
```

Scale: PSY EMP. FAC1

Case Processing Summary

		N	%
Cases	Valid	270	100.0
	Excluded[a]	0	.0
	Total	270	100.0

a. Listwise deletion based on all variables in the procedure.

Reliability Statistics

Cronbach's Alpha	Cronbach's Alpha Based on Standardized Items	N of Items
.829	.830	8

Summary Item Statistics

	Mean	Minimum	Maximum	Range	Maximum / Minimum	Variance	N of Items
Inter-Item Correlations	.379	.202	.688	.485	3.398	.014	8

Item-Total Statistics

	Scale Mean if Item Deleted	Scale Variance if Item Deleted	Corrected Item-Total Correlation	Squared Multiple Correlation	Cronbach's Alpha if Item Deleted
Q3_11 My suggestions are used to make decisions that affect me and my team	38.978	17.806	.669	.593	.793

© Eseigboria Grace Paula Ijasan, 2018

Q3_10 I am encouraged to express ideas/suggestions	38.978	17.769	.678	.567	.792
Q3_9 I have considerable opportunity for independence and freedom on how I do my job.	38.759	17.923	.653	.471	.795
Q3_8 My job is well within the scope of my abilities .	38.574	19.279	.572	.420	.808
Q3_6 I can decide on my own how to go about do ing my own work.	39.056	19.079	.446	.211	.825
Q3_7 I really care about what I do on my job.	38.619	19.962	.426	.233	.825
Q3_19 I am encouraged to solve problems with my team	38.619	20.705	.440	.246	.823
Q3_12 My ideas are considered even when management disagrees with them.	39.167	17.470	.571	.425	.809

```
RELIABILITY
  /VARIABLES=Q3_2 Q3_1 Q3_3 Q3_4 Q3_5
  /SCALE('PSY EMP. FAC2') ALL
  /MODEL=ALPHA
  /SUMMARY=TOTAL CORR.
```

Reliability

```
[DataSet5] C:\Users\LOBUS\Desktop\Ese Ijasan (208 file) OCTOBER 2017
USING.sav
```

Scale: PSY EMP. FAC2

Case Processing Summary

		N	%
Cases	Valid	270	100.0
	Excluded[a]	0	.0
	Total	270	100.0

a. Listwise deletion based on all variables in the procedure.

Reliability Statistics

Cronbach's Alpha	Cronbach's Alpha Based on Standardized Items	N of Items
.841	.840	5

Summary Item Statistics

	Mean	Minimum	Maximum	Range	Maximum / Minimum	Variance	N of Items
Inter-Item Correlations	.512	.319	.831	.512	2.609	.025	5

© Eseigboria Grace Paula Ijasan, 2018

Item-Total Statistics

	Scale Mean if Item Deleted	Scale Variance if Item Deleted	Corrected Item-Total Correlation	Squared Multiple Correlation	Cronbach's Alpha if Item Deleted
Q3_2 The work that I do is important to me.	23.274	7.865	.710	.760	.790
Q3_1 I am confident about my ability to do my job.	23.219	8.558	.642	.697	.810
Q3_3 I have significant autonomy in determining how I do my job.	23.459	7.744	.742	.600	.780
Q3_4 My impact on what happens in my department is large.	23.652	8.339	.623	.478	.815
Q3_5 My job activities are personally meaningful to me.	23.730	8.956	.514	.345	.843

```
RELIABILITY
  /VARIABLES=Q3_15 Q3_14 Q3_16 Q3_13 Q3_17 Q3_18
  /SCALE('PSY EMP. FAC3') ALL
  /MODEL=ALPHA
  /SUMMARY=TOTAL CORR.
```

Reliability

```
[DataSet5] C:\Users\LOBUS\Desktop\Ese Ijasan (208 file) OCTOBER 2017
USING.sav
```

Scale: PSY EMP. FAC3

Case Processing Summary

		N	%
Cases	Valid	270	100.0
	Excluded[a]	0	.0
	Total	270	100.0

a. Listwise deletion based on all variables in the procedure.

Reliability Statistics

Cronbach's Alpha	Cronbach's Alpha Based on Standardized Items	N of Items
.782	.782	6

Summary Item Statistics

	Mean	Minimum	Maximum	Range	Maximum / Minimum	Variance	N of Items

© Eseigboria Grace Paula Ijasan, 2018

Inter-Item Correlations	.374	.208	.554	.345	2.657	.015	6

Item-Total Statistics

	Scale Mean if Item Deleted	Scale Variance if Item Deleted	Corrected Item-Total Correlation	Squared Multiple Correlation	Cronbach's Alpha if Item Deleted
Q3_15 I am shown genuine concern for my individual success	27.385	10.007	.681	.501	.710
Q3_14 I am told how my work fits into the company	27.422	10.691	.528	.431	.749
Q3_16 Attention is given to my concerns and discussed patiently	27.430	10.752	.549	.372	.744
Q3_13 Company decisions are explained to me	27.437	10.968	.490	.340	.758
Q3_17 I am shown areas which need more training	27.367	10.687	.528	.364	.749
Q3_18 I am provided with the assistance needed to solve problems on my own	27.404	11.312	.411	.223	.778

APPENDIX 4
EFA AND RELAIBILITY FOR ORGANISATION DIVERSITY

```
FACTOR
  /VARIABLES Q4_1 Q4_2 Q4_3 Q4_4 Q4_5 Q4_6
  /MISSING LISTWISE
  /ANALYSIS Q4_1 Q4_2 Q4_3 Q4_4 Q4_5 Q4_6
  /PRINT INITIAL CORRELATION SIG KMO EXTRACTION ROTATION FSCORE
  /FORMAT SORT BLANK(.30)
  /PLOT EIGEN
  /CRITERIA MINEIGEN(1) ITERATE(25)
  /EXTRACTION PC
  /CRITERIA ITERATE(25)
  /ROTATION VARIMAX
  /METHOD=CORRELATION.
```

Factor Analysis

```
[DataSet5] C:\Users\LOBUS\Desktop\Ese Ijasan (208 file) OCTOBER 2017
USING.sav
```

KMO and Bartlett's Test

Kaiser-Meyer-Olkin Measure of Sampling Adequacy.	.624

© Eseigboria Grace Paula Ijasan, 2018

Bartlett's Test of Sphericity	Approx. Chi-Square	245.928
	df	15
	Sig.	.000

Communalities

	Initial	Extraction
Q4_1 Q4. With the implementation of BEE - People now see members as equals	1.000	.571
Q4_2 Q4. With the implementation of BEE - People see each other beyond physical characteristics	1.000	.729
Q4_3 Q4. With the implementation of BEE - People have better relationship with others	1.000	.487
Q4_4 Q4. With the implementation of BEE - People see me as an asset and not a liability	1.000	.497
Q4_5 Q4. With the implementation of BEE - People are more confident about being treated fairly	1.000	.645
Q4_6 Q4. With the implementation of BEE - I see a clear progression in my career	1.000	.604

Extraction Method: Principal Component Analysis.

Total Variance Explained

Component	Initial Eigenvalues			Extraction Sums of Squared Loadings			Rotation Sums of Squared Loadings		
	Total	% of Variance	Cumulative %	Total	% of Variance	Cumulative %	Total	% of Variance	Cumulative %
1	2.042	34.038	34.038	2.042	34.038	34.038	1.866	31.098	31.098
2	1.492	24.861	58.899	1.492	24.861	58.899	1.668	27.801	58.899
3	.826	13.771	72.670						
4	.635	10.582	83.252						
5	.566	9.437	92.689						
6	.439	7.311	100.000						

Extraction Method: Principal Component Analysis.

© Eseigboria Grace Paula Ijasan, 2018

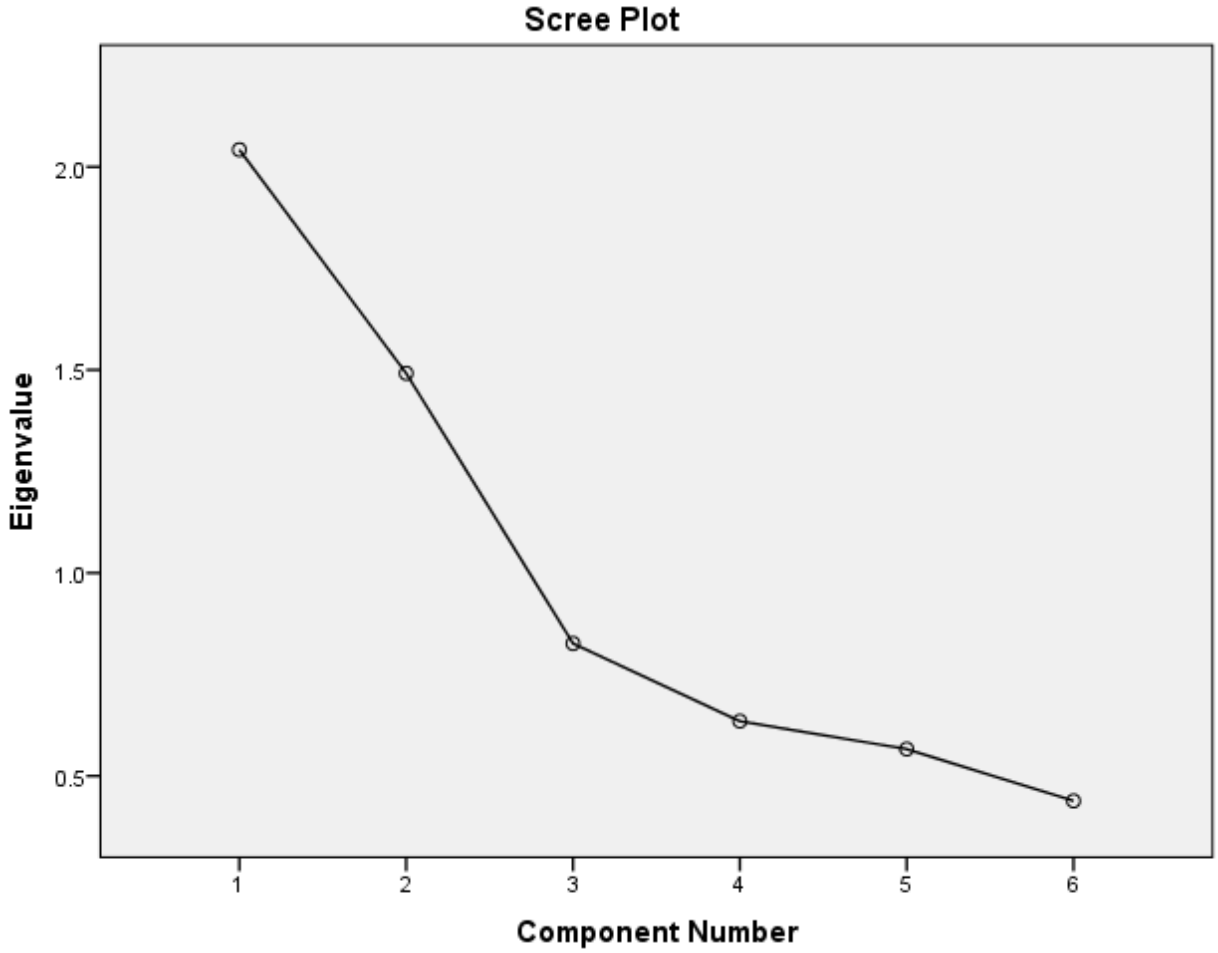

Component Matrix[a]

	Component	
	1	2
Q4_2 Q4. With the implementation of BEE - People see each other beyond physical characteristics	.698	-.491
Q4_3 Q4. With the implementation of BEE - People have better relationship with others	.694	
Q4_4 Q4. With the implementation of BEE - People see me as an asset and not a liability	.684	
Q4_6 Q4. With the implementation of BEE - I see a clear progression in my career	.379	.679
Q4_5 Q4. With the implementation of BEE - People are more confident about being treated fairly	.459	.659
Q4_1 Q4. With the implementation of BEE - People now see members as equals	.501	-.566

Extraction Method: Principal Component Analysis.
a. 2 components extracted.

Rotated Component Matrix[a]

	Component	
	1	2

© Eseigboria Grace Paula Ijasan, 2018

Q4_2 Q4. With the implementation of BEE - People see each other beyond physical characteristics	.854	
Q4_1 Q4. With the implementation of BEE - People now see members as equals	.733	
Q4_3 Q4. With the implementation of BEE - People have better relationship with others	.614	.333
Q4_5 Q4. With the implementation of BEE - People are more confident about being treated fairly		.803
Q4_6 Q4. With the implementation of BEE - I see a clear progression in my career		.774
Q4_4 Q4. With the implementation of BEE - People see me as an asset and not a liability	.467	.528

Extraction Method: Principal Component Analysis.
Rotation Method: Varimax with Kaiser Normalization.[a]
a. Rotation converged in 3 iterations.

Component Transformation Matrix

Component	1	2
1	.824	.566
2	-.566	.824

Extraction Method: Principal Component Analysis.
Rotation Method: Varimax with Kaiser Normalization.

```
RELIABILITY
  /VARIABLES=Q4_2 Q4_1 Q4_3
  /SCALE('ORG. DIVERSITY FAC1') ALL
  /MODEL=ALPHA
  /SUMMARY=TOTAL CORR.
```

Reliability

```
[DataSet5] C:\Users\LOBUS\Desktop\Ese Ijasan (208 file) OCTOBER 2017
USING.sav
```

Scale: ORG. DIVERSITY FAC1

Case Processing Summary

		N	%
Cases	Valid	270	100.0
	Excluded[a]	0	.0
	Total	270	100.0

a. Listwise deletion based on all variables in the procedure.

Reliability Statistics

Cronbach's Alpha	Cronbach's Alpha Based on Standardized Items	N of Items
.616	.621	3

© Eseigboria Grace Paula Ijasan, 2018

Summary Item Statistics

	Mean	Minimum	Maximum	Range	Maximum / Minimum	Variance	N of Items
Inter-Item Correlations	.353	.195	.492	.297	2.520	.018	3

Item-Total Statistics

	Scale Mean if Item Deleted	Scale Variance if Item Deleted	Corrected Item-Total Correlation	Squared Multiple Correlation	Cronbach's Alpha if Item Deleted
Q4_2 Q4. With the implementation of BEE - People see each other beyond physical characteristics	9.944	4.283	.566	.322	.289
Q4_1 Q4. With the implementation of BEE - People now see members as equals	9.941	4.115	.449	.243	.507
Q4_3 Q4. With the implementation of BEE - People have better relationship with others	9.611	7.331	.322	.139	.657

```
RELIABILITY
  /VARIABLES=Q4_5 Q4_6 Q4_4
  /SCALE('ORG. DIVERSITY FAC2') ALL
  /MODEL=ALPHA
  /SUMMARY=TOTAL CORR.
```

Reliability

```
[DataSet5] C:\Users\LOBUS\Desktop\Ese Ijasan (208 file) OCTOBER 2017
USING.sav
```

Scale: ORG. DIVERSITY FAC2

Case Processing Summary

		N	%
Cases	Valid	270	100.0
	Excluded[a]	0	.0
	Total	270	100.0

a. Listwise deletion based on all variables in the procedure.

Reliability Statistics

Cronbach's Alpha	Cronbach's Alpha Based on Standardized Items	N of Items
.555	.565	3

© Eseigboria Grace Paula Ijasan, 2018

Summary Item Statistics

	Mean	Minimum	Maximum	Range	Maximum / Minimum	Variance	N of Items
Inter-Item Correlations	.302	.209	.428	.219	2.050	.010	3

Item-Total Statistics

	Scale Mean if Item Deleted	Scale Variance if Item Deleted	Corrected Item-Total Correlation	Squared Multiple Correlation	Cronbach's Alpha if Item Deleted
Q4_5 Q4. With the implementation of BEE - People are more confident about being treated fairly	10.811	1.938	.436	.217	.340
Q4_6 Q4. With the implementation of BEE - I see a clear progression in my career	10.722	2.194	.392	.193	.421
Q4_4 Q4. With the implementation of BEE - People see me as an asset and not a liability	10.881	2.016	.284	.083	.598

```
RELIABILITY
  /VARIABLES=Q4_5 Q4_6 Q4_4 Q4_1 Q4_2 Q4_3
  /SCALE('ORG. DIVERSITY') ALL
  /MODEL=ALPHA
  /SUMMARY=TOTAL CORR.
```

Reliability

```
[DataSet5] C:\Users\LOBUS\Desktop\Ese Ijasan (208 file) OCTOBER 2017
USING.sav
```

Scale: ORG. DIVERSITY

Case Processing Summary

		N	%
Cases	Valid	270	100.0
	Excluded[a]	0	.0
	Total	270	100.0

a. Listwise deletion based on all variables in the procedure.

Reliability Statistics

Cronbach's Alpha	Cronbach's Alpha Based on Standardized Items	N of Items
.581	.598	6

Summary Item Statistics

© Eseigboria Grace Paula Ijasan, 2018

	Mean	Minimum	Maximum	Range	Maximum / Minimum	Variance	N of Items
Inter-Item Correlations	.199	-.038	.492	.531	-12.830	.028	6

Item-Total Statistics

	Scale Mean if Item Deleted	Scale Variance if Item Deleted	Corrected Item-Total Correlation	Squared Multiple Correlation	Cronbach's Alpha if Item Deleted
Q4_5 Q4. With the implementation of BEE - People are more confident about being treated fairly	25.559	13.772	.211	.228	.575
Q4_6 Q4. With the implementation of BEE - I see a clear progression in my career	25.470	14.272	.163	.196	.588
Q4_4 Q4. With the implementation of BEE - People see me as an asset and not a liability	25.630	12.279	.387	.223	.513
Q4_1 Q4. With the implementation of BEE - People now see members as equals	26.148	9.971	.303	.248	.567
Q4_2 Q4. With the implementation of BEE - People see each other beyond physical characteristics	26.152	9.341	.489	.361	.441
Q4_3 Q4. With the implementation of BEE - People have better relationship with others	25.819	12.209	.420	.213	.502

APPENDIX FOUR
GENERAL PROFILE

```
GET
  FILE='C:\Users\LOBUS\Desktop\Ese Ijasan (208 file) OCTOBER 2017
USING.sav'.
DATASET NAME DataSet1 WINDOW=FRONT.
FREQUENCIES VARIABLES=CN S2 S3 S4 S5 S6 S7
  /STATISTICS=STDDEV MINIMUM MAXIMUM MEAN
  /ORDER=ANALYSIS.
```

Frequencies

```
[DataSet1] C:\Users\LOBUS\Desktop\Ese Ijasan (208 file) OCTOBER 2017
USING.sav
```

Statistics

		CN company name	S2 What is your current designation?	S3 Years of relevant work experience	S4 Number of years in current company	S5 Gender	S6 Race	S7 Sector that applies to your company
N	Valid	270	270	270	270	270	270	270
	Missing	0	0	0	0	0	0	0
Mean		5.00	1.674	2.178	2.189	1.485	1.870	2.000

© Eseigboria Grace Paula Ijasan, 2018

Std. Deviation	2.587	.6825	.6321	.6376	.5007	.9053	.8180
Minimum	1	1.0	1.0	1.0	1.0	1.0	1.0
Maximum	9	3.0	3.0	3.0	2.0	4.0	3.0

Frequency Table

CN company name

		Frequency	Percent	Valid Percent	Cumulative Percent
Valid	1 Barclays Bank	30	11.1	11.1	11.1
	2 Capitec Bank	30	11.1	11.1	22.2
	3 Standard Bank	30	11.1	11.1	33.3
	4 Alexander Forbes Group Holdings Ltd	30	11.1	11.1	44.4
	5 Coronation Fund Managers Ltd	30	11.1	11.1	55.6
	6 Investec Ltd	30	11.1	11.1	66.7
	7 Liberty Holdings Ltd	30	11.1	11.1	77.8
	8 Discovery Ltd	30	11.1	11.1	88.9
	9 Santam Ltd	30	11.1	11.1	100.0
	Total	270	100.0	100.0	

S2 What is your current designation?

		Frequency	Percent	Valid Percent	Cumulative Percent
Valid	1.0 Middle level management	121	44.8	44.8	44.8
	2.0 Lower level management	116	43.0	43.0	87.8
	3.0 Non-managerial	33	12.2	12.2	100.0
	Total	270	100.0	100.0	

S3 Years of relevant work experience

		Frequency	Percent	Valid Percent	Cumulative Percent
Valid	1.0 0-3	34	12.6	12.6	12.6
	2.0 4-9	154	57.0	57.0	69.6
	3.0 10 and Above	82	30.4	30.4	100.0
	Total	270	100.0	100.0	

S4 Number of years in current company

		Frequency	Percent	Valid Percent	Cumulative Percent
Valid	1.0 0-3	34	12.6	12.6	12.6
	2.0 4-9	151	55.9	55.9	68.5
	3.0 10 and Above	85	31.5	31.5	100.0
	Total	270	100.0	100.0	

S5 Gender

© Eseigboria Grace Paula Ijasan, 2018

		Frequency	Percent	Valid Percent	Cumulative Percent
Valid	1.0 Male	139	51.5	51.5	51.5
	2.0 Female	131	48.5	48.5	100.0
	Total	270	100.0	100.0	

S6 Race

		Frequency	Percent	Valid Percent	Cumulative Percent
Valid	1.0 Black	111	41.1	41.1	41.1
	2.0 White	102	37.8	37.8	78.9
	3.0 Coloured	38	14.1	14.1	93.0
	4.0 Indian	19	7.0	7.0	100.0
	Total	270	100.0	100.0	

S7 Sector that applies to your company

		Frequency	Percent	Valid Percent	Cumulative Percent
Valid	1.0 Insurance	90	33.3	33.3	33.3
	2.0 Banks	90	33.3	33.3	66.7
	3.0 Financial Services	90	33.3	33.3	100.0
	Total	270	100.0	100.0	

© Eseigboria Grace Paula Ijasan, 2018

APPENDIX FIVE
CONFIRMATORY FACTOR ANALYSIS
FIRST MODEL FOR ORGANISATIONAL DIVERSITY

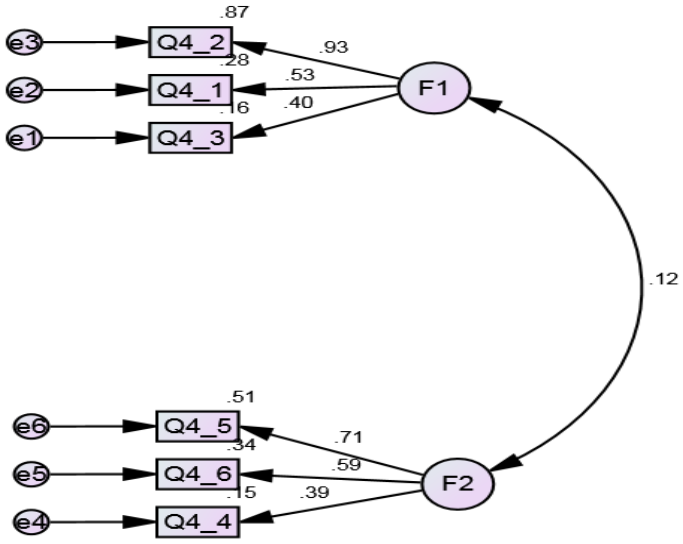

FIT MODEL INDICES FOR FIRST MODEL ORGANISATION D IVERSITY
Model Fit Summary
CMIN

Model	NPAR	CMIN	DF	P	CMIN/DF
Default model	13	54.175	8	.000	6.772
Saturated model	21	.000	0		
Independence model	6	248.546	15	.000	16.570

RMR, GFI

Model	RMR	GFI	AGFI	PGFI
Default model	.122	.941	.845	.358
Saturated model	.000	1.000		
Independence model	.334	.750	.651	.536

© Eseigboria Grace Paula Ijasan, 2018

Baseline Comparisons

Model	NFI Delta1	RFI rho1	IFI Delta2	TLI rho2	CFI
Default model	.782	.591	.808	.629	.802
Saturated model	1.000		1.000		1.000
Independence model	.000	.000	.000	.000	.000

Parsimony-Adjusted Measures

Model	PRATIO	PNFI	PCFI
Default model	.533	.417	.428
Saturated model	.000	.000	.000
Independence model	1.000	.000	.000

NCP

Model	NCP	LO 90	HI 90
Default model	46.175	26.506	73.334
Saturated model	.000	.000	.000
Independence model	233.546	186.137	288.395

FMIN

Model	FMIN	F0	LO 90	HI 90
Default model	.201	.172	.099	.273
Saturated model	.000	.000	.000	.000
Independence model	.924	.868	.692	1.072

RMSEA

Model	RMSEA	LO 90	HI 90	PCLOSE
Default model	.146	.111	.185	.000
Independence model	.241	.215	.267	.000

AIC

Model	AIC	BCC	BIC	CAIC
Default model	80.175	80.870	126.954	139.954
Saturated model	42.000	43.122	117.567	138.567
Independence model	260.546	260.867	282.137	288.137

ECVI

Model	ECVI	LO 90	HI 90	MECVI
Default model	.298	.225	.399	.301
Saturated model	.156	.156	.156	.160
Independence model	.969	.792	1.172	.970

HOELTER

Model	HOELTER .05	HOELTER .01
Default model	77	100
Independence model	28	34

FITTED MODEL FOR ORGANIZATION DIVERSITY

© Eseigboria Grace Paula Ijasan, 2018

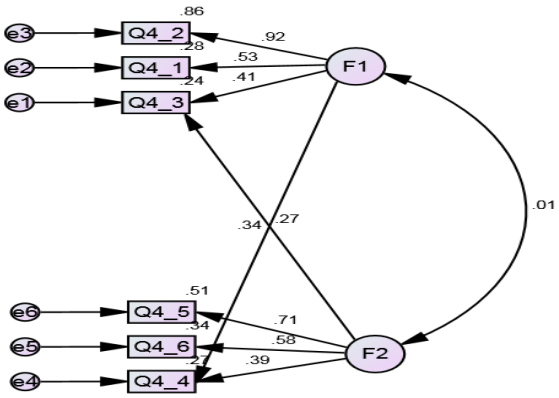

MODEL FIT PARAMETER

Model Fit Summary

Notes for Model (Default model)

Computation of degrees of freedom (Default model)

Number of distinct sample moments:	21
Number of distinct parameters to be estimated:	15
Degrees of freedom (21 - 15):	6

Result (Default model)

Minimum was achieved
Chi-square = 10.208
Degrees of freedom = 6
Probability level = .116

CMIN

Model	NPAR	CMIN	DF	P	CMIN/DF
Default model	15	10.208	6	.116	1.701
Saturated model	21	.000	0		
Independence model	6	248.546	15	.000	16.570

RMR, GFI

Model	RMR	GFI	AGFI	PGFI
Default model	.041	.987	.956	.282
Saturated model	.000	1.000		
Independence model	.334	.750	.651	.536

Baseline Comparisons

© Eseigboria Grace Paula Ijasan, 2018

Model	NFI Delta1	RFI rho1	IFI Delta2	TLI rho2	CFI
Default model	.959	.897	.983	.955	.982
Saturated model	1.000		1.000		1.000
Independence model	.000	.000	.000	.000	.000

Parsimony-Adjusted Measures

Model	PRATIO	PNFI	PCFI
Default model	.400	.384	.393
Saturated model	.000	.000	.000
Independence model	1.000	.000	.000

NCP

Model	NCP	LO 90	HI 90
Default model	4.208	.000	17.186
Saturated model	.000	.000	.000
Independence model	233.546	186.137	288.395

FMIN

Model	FMIN	F0	LO 90	HI 90
Default model	.038	.016	.000	.064
Saturated model	.000	.000	.000	.000
Independence model	.924	.868	.692	1.072

RMSEA

Model	RMSEA	LO 90	HI 90	PCLOSE
Default model	.051	.000	.103	.422
Independence model	.241	.215	.267	.000

AIC

Model	AIC	BCC	BIC	CAIC
Default model	40.208	41.010	94.185	109.185
Saturated model	42.000	43.122	117.567	138.567
Independence model	260.546	260.867	282.137	288.137

ECVI

Model	ECVI	LO 90	HI 90	MECVI
Default model	.149	.134	.198	.152
Saturated model	.156	.156	.156	.160
Independence model	.969	.792	1.172	.970

HOELTER

Model	HOELTER .05	HOELTER .01
Default model	332	444
Independence model	28	34

© Eseigboria Grace Paula Ijasan, 2018

PSYCHOLOGICAL EMPOWERMENT PATH DIAGRAM

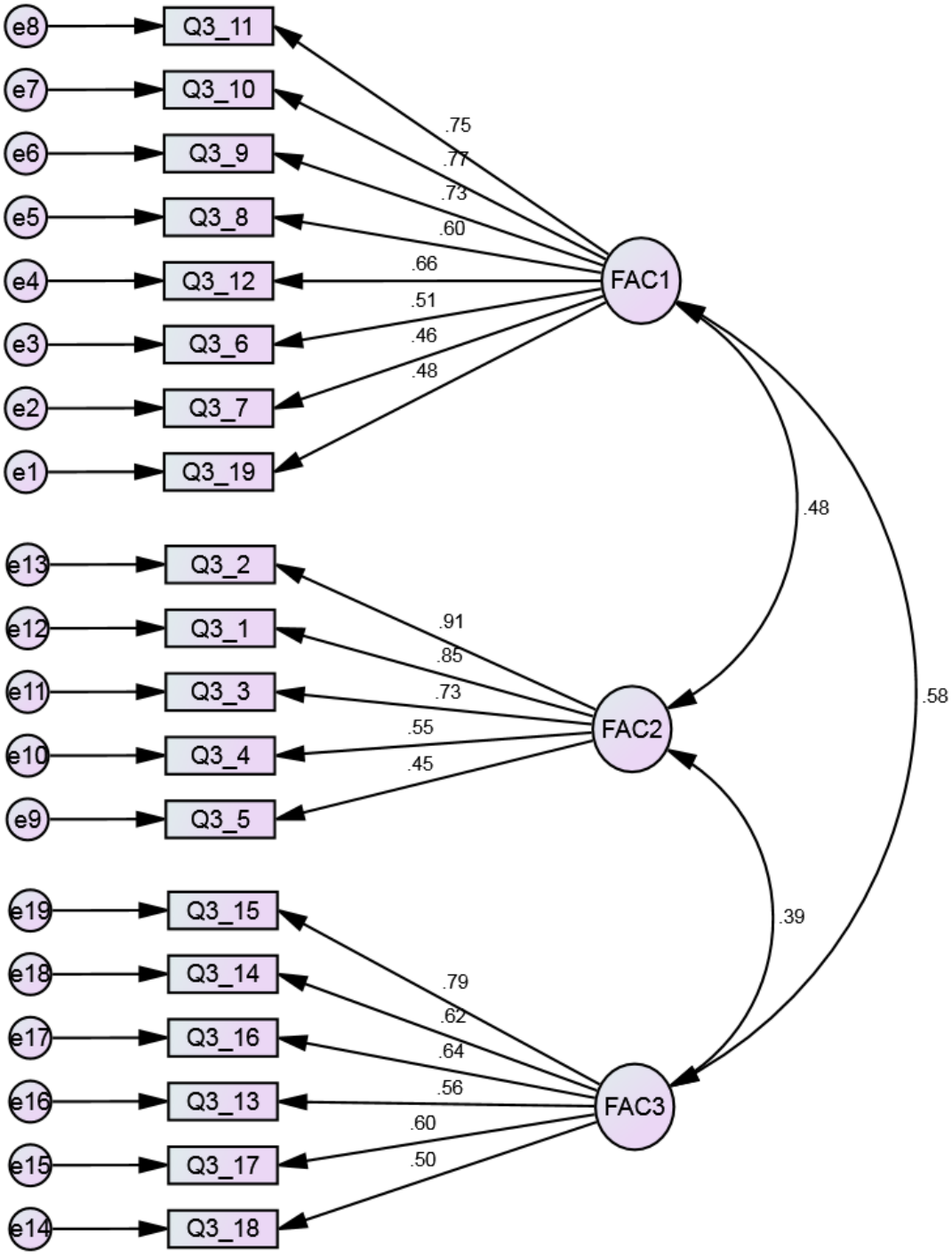

OUTPUT --- MODEL INDICES FOR PSYCHOLOGICAL EMPOWERMENT

Notes for Model (Default model)

Computation of degrees of freedom (Default model)

Number of distinct sample moments:	190
Number of distinct parameters to be estimated:	41

© Eseigboria Grace Paula Ijasan, 2018

Degrees of freedom (190 - 41): 149

Result (Default model)

Minimum was achieved
Chi-square = 620.910
Degrees of freedom = 149
Probability level = .000

Model Fit Summary

CMIN

Model	NPAR	CMIN	DF	P	CMIN/DF
Default model	41	620.910	149	.000	4.167
Saturated model	190	.000	0		
Independence model	19	2307.788	171	.000	13.496

RMR, GFI

Model	RMR	GFI	AGFI	PGFI
Default model	.078	.794	.738	.623
Saturated model	.000	1.000		
Independence model	.255	.349	.277	.314

Baseline Comparisons

Model	NFI Delta1	RFI rho1	IFI Delta2	TLI rho2	CFI
Default model	.731	.691	.781	.747	.779
Saturated model	1.000		1.000		1.000
Independence model	.000	.000	.000	.000	.000

Parsimony-Adjusted Measures

Model	PRATIO	PNFI	PCFI
Default model	.871	.637	.679
Saturated model	.000	.000	.000
Independence model	1.000	.000	.000

NCP

Model	NCP	LO 90	HI 90
Default model	471.910	398.750	552.622
Saturated model	.000	.000	.000
Independence model	2136.788	1985.343	2295.607

FMIN

Model	FMIN	F0	LO 90	HI 90
Default model	2.308	1.754	1.482	2.054
Saturated model	.000	.000	.000	.000
Independence model	8.579	7.943	7.380	8.534

RMSEA

Model	RMSEA	LO 90	HI 90	PCLOSE
Default model	.109	.100	.117	.000
Independence model	.216	.208	.223	.000

AIC

Model	AIC	BCC	BIC	CAIC
Default model	702.910	709.497	850.446	891.446
Saturated model	380.000	410.522	1063.700	1253.700
Independence model	2345.788	2348.840	2414.158	2433.158

ECVI

Model	ECVI	LO 90	HI 90	MECVI
Default model	2.613	2.341	2.913	2.638
Saturated model	1.413	1.413	1.413	1.526
Independence model	8.720	8.157	9.311	8.732

HOELTER

© Eseigboria Grace Paula Ijasan, 2018

Model	HOELTER .05	HOELTER .01
Default model	78	84
Independence model	24	26

FITTED MODEL PSYCHOLOGICAL EMPOWERMENT.

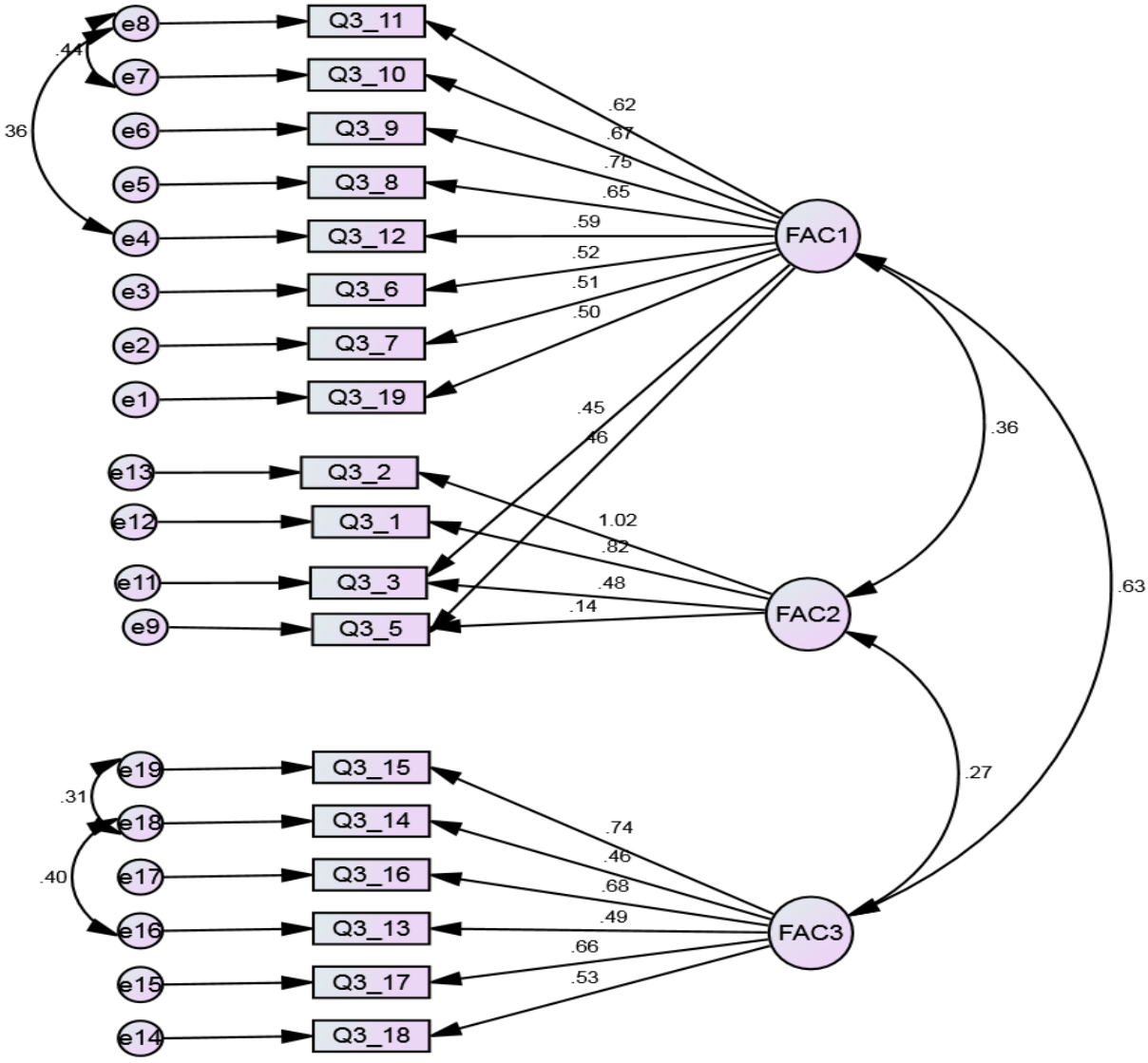

Model Fit Summary FOR FITTED PSYCHOLOGICAL EMPOWERMENT

CMIN

Model	NPAR	CMIN	DF	P	CMIN/DF
Default model	45	270.705	126	.000	2.148
Saturated model	171	.000	0		
Independence model	18	2117.100	153	.000	13.837

© Eseigboria Grace Paula Ijasan, 2018

RMR, GFI

Model	RMR	GFI	AGFI	PGFI
Default model	.048	.905	.871	.667
Saturated model	.000	1.000		
Independence model	.253	.366	.292	.328

Baseline Comparisons

Model	NFI Delta1	RFI rho1	IFI Delta2	TLI rho2	CFI
Default model	.872	.845	.927	.911	.926
Saturated model	1.000		1.000		1.000
Independence model	.000	.000	.000	.000	.000

Parsimony-Adjusted Measures

Model	PRATIO	PNFI	PCFI
Default model	.824	.718	.763
Saturated model	.000	.000	.000
Independence model	1.000	.000	.000

NCP

Model	NCP	LO 90	HI 90
Default model	144.705	101.120	196.039
Saturated model	.000	.000	.000
Independence model	1964.100	1819.137	2116.445

FMIN

Model	FMIN	F0	LO 90	HI 90
Default model	1.006	.538	.376	.729
Saturated model	.000	.000	.000	.000
Independence model	7.870	7.301	6.763	7.868

RMSEA

Model	RMSEA	LO 90	HI 90	PCLOSE
Default model	.065	.055	.076	.010
Independence model	.218	.210	.227	.000

AIC

Model	AIC	BCC	BIC	CAIC
Default model	360.705	367.545	522.634	567.634
Saturated model	342.000	367.992	957.330	1128.330
Independence model	2153.100	2155.836	2217.871	2235.871

ECVI

Model	ECVI	LO 90	HI 90	MECVI
Default model	1.341	1.179	1.532	1.366
Saturated model	1.271	1.271	1.271	1.368
Independence model	8.004	7.465	8.570	8.014

HOELTER

Model	HOELTER .05	HOELTER .01
Default model	153	165
Independence model	24	25

TRYING TO FIT THE MODEL

© Eseigboria Grace Paula Ijasan, 2018

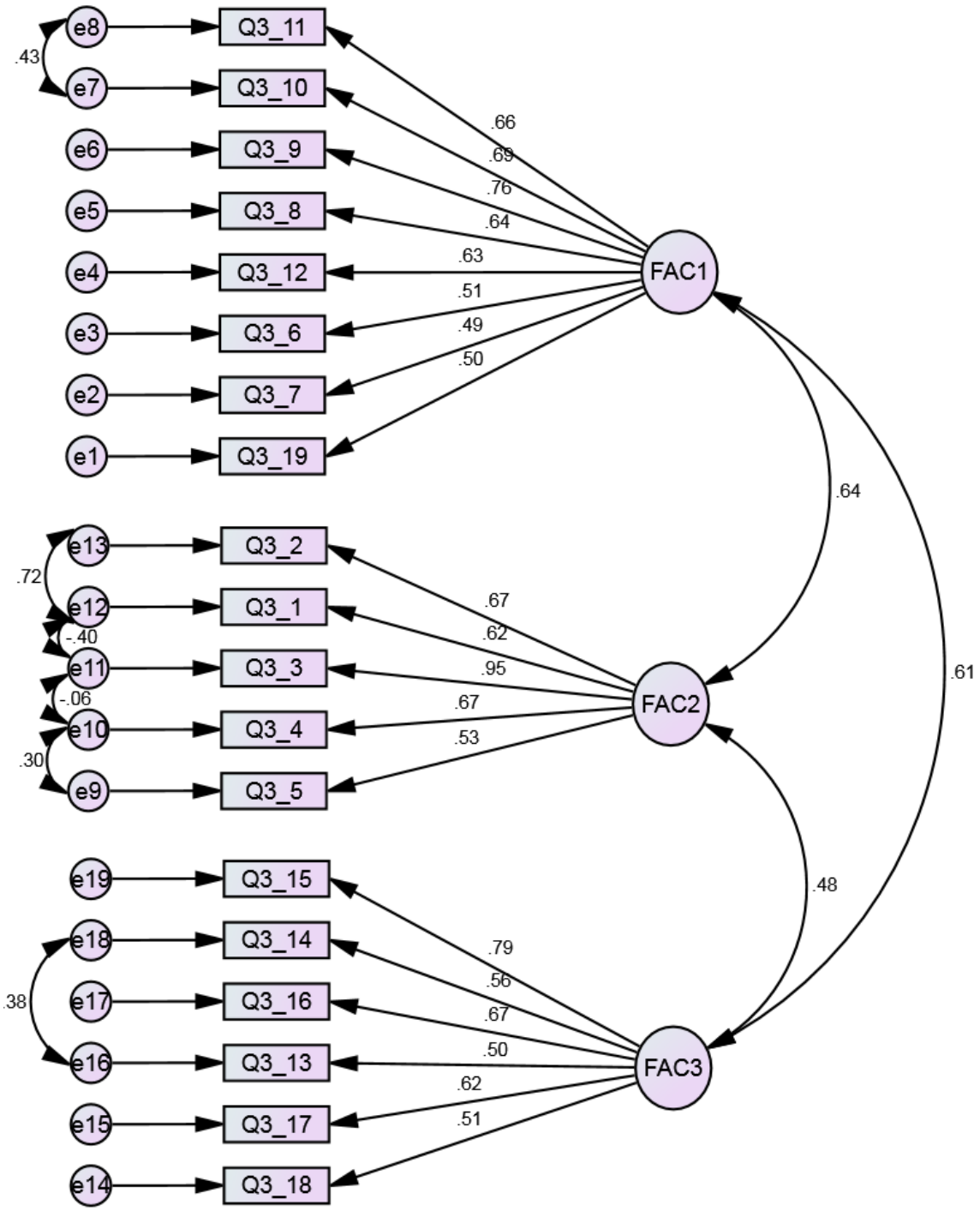

Notes for Model (Default model)
Computation of degrees of freedom (Default model)

Number of distinct sample moments:	190
Number of distinct parameters to be estimated:	47
Degrees of freedom (190 - 47):	143

Result (Default model)
Minimum was achieved

© Eseigboria Grace Paula Ijasan, 2018

Chi-square = 334.335
Degrees of freedom = 143
Probability level = .000

Model Fit Summary

CMIN

Model	NPAR	CMIN	DF	P	CMIN/DF
Default model	47	334.335	143	.000	2.338
Saturated model	190	.000	0		
Independence model	19	2307.788	171	.000	13.496

RMR, GFI

Model	RMR	GFI	AGFI	PGFI
Default model	.052	.890	.853	.669
Saturated model	.000	1.000		
Independence model	.255	.349	.277	.314

Baseline Comparisons

Model	NFI Delta1	RFI rho1	IFI Delta2	TLI rho2	CFI
Default model	.855	.827	.912	.893	.910
Saturated model	1.000		1.000		1.000
Independence model	.000	.000	.000	.000	.000

Parsimony-Adjusted Measures

Model	PRATIO	PNFI	PCFI
Default model	.836	.715	.761
Saturated model	.000	.000	.000
Independence model	1.000	.000	.000

NCP

Model	NCP	LO 90	HI 90
Default model	191.335	141.814	248.570
Saturated model	.000	.000	.000
Independence model	2136.788	1985.343	2295.607

FMIN

Model	FMIN	F0	LO 90	HI 90
Default model	1.243	.711	.527	.924
Saturated model	.000	.000	.000	.000
Independence model	8.579	7.943	7.380	8.534

RMSEA

Model	RMSEA	LO 90	HI 90	PCLOSE
Default model	.071	.061	.080	.000
Independence model	.216	.208	.223	.000

AIC

Model	AIC	BCC	BIC	CAIC
Default model	428.335	435.885	597.461	644.461
Saturated model	380.000	410.522	1063.700	1253.700
Independence model	2345.788	2348.840	2414.158	2433.158

ECVI

Model	ECVI	LO 90	HI 90	MECVI
Default model	1.592	1.408	1.805	1.620
Saturated model	1.413	1.413	1.413	1.526
Independence model	8.720	8.157	9.311	8.732

HOELTER

© Eseigboria Grace Paula Ijasan, 2018

Model	HOELTER .05	HOELTER .01
Default model	139	150
Independence model	24	26

Estimates (Group number 1 - Default model)
Scalar Estimates (Group number 1 - Default model)
Maximum Likelihood Estimates
Regression Weights: (Group number 1 - Default model)

			Estimate	S.E.	C.R.	P	Label
Q3_19	<---	FAC1	1.000				
Q3_7	<---	FAC1	1.256	.202	6.223	***	
Q3_6	<---	FAC1	1.507	.238	6.342	***	
Q3_12	<---	FAC1	1.876	.276	6.799	***	
Q3_8	<---	FAC1	1.518	.210	7.221	***	
Q3_9	<---	FAC1	2.037	.264	7.725	***	
Q3_10	<---	FAC1	1.800	.247	7.296	***	
Q3_11	<---	FAC1	1.659	.237	6.998	***	
Q3_3	<---	FAC2	.468	.051	9.089	***	
Q3_1	<---	FAC2	.730	.047	15.621	***	
Q3_2	<---	FAC2	1.000				
Q3_18	<---	FAC3	1.000				
Q3_17	<---	FAC3	1.229	.169	7.251	***	
Q3_13	<---	FAC3	.893	.149	6.011	***	
Q3_16	<---	FAC3	1.225	.166	7.388	***	
Q3_14	<---	FAC3	.861	.151	5.681	***	
Q3_15	<---	FAC3	1.358	.177	7.669	***	
Q3_3	<---	FAC1	1.219	.192	6.363	***	
Q3_5	<---	FAC1	1.193	.209	5.707	***	
Q3_5	<---	FAC2	.134	.053	2.516	.012	

Standardized Regression Weights: (Group number 1 - Default model)

			Estimate
Q3_19	<---	FAC1	.503
Q3_7	<---	FAC1	.508
Q3_6	<---	FAC1	.524
Q3_12	<---	FAC1	.587
Q3_8	<---	FAC1	.655
Q3_9	<---	FAC1	.755
Q3_10	<---	FAC1	.668
Q3_11	<---	FAC1	.620
Q3_3	<---	FAC2	.477
Q3_1	<---	FAC2	.818
Q3_2	<---	FAC2	1.017
Q3_18	<---	FAC3	.533
Q3_17	<---	FAC3	.657
Q3_13	<---	FAC3	.487
Q3_16	<---	FAC3	.682
Q3_14	<---	FAC3	.464
Q3_15	<---	FAC3	.742
Q3_3	<---	FAC1	.449
Q3_5	<---	FAC1	.463
Q3_5	<---	FAC2	.144

Covariances: (Group number 1 - Default model)

© Eseigboria Grace Paula Ijasan, 2018

			Estimate	S.E.	C.R.	P	Label
FAC1	<-->	FAC2	.116	.026	4.469	***	
FAC1	<-->	FAC3	.109	.022	4.930	***	
FAC2	<-->	FAC3	.129	.036	3.594	***	
e7	<-->	e8	.216	.035	6.153	***	
e16	<-->	e18	.267	.044	6.042	***	
e4	<-->	e8	.231	.041	5.670	***	
e18	<-->	e19	.158	.037	4.210	***	

Correlations: (Group number 1 - Default model)

			Estimate
FAC1	<-->	FAC2	.358
FAC1	<-->	FAC3	.633
FAC2	<-->	FAC3	.271
e7	<-->	e8	.440
e16	<-->	e18	.404
e4	<-->	e8	.364
e18	<-->	e19	.311

Variances: (Group number 1 - Default model)

	Estimate	S.E.	C.R.	P	Label
FAC1	.117	.029	4.097	***	
FAC2	.900	.087	10.387	***	
FAC3	.252	.059	4.229	***	
e1	.346	.032	10.924	***	
e2	.531	.049	10.904	***	
e3	.705	.065	10.846	***	
e4	.784	.074	10.542	***	
e5	.360	.036	10.095	***	
e6	.368	.041	8.940	***	
e7	.470	.047	9.972	***	
e8	.516	.048	10.722	***	
e9	.559	.051	10.993	***	
e11	.362	.035	10.310	***	
e12	.237	.031	7.705	***	
e13	-.029	.043	-.674	.501	
e14	.635	.061	10.457	***	
e15	.499	.053	9.375	***	
e16	.647	.060	10.706	***	
e17	.434	.048	9.052	***	
e18	.678	.062	10.878	***	
e19	.379	.047	8.009	***	

Matrices (Group number 1 - Default model)

CFA FOR OCAI (MAXIMUM LIKELIHOO EXTRACTION)

© Eseigboria Grace Paula Ijasan, 2018

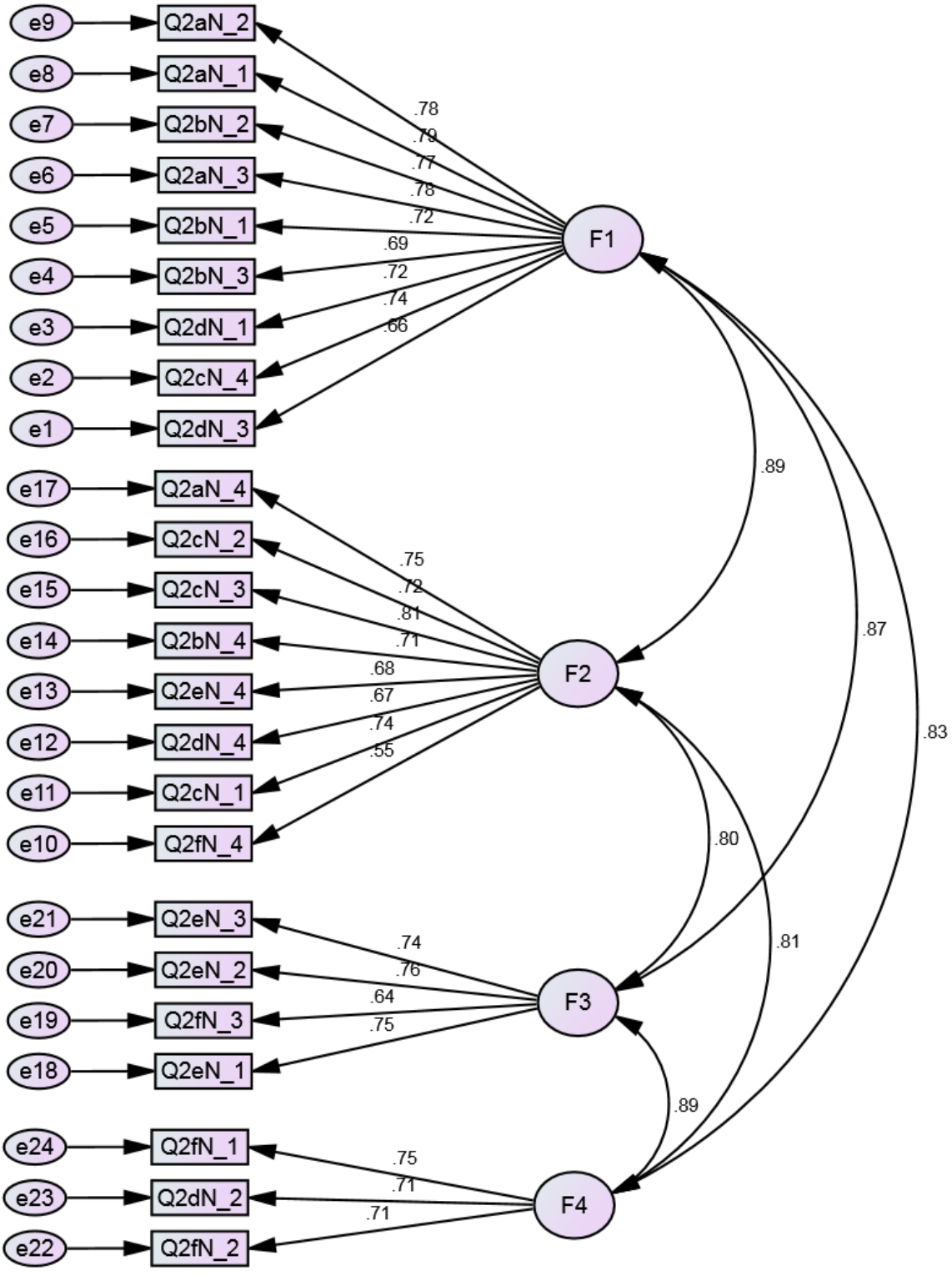

MODEL FIT

Model Fit Summary

CMIN

Model	NPAR	CMIN	DF	P	CMIN/DF
Default model	54	579.672	246	.000	2.356
Saturated model	300	.000	0		
Independence model	24	4086.832	276	.000	14.807

© Eseigboria Grace Paula Ijasan, 2018

RMR, GFI

Model	RMR	GFI	AGFI	PGFI
Default model	.076	.849	.816	.696
Saturated model	.000	1.000		
Independence model	.716	.162	.089	.149

Baseline Comparisons

Model	NFI Delta1	RFI rho1	IFI Delta2	TLI rho2	CFI
Default model	.858	.841	.913	.902	.912
Saturated model	1.000		1.000		1.000
Independence model	.000	.000	.000	.000	.000

Parsimony-Adjusted Measures

Model	PRATIO	PNFI	PCFI
Default model	.891	.765	.813
Saturated model	.000	.000	.000
Independence model	1.000	.000	.000

NCP

Model	NCP	LO 90	HI 90
Default model	333.672	267.189	407.862
Saturated model	.000	.000	.000
Independence model	3810.832	3607.680	4021.284

FMIN

Model	FMIN	F0	LO 90	HI 90
Default model	2.155	1.240	.993	1.516
Saturated model	.000	.000	.000	.000
Independence model	15.193	14.167	13.411	14.949

RMSEA

Model	RMSEA	LO 90	HI 90	PCLOSE
Default model	.071	.064	.079	.000
Independence model	.227	.220	.233	.000

AIC

Model	AIC	BCC	BIC	CAIC
Default model	687.672	698.738	881.987	935.987
Saturated model	600.000	661.475	1679.527	1979.527
Independence model	4134.832	4139.750	4221.194	4245.194

ECVI

Model	ECVI	LO 90	HI 90	MECVI
Default model	2.556	2.309	2.832	2.598
Saturated model	2.230	2.230	2.230	2.459
Independence model	15.371	14.616	16.153	15.389

HOELTER

Model	HOELTER .05	HOELTER .01
Default model	132	140
Independence model	21	22

Modification Indices (Group number 1 - Default model)

Covariances: (Group number 1 - Default model)

			M.I.	Par Change
e23	<-->	F1	18.250	.098
e22	<-->	F3	5.784	.079
e22	<-->	F1	7.019	-.061
e22	<-->	e24	4.396	.095
e21	<-->	e22	4.481	.101

© Eseigboria Grace Paula Ijasan, 2018

			M.I.	Par Change
e19	<-->	e22	6.610	.137
e19	<-->	e20	4.720	-.105
e17	<-->	F3	7.464	-.091
e17	<-->	F1	5.336	.053
e17	<-->	e24	4.163	-.094
e16	<-->	e24	8.252	.127
e15	<-->	F1	5.352	.051
e13	<-->	F3	14.990	.140
e13	<-->	F1	10.589	-.082
e13	<-->	e21	14.624	.200
e12	<-->	e18	7.262	.144
e12	<-->	e14	4.576	.131
e11	<-->	F4	5.523	.077
e11	<-->	F2	6.360	-.058
e11	<-->	e16	9.598	.141
e11	<-->	e13	6.332	-.130
e10	<-->	F3	5.569	.100
e10	<-->	F1	12.774	-.105
e10	<-->	e24	4.200	.120
e10	<-->	e19	24.891	.337
e10	<-->	e18	5.089	-.138
e10	<-->	e13	6.553	.176
e10	<-->	e11	5.172	-.137
e9	<-->	F4	10.817	-.102
e9	<-->	F1	6.538	.052
e9	<-->	e22	6.038	-.110
e8	<-->	F3	4.529	.065
e8	<-->	e20	4.069	.085
e8	<-->	e14	6.030	-.125
e8	<-->	e9	17.064	.168
e7	<-->	e24	4.355	-.088
e7	<-->	e18	4.253	.091
e7	<-->	e13	4.751	-.108
e7	<-->	e10	6.435	-.147
e6	<-->	F2	5.946	.057
e6	<-->	e17	15.883	.188
e6	<-->	e11	7.920	.128
e6	<-->	e10	4.137	-.122
e5	<-->	e21	5.254	-.107
e5	<-->	e13	11.614	-.179
e5	<-->	e7	17.360	.184
e4	<-->	F3	8.862	-.108
e4	<-->	e23	4.570	.114
e4	<-->	e18	5.239	-.120
e4	<-->	e14	8.541	.175
e3	<-->	F4	19.155	.149
e3	<-->	e24	5.072	.103
e3	<-->	e23	22.476	.231
e3	<-->	e14	6.734	-.142
e2	<-->	F2	5.769	.058
e2	<-->	e23	4.542	-.103
e2	<-->	e15	8.949	.142

© Eseigboria Grace Paula Ijasan, 2018

			M.I.	Par Change
e1	<-->	F4	4.312	.072
e1	<-->	e23	12.406	.175
e1	<-->	e17	4.259	-.103
e1	<-->	e12	25.734	.283
e1	<-->	e6	4.679	-.103
e1	<-->	e2	7.811	-.138

Variances: (Group number 1 - Default model)

	M.I.	Par Change

Regression Weights: (Group number 1 - Default model)

			M.I.	Par Change
Q2dN_2	<---	Q2bN_3	6.940	.109
Q2dN_2	<---	Q2dN_1	18.876	.189
Q2dN_2	<---	Q2dN_3	13.437	.168
Q2fN_2	<---	Q2aN_2	5.016	-.100
Q2eN_3	<---	Q2eN_4	7.823	.115
Q2fN_3	<---	Q2fN_4	18.220	.187
Q2eN_1	<---	Q2dN_4	4.200	.084
Q2aN_4	<---	Q2aN_3	5.964	.102
Q2cN_3	<---	Q2cN_4	5.272	.096
Q2bN_4	<---	Q2bN_3	4.139	.094
Q2eN_4	<---	Q2eN_3	10.557	.162
Q2eN_4	<---	Q2fN_4	4.427	.094
Q2eN_4	<---	Q2bN_1	6.314	-.123
Q2dN_4	<---	Q2dN_3	13.416	.188
Q2cN_1	<---	Q2cN_2	4.249	.091
Q2cN_1	<---	Q2aN_3	5.269	.092
Q2fN_4	<---	Q2fN_3	16.731	.235
Q2fN_4	<---	Q2bN_2	4.183	-.116
Q2aN_2	<---	Q2fN_2	6.526	-.106
Q2aN_2	<---	Q2aN_1	5.827	.093
Q2aN_1	<---	Q2aN_2	6.063	.101
Q2bN_2	<---	Q2fN_4	5.406	-.087
Q2bN_2	<---	Q2bN_1	7.742	.115
Q2aN_3	<---	Q2aN_4	9.257	.123
Q2aN_3	<---	Q2cN_1	5.560	.101
Q2bN_1	<---	Q2eN_4	7.316	-.111
Q2bN_1	<---	Q2bN_2	6.596	.111
Q2bN_3	<---	Q2eN_1	4.040	-.098
Q2bN_3	<---	Q2bN_4	4.648	.095
Q2dN_1	<---	Q2fN_1	7.032	.125
Q2dN_1	<---	Q2dN_2	18.861	.201
Q2cN_4	<---	Q2cN_3	5.482	.093
Q2cN_4	<---	Q2dN_3	4.211	-.094
Q2dN_3	<---	Q2dN_2	9.244	.144
Q2dN_3	<---	Q2dN_4	15.436	.168

© Eseigboria Grace Paula Ijasan, 2018

OCAI now Modified

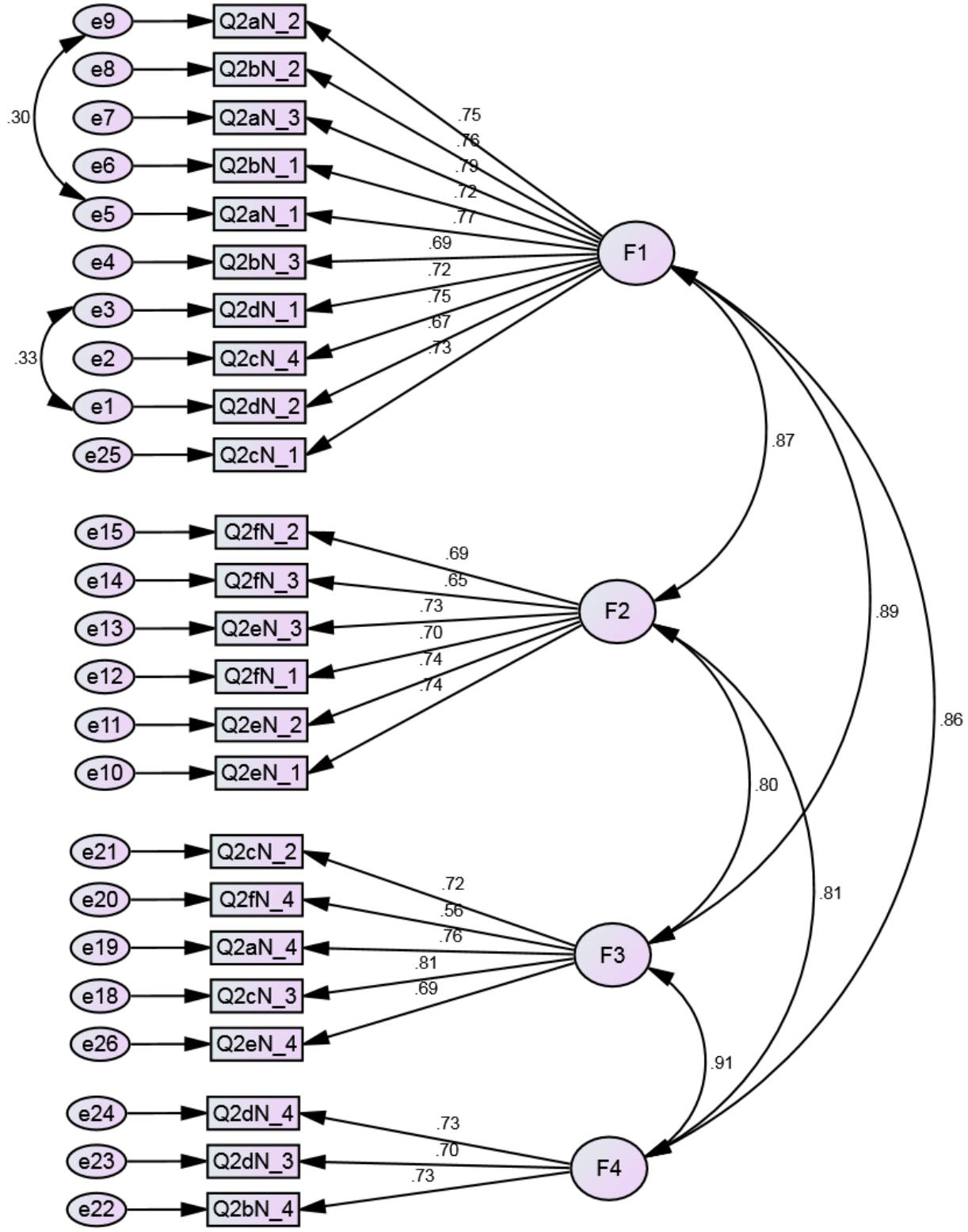

Date and Time

© Eseigboria Grace Paula Ijasan, 2018

Date: Tuesday, October 10, 2017
Time: 8:40:20 AM
Title
Variable counts (Group number 1)

Number of variables in your model:	52
Number of observed variables:	24
Number of unobserved variables:	28
Number of exogenous variables:	28
Number of endogenous variables:	24

Parameter Summary (Group number 1)

	Weights	Covariances	Variances	Means	Intercepts	Total
Fixed	28	0	0	0	0	28
Labeled	0	0	0	0	0	0
Unlabeled	20	8	28	0	0	56
Total	48	8	28	0	0	84

Models
Default model (Default model)
Notes for Model (Default model)
Computation of degrees of freedom (Default model)

Number of distinct sample moments:	300
Number of distinct parameters to be estimated:	56
Degrees of freedom (300 - 56):	244

Result (Default model)
Minimum was achieved
Chi-square = 540.424
Degrees of freedom = 244
Probability level = .000
Group number 1 (Group number 1 - Default model)
Estimates (Group number 1 - Default model)
Scalar Estimates (Group number 1 - Default model)
Maximum Likelihood Estimates
Regression Weights: (Group number 1 - Default model)

			Estimate	S.E.	C.R.	P	Label
Q2dN_2	<---	F1	1.000				
Q2cN_4	<---	F1	1.209	.109	11.055	***	
Q2dN_1	<---	F1	1.143	.088	13.036	***	
Q2bN_3	<---	F1	1.169	.113	10.385	***	
Q2aN_1	<---	F1	1.259	.111	11.361	***	
Q2bN_1	<---	F1	1.124	.105	10.732	***	
Q2aN_3	<---	F1	1.325	.114	11.633	***	
Q2bN_2	<---	F1	1.192	.106	11.221	***	
Q2aN_2	<---	F1	1.185	.106	11.133	***	
Q2eN_1	<---	F2	1.000				
Q2eN_2	<---	F2	.953	.080	11.969	***	
Q2fN_1	<---	F2	.893	.079	11.297	***	
Q2eN_3	<---	F2	.962	.082	11.738	***	
Q2fN_3	<---	F2	.862	.083	10.348	***	
Q2fN_2	<---	F2	.906	.082	11.093	***	
Q2cN_3	<---	F3	1.000				
Q2aN_4	<---	F3	.889	.065	13.660	***	
Q2fN_4	<---	F3	.678	.072	9.349	***	
Q2cN_2	<---	F3	.773	.061	12.646	***	
Q2bN_4	<---	F4	1.000				
Q2dN_3	<---	F4	.835	.078	10.693	***	
Q2dN_4	<---	F4	.963	.086	11.230	***	

© Eseigboria Grace Paula Ijasan, 2018

			Estimate	S.E.	C.R.	P	Label
Q2cN_1	<---	F1	1.131	.104	10.829	***	
Q2eN_4	<---	F3	.809	.067	12.090	***	

Standardized Regression Weights: (Group number 1 - Default model)

			Estimate
Q2dN_2	<---	F1	.667
Q2cN_4	<---	F1	.746
Q2dN_1	<---	F1	.717
Q2bN_3	<---	F1	.695
Q2aN_1	<---	F1	.771
Q2bN_1	<---	F1	.721
Q2aN_3	<---	F1	.792
Q2bN_2	<---	F1	.759
Q2aN_2	<---	F1	.753
Q2eN_1	<---	F2	.745
Q2eN_2	<---	F2	.742
Q2fN_1	<---	F2	.702
Q2eN_3	<---	F2	.728
Q2fN_3	<---	F2	.646
Q2fN_2	<---	F2	.690
Q2cN_3	<---	F3	.812
Q2aN_4	<---	F3	.760
Q2fN_4	<---	F3	.557
Q2cN_2	<---	F3	.716
Q2bN_4	<---	F4	.729
Q2dN_3	<---	F4	.695
Q2dN_4	<---	F4	.731
Q2cN_1	<---	F1	.729
Q2eN_4	<---	F3	.691

Covariances: (Group number 1 - Default model)

			Estimate	S.E.	C.R.	P	Label
F1	<-->	F2	.620	.082	7.588	***	
F1	<-->	F3	.775	.098	7.947	***	
F1	<-->	F4	.671	.090	7.440	***	
F2	<-->	F3	.807	.102	7.935	***	
F2	<-->	F4	.727	.097	7.507	***	
F3	<-->	F4	.994	.121	8.238	***	
e1	<-->	e3	.252	.053	4.736	***	
e5	<-->	e9	.197	.048	4.115	***	

Correlations: (Group number 1 - Default model)

			Estimate
F1	<-->	F2	.867
F1	<-->	F3	.890
F1	<-->	F4	.862
F2	<-->	F3	.800
F2	<-->	F4	.807
F3	<-->	F4	.907
e1	<-->	e3	.329
e5	<-->	e9	.296

Variances: (Group number 1 - Default model)

	Estimate	S.E.	C.R.	P	Label
F1	.618	.102	6.046	***	
F2	.829	.120	6.881	***	

© Eseigboria Grace Paula Ijasan, 2018

	Estimate	S.E.	C.R.	P	Label
F3	1.228	.157	7.821	***	
F4	.979	.150	6.524	***	
e1	.769	.070	10.948	***	
e2	.719	.068	10.619	***	
e3	.762	.071	10.754	***	
e4	.904	.083	10.872	***	
e5	.668	.064	10.399	***	
e6	.719	.067	10.754	***	
e7	.645	.063	10.285	***	
e8	.644	.061	10.537	***	
e9	.661	.063	10.515	***	
e10	.665	.067	9.917	***	
e11	.616	.062	9.951	***	
e12	.679	.066	10.291	***	
e13	.679	.067	10.080	***	
e14	.858	.081	10.638	***	
e15	.748	.072	10.377	***	
e18	.635	.070	9.137	***	
e19	.709	.072	9.886	***	
e20	1.251	.113	11.050	***	
e21	.697	.068	10.296	***	
e22	.865	.092	9.449	***	
e23	.729	.074	9.865	***	
e24	.793	.084	9.420	***	
e25	.697	.065	10.717	***	
e26	.880	.084	10.473	***	

Matrices (Group number 1 - Default model)

Modification Indices (Group number 1 - Default model)

Covariances: (Group number 1 - Default model)

			M.I.	Par Change
e26	<-->	F2	18.455	.155
e26	<-->	F1	17.577	-.105
e25	<-->	F3	10.237	.115
e25	<-->	F1	4.245	-.045
e24	<-->	F1	6.293	-.062
e23	<-->	F3	11.139	-.124
e23	<-->	F1	6.408	.059
e23	<-->	e24	4.668	.114
e22	<-->	F3	4.164	.084
e22	<-->	e23	5.493	-.129
e21	<-->	e25	22.693	.221
e20	<-->	F2	14.821	.162
e20	<-->	F1	17.347	-.122
e20	<-->	e26	5.446	.159
e19	<-->	F2	12.138	-.116
e19	<-->	F1	7.715	.064
e19	<-->	e23	5.991	-.122
e18	<-->	F1	7.222	.060
e15	<-->	F1	4.554	-.050
e14	<-->	e20	22.346	.317
e13	<-->	e26	12.036	.182
e12	<-->	e25	5.872	.111

© Eseigboria Grace Paula Ijasan, 2018

			M.I.	Par Change
e12	<-->	e21	11.299	.156
e12	<-->	e20	4.118	.123
e12	<-->	e15	13.102	.173
e12	<-->	e13	5.540	-.108
e10	<-->	e24	4.963	.114
e10	<-->	e20	6.010	-.149
e9	<-->	e25	5.243	-.096
e9	<-->	e15	6.915	-.115
e8	<-->	F4	8.333	.106
e8	<-->	F3	11.375	-.117
e8	<-->	e26	4.032	-.101
e8	<-->	e20	6.183	-.145
e8	<-->	e12	7.730	-.123
e8	<-->	e10	4.718	.097
e7	<-->	e20	4.038	-.119
e7	<-->	e19	17.520	.195
e7	<-->	e9	5.536	.096
e6	<-->	e26	11.499	-.178
e6	<-->	e8	19.147	.196
e5	<-->	F4	4.209	-.072
e5	<-->	e11	4.842	.090
e4	<-->	F4	7.962	.121
e4	<-->	F2	7.228	-.097
e4	<-->	e22	6.836	.157
e4	<-->	e10	5.043	-.117
e3	<-->	e22	4.716	-.112
e2	<-->	F3	4.852	.080
e2	<-->	e23	6.889	-.128
e2	<-->	e18	9.027	.142
e1	<-->	e23	13.289	.169
e1	<-->	e9	4.794	-.089

Variances: (Group number 1 - Default model)

	M.I.	Par Change

Regression Weights: (Group number 1 - Default model)

			M.I.	Par Change
Q2eN_4	<---	Q2eN_3	10.127	.158
Q2eN_4	<---	Q2bN_1	6.917	-.128
Q2cN_1	<---	Q2cN_2	14.530	.168
Q2dN_3	<---	Q2dN_1	6.665	.114
Q2dN_3	<---	Q2dN_2	14.405	.179
Q2cN_2	<---	Q2cN_1	9.169	.133
Q2cN_2	<---	Q2fN_1	4.122	.094
Q2fN_4	<---	Q2fN_3	16.621	.234
Q2fN_4	<---	Q2fN_1	4.115	.122
Q2fN_4	<---	Q2bN_2	4.258	-.117
Q2aN_4	<---	Q2aN_3	6.827	.109
Q2cN_3	<---	Q2cN_4	5.722	.101
Q2fN_2	<---	Q2fN_1	6.046	.118
Q2fN_2	<---	Q2aN_2	6.257	-.112
Q2fN_3	<---	Q2fN_4	15.752	.173
Q2eN_3	<---	Q2eN_4	6.766	.107
Q2fN_1	<---	Q2cN_2	7.052	.118

© Eseigboria Grace Paula Ijasan, 2018

			M.I.	Par Change
Q2fN_1	<---	Q2fN_2	6.289	.111
Q2fN_1	<---	Q2dN_2	4.106	.091
Q2eN_1	<---	Q2fN_4	4.366	-.083
Q2aN_2	<---	Q2fN_2	4.408	-.085
Q2bN_2	<---	Q2fN_4	5.585	-.090
Q2bN_2	<---	Q2bN_1	8.619	.123
Q2aN_3	<---	Q2aN_4	6.899	.105
Q2bN_1	<---	Q2eN_4	7.481	-.113
Q2bN_1	<---	Q2bN_2	7.469	.119
Q2bN_3	<---	Q2eN_1	4.117	-.099
Q2cN_4	<---	Q2cN_3	4.115	.080
Q2dN_2	<---	Q2dN_3	7.443	.117

CMIN

Model	NPAR	CMIN	DF	P	CMIN/DF
Default model	56	540.424	244	.000	2.215
Saturated model	300	.000	0		
Independence model	24	4086.832	276	.000	14.807

RMR, GFI

Model	RMR	GFI	AGFI	PGFI
Default model	.073	.859	.826	.698
Saturated model	.000	1.000		
Independence model	.716	.162	.089	.149

Baseline Comparisons

Model	NFI Delta1	RFI rho1	IFI Delta2	TLI rho2	CFI
Default model	.868	.850	.923	.912	.922
Saturated model	1.000		1.000		1.000
Independence model	.000	.000	.000	.000	.000

Parsimony-Adjusted Measures

Model	PRATIO	PNFI	PCFI
Default model	.884	.767	.815
Saturated model	.000	.000	.000
Independence model	1.000	.000	.000

NCP

Model	NCP	LO 90	HI 90
Default model	296.424	232.961	367.619
Saturated model	.000	.000	.000
Independence model	3810.832	3607.680	4021.284

FMIN

Model	FMIN	F0	LO 90	HI 90
Default model	2.009	1.102	.866	1.367
Saturated model	.000	.000	.000	.000
Independence model	15.193	14.167	13.411	14.949

RMSEA

Model	RMSEA	LO 90	HI 90	PCLOSE
Default model	.067	.060	.075	.000
Independence model	.227	.220	.233	.000

AIC

Model	AIC	BCC	BIC	CAIC
Default model	652.424	663.899	853.936	909.936
Saturated model	600.000	661.475	1679.527	1979.527
Independence model	4134.832	4139.750	4221.194	4245.194

© Eseigboria Grace Paula Ijasan, 2018

ECVI

Model	ECVI	LO 90	HI 90	MECVI
Default model	2.425	2.189	2.690	2.468
Saturated model	2.230	2.230	2.230	2.459
Independence model	15.371	14.616	16.153	15.389

HOELTER

Model	HOELTER .05	HOELTER .01
Default model	141	149
Independence model	21	22

Execution time summary

Minimization:	.062
Miscellaneous:	2.434
Bootstrap:	.000
Total:	2.496

© Eseigboria Grace Paula Ijasan, 2018

OCAI now (as in original work)

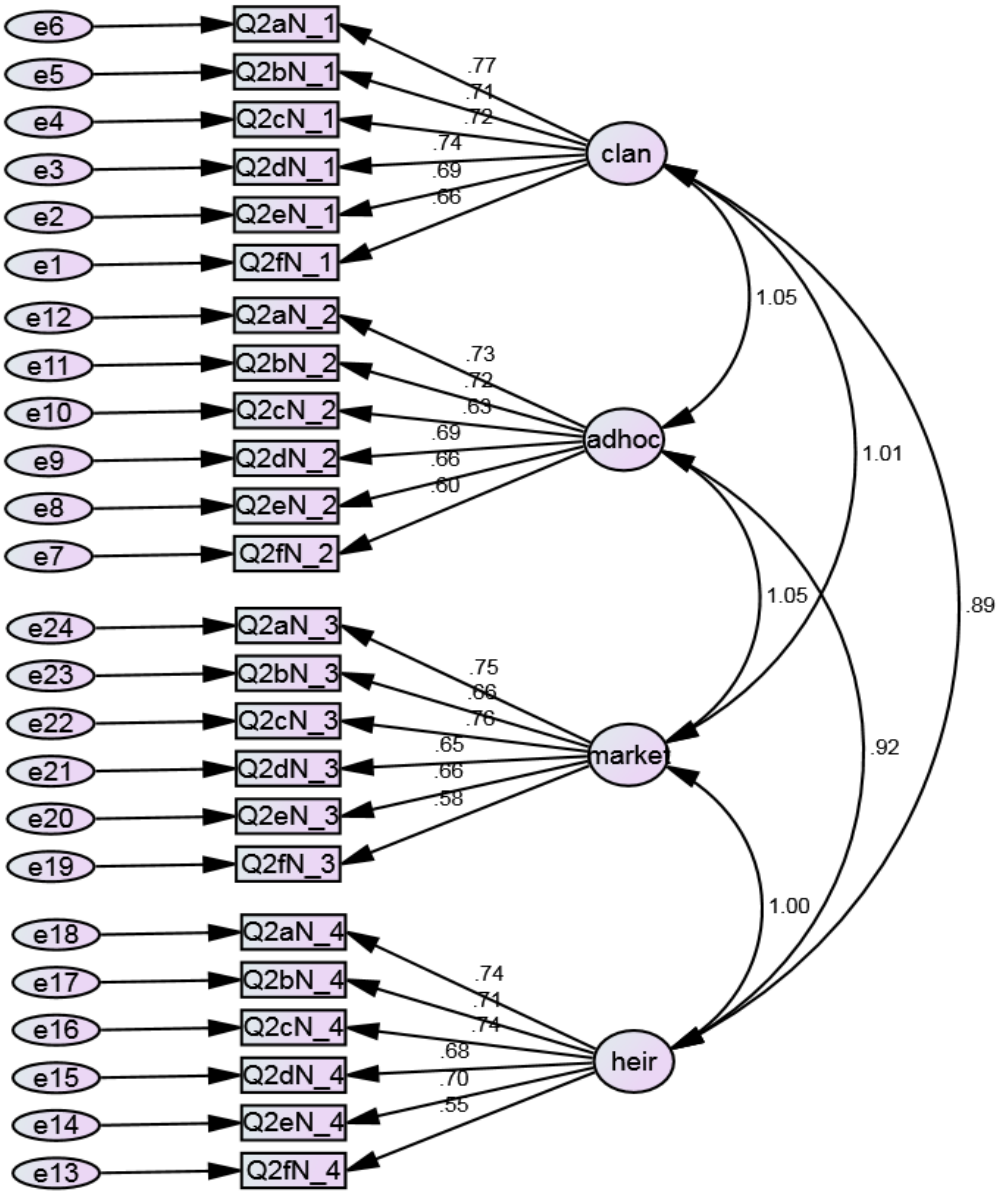

C:\Users\LOBUS\Desktop\ijasan ese\OCAI NOW(as in Original work).amw

Variable counts (Group number 1)

Number of variables in your model:	52
Number of observed variables:	24
Number of unobserved variables:	28
Number of exogenous variables:	28
Number of endogenous variables:	24

© Eseigboria Grace Paula Ijasan, 2018

Parameter Summary (Group number 1)

	Weights	Covariances	Variances	Means	Intercepts	Total
Fixed	28	0	0	0	0	28
Labeled	0	0	0	0	0	0
Unlabeled	20	6	28	0	0	54
Total	48	6	28	0	0	82

Models

Default model (Default model)

Notes for Model (Default model)

Computation of degrees of freedom (Default model)

Number of distinct sample moments:	300
Number of distinct parameters to be estimated:	54
Degrees of freedom (300 - 54):	246

Result (Default model)

Minimum was achieved
Chi-square = 675.216
Degrees of freedom = 246
Probability level = .000

Group number 1 (Group number 1 - Default model)

Estimates (Group number 1 - Default model)

Scalar Estimates (Group number 1 - Default model)

Maximum Likelihood Estimates

Regression Weights: (Group number 1 - Default model)

			Estimate	S.E.	C.R.	P	Label
Q2fN_1	<---	clan	1.000				
Q2eN_1	<---	clan	1.103	.106	10.369	***	
Q2dN_1	<---	clan	1.209	.110	10.991	***	
Q2cN_1	<---	clan	1.144	.107	10.730	***	
Q2bN_1	<---	clan	1.136	.107	10.626	***	
Q2aN_1	<---	clan	1.299	.114	11.449	***	
Q2fN_2	<---	adhoc	1.000				
Q2eN_2	<---	adhoc	1.084	.114	9.471	***	
Q2dN_2	<---	adhoc	1.132	.116	9.729	***	
Q2cN_2	<---	adhoc	1.054	.116	9.124	***	
Q2bN_2	<---	adhoc	1.240	.123	10.047	***	
Q2aN_2	<---	adhoc	1.268	.124	10.190	***	
Q2fN_4	<---	heir	1.000				
Q2eN_4	<---	heir	1.218	.143	8.513	***	
Q2dN_4	<---	heir	1.192	.142	8.375	***	
Q2cN_4	<---	heir	1.272	.144	8.829	***	
Q2bN_4	<---	heir	1.310	.151	8.652	***	
Q2aN_4	<---	heir	1.287	.146	8.798	***	
Q2fN_3	<---	market	1.000				
Q2eN_3	<---	market	1.119	.122	9.197	***	
Q2dN_3	<---	market	1.090	.120	9.104	***	
Q2cN_3	<---	market	1.457	.144	10.100	***	
Q2bN_3	<---	market	1.232	.134	9.205	***	
Q2aN_3	<---	market	1.391	.139	10.037	***	

© Eseigboria Grace Paula Ijasan, 2018