

https://dspace.org/

Microwave induced solid-state interactions for the synthesis of Fischer-Tropsch catalysts

Linganiso, Linda Zikhona

2010-04-13T09:05:24Z
http://hdl.handle.net/10539/7969

Downloaded from a DSpace repository. https://dspace.org/

CHAPTER FIVE

EXPERIMENTAL METHODS

The reagents as well as the equipment used in this work are reported. The procedures used to synthesize supported and unsupported iron catalysts are also explained. Several characterization techniques (transmission electron microscopy (TEM), scanning electron microscopy (SEM), thermogravimetric analysis (TGA), temperature programmed reduction (TPR), temperature programmed surface reaction (TPSR), powder X-ray diffraction (PXRD) and Mössbauer spectroscopy) have been used to characterize iron catalysts to further examine the microwave effect and are explained in detail. The experimental arrangement used for the FT reactions is shown in **figure 5.1**.

5.1 CATALYST PREPARATION

5.1.1 PREPARATION OF UNSUPPORTED IRON CATALYSTS

Unsupported iron catalysts were prepared by means of the precipitation method. 4 M solution of the $Fe(NO_3)_3 \bullet 9H_2O$ was used for precipitation. $Fe(NO_3)_3 \bullet 9H_2O$ solution was stirred vigorously at room temperature. An appropriate amount of 12 M aqueous NH_3-solution was added to precipitate the iron catalyst. The amount of the ammonium solution added was determined by the amount required to achieve a pH of 7.2. The precipitate was separated from the liquid using a centrifuge. The rotor speed used was 5000 RPM. This experiment was carried out for 30 min. The catalyst precursor was dried overnight at 110 °C in an oven. The catalyst precursor was calcined at 350 °C for 6.5 h in air to remove nitrates.

For promoted unsupported catalysts, iron catalysts were impregnated with 2% of K_2CO_3. Potassium was brought onto the calcined catalyst precursor using impregnation with an aqueous K_2CO_3 solution. The catalysts were calcined at 350 ^oC afterwards.

5.1.2 PREPARATION OF SUPPORTED IRON CATALYSTS

Fe/SiO_2 catalysts were prepared using the incipient wetness impregnation method. In this method, a concentrated $Fe(NO_3)_3 \cdot 9H_2O$ solution which gives a metal loading of 10 % was prepared. The concentrated metal solution was then added to the support (SiO_2) drop wise taking into consideration the pore volume of the support (SiO_2) (0.82 ml/g). The slurry was then dried at 110 ^oC in a static oven overnight. The catalyst precursor was calcined at 350 ^oC to remove the nitrates.

For promoted supported catalysts, iron catalysts were impregnated with 2% potassium (K). 2 % potassium (K) was a loading of choice; it was kept constant through out the project because the main aim of this work was to examine the microwave effect and not potassium effect. Potassium was brought onto the calcined catalyst precursor using impregnation with an aqueous K_2CO_3 solution. The amount of potassium used was based on the mass of the calcined catalyst. Impregnation was followed by calcination at 350 ^oC.

The intended iron loading was 10%. In all cases the iron content was determined by means of X-ray fluorescence (XRF).

5.1.3 PREPARATION OF SUPPORTED COBALT CATALYSTS

Cobalt catalyst was also prepared following the precipitation method of catalyst preparation. The same procedure for preparation of iron catalyst was used in the preparation of cobalt catalyst. The differences are listed below:

- Cobalt (II) nitrate was used as the metal salt.
- No potassium promotion was done.
- Reduction temperature is 400 ^{o}C.

5.1.4 MICROWAVE PRE-TREATMENT OF THE IRON CATALYSTS

All catalysts were microwave pre-treated in an AIM AM28ES (900 W 2.45 GHz) microwave. For all measurements, 1g of the sample was weighed and placed uniformly in a Pyrex Petri dish. The samples were heated at different (90, 180, 270, 360, 450, 540, or 900 W) power levels for 8, 15, 30 or 60 seconds.

5.2 REAGENTS

SiO_2 gel (Davisil, grade 645, 60-100 mesh, 150 Å, 99 + %) (Sigma-Aldrich) was chosen as the support, because of its high surface area, good mechanical properties and relative inertness. It has been used extensively as a support for Fischer-Tropsch catalysts within our research group and by many others. $Fe(NO_3)_3 \bullet 9H_2O$ (Merck) was used as the metal salt precursor. K_2CO_3 (Glassworld) was also used as the source of potassium promoter. Syngas (60% H_2, 30% CO in N_2 balance), hydrogen (99.9%), argon (99.9%), carbon dioxide (99.9%), carbon monoxide (5% in He balanced) cylinders were obtained from AFROX. The chemicals were used as received without any further analysis and purification.

5.3 CATALYST CHARACTERIZATION

5.3.1 INTRODUCTION

Catalyst characterization offers major information about the structure of iron FT catalysts and their precursors. It permits identification of active sites for FT reaction. A wide range of physical and chemical techniques has been used to analyze iron FT catalysts. Catalysts characterization also shows reduction behaviour of the iron catalysts as well as identifying phases present in these catalysts. These includes thermogravimetric analysis (TGA), temperature programmed reduction (TPR), powder X-Ray diffraction (PXRD), Möosbauer spectroscopy, temperature programmed surface reactions, transmission electron microscopy and scanning electron microscopy.

5.3.2 THERMOGRAVIMETRIC ANALYSIS (TGA)

Thermogravimetric analysis was carried out with a Perkin Elmer Pyris 1 TGA thermogravietric analyzer using nitrogen as a purge gas and a heating rate of 5 ^{o}C/min. Samples are weighed on a balance and then placed in a crucible before the analysis. The crucible is suspended on the balance of the TGA apparatus, followed by lifting up of the furnace to cover the balance. The TGA programme was conditioned to ramp the temperature linearly from room temperature to 1000 ^{o}C under a flow of nitrogen or air. The temperature of the sample was monitored and the loss of weight of the sample was expressed in terms of percentage weight loss.

5.3.3 POWDER X-RAY DIFFRACTION (PXRD)

The catalysts were characterized using powder X-ray diffraction (PXRD) for phase identification and for crystallite size estimation. Approximately 0.5 g of Fe/SiO_2 composite materials was used for the analysis by powder X-ray diffraction (PXRD). Results were obtained from the advanced D8 Bruker X-ray diffractometer and the conditions of analysis were as follows: voltage - 40 kV; divergence slit - 0.6 mm; receiver slit - 3°; scan from - 5°2θ; scan to - 90°2θ; step size - 0.02°2θ; time taken by each scan - 10 min., type of scan-mediumres, radiation ($CuK\alpha_1$, $CuK\alpha_2$), combined average -1.5418 Å.

5.3.4 TEMPERATURE PROGRAMMED REDUCTION (TPR)

Temperature-programmed reduction was also used to study the effect of microwave irradiation on the degree of reduction of iron catalysts. The reducing gas was 5% hydrogen in argon balance and the ramping rate was 10 ^oC/min. The flow rate of hydrogen in argon was 30 ml/min. Fe/SiO_2 FT catalysts were first degassed in argon at 150 ^oC for 45 min., then the reactor temperature was allowed to cool down to room temperature. This was followed by catalyst reduction. The reactor temperature was ramped from room temperature to 900 ^oC. The outputs were collected from the computer system.

TPR studies for the unsupported iron-oxide containing catalysts were also carried out using the above mentioned procedure.

5.3.5 BRUNAUER-EMMETT-TELLER (BET) METHOD

Nitrogen adsorption-desorption isotherms were measured on a Micromeritics TRISTAR 3000 analyzer. The samples were degassed under vacuum overnight before the nitrogen

adsorption measurements. The specific surface areas were determined by the Brunauer-Emmett-Teller (BET) method.

5.3.6 TRANSMISSION ELECTRON MICROSCOPY (TEM)

The JEOL-100S transmission electron microscope operating at 80 kV was used to establish the dispersion and the particle size of the metal on the catalysts' surfaces. The catalysts were ground and slurred in methanol. A droplet of the slurry was placed on a carbon-film-coated copper grid. After leaving the grid to dry, it was mounted onto the microscope. TEM studies were carried out using the unsupported iron-based catalysts precursor.

5.3.7 X-RAY FLORESCENCE (XRF) SPECTROSCOPY

The XRF measurements were carried out on a PW 12404 Panalytical model instrument. Powder samples were mixed with 2% Mowiol binder before being pressed. The X-ray source used was a Rh tube.

5.3.8 SCANNING ELECTRON MICROSCOPY (SEM)

A scanning electron microscopy (Joel JSM 840) was used to study the morphology and particle size of the iron catalysts. With SEM, the electron beam strikes the surface at an angle, causing the emission of secondary electrons from the surface atoms. The electrons strike a detector which is positioned at an angle to the surface. The signal is enhanced by a photomultiplier and this is followed by the generation of an image. Scanning electron microscopy gives information about the surface structure of the sample. Scanning electron microscopy studies were done using the unsupported iron catalyst.

5.3.9 TRANSMISSION MöSSBAUER SPECTROSCOPY (TMS)

Mössbauer spectroscopy is another method of characterizing solids and FT catalysts. It helps in identification of iron catalyst FT active phases. The Mössbauer spectra of the catalysts were recorded at room temperature and at 4K.

5.3.10 CENTRIFUGE

Centrifuge ("Beckman" model J2-21 Centrifuge) is also employed during FT catalyst preparation to separate the liquid phase from the solid. In a typical centrifuge experiment, the operation rotor temperature is set at -10 ^{o}C. The weight of the bottles are arranged to be equal on both sides of the machine. The rotor speed used was 5000 RPM. All experiments were carried out for 30 min.

5.3.11 TEMPERATURE PROGRAMMED SURFACE REACTION (TPSR)

The interaction of the reactant gas (CO) with the surface of iron catalysts was studied by temperature programmed surface reaction (TPSR). TPSR is used in identification of active sites in the catalyst surface. Catalytic activity is connected to the number of active sites on the surface. In heterogeneous catalysis, reactions occur on these active sites and thus, catalytic activity depends on the number of active sites present on the catalyst's surface. Peak intensity is related to the amount of the desorbing component.

For each TPSR experiment, the iron catalyst was first reduced in hydrogen for 16 h at 350 ^{o}C at 45 ml/min./0.07g catalyst. The reactor was allowed to cool down to room temperature in flowing hydrogen. At room temperature, the hydrogen was switched carbon monoxide. Carbon monoxide was adsorbed at room temperature for 30 min. at 30

ml/min per 0.07 g catalyst. Hydrogen was then allowed to flow again through the reactor while desorption process was carried out. The analysis was performed using FID. The outputs were collected from a computer system. Desorption occurred from room temperature to 800 ^{o}C. TPSR was used in this work to investigate the microwave effect on the surface of the FT iron catalyst.

5.3.12 TOF-SECONDARY ION MASS SPECTROMETRY (SIMS)

In TOF-SIMS analysis, a solid surface is bombarded by primary ions of up to 25 keV energy. The primary ion energy is transferred to target atoms via atomic collisions and a so-called collision cascade is generated. The interaction of the collision cascade with surface molecules is soft enough to allow even large and non-volatile molecules with masses up to 10,000 AMU to escape without or with little fragmentation. A subsequent mass analysis of the emitted ions provides detailed information on the elemental and molecular composition of the surface. TOF mass spectrometry is based on the fact that ions with the same energy but different masses travel with different velocities. Basically, ions formed by a short ionisation event are accelerated by an electrostatic field to a common energy and travel over a drift path to the detector. The lighter ones arrive before the heavier ones and a mass spectrum is recorded. Measuring the flight time for each ion allows the determination of its mass. SIMS is a very surface sensitive technique because the emitted particles originate from the uppermost one or two monolayers.

5.4 FISCHER-TROPSCH REACTIONS

5.4.1 EXPERIMENTAL SET-UP

The schematic representation used for Fischer-Tropsch synthesis is shown in **figure 5.1**. FTS was carried out over physical mixtures composed of supported iron catalyst. A fixed-bed reactor was used, thermocouple was positioned in such a way that it enters the reactor and touches the catalyst for temperature measurements. Gas chromatographs were equipped with both a thermal conductivity detector (TCD) and a Flame Ionization Detector (FID). Gases are supplied from cylinders (AFROX, syngas (CO, H_2, N_2) and

Ar) and fed via pressure control. During operation, the catalyst was reduced and hydrogen is fed via pressure indicator control (PIC) and to the reactor. There was no temperature controller attached to the system to control the heating rate. After reduction, the temperature was taken down to reaction temperature (250 ^{o}C). Argon was used as the carrier gas. The setup consists of two six-way valve, one connected directly to the reactor, this valve is always closed during the reaction and is opened when injections are being done, when this valve is closed the products are kept in the loop, whereas when the valve is opened during injection whatever was kept in the loop goes to the flame ionization detector (FID) for analysis (or TCD for the other valve). Both valves were located in a gas chromatograph (GC). The rig was also equipped with two traps (wax trap and oil trap) both connected in series to the FID and TCD. The oil trap was kept at room temperature whereas the wax trap was kept at 150°C. The reactor outlet gas flow was controlled by a needle valve. A bubble meter was used to measure gas flow rates. Every gas was ventilated via a bubble meter.

The line between the reactor outlet and the chromatographs' injection valves was electric heated and kept at around 150 ^{o}C during tests.

To avoid problems which could have resulted in liquid being trapped in the six-way valve, the partial pressure of the product were relatively low. The rig was only designed to examine the microwave effect rather than to give complete analysis of hydrocarbon spectrum.

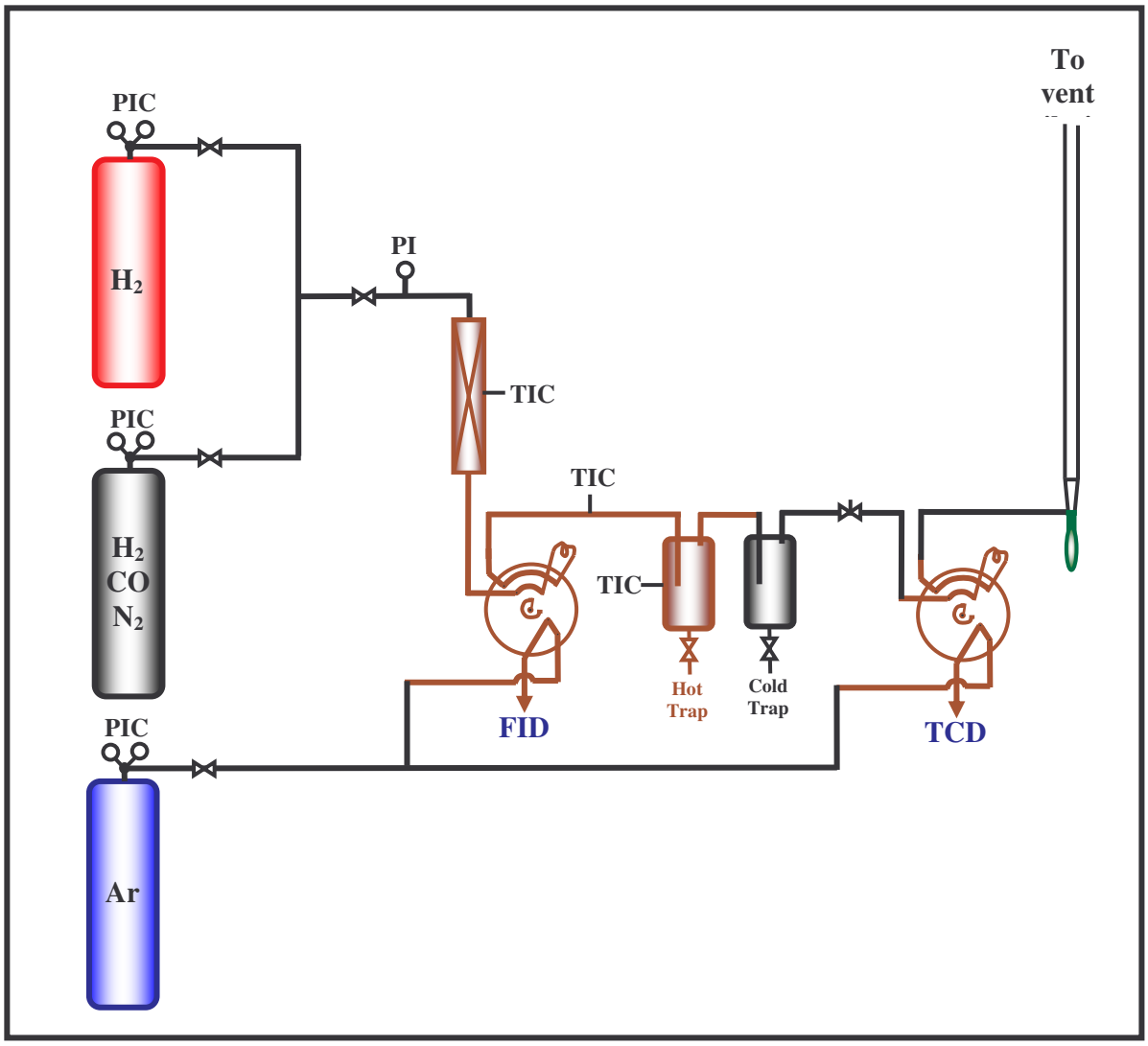

Figure 5.1: Schematic representation of the rig used for the Fischer-Tropsch Synthesis (FTS), PCI: pressure indicator control, TIC: temperature indicator control, PI: pressure indictor, FID: flame ionization detector, TCD: thermal conductivity detector, to vent (ventilation).

5.4.2 CHOICE OF REACTOR AND CATALYST PACKING

There are many reactors currently employed in the Fischer-Tropsch synthesis. FT reactors can be divided into two categories (Bromfield et al., 2001, Jager et al., 2001), those suitable for high temperature Fischer-Tropsch (HTFT) and those suitable for low temperature Fischer-Tropsch (LTFT) process. HTFT (uses an iron catalyst) is mainly for the production of alkenes and petrol, whereas LTFT (uses either a cobalt or an iron catalyst) is for the production of wax. In the high-temperature Fischer-Tropsch process, the reaction takes place in a fluidised bed reactor and iron is used as a catalyst whereas in the low-temperature Fischer-Tropsch process, either iron or cobalt catalyst is used in either a fluidized or a slurry reactor (Steynberg et al., 1999).

The choice of reactor represents a major challenge of FT catalyst screening. A FT reactor should use quite small amount of the catalyst and should consume low syngas. A reactor for screening FT catalyst must contain the following properties: small amount of the active phase (catalyst), relatively small syngas consumption and results obtained in the laboratory scale must be obtained in other reactors as well.

A fixed bed reactor is mostly used FT reactor because it represents the simplest and cheapest technical solution to perform catalytic evaluation. Other reactors are also used in FTS for specific objectives like continuous stirred tank reactor (CSTR). However, the slurry reactor has few advantages over fixed bed reactor, the advantages are as follows: better control of temperature, possibility to extract the catalyst from the reactor without disturbing the reaction and better control of reaction hydrodynamics.

The slurry reactor is quite expensive though, requires large amounts of catalyst and the catalysts in slurry reactor can undergo attrition (Khodakov et al., 2007). This brings us to a point where a fixed bed reactor is the most widely used FT reactor in industries and in academic research.

As the reactions involved in the process are highly exothermic, the fixed bed reactor provides a limited heat removal capability and a low conversion of the synthesis gas. In this work a fixed-bed reactor was used, and it is schematically represented in **figure 5.2**. The reactor was basically a 16 mm (inner diameter) stainless steel tube in which the catalyst bed was supported on quarts wool.

Before Fischer-Tropsch reactions, a thermocouple was inserted to the catalyst bed for the purpose of monitoring and controlling temperature. After every reaction the catalyst was passivated with carbon dioxide at room temperature for 4 h. This was done in order to avoid further catalyst oxidation for the purpose of ex-situ analysis.

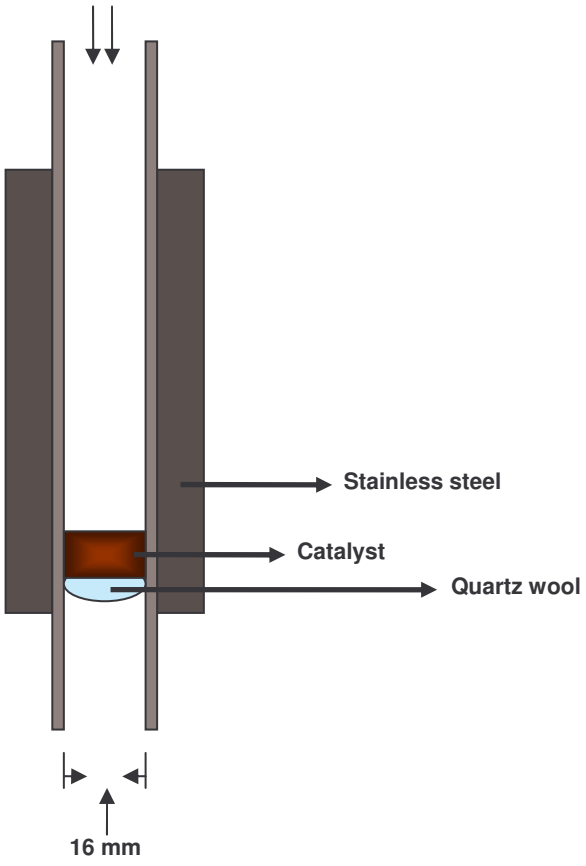

Figure 5.2: Schematic representation of the reactor used in the FTS.

5.4.3 EXPERIMENTAL PROCEDURE

Activity measurements of iron catalysts were tested using Fischer-Tropsch (FT) reaction. Fischer-Tropsch was carried out at 250 ^{o}C, 20 bar and a H_2:CO feed ratio of 2:1 in a down flow fixed bed reactor. 1.0 g of the catalyst was located in a fixed bed reactor made up of stainless steel with a diameter of 16 mm. The catalyst was supported by quartz wool which does not interfere with the analysis. The thermocouple was placed at the middle of the catalyst bed to ensure a precise temperature control during reduction and the reaction. The flow of each reactant gas was measured by a bubble meter. Fe/SiO_2 catalyst, after calcination, was reduced in flowing hydrogen (99.9% H_2, 45ml/min. and hold for 16h) at 350 ^{o}C under the atmospheric pressure. After reduction, the catalyst was allowed to cool down to reaction temperature (250 ^{o}C) in flowing hydrogen. Then the feed mixture containing synthesis gas (H_2:CO = 2:1) was introduced and the pressure was increased to 20 bar. The synthesis gas was flowing at 60 ml/min. The GC was equipped with thermal conductivity detector (TCD) for N_2, CO, CH_4, H_2 and CO_2 analysis and flame ionization detector (FID) for the analysis of hydrocarbons (C1 to C30). All the products (gas, liquid and solid) were analysed online. Space velocity was fixed at 60ml/min./g catalyst. The outputs were colleted from a computerized integrator. The schematic representation used in this work is shown in **figure 5.1.**

The same experimental procedure was used for the cobalt catalyst. The differences are listed below:

- Reaction temperature: 220 ^{o}C
- Reduction temperature is 400 ^{o}C.
- No promoter (potassium) was introduced to the catalyst.

5.5 PRODUCT ANALYSIS

5.5.1 QUANTIFICATION OF THE PRODUCTS

The activities of the catalysts were evaluated based on the carbon monoxide conversion (%). The analysis of both reactants and products in the two gas chromatographs was recorded and printed out as area counts with the assistance of a computerized integrator. The area counts of each individual component were converted to molar quantities by means of suitable calculations.

The choice of internal standard used for the online analysis was nitrogen. H_2, N_2, CO, CH_4 and CO_2 were analyzed using a GC equipped with thermal conductivity detector. All products were analyzed online. The hydrocarbons (paraffins, olefins, oxygenated compounds and alcohols) were also analyzed online using a temperature programmed gas chromatography (GC) equipped with a flame ionization detector (FID).

Thermal conductivity detector (TCD) was calibrated monthly using the calibration gas mixtures with known compositions. The calibration factors (f_{TCD}) for each species (x), normalized for nitrogen were calculated from areas under the peak (A_x) as indicated in equation 5.1.

$$(n_x/n_{N2}) = f_{TCD,\,x}\,(A_x/A_{N2}) \qquad 5.1$$

Flame ionization detector (FID) was first calibrated with the calibration gas containing CH_4, C_2H_6, C_2H_4, C_3H_8 and C_3H_6 respectively in order to identify the products (hydrocarbon peaks).

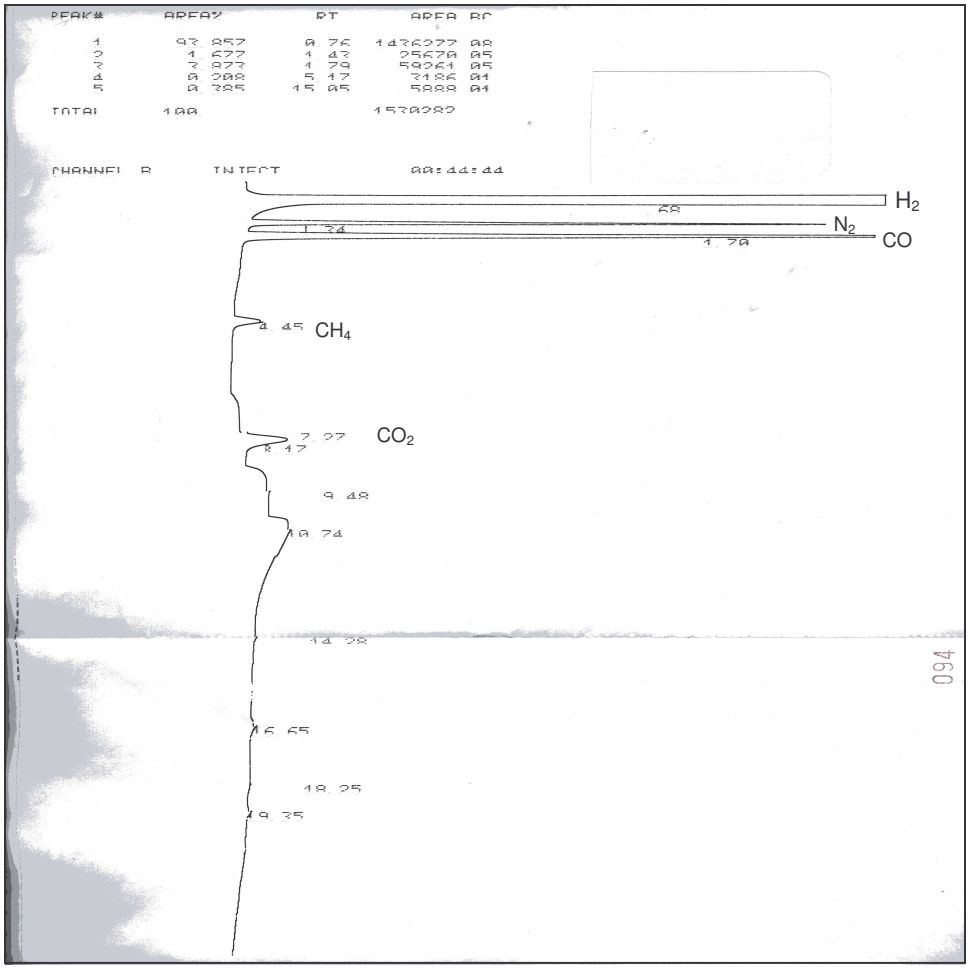

Figure 5.3: A typical chromatogram obtained from a TCD analysis. H_2, CO, CH_4 and CO_2 investigated respectively.

The FID in this work is used with a packed column with a diameter of 3 mm.

5.5.2 DATA ANALYSIS

Before FT reactions, carbon monoxide and hydrogen were allowed to bypass the reactor. The peak areas obtained from bypass were used to calculate the number of moles of each

component going into the reactor. During FT reaction, injections were done for both TCD (for H_2, CO, CH_4 and CO_2 analysis) and FID (for hydrocarbons analysis) online.

All experiments with or without the microwave pre-treatment were carried out using the above procedures. The next chapter entails all findings obtained in this work. The FT experimental results obtained are discussed in detail.

5.5.3 ANALYSIS CONDITIONS (GC)

TCD: Carboxen 1000, head pressure: 1 bar
The column used for FID: Sp 2100, head pressure: 3 bar

Table 5.1: A list of columns used in FTS and analysis conditions:

Detector	Type of column	Head pressure	Temperature Programme
TCD	Carboxen 1000	1 bar	150 ^{o}C
FID	Sp 2100	3 bar	-55 to 250 ^{o}C

5.6 HYDROGENATION OF ETHYLENE

The hydrogenation of ethylene on selected catalysts was carried out using a conventional microrector. Fe/SiO_2 catalysts were reduced at 350 ^{o}C in hydrogen at FT conditions. The reactor temperature was allowed to cool down to 250 ^{o}C in flowing hydrogen. Hydrogen and ethylene were mixed and fed to the reactor. The ratio of ethylene to hydrogen was 1:3. The flow of gases was monitored to be 100 ml/min. The oven temperature was kept at 60 ^{o}C, inlet temperature at 250 ^{o}C and the detector was kept at 250 ^{o}C respectively. The exit stream was analysed using a GC. The catalyst mass used was 1g.