

https://dspace.org/

The impact of Big Data Analytics Capabilities on the performance of South African Financial Sectors

Molepo, Sinah

2024

University of the Witwatersrand, Johannesburg

https://hdl.handle.net/10539/47885

Molepo, Sinah . (2024). The impact of Big Data Analytics Capabilities on the performance of South African Financial Sectors [Master`s dissertation, University of the Witwatersrand, Johannesburg]. WIReDSpace. https://hdl.handle.net/10539/47885

Downloaded from a DSpace repository. https://dspace.org/

The impact of Big Data Analytics Capabilities on the performance of South African Financial Sectors

Sinah Molepo

Supervisor: Dr Thubelihle Ndlela

A research report submitted to the Faculty of Commerce, Law and Management, University of the Witwatersrand, in partial fulfilment of the requirements for the degree of Master of Management in the field of Digital Business

Johannesburg, 2024

DECLARATION

I, Sinah Molepo, declare that this research report is my own work except as indicated in the references and acknowledgements. It is submitted in partial fulfilment of the requirements for the degree of Master of Management in the field of Digital Business at the University of the Witwatersrand, Johannesburg. It has not been submitted before for any degree or examination in this or any other university.

Name: Sinah Molepo Signature: 

Signed at: Pretoria

On this 28th day of February 2025.

DEDICATION

This research is dedicated to my late grandmother, Maria Mokgaetji Molepo. I know you have found eternal healing, and you are now our guardian angel. I dedicate the success of this research to you as you have moulded me to be the woman that I am today. It is through your teachings, love and trust in that I manage to concur many things in life. The impact you had in my life goes a long way. We shall cherish the memories we shared and continue to make you proud. Continue to rest in peace Gadima' a Pheladi!

ACKNOWLEDGEMENTS

My heartfelt gratitude to everyone who gave me support that I needed throughout this successful journey. I would like to direct my special acknowledgement to the following:

Heavenly God, it is not through my intelligence that I managed to walk this journey until the end; however, I believe you have been there from the beginning. Thank you God for keeping me sane and listening to my prayers.

My husband, Phuti Thopola. My love, you have been there for me from day one. I thank you for the support, encouragement and motivation. For the alarms that you would set to wake me up and the nights where you were up just to give me support. To stepping up and taking some of my responsibilities without complaining. I know I had taken so much time from us, but it was all worth it. Thank you for keeping our family intact while I was too busy for everything and most importantly, for not giving up on us. You are an amazing husband; I could not do this without you and I thank God for you. I love you very much Moshitoa!

Our daughter, Remoratile. Thank you for your understanding when mommy was too busy, it was a lot for a child your age, but you took it very well my Princess. I know you do not understand the impact of the hugs that you gave me from your tiny hands, but they kept me going. When you saw how tired I was, and you would prepare a cup of coffee to make me feel better. Love you nana!

My sisters. Thank you for being there for me and most importantly, for my little family. You have shown me how strong our bond is, and I thank our mothers for the unity they have created amongst us. You never complained when I asked for favours and sending you around, I knew that you were a phone call away. Your support meant a lot and I really appreciate it.

My supervisor, Dr. Thubelihle Ndlela. Thank you for your guidance and support in this academic journey. For your feedback, patience, knowledge and most importantly, kindness. God knew that I needed a supervisor like you and placed

you well. Thank you for the dedication in the role you played, and I deeply appreciate every minute of your time!

ABSTRACT

The relationship between big data analytics capabilities and firm performance has garnered a lot of attention from both practitioners and academics recently. Organisations have been investing in technologies like big data analytics to enhance performance, however, not all organisations have proven benefits of its impact to the firm's performance.

The study proposed the big data analytics capabilities conceptual framework, drawing upon the two theories resource-based view and dynamic capability to determine the impact of big data analytics capabilities on the firm performance of the financial sectors in South African, with a mediator of dynamic capabilities.

The findings of this study confirm the positive and significant relationship between big data analytics capabilities and the firm performance in South African financial sectors. Moreover, it was found that amongst the three big data analytics capabilities, tangible, intangible and human resources, the human capabilities had the greatest impact to firm performance, followed by tangible capabilities. On the other hand, the intangible capabilities had no significant impact of the firm performance. Furthermore, the study revealed that there is no significant effect of dynamic capabilities mediation on the relationship between big data analytics capabilities and the firm performance.

KEYWORDS: *Big Data, Big Data Analytics, Big Data Analytics Capabilities, firm Performance, Financial Sector, South Africa, operational performance, market performance.*

TABLE OF CONTENTS

DECLARATION ..... **ii**

DEDICATION ..... **iii**

ACKNOWLEDGEMENTS ..... **iv**

ABSTRACT ..... **vi**

TABLE OF CONTENTS ..... **vii**

LIST OF TABLES ..... **xi**

LIST OF FIGURES ..... **xiii**

LIST OF ACRONYMS ..... **xiv**

CHAPTER 1. INTRODUCTION **1**

1.1 STATEMENT OF PURPOSE 1
1.2 BACKGROUND OF THE STUDY 1
1.3 RESEARCH PROBLEM 3
1.4 RESEARCH OBJECTIVES 5
1.5 RATIONALE 6
1.6 DELIMITATIONS OF THE STUDY 6
1.7 DEFINITION OF TERMS 7
1.8 ASSUMPTIONS 7
1.9 CHAPTER OUTLINE 8
1.10 CHAPTER SUMMARY 9

CHAPTER 2. LITERATURE REVIEW AND THEORETICAL FRAMEWORK 10

2.1 INTRODUCTION 10
2.2 BIG DATA 10
2.3 BIG DATA ANALYTICS 12
2.3.1 TYPES OF DATA ANALYTICS 12
2.3.2 BIG DATA ANALYTICS IN FINANCIAL SECTOR 13

2.4 BIG DATA ANALYSIS CAPABILITIES 14
2.4.1 TANGIBLE CAPABILITIES 15
2.4.2 INTANGIBLE CAPABILITIES 17
2.4.3 HUMAN RESOURCE CAPABILITIES. 19
2.5 FIRM PERFORMANCE 21
2.6 THE IMPACT OF BIG DATA ANALYSIS CAPABILITIES ON FIRM PERFORMANCE 22
2.7 THE MEDIATING ROLE OF DYNAMIC CAPABILITIES 23
2.8 ANALYTICAL FRAMEWORK 25
2.8.1 RESOURCE BASED VIEW OF THE FIRM. 25
2.8.2 DYNAMIC CAPABILITIES THEORY 28
2.8.3 CONCEPTUAL FRAMEWORK 29
2.9 CONCLUSION OF LITERATURE REVIEW 33

CHAPTER 3. RESEARCH METHODOLOGY 34

3.1 INTRODUCTION 34
3.2 RESEARCH PARADIGM 34
3.3 RESEARCH APPROACH 34
3.4 RESEARCH DESIGN 35
3.5 DATA COLLECTION METHODS 35
3.6 POPULATION AND SAMPLE 36
3.6.1 POPULATION 36
3.6.2 SAMPLE AND SAMPLING METHOD 36
3.7 THE RESEARCH INSTRUMENT 37
3.8 PROCEDURE FOR DATA COLLECTION 38
3.9 DATA ANALYSIS STRATEGIES AND INTERPRETATION 39
3.10 POSSIBLE STUDY LIMITATIONS AND CHALLENGES 39
3.11 QUALITY ASSURANCE 40
3.11.1 EXTERNAL VALIDITY 40
3.11.2 INTERNAL VALIDITY 40
3.11.3 RELIABILITY 41
3.12 ETHICAL CONSIDERATIONS 41
3.13 CONCLUSION 42

CHAPTER 4. PRESENTATION OF RESULTS 43

4.1 INTRODUCTION 43
4.2 DATA PROCESSING 43
4.3 RESPONSE RATE 44
4.4 BIOGRAPHICAL INFORMATION 45
4.5 DESCRIPTION ANALYSIS 48

4.5.1 Study Constructs 48
4.5.2 Reliability study 56
4.6 Measurement Model Analysis 58
4.7 Structural Equation Model (SEM) 63
4.7.1 Hypothesis testing 64
4.8 Conclusion 71

CHAPTER 5. DISCUSSION OF THE RESULTS 72

5.1 Introduction 72
5.2 H1: Big Data Analytics Capabilities positively impacts the firm performance 72
5.3 H2. Big Data Analytics Capabilities positively impact the Dynamic Capabilities 75
5.4 H3: Big Data Analytics Capabilities positively impact the firm performance, using dynamic capabilities as a mediator. 76
5.5 Conclusion 77

CHAPTER 6. CONCLUSIONS & RECOMMENDATIONS 78

6.1 Introduction 78
6.2 Conclusions regarding big data analytics capabilities' positive impact on the firm performance 78
6.3 Conclusions regarding big data analytics capabilities' positive impact on the Dynamic Capabilities 79
6.4 Conclusions regarding big data analytics capabilities' positive impact on the firm performance, using dynamic capabilities as a mediator 79
6.5 Theoretical Contributions 80
6.6 Practical Contribution 80
6.7 Recommendations 81
6.8 Suggestions for further research 82

REFERENCES 83

APPENDIX A – Purpose of the Study 104

Appendix B – Participants Consent Form 105

Appendix C – Questionnaire 106

Appendix D – Ethics Clearance Certificate 108

LIST OF TABLES

Table 1: Research Outline 8

Table 2: Types of Data Analytics..... 13

Table 3: Summary of variable, constructs and hypothesis 32

Table 4 : Constructs coding 44

Table 5: Response rate 45

Table 6: Biographic Information 46

Table 7: Descriptive data for Technology 49

Table 8: Descriptive data for Infrastructure 50

Table 9: Descriptive data for Data 51

Table 10: Descriptive Data for Data Driven Culture 52

Table 11: Descriptive data for Learning Organisation 52

Table 12: Descriptive data for Management 53

Table 13: Descriptive data for Personnel 54

Table 14: Descriptive data for Dynamic Capabilities 55

Table 15: Descriptive data for Market Performance 56

Table 16: Descriptive data for Operational Performance 56

Table 17: Cronbach Alpha 57

Table 18: Model fit indices 61

Table 19: Factor Loading 62

Table 20: Higher order constructs 63

Table 21: H1 results 66

Table 22: H1 Sub-hypothesis results 67

Table 23: H2 Results 69

Table 24: H3 results 70

Table 25: Summary of Hypothesis Test Results 71

LIST OF FIGURES

Figure 1: 3 Vs of big data (Al-Barhamtoshy & Eassa, 2014) 11

Figure 2: Conceptual framework. 31

Figure 3: Initial Measurement Model 58

Figure 4: Improved Measurement Model 60

Figure 5: H1 SEM Model 65

Figure 6: H1.1, H1.2 and H1.3 SEM Model 66

Figure 7: H2 SEM Model 68

Figure 8: H3 SEM Model 70

LIST OF ACRONYMS

AMOS - Analysis of Moment Structures

BD - Big Data

BDA - Big Data Analytics

BDAC - Big Data Analytics Capabilities

CB-SEM - Covariance Based Structural Equation Model

CFA - Confirmatory Factor Analysis

DC - Dynamic Capabilities

RBV - Resource Based View

SEM - Structural Equation Modelling

SSPS - Statistical Package for Social Science

CHAPTER 1. INTRODUCTION

1.1 Statement of purpose

The purpose of this quantitative study was to determine the impact of Big Data Analytics Capabilities on the performance of the Financial Sectors in South African, with a mediator of dynamic capabilities. The study aimed at providing evidence of the relationship between the big data analytics capabilities and the firm performance in the financial sector, it attempts to fill in the existing gap in knowledge of the relationship and provide deep understanding of the value of big data analytics capabilities on firm performance.

1.2 Background of the study

Large amount of data started to existed around 1960s and the first data centre was built to store the data that year (Tiao, 2024). The large amount of data the companies were receiving gave birth to big data, which means high volume of data, that is received at a high rate, in different structures and are unable to be processed using the traditional data processes (Sneha & Keerthana, 2021). Big Data was initially characterised by its 3Vs, namely, Volume, Variety and Velocity (Salleh & Janczewski, 2016). Since 2005, Big data has been widely used (Jawad & Al-Bakry, 2022).

The emergent of Artificial Intelligence (AI), Internet of Things (IoT) and Machine Learning (ML) contributed to the continued production of big data (Sharif, 2023). As big data was generated through multiple sources, the need to intensively analyse, transform and extract value from the data aroused. Big data analytics was introduced to assist organisations in deriving valuable insights and new patterns to make better decisions and address the problems the organisations experience(Pillay & Van Der Merwe, 2021).

In Africa, there are 2400 organisations that specialises in AI, and South Africa is expected to reach annual growth rate of 20.64% by 2030 (GO-Globe, 2023a). The biggest technology companies in the world are the ones that use big data to develop new products, understands the market trends, etc. which in turn increases the revenue and firm performance (Buldoo, 2018). Those organisations are at a competitive advantage against their rivals (Eni et al., 2023).

Looking into government AI and Big Data readiness globally, South Africa is ranked at number 77 out of 193 countries, with Total score of 47,28%. The score comprises of the three pillars; which are Government Pillar with 37,82%, Technology Sector Pillar with 40,22% and Data & Infrastructure Pillar with 63,79% (Hankins et al., 2023).

For an organisation to succeed in analysing the data, it requires some resources or capabilities. Gupta and George (2016) summarised the big data analytics capabilities into tangible, intangible and human resources capabilities Furthermore, research by Arunachalam et al. (2018) highlighted that there are five big data analytics capabilities that an organisation needs to have, namely: data generation capability, advanced analytics capability, data visualisation capability, data integration and management capability, and data-driven culture. While Maréchal (2020) developed big data analytics capabilities framework consisting of governance capabilities, technology capabilities, talent capabilities and culture capabilities. Investing in big data analytics capabilities assists an organisation to respond well to uncertainties (Shdifat, 2022).

One of the industries impacted by big data in South Africa is the financial sector. According to GO-Globe (2023b), South Africa account for 40% of Fintech revenue in Africa, with 89% of South Africans exclusively using digital banking. By leveraging the power of big data analytics, banks are able to manage the risks, profile customers, analyse trends and improve customer service (Amer & Shoukry, 2023).The Financial sector cannot afford to downplay the role that big data analytics capabilities possesses on the organisation’s performance.

1.3 Research problem

Many scholars have researched about the valuable benefits of big data analytics (Abdullahi et al., 2020; Amer & Shoukry, 2023; Eni et al., 2023; Moody, 2015). In addition, several studies have indicated positive improvement and transformative impact of big data analytics in financial sectors like; risk management, cost reduction, development of new products, improvement of customer experience, fraud detection and marketing efforts (Abdullahi et al., 2020; Amer & Shoukry, 2023; Aziz et al., 2023; Eni et al., 2023; Hammam, 2024; Hasan et al., 2020). Moreover, big data analytics influences decision making and innovation in South African banking sectors (Pillay & Van Der Merwe, 2021).

Organisation should not only focus on big data analytics, also, ensure that they have the right capabilities to fulfil the strategy. The studies by Mikalef et al. (2020), Rizvi et al. (2023), Shdifat (2022) argues that big data analytics human and non-human capabilities investment assist an organisation to respond well towards uncertainties. In support, the findings of big data analytics capabilities tangible, human and intangible by Hollong (2022) indicates that capabilities positively impact the South African retailers.

Big data, together with big data analytics have become one of the most researched topics recently, especially in the financial sectors, however, not so much about the big data analytics capabilities' impact in financial sectors, especially in South Africa. Several studies focused on the big data analytics capabilities and its impact on the sustainability performance of the firm (Fantazy & Tipu, 2023; Said et al., 2023; Sall et al., 2023), culture (Jie, 2024; Kissi, 2024), decision-making (Alsolbi, 2023; Awan et al., 2021; Faridoon et al., 2024; Hussain et al., 2021), innovation (Binsaeed et al., 2023; Lozada et al., 2023; Sohu et al., 2023; Zhang & Yuan, 2023) and competitive advantage (Chong et al., 2023; Rianawati et al., 2024; Rizvi et al., 2023). In terms of firm performance, Shdifat (2022) provided evidence on the influence of big data analytics capabilities and one in South Africa with the focus on retailers (Hollong, 2022).

Ferraris et al. (2019) confirms that organisations that consists of more big data analytics capabilities than others, have increased their performance in Italian SMEs. For manufacturing firms that use big data analytics for data-driven insights, its capabilities drive the quality of decision making (Awan et al., 2021). Yu et al. (2021) states that the big data analytics capabilities positively impact the inter-functional integration, hospital-patient integration, and hospital-supplier integration of the hospital's supply chain integration. This assists the healthcare system in better operational flexibility of the supply chain and better handle unforeseen disruptions. Supported by Basile et al. (2024) deploying the technology capabilities improves the quality of health care services. This emphasis the need to invest in big data analytics capabilities in healthcare.

Moreover, big data analytics capabilities positively impacts firm performance, organisational agility, marketing and organisational innovations in hotel industry (Khalil et al., 2023). Hollong (2022) revealed that retailers in South Africa needs all human, tangible and intangible big data analytics capabilities to improve firm performance. Furthermore, his findings revealed that mostly tangible and intangible capabilities were highly associated to firm performance and retailers need to strengthen their human capabilities. On the other hand, innovation capability and decision-making are found to be the mediators of big data analytics and firm performance at telecommunication and banking industries in Pakistan (Hussain et al., 2021). In addition, Chinese organisations with well-established big data analytics capabilities found to be highly innovative (Zhang & Yuan, 2023).

Although big data analytics promises better firm performance, the perceived value of the actual impact of acquiring the big data analytics capabilities on firm performance has not yet been explored in other industries or countries. This research targeted the financial sectors in South African and explored the impact of big data analytics capabilities on the organisation's performance. The research used the three categories of big data analytics capabilities from (Gupta and George, 2016; Hussain et al., 2021); namely, tangible, intangible and human

resources to categorise capability dimensions by Arunachalam et al. (2018) and Maréchal (2020), bridging the gap by combining the capabilities.

This study responded to the call made by Hollong (2022) to research more on the impact of big data analytics capabilities on firm performance in other sectors of South Africa, as the research field on big data analytics capabilities remains relatively unexplored (Huynh et al., 2023). The research contributed to the big data analytics capabilities body of knowledge, literature and its impact to the performance of financial sectors in South Africa, by drawing in the resource-based theory and dynamic capabilities theory. The findings of the study have a potential of assisting South African financial sectors to maximise the firm performance by using big data analytics capabilities.

1.4 Research objectives

Based on the gap highlighted above, this research focused on the below objectives that assisted in answering the research question.

1. To investigate the impact of big data analytics capabilities and firm performance in South African financial sectors.
   1.1. To investigate the impact of tangible big data analytics capabilities and firm performance in South African financial sectors.
   1.2. To investigate the impact of intangible big data analytics capabilities and firm performance in South African financial sectors.
   1.3. To investigate the impact of human big data analytics capabilities and firm performance in South African financial sectors.
2. To investigate the impact of Dynamic Capabilities as a mediator between the big data analytics capabilities and firm performance

1.5 Rationale

Big data analytics was adopted by many financial sector companies in South African to provide insights that assist in better decision making. The data is received in structured, semi-structured and/or unstructured data formats, then undergoes the transformation to create value into the organisation (Sneha & Keerthana, 2021). To do so, many organisations invest in big data analytics capabilities to extract meaningful insights (Maréchal, 2020). There have been extensive research about the adoption of big data and the successful impact of big data analytics on the company's performance (Akter et al., 2016; Chong et al., 2023; Ferraris et al., 2019; Graham & McCloskey, 2021; Hollong, 2022; Shdifat, 2022; Wamba et al., 2017; Yasmin et al., 2020), however, not so much on the impact of possessing big data analytics capabilities on the organisation's performance in the South African context. The study contributed to the big data analytics capabilities literature locally and created some awareness in repositioning of big data analytics capabilities to maximise performance.

1.6 Delimitations of the study

This study is limited to financial sectors in South Africa registered on South African Reserve Bank, namely, banks, fintech, insurance and payment organisations. The study described the impact of big data analytics capabilities after the firm has adopted and implemented the big data analytics, regardless of the duration it has implemented big data analytics. This excludes the barriers of big data analytics adoption and the challenges of big data analytics in financial sectors.

1.7 Definition of terms

Big Data - hight volume of data, that is received at a high rate, in different structures and are unable to be processed using the traditional data processes (Sneha & Keerthana, 2021)

Big Data Analytics - a process of combining, transforming, managing and analysing data from different sources to derive valuable insights (Salleh & Janczewski, 2016)

Big Data Analytics Capabilities - the necessary resource that an organisation deploy and uses to enable it to fully leverage on big data analytics (Hollong, 2022)

Firm Performance - the degree in which a firm performs better or hold a superior performance position as compared to its competitor (Aziz et al., 2023)

1.8 Assumptions

The research proposes that strengthening the big data analytics capabilities may result in improved firm performance. This study assumed that the organisation's tangible, intangible and human resources big data capabilities influence the firm's market and operational performance. Moreover, the firm requires the combination of all the capabilities to sustain competitive advantage. Furthermore, it is assumed that the firm requires the dynamic capabilities to continuously assess and re-develop its capabilities. The study further aimed at providing evidence of these assumptions.

In addition, it is assumed that the participants of this study will answer all the question truthfully, in the interest of assisting the researcher in obtaining quality feedback. Furthermore, the study assumed that using the quantitative research to collect data from the sample that represent the entire population is the best approach to test the hypothesis.

1.9 Chapter Outline

This study is systematised into six chapters, and they are summarized in the below table.

Chapter Number	Title	Brief Summary
1	Introduction	This chapter introduces the study. The chapter presents the study background, identify the research gap that leads to the research problem, purpose of the study and its objectives. Additionally, highting the study rationale, delimitation and assumptions.
2	Literature review and theoretical framework	This chapter presents a detailed review of study literature on the relationship between big data analytics capabilities and firm performance, with mediating effect of dynamic capabilities. Moreover, two theories that are significant to this study are discussed. Lastly, the conceptual framework and study hypothesis are developed.
3	Research methodology	This chapter presents the methodology used in the study. It further describes the tools and techniques used to collect and analyse the data. Additionally, it explained the population and sample size, together with the ethical considerations.
4	Presentation of results	This chapter presents the descriptive analysis of the collected data from the surveys, developed the measurement model and CB-SEM model to test the relationship between dependent an independent variable
5	Discussion of results	This chapter provides the major findings the of the research using the developed hypothesis.
6	Conclusions and recommendations	This chapter presents the study conclusions. Moreover, limitations, study contributions and recommendations for future studies are discussed

Table 1: Research Outline

1.10 Chapter Summary

Chapter 1 introduced the background of big data analytics and provided the overall understanding. It further provided the gap in big data analytics, research problem and objectives that the researcher aims to address. Additionally, provided the study rationale, delimitation and assumptions. In the next chapter, a critical review of the study literature is provided.

CHAPTER 2. LITERATURE REVIEW AND THEORETICAL FRAMEWORK

2.1 Introduction

This chapter begins by examining the concepts of big data and its characteristics, thereafter, the big data analytics. Moreover, the types of big data analytics and its applications in financial sector are outlined to provide a better understanding. Using reference of previous studies, the big data analytics capabilities and firm performance are explained, together with the relationship between the two. Later, the mediating effect of dynamic capabilities is outlined. Amidst the use of resource based view and dynamic capability theories as they apply to firms, it has been hypothesised that big data analytics capabilities can potentially lead to increased dynamic capabilities (Yoshikuni et al., 2023). Resource based theory was used to explain the big data analytics resources required and dynamic capability theory to explain how organisations can continuously reconfigure its resources to stay in competition. The measures were constructed using our key variable intangible big data capabilities (intangible, tangible and human resource) (Gupta & George, 2016), dynamic capabilities and firm performance (market and operational).

2.2 Big Data

Big data is defined as large datasets that requires the use of computer to make sense of it (Nani, 2023). Today, organisations around the world experience a flood of big data that it is collected from social medial, applications, internet, etc.(Jawad & Al-Bakry, 2022). This data exponentially increases as these sources interact with each other and result in traditional databases not being able to handle (Elgendy & Elragal, 2014). According to McIntyre (2018) by 2025, data will be more valuable than oil, which means, data is becoming a critical value to organisations and will determine winners in business.

The era of Big Data has brought organisations sitting with large structured, unstructured, and semi-structured data (Tsai et al., 2015). The data comes in a form of text, audio, images, etc. that varies in size and frequency. Big data is characterised by its three key features, namely, Volume, Velocity and Variety to define the complexity of the data sets as shown in figure 1.

Volume: The quantity or size of the data sets. This is because the data comes from multiple sources and cannot be processed by the traditional databases.

Velocity: The rate or speed in which the data is generated, changes and is stored in the database. Most of the big data are generated in real-time and needs to be processed immediately.

Variety: The different formats and types of the data sets. These include structured data such as excel, relational database, comma-separated values and directories. Unstructured data includes videos, texts, images and audios while semi-structured data can be XML or JSON files.

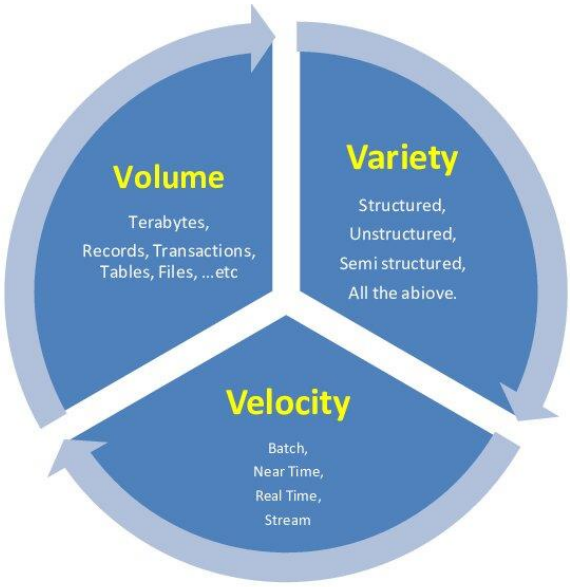

Figure 1: 3 Vs of big data (Al-Barhamtoshy & Eassa, 2014)

2.3 Big Data Analytics

Today, organisations do not only want to collect the data, however, they want to understand and derive value from it (Elgendy & Elragal, 2014). Big Data Analytics is a process of combining, transforming, managing and analysing data from different sources to derive valuable insights (Salleh & Janczewski, 2016). The traditional data storages and data processing techniques are unable to handle large amount of data (Jawad and Al-Bakry, 2022), therefore, specialised tools and advanced analytics techniques are used to analyse the data (Alsolbi, 2023; Elgendy & Elragal, 2014). The process assist in discovering hidden patterns and structures that are beneficial for decision making (Alsolbi, 2023). Big Data Analytics has enabled organisations to discover insights that were previously unknown, assists in decision making and gain sustained competitive advantage (Keshavarz et al., 2021; Nani, 2023).

Organisations have been investing in technologies that enhances performance and one of the technologies are big data analytics (Sivarajah et al., 2024).

2.3.1 Types of Data Analytics

Analytics is categorised in four types that uses hidden patterns to development organisational strategy and drive the decision making. Two of this analysis, descriptive and diagnostic, provide insights of events in the past. Descriptive analytics, as the mostly used analytics, provide statistics and reports to assist in understanding the overall performance and while diagnostic analytics uses historical patterns from data to discover the root cause of the event (Alsolbi, 2023; Amer & Shoukry, 2023). Predictive and Prescriptive analytics provide insights of the future. Predictive analytics uses the historical evets and trends to predict the future while prescriptive analytics provide guidance of the actions to be taken (Hollong, 2022; Sharif, 2023). Table 1 Below summarises the four types of analytics.

Past Looking	
Descriptive	Diagnostic
It provides insights of what has happened	It provides insight of why it happened
Future Looking	
Predictive	Prescriptive
It provides insights of what is likely to happen	It provides insights of actions to be taken to prevent certain things

Table 2: Types of Data Analytics

2.3.2 Big Data Analytics in Financial Sector

One of the industries that benefited from big data analytics is the financial sector. There is a growing appetite in investments, insurance and banking sectors to take advantage of big data analytics to improve the financial, operational and marketing performance (Surbakti et al., 2020). Some of the data sources that can be found in financial sectors are social medial, emails, transactional data, point of sales, geographic data, images, audios and sensors (Bayat & Mungai, 2018). Below are some of the applications of big data analytics in Financial Sectors.

Customer spending patterns: With access to the customer's historical transactions stored in the database, financial sectors are able analyse and understand the customer's spending patterns in relation to the income (Aziz et al., 2023). In financial sector, this analysis might assist in broadening product offerings, risk assessment and loan & mortgage evaluation. Additionally, big data analytics assist in predicting the markets and meet customer needs (Buldoo, 2018).

Customer Segmentation: The financial sectors can use the data to segment its customers into different profiles to understand their customer's interests and possibilities of cross-selling products (Fedak, 2018). This can also assist in

knowing which products are performing more than the others, determining pricing and selecting the right marketing methods (Hammam, 2024).

Fraud Detection: With the assistance of big data algorithms and real-time analytics, financial sectors are able to know the transactional patterns of the customer(Amer & Shoukry, 2023). This assists in detecting any anomalies and prevent the threat or fraudulent activities(Soltani et al., 2021).

Risk Management: Big data analytics assists in mitigating the risk of financial sectors running into a loss after repayment failures of loans (Moody, 2015; Soltani et al., 2021). The analytics models automatically provide insights of the customer's affordability using the historical spending habits and credit reports (Hammam, 2024).

Big data analytics assists organisations in making better decisions of choosing effective business models and marketing strategies through the valuable insights derived from the data (Soltani et al., 2021). Organisations now understand customers and the business better than before (Hammam, 2024). Moreover, it assists in better understanding of customer trends, often in real time (Cheng et al., 2023). From the financial sector perspective of big data, the organisation can leverage on big data analytics for decision-making.

2.4 Big Data Analysis Capabilities

Due to the proven benefits of using big data analytics, organisations have invested in capabilities that enables them to unlock the benefits (Arunachalam et al., 2018; Hollong, 2022). Moreover, big data analytics capabilities are the necessary resources that an organisation deploy and uses to enable it to fully leverage on big data analytics and consecutively to strengthen firm performance (Hollong, 2022). These capabilities are used to collect, process and store data, uncover patterns and provide valuable insights (Cheng et al., 2023). Big Data Analytics Capabilities is defined as "the ability of a firm to provide insights using data management, infrastructure, and talent to transform a business into a

competitive force" (Akter et al., 2016).In the same line, Gupta and George (2016) define it as “"a firm’s ability to assemble, integrate, and deploy its big data-specific resources".

Akter et al. (2016) classified the capabilities into three dimensions as infrastructure, staff skills and management. In the same line, Wamba et al. (2017) suggested the dimensions to be classified as infrastructure, talent and data management. Drawing on resource based view theory, Gupta and George (2016) has classified the capabilities into three categories; tangible, intangible and human resources. Previous studies have noted the need to use tangible, intangible and human resources capabilities as a combination to exploit and fully benefit from big data analytics (Arunachalam et al., 2018; Bhatti et al., 2022; Huynh et al., 2023; Kruesi & Bazelmans, 2023). The research adopted the three categories of big data analytics capabilities namely, tangible, intangible and human resources to categorise capability dimensions by Arunachalam et al. (2018) and Maréchal (2020). In this study, the researcher examine the importance and impact of each resource.

2.4.1 Tangible Capabilities

The tangible resources are the tools that assists in processing, storing and analysing the data (Huynh et al., 2023). Resource based view states that tangible resources are those that can be tradable in the market (Gupta & George, 2016). In relation to big data analytics, this includes the infrastructure, technology and data (Mikalef et al., 2020; Wamba et al., 2017).

Data

It is often said, “Data is the new gold”. Previously, data used to be received in a structured format and could easily be handled by the traditional data storages like relational databases (Buldoo, 2018). Today, large volume of data is received frequently in different formats, internal and external (Gupta & George, 2016). According to Bayat and Mungai (2018), some of the financial sector’s sources of

data are transactional data, log data, events, emails, social media, sensor data, external feeds, RFID scans/POS data, free-form text, geospatial data, audio, images and videos. The financial sector is one of the industries that are data intensive as its data sources are interconnected and generates real-time data. Integrating the internal and external data sources can create a creditable and valuable insights (Hussain et al., 2021).

Côrte-Real et al. (2020) states that data can be a resource for decision-making only if it is of decent quality, furthermore, good data quality directly impacts the operational performance.

IT Infrastructure

This refers to the technological infrastructure that provides the capability to handle large data (Cheng et al., 2023). The IT infrastructure is used as a basic resource to build a foundation for the big data analytics (Jeble et al., 2018). Rizvi et al. (2023) emphasise that organisations having an advanced IT infrastructure, increases the probability of big data analytics adoption. Infrastructure needs to be flexible to adapt and respond to fit the change in or revolving requirements and data (Alzboun, 2023).

The purpose of IT infrastructure is to enable the large collection of data, analyse and produce meaningful insights (Sahoo et al., 2023). Previous studies indicated the criticality and importance of infrastructure, as an instrument to handle and integrate big data (Mikalef et al., 2020; Naz et al., 2023; Soltani et al., 2021).

Although Infrastructure is the backbone of the data processing and essential pillar for big data analytics capability (Shdifat, 2022), it is one of the resources that has vast variety of substitutes in the markets, therefore, it is not sufficient to improve firm performance(Graham & McCloskey, 2021). Relying on it alone to created competitive advantage is not enough (Aydiner et al., 2019). In Contrary, Wamba et al. (2017) argues that amongst all the big data analytics capabilities, Infrastructure capability coupled with personnel capability, seems to have the highest impact on the firm performance. However, the differences with other

capabilities are not major, this implies that all capabilities are equally important to build the big data analytics capabilities. In this study, Infrastructure is presented as a tangible big data capability.

Technology

This refers to the flexibility that big data analytics specialists can "quickly develop, deploy, and support a firm's resources" (Maréchal, 2020). The technology enables better system integration, reporting and visualisation (Y. Wang et al., 2019). Acquisition of new and advanced technology that facilitates the extraction, transformation, storage and analysis of data is a necessity for organisations that deals with real-time, large volumes of data (Hussain et al., 2021).

Prior studies highlight that having a flexible technology enables handling large volume, variety and varsity of the data from different sources (Abdullahi et al., 2020; Akter et al., 2016; Basile et al., 2024). Mikalef et al. (2019) puts forth that technology is one the basic need to process sophisticated structured, semi-structured and unstructured data. In the same line Awan et al. (2021) state that technology is a vital tool to process and transform data. Sivarajah et al. (2024) claims that mostly, firms that experience gains of firm performance from technology investment, are those that have moderate uncertainty.

2.4.2 Intangible Capabilities

The intangible resources are the norms, beliefs, behaviour and values that an organisation has developed to exploit big data, which are the data driven and learning organisations culture (Hussain et al., 2021; Jie, 2024; Maréchal, 2020). This resource facilitates how an organisation can survive in dynamic markets (Gupta & George, 2016).

Data-driven culture

Data-driven culture refers to an organisation that mostly use insights from data rather than intuitions to make decisions (Hussain et al., 2021). To fully leverage

on big data analytics, firm requires certain organisational culture (Graham & McCloskey, 2021). As decisions are made at every level of an organisation, it is important to make data-driven decisions to improve customers experience, improve products offering and operational performance (Rizvi et al., 2023). It has been found that decisions made based on data have the potential to improve firm performance (Alyahya et al., 2023; Pillay & Van Der Merwe, 2021).

Firms need to develop a culture of exploring new and latest knowledge to contributes to building dynamic big data analytics capabilities (Jeble et al., 2018). Consequently, adopting the data-driven culture within an organisation produce promised value of big data (Yasmin et al., 2020). When data-driven decision making is embedded as the firm's culture, firm performance improves (Pillay & Van Der Merwe, 2021). Moreover, the data-driven insights need to be shared and consumed across the whole organisation to enable action in an organisation at large (Graham & McCloskey, 2021).

Learning Organisation culture

Learning organisation is a "process through which firms explore, store, share, and apply knowledge" (Gupta & George, 2016). With the daily technology emergence and advancements, employees need to continuously expand knowledge to avoid being outdated (Dahiya, 2021). Employees with new knowledge are capable of identifying the organisation's strengths, weaknesses, opportunities and threats (Hussain et al., 2021). Aziz et al. (2023) argues that learning organisation results in product sales quality and improved decision-making. Moreover, to maintain high skilled personnel and sustained competitive advantage, organisations need to encourage a learning culture (Maréchal, 2020). Jeble et al. (2018) argues that firms with deep rooted learning organisations culture influence the big data initiatives and innovation. In addition, learning organisation drives a firm's digital analytics maturity (Graham & McCloskey, 2021). Firms that adopts organisational learning develop skills needed to carry-out big data analytics (Binsaeed et al., 2023).

2.4.3 Human resource capabilities.

The human resources are professional skills and ability that the staff comprises in order to analyse big data, these are management and personnel skills (Lozada et al., 2023). This refers to the "knowledge, experience, business insights, relationship, problem-solving abilities, and leadership qualities of its employees" (Hollong, 2022). Big data analytics requires new set of skills (Shdifat, 2022).

The combination of a good big data analytics human resource and managerial resource creates a valuable and rare firm attributes, these constructs are complicated in nature as they influence process and decision-making (Aydiner et al., 2019).

Personnel Skills

This refers to the professionals that are responsible for extraction, processing, organising and analysing data (Y. Wang et al., 2019). These are people who possesses technical skills like artificial intelligence, data analysis, programming and machine leaning (Said et al., 2023). High level technical skills are needed to be able to use new technologies and process big data (Hussain et al., 2021). Cetindamar et al. (2020) states that big data is one of the scarce and demanded skills in Information Technology profession. Sall et al. (2023) highlighted that some organisations have challenges of having the best technology without good personnel skills. For example, South African state-owned entities relied only on some highly experienced employees that upskills themselves through attending conferences, engagements with others withing the same industry and studying latest industry related documents (Stock, 2022). Therefore, it is crucial for organisations to possess the right technical analysis skills to deal with big data.

Iftikhar et al. (2021) argues that the ability to analyse data is driven by human knowledge and experience, therefore, knowledge within the organisation should be natured. Joubert et al. (2023) further argues that a combination of the right data and skilled personnel paves the way for data-driven culture in an organisation. Big data personnel needs to gain new knowledge by upskilling and

sharing amongst each other to stay in a sustainable competitive advantage (Jeble et al., 2018). Another study reveals that to adopt big data analytics and reach digital maturity, people is one of the key enablers (Hammam, 2024).

Personnel can be developed through hiring, upskilling and partnership with third party IT companies (Jeble et al., 2018). Amongst all the big data analytics capabilities, personnel part of the human capabilities seems to have significant impact on the firm performance (Wamba et al., 2017). In addition, Akter et al. (2016) found that amongst the big data analytics capabilities, talent is emerging as the strongest capability.

Managerial Skills

Managers are the people who are responsible developing an implementation plan of big data analytics resources (Zhang & Yuan, 2023). Managerial skills involves planning to identify opportunities, making big data analytics investment decisions, coordination and controlling of resources (Binsaeed et al., 2023; Maréchal, 2020). Furthermore, this resource involves managing the data quality, data governance and data lifecycle (Alzboun, 2023). Additionally, understanding the insights provided by the technical team and apply them accordingly (Shdifat, 2022). Management's other responsibilities are formulating strategies and policies that support big data analytics (Chatterjee et al., 2023).

Iftikhar et al. (2021) argues that firm's key resource is management's ability to make decisions through big data analytics. Managers who make decisions based on big data analytics become more productive and effective than others (Aydiner et al., 2019). Furthermore, top management and executives' objective must ensure the culture of sharing knowledge from top to bottom. Moreover, managers and executive should enforce data-driven culture in all big data projects (Mikalef et al., 2019a).

Management is a critical resource for firm performance as it is responsible for building the culture and leading big data projects, therefore, the success of a project relays on the manager's ability to combine the right skilled team members,

technology and infrastructure (Jeble et al., 2018). Akter et al. (2016) has found that big data analytics management capability has an impact on achieving long-term sustainable competitive advantage of the organisation. Moreover, managers with deep knowledge of the business entities such as customers, partners, business units and also understanding the big data analysis, can easily apply the discovered insights to improve performance (Hussain et al., 2021). Therefore, this capability cannot be neglected in big data analytics.

2.5 Firm Performance

Firm performance refers to the degree in which an organisation performs better or hold a superior performance position as compared to its competitor (Aziz et al., 2023). Furthermore, the high level of big data analytics capabilities highly impacts the performance of the organisation (Graham & McCloskey, 2021; Gupta & George, 2016).

In this study, the focus is on the market performance and operational performance to measure the firm performance of the financial sectors in South Africa. Market performance refers to the ability to quickly and rapidly explore the markets to develop new products and services, the output of such being the market share (Gupta et al., 2019). Operational performance is defined as “the strategic dimensions in which companies choose to compete”, resulting in productivity, profits and return on assets (Cheng et al., 2023) . According to Aziz et al., (2023), in Malaysian banking sectors, big data analytics capabilities impact 40% of the marketing performance and 30% of the operational performance. Therefore, this is a prove that big data analytics have the potential to improve firm performance.

Through big data analytics, organisations can improve customer satisfaction and loyalty by exploration of new opportunities and threats, consequently, improve marketing and operational performance (Khalil et al., 2023). With big data analytics in place, firms are able to accurately forecast consumer purchase

behaviour and make better decisions for the betterment of firm performance (Chatterjee et al., 2023). Strong big data analytics can scan external factors and respond to business challenges to improve performance (Sahoo et al., 2023).

One of the capabilities that improves the operational performance is infrastructure, it enhances the way data is collected, stored and processed (Al-Surmi et al., 2022). Dubey et al. (2020) argues that improved operational performance through big data analytics does not come instantly, it comes overtime due to dynamic situations.

2.6 The Impact of Big Data Analysis Capabilities on Firm Performance

Some organisations are unable to get full value of the investment in big data analysis due to the missing link between the big data analytics capabilities and the firm performance (Keshavarz et al., 2021). However, firms that use their capabilities have experienced performance gains (Akter et al., 2016; Nani, 2023). In line with this, recent studies have confirmed the positive relationship between the big data analytics capabilities and firm performance (Aziz et al., 2023; Hollong, 2022; Hussain et al., 2021; Iftikhar et al., 2021; Shdifat, 2022).

Previous studies have encouraged organisations to build on big data analytics capabilities as it has proven its contribution to firm performance, specifically marketing and operational performance (Graham & McCloskey, 2021; Huynh et al., 2023; Sabharwal & Miah, 2021). Iftikhar et al. (2021) tested the relationship between big data analytics and operational performance, the study concluded that developing and integrating big data capabilities maximise operational performance and long-term competitive advantage. Furthermore, findings by Khalil et al. (2023) confirms that an organisations that leverage on big data analytics capabilities gain valuable insights.

Moody (2015) argues that big data analytics facilitates the automation of marketing that is alighted with the customer's profile, while minimising the costs

of marketing. Moreover, analytics provide insights about opportunities and new markets, this reduces the time that financial sectors enters the market (Hammam, 2024; Soltani et al., 2021). According to Aziz et al., (2023), in Malaysian banking sectors, big data analytics capabilities impact 40% of the marketing performance and 30% of the operational performance.

Through study evidence, leveraging on big data analytics capabilities to identify areas that requires special attention, shift the firm's growth from linear to exponential growth in manufacturing sector (Sahoo et al., 2023). Relating to this, Hollong (2022) argues that firm that possesses big data analytics capabilities have experienced productivity, profitability, increase in sales and return on investment. These aspects positively impact the firm performance.

2.7 The mediating role of Dynamic Capabilities

The mediation effect of the dynamic capability suggests the organisation's ability to effectively use its resources to dynamically sense and scan opportunities to maximise its performance (Yoshikuni et al., 2023). Cao et al. (2022) suggest that through big data, dynamic capabilities can be developed to enhance firm performance. Big data analytics enables the dynamic capabilities (Chatterjee et al., 2023). In the same direction, Mikalef et al. (2020) examined how dynamic capabilities are supported by big data analytics capabilities to improve firm performance in an unpredictable environment.

Although dynamic capabilities was discovered by (Teece et al., 1997), recent studies have tested the relationship between dynamic capability and innovation (Bhatti et al., 2022; Stock, 2022; Yoshikuni et al., 2023), ecosystem innovation (Linde et al., 2021), digital transformation (Dlamini, 2021; Naidu, 2023) and firm performance (Aziz et al., 2023; Bhandari et al., 2020; Naz et al., 2023). In addition, as a mediation between big data analytics capabilities and firm performance (Wamba et al., 2017) and big data analytics capabilities and innovation (Bhatti et al., 2022; Mikalef et al., 2019b). While many studies look at

dynamic capability using its three components: sense, seize and reconfigure opportunities, in this study, the researcher analyses the dynamic capability as a whole. This is supported by the results from Linde et al. (2021) study that individual components of dynamic capabilities are not sufficient to provide sustainable competitive advantage, rather use a combination to manage ecosystem innovation successfully.

An organisation needs the capability to sense and seize opportunities in a rapidly changing environment to sustain its competitive advantage (Cao et al., 2022). Such assists in new product development and identifying new markets (Graham & McCloskey, 2021). In addition, for an organisation to achieve a long term competitive advantage, it needs to have the ability to establish and control its resources in dynamic markets (Rizvi et al., 2023). To support this, dynamic capabilities facilitated ecosystem innovation initiatives that drove sustainable competitive advantage in smart-city ecosystem (Linde et al., 2021). Furthermore, it was found that dynamic capabilities enable firms to adapt to continuous evolution of customer's needs, new entrants, new markets and latest technologies (Samsudin & Ismail, 2019). Moreover, dynamic capabilities influence firm performance by observing best practices and maintaining close relationships, thus, resulting in change of markets and revenue enhancements (Yoshikuni et al., 2023).

Dynamic capabilities lead to new capabilities that enhances existing capabilities within the firm and influences digital transformation (Naidu, 2023). Moreover, dynamic capabilities influence the "rapidly available, timely, accurate, and comprehensive information" process to identify opportunities and threats (Aydiner et al., 2019). Khalil et al. (2023) confirms that the firm's continuous reconfiguration of big data analytics capabilities makes an organisation to adapt to rapidly changing markets. Equally, dynamic capabilities enable pool of options that helps in changing the strategies and techniques to align with external changes and increase firm performance (Naidu, 2023). Therefore, organisations need to be capable of continuously modifying its resources.

Mikalef et al. (2020) highlight the importance of joined big data analytics capabilities on the potential to positively influence dynamic capabilities, resulting in the firm's evolutional fitness and in turn positively influence the firm performance. In contrary, Wilden et al. (2013) argues that Dynamic capabilities does not positively affect the firm performance, especially sales growth, provided there are context-dependencies such as organisational structure and competitive intensity. Moreover, dynamic capabilities come with huge costs, which may result in short-term performance and loss of revenue. On the other hand, findings by (Wamba et al., 2017) states that the direct relationship between big data analytics capabilities and firm performance is stronger than with a mediating effects of process-oriented dynamic capabilities.

When the firms manage to adapt to external environments, it tends to affect its firm survival and growth (Dlamini, 2021). As an example, Graham and McCloskey (2021) found that during the COVID-19 pandemic and rapidly regulatory changes in retail banking, organisations that have built big data analytics capabilities performed better. While in South African state-owned entities, with lack of dynamic capabilities, it affected the evaluation of market trends and inability to prevent crisis (Stock, 2022). An addition of Dynamic Capabilities to this study emphasis the need to recreate and renew strategic capabilities to stay in a competitive position.

2.8 Analytical Framework

2.8.1 Resource Based View of the firm.

Resource Based View is the firm's ability to outperform others due to the strategic resources it possesses, to sustain competitive advantage (J. B. Barney, 1996). It examines the relationship between the firm's internal characteristics and the performance. The theory was originally proposed by Birger Wernerfelt in 1984 and later developed by Jay B. Barney in 1991. According to Wernerfelt (1984), a firm's resource is any internal tangible or

intangible assets that can be a strength or weakness of the firm. Barney (1991) defines competitive advantage as a firm's ability to implement a unique strategy that creates value; that other competitors have not yet implemented. When the competitors are unable to duplicate the strategy, it is called sustained competitive advantage. Apart from the current known firm's competitors, new entrance into the market are also considered (Brock, 1983).

The resource based view theory is based on two assumptions; heterogeneous and immobility (Wernerfelt, 1984). It is assumed that organisations within the same industry may not have identical resources, and the resources may not be mobile. According to Barney (1991), for a organisation's resource to sustain the competitive advantage, it requires four attributes: (1) valuable – the resource should add value by exploiting opportunities and neutralising competition , (2) rare – the resource is scarce to competitors, (3) inimitable – the resource is expensive to imitate and (4) substitutability – the resource uses structured processes that are difficult to substitute. In addition to this, Hussain et al. (2021) classifies the resources as intangible, tangible and human resources. In this context of the study, organisations can leverage on big data analytics as the strategic resource to archive sustained competitive advantage.

The resource based theory has been widely used since its origin to describe the relationship between the firm performance and organisational resources across business disciplines (Hollong, 2022). The theory has been applied in industries like hospitality and tourism to determine the value, inimitability and rarity that resource such as climate (Craig et al., 2023), beaches (X. Wang et al., 2024) and blue economy (Rianawati et al., 2024) has on the firm performance of tourist attractions (Kruesi & Bazelmans, 2023). Contrary to that, Chen and Ling (2024) argues that resource sharing can improve innovation in tourism. Moreover, in multimarket firms to illuminate if resource advantage provides competitive advantage against the firm's rivalry (Varadarajan, 2023) and Jyoti and Efpraxia (2023) in their exploration of the

business alliance ecosystem between cloud computing service providers found that reputation is one of the most important resource to create partnership.

Moreover, Varadarajan (2020) states that customer information as a resource may lead to customer insights that enables a firm to deeply understand the needs of customers and fulfil them. Big data analytics workforce skills is amongst the tactic resource in the digital era to drive innovation and improve performance in supply chain (Bag et al., 2021). Further, resources such as a culture of organisational learning influence the innovation (Ghasemaghaei & Calic, 2020). Moreover, it has been discovered that big data analytics capabilities can lead to sustained competitive advantage (Keshavarz et al., 2021; Wamba et al., 2017). Resource based theory can also be used to discover the resources that a firm needs to compete (Donnellan & Rutledge, 2019).

One of the limitations of resource based theory is it only explain the firm competitive advantage in the static environment (Samsudin & Ismail, 2019). In addition, the theory does not clearly state how the resources are achieved (Bhandari et al., 2020). Moreover, resource based theory does not distinguishes the difference between a resource and a capability (Keshavarz et al., 2021).There have been advancements in the past that aimed at bridging the gap of not looking at competitive advantage at a particular point in time. Some of the theories that were developed to complement the resource based theory are attention-based view theory which argues that the firm's attention to certain behaviours and structures influences the decision-making (Ocasio, 1997), knowledge-based view theory that emphasises the importance of knowledge and organisational learning to archive competitive advantage (Grant, 1996) and dynamic capability theory that assists organisations to adapt to change (Teece et al., 1997).

The resource-based theory is significant to this study as it is important to know which big data analytics specific resources does a firm possesses and an

appropriate way to use them. The study approaches the big data analytics capabilities as valuable resources that can assist a firm in attaining competitive advantage and sustainable performance.

2.8.2 Dynamic Capabilities Theory

Dynamic Capabilities Theory was introduced by David Teece, Gary Pisano, and Amy Shuen in 1997 in their study of trying to understand how firms survive and sustain firm-level competitive advantage. The theory highlights the firm's ability to use its resources to adapt and respond to rapidly changing environment (Jie, 2024). Teece et al. (1997) describe the dynamic capabilities as the firm's ability to use its internal and external competencies and resources to respond to constant change. Dynamic Capabilities is one of the theories that are an extension of the resource based theory (Gupta & George, 2016).

Big data analytics capabilities enable the organisation to dynamically leverage on data-driven insights to improve firm performance in an increasingly demanding and rapidly changing environment (Jie, 2024). The basic assumption of the dynamic capabilities framework is that core competencies should be used to create or modify short-term competitive positions that can be used to build longer-term competitive advantage, from the perspective of dynamic and fast-moving environment (Teece et al., 1997).

Previous researches have highlighted that firms that are performing well are those that respond to dynamic and unpredictable environment (Clulow et al., 2003; Gupta et al., 2019; Sahoo et al., 2023). Naidu (2023) argues that digital transformation can be enabled through operational dynamic capabilities in mining, while Dlamini (2021) argues that seizing dynamic capability in financial institutions improves innovation, especially for the asset-intensive firms. In Addition, Sahoo et al. (2023) explains how manufacturing firms can sustain competition in a dynamic and unpredictable environment. Organisations that face rapid changes such as mobile network operators need

to learn how to explore and exploit resources to adapt and radically innovate in response to changing environments (Ramukumba, 2021). Furthermore, dynamic capabilities can be used to conceptualise the relationship between big data analytics and cloud enterprise resource planning (Gupta et al., 2019). It has been found that dynamic capabilities influences how firms are able to manage change in customer behaviour, both local and international markets (Samsudin & Ismail, 2019).

As stated in the previous section that the resource-based theory has limitations of explaining the competitive advantage in a static environment, adding the dynamic capability theory to this study attempts to fill the gap of explaining competitive advantage in a fast-changing environment that we are facing today. Moreover, differentiating between the resource and capabilities enable the firm to know what they are able to do with the resources they own (Keshavarz et al., 2021). Stock (2022) has proven that lack of dynamic capabilities deployment in South African government state owned entities has resulted in lack of innovation and entities not able to develop new competencies quicker, which severely affected the firm performance. This emphasises the need for this study to use the dynamic capability framework in relation to the firm's resources and its performance. An addition of this theory will ensure long-term firm performance.

2.8.3 Conceptual Framework

As the study leverages on the prior studies, this study's approach proposed the research model in figure 2 using resource-based view theory and dynamic capabilities theory. In accordant to Gupta and George (2016); Sabharwal and Miah (2021); Wamba et al. (2017), this study proposes big data analytics capabilities using three dimensions, namely; intangible, tangible and human resources. The model consists of Big Data Analytics Capabilities as the third order, the three Big Data Analytics Capabilities dimensions as the second order and seven sub-dimensions as the first order.

The model of this study illustrates the direct impact of big data capabilities on firm performance. The study further argues that big data analytics capabilities have a significant impact on dynamic capabilities which in turn impacts the performance of the firm. To measure the firm performance, two constructs have been considered which are market performance and Operational performance (Gupta et al., 2019).

The recent literature shows the importance of big data analytics on firm performance. Sivarajah et al. (2024) suggest that allocating big data analytics resources boost the firm performance, particularly the financial and operational performance. Ansari and Ghasemaghaei (2023); Khalil et al. (2023); Morimura and Sakagawa (2023); Olabode et al. (2022) tested the relationship between big data analytics capabilities and market performance while Mikalef et al. (2020) tested the relationship between big data analytics capabilities and operation performance. Big data analytics assist organisations in recognising potential market opportunities such as product development, market positioning and market share using customer and market insights (Mithas et al., 2011; Vitari & Raguseo, 2020). Olabode et al. (2022) emphasises the need to develop capabilities to analyse data and provide insights that assists in enhancing market performance. The results from Yasmin et al. (2020) shows that infrastructure resource is has highest impact on firm performance, follow by human resource and lastly the culture. Furthermore, their findings reveals that big data analytics capabilities highly impact operational performance than market performance. Therefore, the research proposed these hypotheses:

H1: Big Data Analytics Capabilities directly impacts the firm performance.

H1.1: The Tangible big data analytics capabilities positively impact the firm performance in South African financial sectors.

H1.2: The Intangible big data analytics capabilities positively impact the firm performance in South African financial sectors.

H1.3: The Human big data analytics capabilities positively impact the firm performance in South African financial sectors.

In firm competitiveness, big data predictive analysis improve the firm's marketing performance and operational performance in dynamically changing environment (Gupta et al., 2019). To enhance the firm's sustainability and competitive advantage, Teece et al. (1997) suggest that capabilities are required to be constantly reconfigured to maximise the benefits of big data analytics. Drawing on the study by Keshavarz et al. (2021), this study proposes a holistic usage of the dynamic capabilities of a firm, relative to its performance. Based on this observation, this study suggests testing not only the direct effects of big data analytics capabilities on firm performance but also the mediating effects of dynamic capabilities on the relationship between two. Thus:

H2: Big Data Analytics Capabilities positively impact the Dynamic Capabilities

H3: Big Data Analytics Capabilities positively impact the firm performance, using dynamic capabilities as a mediator.

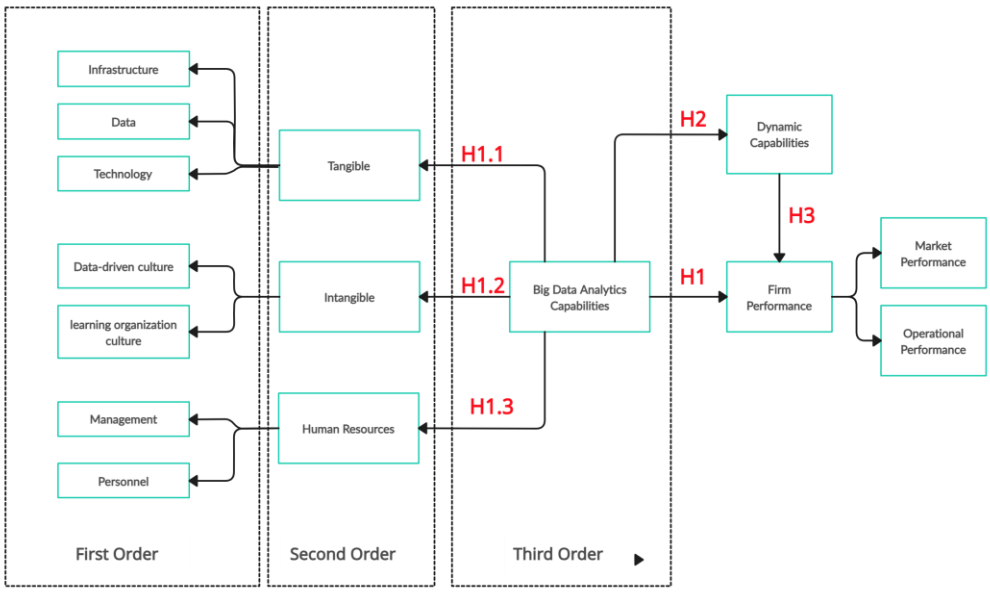

Figure 2: Conceptual framework.

Table 3 below illustrates the summary of the constructs, their role, together with the hypothesis for the conceptual framework. These constructs are later translated into measurable variable for the survey in section 3.7 and Appendix C. Furthermore, the constructs are used in section 4.7 to develop the Structural Equation Model (SEM).

Dimensions	Constructs	Role	Hypothesis
Tangible Big Data Analytics Capabilities	Infrastructure	Independent	H1.1: The Tangible big data analytics capabilities positively impact the firm performance in South African financial sectors.
	Technology	Independent	
	Data	Independent	
Intangible Big Data Analytics Capabilities	Data Driven Culture	Independent	H1.2: The Intangible big data analytics capabilities positively impact the firm performance in South African financial sectors.
	Learning Organisation Culture	Independent	
Human Resource Big Data Analytics Capabilities	Management	Independent	H1.3: The Human big data analytics capabilities positively impact the firm performance in South African financial sectors.
	Personnel	Independent	
Big Data Analytics Capabilities	Tangible Big Data Analytics Capabilities	Independent	H2: Big Data Analytics Capabilities positively impact the Dynamic Capabilities
	Intangible Big Data Analytics Capabilities	Independent	
	Human Resource Big Data Analytics Capabilities	Independent	
Dynamic Capabilities	Dynamic Capabilities	Mediator	H3: Big Data Analytics Capabilities positively impact the firm performance, using dynamic capabilities as a mediator.
Firm Performance	Market Performance	Dependent	-
	Operational Performance	Dependent	-

Table 3: Summary of variable, constructs and hypothesis

2.9 Conclusion of Literature Review

This chapter started by examining the literature review of big data, big data analytics, big data analytics capabilities, firm performance, the impact of big data analytics on firm performance and the mediating role of dynamic capabilities. The discussion included the types of big data analytics, use cases of big data analytics in financial sector and types of big data analytics capabilities. This study further discusses two theories that are significant to this study, resource-based theory and dynamic capabilities theory. Moreover, to illustrate the relationship between the variables, the conceptual model was developed.

CHAPTER 3. RESEARCH METHODOLOGY

3.1 Introduction

In this chapter, methods and techniques to gather and analyse the data will be discussed. The methodology process will include the research paradigm, research approach and research design to be undertaken. Moreover, the data collection methods, population and sample will be discussed. Furthermore, the chapter will highlight how the study will analyse and interpret the data, together with the techniques to ensure data quality. In addition, the researcher discusses the ethical considerations that the study will adhere to.

3.2 Research Paradigm

A research paradigm is described as a ‘‘set of basic beliefs (or metaphysics). . . a worldview that defines, for its holder, the nature of the ‘world’, the individual’s place in it, and the range of possible relationships to that world and its parts’’ (Guba & Lincoln, 2005) . One of the research paradigms is positivist research. It is defined as an approach that is used to verify hypothesis by applying variables and measures (Park et al., 2020). Furthermore, the positivist researcher seeks the measurable reality by distancing themselves from the phenomenon being studied (Phoenix et al., 2013). Therefore, this study adopted the positivism research paradigm to identify casual relationships by testing the hypothesis.

3.3 Research approach

Research approach is defined as “a plan that directs the researcher on how to effectively and methodically conduct research” (Flanagan, 1978). It consists of three categories, namely abductive, inductive and deductive (Hollong, 2022). A deductive approach is a top-down which moves from general to specific, theory,

hypothesis, observation and confirmation, in that order (Shdifat, 2022). Moreover, this approach uses existing theories (Jahn, 2011). The study uses the big data analytics capabilities and firm performance theories that already exist and have been tested. Therefore, this study adopted the deductive approach. The deductive approach follows the positivism and quantitative research (Flanagan, 1978). Quantitative research "is the process of collecting and analysing numerical data to explain a phenomenon" (Gupta et al., 2019). It is the best approach to test the hypothesis or theory, identify relationships between variable and evaluate the effectiveness of an intervention (Watson, 2015). With this in mind, the study employed the mono quantitative method to uncover the relationship between big data analytics capabilities and firm performance and identify the combination of capabilities that drive firm performance in financial sectors. Therefore, the research leant towards the deductive quantitative approach.

3.4 Research design

Research design is referred to as the "strategy used to address the research problem" (Hollong, 2022). Descriptive approach is used to answer the questions of what, where, when and how to the current situation (Groenewald, 2004). This approach organises and summarises the sample data collected. This research adopted the quantitative descriptive design to examine the research questions. The study adopted the survey strategy, which is a series of questions that were used to evaluate the relationships between the latent variables. Through surveys, the study seeks to gather data that will assist in testing the relationship between variables.

3.5 Data collection methods

Primary data was collected by the researcher. Primary data is described as the first-hand data that the researcher collects for the study (Sospeter, 2020). The data was collected electronically using online Qualtrics.

3.6 Population and sample

3.6.1 Population

The population refers to individuals or units that the researcher intend to conduct research in (Watson, 2015). For this study, the population included big data and analytics professionals in South Africa, who have basic understating of big data analytics in financial sector. The questionnaire was sent to the participants that meet the above requirements within the same industry, South African financial sector registered with South African Reserve Bank. The organisational size was not a criterion to this population.

3.6.2 Sample and sampling method

Sampling refers to the use of a small collection of the population to represent the larger population, instead of investigating the entire population (McCombes, 2019). The population of interest to this study was data and analytics professionals in the financial sector in South Africa. Non-probability sampling technique refers to the sampling approach where by the likelihood of individual to be selected is unknown (Park et al., 2020). Therefore, non-probability sampling method was used in this study as the number of firms and number of participants are unknown. Moreover, the researcher proposes the purposive sampling as the targeted population should meet the criteria of being within the big data space. With purposive sampling, the participants are targeted based on certain knowledge or understanding of the subject area (Watson, 2015), this will increase the relevancy of the findings.

The researcher intended to reach a sample of 300 respondents, which will be a representative of the larger population. The sample size for the unknown population was calculated using the Cochran sample size calculator below (Nanjundeswaraswamy & Divakar, 2021).

Formula for Sample Size (n) for infinite population:

$$n = \frac{Z^2.p(1-p)}{e^2}$$

where:

- n = sample size
- Z = Standard normal Z- statistic
- p = estimated proportion of the population
- e = margin of error

The study adopted the error margin (e) of 5%, therefore, the confidence level of this study should be 95%. The expected response distribution (p) was 20% and the standard normal z-statistic of 1,96 for the 95% confidence level. Therefore, for this study to be valid, a minimum of 245 participants is expected.

$$n = \frac{1.96^2.0.2(1-0.2)}{0.05^2}$$

$$n = 245$$

The researcher added 20% adjustments for non-responders, which was 49 participants, and the total is 295 participants, which is rounded off to 300 participants.

3.7 The research instrument

For this study, closed-ended questions were used for the questionnaire. This consisted of 7-point Likert questions for participants to easily answer. This scale offered more response options to increase precision. The Likert scale is “often used in a research survey to measure the attitudes, feelings, and opinions of the respondents toward a particular subject” (Parpala & Lindblom-Ylänne, 2012). The questionnaire was developed using the big data analytics constructs adopted by (Gupta & George, 2016; Wamba et al., 2017), dynamic capabilities by (Mikalef

et al., 2020) and firm performance by (Gupta & George, 2016). The first part of the questionnaire consisted of the purpose of the study (Appendix A) and a consent form (Appendix B). The questionnaire was split into six sections to answer the research questions and test hypotheses (Appendix C).

Section 1: Consists of six biographic details questions, which includes the firm size, duration of employment, age of the participant, level of qualification, gender and the type of financial sector.

Section 2: is made up of 19 questions divided into three categories of tangible capabilities infrastructure, technology, and data to help in answering the hypothesis H.1.

Section 3: is composed of 10 questions of two intangible capabilities data-driven culture and learning organisation culture to help in answering the hypothesis H1.2.

Section 4: is made up of 12 questions derived from two human capabilities management and personnel to help in answering the hypothesis H1.3.

Section 5: consists of eight questions about the dynamic capabilities to help in answering the hypothesis H2 and H3.

Section 6: is made up of eight questions of two firm performance marketing and operational performance to help in answering the hypothesis H1.

3.8 Procedure for data collection

The study gathered the primary data for this research through the survey questionnaire. A link to the questionnaire was sent via LinkedIn and email to the participants to collect the quantitative data. Moreover, the questionnaire was online through Qualtrics. Furthermore, the collected data was uploaded into excel file.

Initially, a pilot study was conducted before the full study. This process uses a smaller sample of data to test the study validity and feasibility of the measures (Anupama et al., 2023). The study used 10% of the sample (In, 2017). All the validity and adequacies were satisfactory, therefore, the researcher continued to the full study.

3.9 Data analysis strategies and interpretation

In this study, the data collected via Qualtrics was prepared through software excel and analysed using Statistical Package for Social Science (SPSS) and Analysis of Moment Structures (AMOS). The data was analysed through descriptive statistics to make data summaries and inferential analysis to determine the relationship and impact between our latent variables. Furthermore, the Covariance Based Structural Equation Model (CB-SEM) was used to test the theory and reflective measurements. Structural equation modelling (SEM) is a "multivariate, hypothesis-driven technique that is based on a structural model representing a hypothesis about the causal relations among several variables"(Stephan & Friston, 2009).

3.10 Possible study limitations and challenges

The study is limited to only data professionals in the financial sectors of South Africa. Furthermore, the study is cross sectional, it is done within a brief period of time. Therefore, longitudinal study that observe the implementation of big data analytics capabilities and its impact on firm performance over a period of 2 years would yield richer results. Moreover, the study adopted the quantitative method, therefore, the qualitative method can be used to uncover and understand human experience as suggested in section 6.8 of this report. According to Wu et al. (2022), online surveys' response rate is 44,1%. To increase the response rate of this study, a gentle reminder was sent to participants 2 weeks after the first survey questions were sent.

3.11 Quality Assurance

As this study adopted the quantitative method, to assure data quality, the study looked at external validity, internal validity, and reliability to ensure that the data collected accurately measures our variables.

3.11.1 External validity

The external validity tests how well can the same measures be applied in a different settings, e.g. population, location or country. In this study, the instruments are being applied in a different country and industry, being South African financial sector. The study used the existing validated instruments or measures to test the hypothesis (Gupta & George, 2016; Mikalef et al., 2019b; Wamba et al., 2017). The measures have been used in previous studies of the same theme (Gupta et al., 2019; Hollong, 2022; Keshavarz et al., 2021; Mikalef et al., 2020; Shdifat, 2022). To test external validity, population validity was used. The study sample reflect the characteristics of the targeted population, which are big data and analytics professionals in South Africa financial sector

3.11.2 Internal validity

The constructs of this study are measuring the hypothesis that it intends to measure. All the questions on the survey uniquely measures the latent variables. Construct validity was adopted for this study to measure the “internal buildup of an instrument and the concepts it is supposed to measure” (Ali, 2021). The study used Confirmatory Factor Analysis (CFA) analysis technique to test the internal validity of the constructs. This analysis assists in checking the correspondence between the study results and the established theories, together with the measures of the same concepts. The tests and analysis are shown in section 4.6.

3.11.3 Reliability

The study reliability is used to test whether the research can produce the same results when repeated under the same condition. The study used of the Cronbach's Alpha reliability test to ensure the stability of 70% true and allow 30% error (Hollong, 2022). The research aimed to achieve reliability by using the reflective measurement model in the questionnaire to form reflective constructs. Reflective constructs are constructs that the indicators are affected by the latent variables (Lee & Cadogan, 2013). With reflective constructs, high correlation and consistency of the results are expected. Moreover, the proposed measures have multiple constructs which reduces the measurement errors and maintain high reliability (Parpala & Lindblom-Ylänne, 2012). The study reliability was tested in section 4.5.2 of this report.

3.12 Ethical considerations

The ethical clearance was obtained from University of Witwatersrand ethic counsel prior to the data collection (Appendix D – Ethics Clearance Certificate). All the employees of financial sector consented and voluntarily participated in the study; a clear purpose of the study was highlighted on the questionnaire. Their responses and information were confidential for identity and privacy protection purposes; therefore, all our participants were anonymous. Moreover, the data was saved in a password encrypted documents that only the researcher and the supervisor were allowed to have access. The respondents were treated professionally and with honesty and respect. Furthermore, the participants were informed that they have the right to withdraw from the study at any time. In addition, no third party was allowed to grant permission or access the data collected. The collected data will be destroyed after a period of 5 years.

3.13 Conclusion

This chapter discussed the methodology used in the study. It further gave a description of the tools and techniques used to collect and analyse the data. Additionally, it explained the population and sample size, together with the ethical considerations. Furthermore, the quality assurance procedures and test were discussed.

CHAPTER 4. PRESENTATION OF RESULTS

4.1 Introduction

According to Abdullahi (2023) research is “the systematic method consisting of enunciating the problem, formulating a hypothesis, collecting the facts or data, analysing the facts and reaching certain conclusions either in the form of solution(s) towards the concerned problem or in certain generalizations for some theoretical formulation”. In this chapter, the results from the surveys are presented. Firstly, the detailed data processing steps taken are used to collect, clean and analyse the data is presented. Thereafter, the response rate and respondents’ biographical characteristics are presented. In this study, descriptive analysis is used to provide summaries of the study data, reliability analysis and correlation analysis. The chapter further evaluates the CB-SEM by using two stages. Firstly, testing the outer model fit using measurement model and secondly, testing the hypothesis relationship using the structural models.

4.2 Data Processing

Data processing explains how the data was collected and processed. The study used the online survey questionnaire to collect primary data. The questionnaire was created using Qualtrics survey software and was shared to participants using both email and LinkedIn channels to data and analytics professionals within financial sector. The data was collected from October 2024 and by November 2024, the target was reached.

The initial step taken was to export the data into Microsoft excel. To deal with missing values, the researcher cleansed the data by removing incomplete responses. Moreover, to deal with outliers, the mean and median values were calculated. Furthermore, the constructs were coded using the alphabet as shown

in Table 4. In addition, the question under each construct was coded using alpha-numeric code (e.g. I1 for question 1 of the infrastructure). The codes are used instead of the statements in SSPS and AMOS.

Furthermore, the 7-point Likert statements were also converted into numeric numbers 1- strongly disagree, 2- disagree, 3- somewhat disagree, 4- either agree or disagree, 5 - somewhat agree, 6- agree and 7- strongly agree.

Dimensions	Constructs	Code
Tangible Big Data Analytics Capabilities	Infrastructure	I
	Technology	T
	Data	D
Intangible Big Data Analytics Capabilities	Data Driven Culture	DD
	Learning Organisation Culture	LO
Human Resource Big Data Analytics Capabilities	Management	MR
	Personnel	PR
Dynamic Capabilities	Dynamic Capabilities	DYN
Firm Performance	Market Performance	MP
	Operational Performance	OP

Table 4 : Constructs coding

4.3 Response rate

The data collection of the study took approximately 13 weeks, from September to November 2024. The surveys were sent to targeted participants via email and LinkedIn messages. Reminders were sent two weeks after the first email or message was sent and the reminder included the “If you have already filled in the survey, thank you so much!” clause, for the participants who have already completed the survey. The study targeted 300 participants, however, received a total of 294 responses. From the responses, only 233 were fully completed and 61 we left incomplete. The response rate of this study was 79%. Table 5 Shows the analysis of the responses.

	Frequency	Percentage
Incomplete Responses	61	21%
Completed Responses	233	79%
Total	294	100%

Table 5: Response rate

As seen in Table 5, the 79% response rate was reached and that was satisfactory. According to Holtom et al. (2022), online surveys as a data collection medium faces low-response rate, especially those that do not include incentives. On the other hand, Wu et al. (2022) suggests that online surveys reach an average of 44% response rate. In the same line, Sataloff and Vontela (2021) state that online survey responses are between 5% and 30%, above 50% is considered good. Therefore, the response rate of this survey was excellent.

4.4 Biographical Information

This section provides an overview of the participant's biographical information to provide the background of the participants. The biographical information consists of participant's gender, level of education, type of financial sector, the size of the organisation, job title and number of years in the organisation. The table below Table 6 illustrates the results of the biographical information.

Characteristics	Frequency	Percentage
Gender		
Male	158	67,8
Female	73	31,3
Prefer not to say	2	,9
Non-binary / third gender	0	0
Level of Education		
Secondary Education	1	,4
College Education	7	3,0

Undergraduate Degree	72	30,9
Postgraduate Degree	153	65,7
Type of financial sector		
Banking	138	59,2
Insurance	32	13,7
FinTech	49	21,0
Payment Services	6	2,6
Investment Services	8	3,4
Size of the organisation		
1-19	12	5,2
20-99	8	3,4
100-199	15	6,4
200-1000	28	12,0
Above 1000	170	73,0
Job Tittle		
Chief Information Officer	2	,9
Senior Manager	36	15,5
Manager	25	10,7
Data and Analytics Specialist	159	68,2
Infrastructure Specialist	3	1,3
System and Network Administrator	8	3,4
Number of years in the organisation		
Less than a year	43	18,5
1-3 years	106	45,5
4-10 years	70	30,0
11-20 years	14	6,0
Above 20 years	0	0

Table 6: Biographic Information

Table 6 illustrates the distribution of gender as follows: Male as the highest with 67,8 % (n=158), followed by female with 31,3% (n=73) and lastly preferred not to say with 0.9% (n=2). None of the participants chose the non-binary/third gender option.

In terms of Level of Education distribution, most participants hold postgraduate Degree 65,7% (n=153). It was followed by Undergraduate Degree of 30,9% (n=72) and College Education with 3.0% (7). Lastly, only one participant with 0,4% had Secondary Education. Furthermore, the results revealed that in terms of financial sectors, majority of the participants were working in Banking with 59,2% (n=138), followed by FinTech with 21,0% (n=49), then Insurance with 13,7%(n=32). The last two types of financial sectors were Investment services with 3,4% (n=8) and Payment Services with 2.6% (n=6).

Moreover, Table 5 Shows the distribution based on the size on the organisation. 73,0% of participants (n=170) are working in a financial sector where the number of employees is above 1000, while 12.0% (n=28) of participants work at an organisation that have 200-1000 employees. The results further reveal that 6,4% (n=15) participants are from organisations of 100-199 employees, 5.2% (n=12) participants are from organisations of 1-19 employees and 3.4% (n=8) participants are from organisations of 20-99 employees.

Moreover, the results show that the distribution of participants based on job titles are Data and Analytics Specialist with 68,2 % n=(159), Senior Managers with 15.5% n=(36), Managers with 10.7% (n=25), System and Network Administrators with 3,4% (n=8), Infrastructure Specialists with 1.3% (3) and Chief Information Officer with 0.9% (n=2).

Lastly, the results revealed that most participants worked for 1-3 years with their current employer 45,5% (n=106), while 30.0% (n=70) worked for 4-10 years. This was followed by participants who worked less than a year 18,5% (n=43) and those who worked for 11-20 years 6,0% (14). None of the participants worked for more than 20 years with their current employer.

4.5 Description Analysis

Descriptive statistics is a type of quantitative data analysis that present the data in summaries that are easily understandable (Ali, 2021). Moreover, the purpose of the descriptive analysis is not to only reveals the what and, but provide answers to the how and why questions (Abdullahi, 2023). Furthermore, descriptive analysis converts observations into numerical and graphical figures to provide insights of the data collected (De Pilli et al., 2024). This section provides descriptive analysis of the collected data.

4.5.1 Study Constructs

In this section, the data made use of 7-likert scale that was coded as explained in 4.2 to present the summaries of variance and normality distribution of the constructs. The summaries are presented using the measure of central tendency (mean), dispersion measures (standard deviation) and measures of the asymmetry of distribution (skewness and kurtosis).

Central tendency of the data can be measured using the mean, median or mode to determine how the data values are spread (A. Rahman & Muktadir, 2021). The study presents the central tendency of the data using mean as it is expressible and remains highly constant as compared to other measures (Ali, 2021).

To measure the data dispersion, standard deviation measure was used. Standard deviation is described as the variation of the mean value, which is the square root of difference of the mean value from the response value (Groenewald, 2004). According to Shdifat (2022), standard deviation is not an indication of better or worse, neither wrong or right, but it describes how the mean value is distributed, however, a low value is not recommended. Additionally Collier (2020) argues that standard deviation below 0,25 shows that there was respondent misconduct in answering the question.

Kurtosis and skewness are used to test the data normalities. Kurtosis is described as the a measure to test if the data is gathered around a single value, while skewness test the direction biasness of the data (Shdifat, 2022). Kurtosis ranges between -10 and +10, and negative indicates that there are too many cases in the distribution tail while positive indicates that there are too few cases in the distribution tail (Collier, 2020). Skewness ranges between -2 and +2, and negative skew indicates that the data is leaning to the left while positive indicates that data is leaning to the right (Collier, 2020). The data variance and normality distribution are presented below.

a. ***Tangible Big Data Analytics Capabilities***

Technology

Table 7 below illustrates that technology had a minimum mean of 5,28 and maximum mean of 5,98, standard deviation ranging between 1,242 and 1,731. The skewness of data is ranging between -1,968 and -0,946, while the Kurtosis has a minimum of -0.059 and maximum of 4,583.

Measurement items	Statement	Mean	Std. Deviation	Skewness	Kurtosis
T1	Technology - We have explored or adopted parallel computing approaches (e.g., Hadoop) to big data processing	5,33	1,731	-0,942	-0,182
T2	Technology - We have explored or adopted different data visualization tools	5,98	1,242	-1,968	4,583
T3	Technology - We have explored or adopted new forms of databases such as Not Only SQL(NoSQL)	5,31	1,679	-1,105	0,331
T4	Technology - We have explored or adopted cloud-based services for processing data and performing analytics	5,91	1,317	-1,886	3,79

Table 7: Descriptive data for Technology

Infrastructure

Table 8 below illustrates that infrastructure had a minimum mean of 4,22 and maximum mean of 5,66, standard deviation ranging between 1,426 and 1,894. The skewness of data is ranging between -0,126 and -1,183, while the Kurtosis has a minimum of -0.718 and maximum of 2,169.

Measurement items	Statement	Mean	Std. Deviation	Skewness	Kurtosis
I1	Infrastructure - Compared to rivals within our industry, our organization has the foremost available analytics systems.	5,37	1,518	-1,166	0,822
I2	Infrastructure - All other (e.g., remote, branch, and mobile) offices are connected to the central office for sharing analytics insights.	5,66	1,465	-1,618	2,169
I3	Infrastructure - Our organization utilizes open systems network mechanisms to boost analytics connectivity.	5,1	1,566	-0,824	0,015
I4	Infrastructure - There are no identifiable communications bottlenecks within our organization for sharing analytics insights.	4,33	1,746	-0,286	-0,974
I5	Infrastructure - Software applications can be easily used across multiple analytics platforms.	5,37	1,598	-1,183	0,653
I6	Infrastructure - Our user interfaces provide transparent access to all platforms.	4,95	1,733	-0,624	-0,727
I7	Infrastructure - Information is shared seamlessly across our organization, regardless of the location.	5,22	1,676	-0,799	-0,472
I8	Infrastructure - Reusable software modules are widely used in new system development.	5,24	1,426	-0,989	0,784
I9	Infrastructure - End users utilize object-oriented tools to create their own applications	4,62	1,675	-0,398	-0,718
I10	Infrastructure - Analytics personnel utilize object-oriented technologies to minimize the development time for new applications.	5,01	1,555	-0,847	0,11
I11	Infrastructure - The legacy system within our organization restricts the development of new applications.	4,22	1,894	-0,129	-1,235

Table 8: Descriptive data for Infrastructure

Data

Table 9 below illustrates that Data had a minimum mean of 5,63 and maximum mean of 6,10, standard deviation ranging between 1,161 and 1,495. The skewness of data is ranging between -1,894 and -1,340, while the Kurtosis has a minimum of 1,245 and maximum of 4,298.

Measurement items	Statement	Mean	Std. Deviation	Skewness	Kurtosis
D1	Data - We have access to very large, unstructured, or fast-moving data for analysis	5,63	1,495	-1,34	1,245
D2	Data - We integrate data from multiple sources into a data warehouse for easy access	6,1	1,161	-1,894	4,298
D3	Data - We integrate external data with internal to facilitate analysis of business environment	5,79	1,297	-1,393	1,88

Table 9: Descriptive data for Data

b. *Intangible Big Data Analytics Capabilities*

Data Driven Culture

Table 10 below illustrates that Data Driven Culture had a minimum mean of 5,36 and maximum mean of 6,06, standard deviation ranging between 1,105 and 1,488. The skewness of data is ranging between -1,686 and -0,969, while the Kurtosis has a minimum of 0,348 and maximum of 3,155.

Measurement items	Statement	Mean	Std. Deviation	Skewness	Kurtosis
DD1	Data Driven Culture - We base our decisions on data rather than on instinct	6,06	1,171	-1,686	3,155
DD2	Data Driven Culture - We are willing to override our own intuition when data contradict our viewpoints	5,36	1,488	-0,969	0,348
DD3	Data Driven Culture - We continuously coach our employees to make decisions based on data	5,87	1,15	-1,4	2,193
DD4	Data Driven Culture - We continuously assess and improve the business rules in response to insights extracted from data	5,89	1,145	-1,264	1,564
DD5	Data Driven Culture - We continuously coach our employees to make decisions based on data	5,89	1,105	-1,287	1,924

Table 10: Descriptive Data for Data Driven Culture

Learning Organisation Culture

Table 11 below illustrates that Learning Organisation Culture had a minimum mean of 5,75 and maximum mean of 6,05, standard deviation ranging between 0,927 and 1,139. The skewness of data is ranging between -2,016 and -1,259, while the Kurtosis has a minimum of 2,204 and maximum of 6,623.

Measurement items	Statement	Mean	Std. Deviation	Skewness	Kurtosis
LO1	Learning Organisation Culture - We are able to search for new and relevant knowledge	5,91	1,139	-1,674	4,143
LO2	Learning Organisation Culture - We are able to acquire new and relevant knowledge	6,02	1,021	-2,019	6,623
LO3	Learning Organisation Culture - We are able to assimilate relevant knowledge	5,87	1,047	-1,583	4,325
LO4	Learning Organisation Culture - We are able to apply relevant knowledge	6,05	0,927	-1,543	4,669
LO5	Learning Organisation Culture - We have made concerted efforts for the exploitation of existing competencies and exploration of new knowledge.	5,75	1,074	-1,259	2,204

Table 11: Descriptive data for Learning Organisation

c. ***Human Resource Big Data Analytics Capabilities***

Management

Table 12 below illustrates that Management had a minimum mean of 5,51 and maximum mean of 5,80, standard deviation ranging between 1,147 and 1,294. The skewness of data is ranging between -1,328 and -0,921, while the Kurtosis has a minimum of 0,504 and maximum of 2,072.

Measurement items	Statement	Mean	Std. Deviation	Skewness	Kurtosis
MR1	Management - Our big data analytics 3s are able to work with functional 3s, suppliers, and customers to determine opportunities that big data might bring to our business	5,63	1,175	-0,921	0,551
MR2	Management - Our big data analytics 3s are able to coordinate big data-related activities in ways that support other functional 3s, suppliers, and customers	5,61	1,147	-1,247	1,654
MR3	Management - Our big data analytics 3s are able to understand and evaluate the output extracted from big data	5,8	1,129	-1,356	2,072
MR4	Management - Our BDA' 3s are able to understand where to apply big data	5,51	1,294	-0,936	0,504
MR5	Management - Our big data analytics 3s understand and appreciate the business needs of other functional 3s, suppliers, and customers.	5,72	1,201	-1,328	1,904
MR6	Management - Our big data analytics 3s are able to anticipate the future business needs of functional 3s, suppliers, and customers	5,56	1,258	-0,986	0,908

Table 12: Descriptive data for Management

Personnel

Table 13 below illustrates that Personnel had a minimum mean of 5,44 and maximum mean of 5,82, standard deviation ranging between 1,134 and 1,351. The skewness of data is ranging between -1,330 and -0,907, while the Kurtosis has a minimum of 0.383 and maximum of 1,963.

Measurement items	Statement	Mean	Std. Deviation	Skewness	Kurtosis
PS1	Personnel - Our 'big data analytics' staff has the right skills to accomplish their jobs successfully	5,8	1,203	-1,33	1,963
PS2	Personnel - Our 'big data analytics' staff is well trained	5,71	1,174	-1,069	1,342
PS3	Personnel - We provide big data analytics training to our own employees	5,44	1,351	-0,907	0,383
PS4	Personnel - Our 'big data analytics' staff has suitable education to fulfil their jobs	5,79	1,134	-1,11	1,101
PS5	Personnel - Our big data analytics staff holds suitable work experience to accomplish their jobs successfully	5,82	1,214	-1,336	1,572
PS6	Personnel - Our big data analytics staff is well trained	5,64	1,238	-1,084	1,101

Table 13: Descriptive data for Personnel

d. ***Dynamic Capabilities***

Table 14 below illustrates that Dynamic Capabilities had a minimum mean of 4,08 and maximum mean of 5,47, standard deviation ranging between 1,087 and 1,865. The skewness of data is ranging between -0.974 and -0,017, while the Kurtosis has a minimum of -0.346 and maximum of 1,399.

Measurement items	Statement	Mean	Std. Deviation	Skewness	Kurtosis
DYN1	Dynamic Capabilities - Products and services in our industry become obsolete very quickly	4,08	1,865	-0,017	-1,179
DYN2	Dynamic Capabilities - The product and services technologies in our industry change very quickly	4,83	1,688	-0,497	-0,997
DYN3	Dynamic Capabilities - We can predict what our competitors are going to do next	4,72	1,344	-0,319	-0,346
DYN4	Dynamic Capabilities - We can predict when our products/services demand changes	5,37	1,207	-0,89	1,399
DYN5	Dynamic Capabilities - Our organization frequently generates, disseminates and responds to market intelligence about customer needs	5,44	1,255	-0,901	0,689
DYN6	Dynamic Capabilities - Our organization has adequate routines to acquire, assimilate, transform and exploit existing resources to generate new knowledge	5,47	1,087	-0,964	0,972
DYN7	Dynamic Capabilities - Our organization is effective in managing dependencies among resources and tasks to synchronize activities	5,41	1,153	-0,974	0,698
DYN8	Dynamic Capabilities - Our organization effectively integrates disparate employees' inputs through heedful contribution, representation, and interrelation into our group	5,22	1,243	-0,961	0,93

Table 14: Descriptive data for Dynamic Capabilities

e. *Firm Performance*

Market Performance

Table 15 below illustrates that Market Performance had a minimum mean of 5,03 and maximum mean of 5.28, standard deviation ranging between 1,385 and 1,625. The skewness of data is ranging between -0,808 and -0.614, while the Kurtosis has a minimum of -0.484 and maximum of 0,239.

Measurement items	Statement	Mean	Std. Deviation	Skewness	Kurtosis
MP1	Market Performance - We have entered new markets more quickly than our competitors	5,22	1,438	-0,653	-0,161
MP2	Market Performance - We have introduced new products or services to the market faster than our competitors.	5,28	1,394	-0,808	0,239
MP3	Market Performance - Our success rate of new products or services has been higher than our competitors.	5,2	1,385	-0,634	-0,173
MP4	Market Performance - Our market share has exceeded that of our competitors.	5,03	1,625	-0,614	-0,484

Table 15: Descriptive data for Market Performance

Operational Performance

Table 16 below illustrates that Operational Performance had a minimum mean of 4,85 and maximum mean of 5,05, standard deviation ranging between 1,310 and 1,432. The skewness of data is ranging between -0,351 and -0,311, while the Kurtosis has a minimum of -0,535 and maximum of -0,260.

Measurement items	Statement	Mean	Std. Deviation	Skewness	Kurtosis
OP1	Operational Performance - Our productivity has exceeded that of our competitors	5,02	1,31	-0,311	-0,26
OP2	Operational Performance - Our profit rate has exceeded that of our competitors.	4,99	1,368	-0,351	-0,346
OP3	Operational Performance - Our return on investment (ROI) has exceeded that of our competitors.	4,96	1,432	-0,324	-0,524
OP4	Operational Performance - Our sales revenue has exceeded that of our competitors.	4,85	1,42	-0,315	-0,535

Table 16: Descriptive data for Operational Performance

4.5.2 Reliability study

Cronbach alpha coefficient test was used to measure the reliability of this study, which is the internal consistency between items on a scale. This reliability

instrument has been described as “one of the most important and pervasive statistics in research involving test construction and use” (Taber, 2018). Parpala and Lindblom-Ylänne (2012) state that this statistical measure assists in determining if questionnaire’s measurement items consistently measure the same characteristics. Cronbach’s alpha uses 0.00 -1.00 standard scale, where 0.7 and higher determine higher agreement and correlation between items (N. Rahman, 2023).

The study used IBM SPSS to test the internal reliability of the constructs, and all the values exceeded the threshold of 0.7, therefore, this suggests that the survey’s response values across the questions are consistent. Table 17 below illustrates the Cronbach alpha of the study.

Construct	No. of items	Alpha (α)	Comments
Tangible Big Data Analytics Capabilities			
Infrastructure	11	,819	High reliability
Technology	5	,784	High reliability
Data	3	,755	High reliability
Tangible Big Data Analytics Capabilities			
Data Driven Culture	5	,855	High reliability
Learning Organisation Culture	5	,889	High reliability
Human Resource Big Data Analytics Capabilities			
Management	5	,903	High reliability
Personnel	5	,916	High reliability
Dynamic Capabilities			
Dynamic Capabilities	8	,817	High reliability
Firm Performance			
Market Performance	4	,893	High reliability
Operational Performance	4	,916	High reliability

Table 17: Cronbach Alpha

4.6 Measurement Model Analysis

Confirmatory Factor Analysis (CFA) is a data analysis technique associated with structural equation modelling (SEM), used to test the measurement model. Confirmatory Factor Analysis is the first step performed to validate all the latent constructs in the study, before the researcher can model the inter-relationship (Elshaer et al., 2023). This statistical technique analyse the uniqueness of the constructs and verified the observed variable (Hair et al., 2021). In addition, researchers are required to run the Confirmatory Factor Analysis to confirm whether the data collected fit the hypothesised measurement model (Hox, 2021). Therefore, the study runs the Confirmatory Factor Analysis to test the outer model and analyse the correlation between the items of multiple constructs. This was done by building the model using IBM SPSS AMOS v29.

The study consists of reflective-reflective constructs and higher order model. Firstly, outer loading test were conducted to assess the reliability by examining the factor loading of each item. This is essential for checking if the consistency of the items and that items measures the same concept (Hair et al., 2020). Below are the results of the Measurement Model.

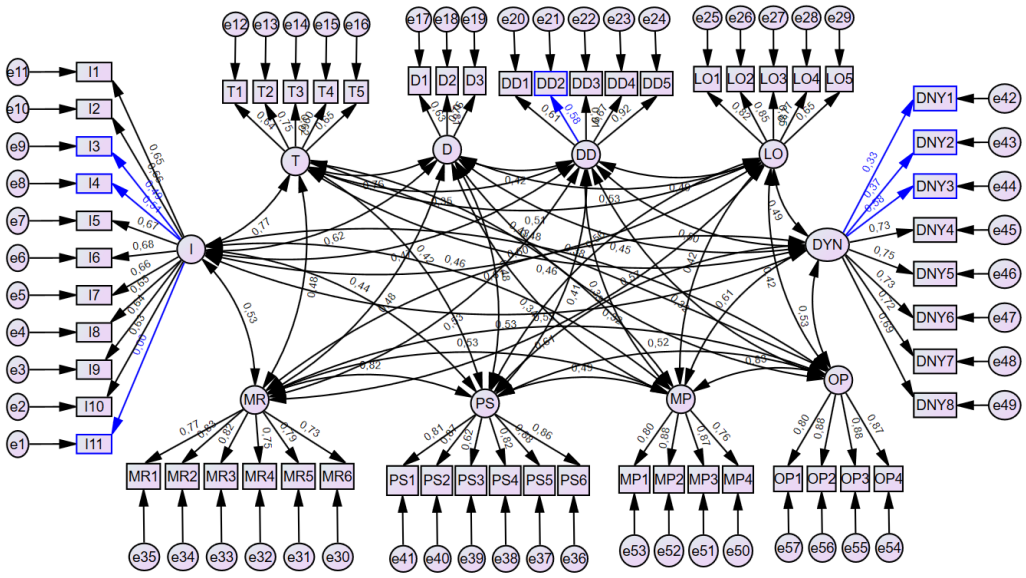

Figure 3: Initial Measurement Model

According to Sakib et al. (2022) the standardised factor loading should be above 0.6 and any items below are regarded as having a low factor loading, they should be dropped. Supported by McNeish and Wolf (2023) states that items above 0.6 confirms that the items are providing value to the unobserved variables. In Figure 3, items I3, I4, I11, DD2, DYN1, DYN2 and DYN3 had factor loadings of below **0,6** therefore, they were deleted.

Secondly, the model fit tests were conducted. There are multiple measures that are used to test the fitness of the model, in this study, the researcher uses the following statistics and fit indices.

Goodness-of-fit Chi-square (CMIN and CMIN/DF) is used test if the model fit as a whole. It measures the discrepancies between the matrices and sample (Hox, 2021). However, the study cannot only rely on goodness-of-fit Chi-square as it also depends on the sample size and number of indices which might cause discrepancies (Dash & Paul, 2021). Therefore, other fit indices are going to be considered to test the model fit.

Goodness-of-fit statistic (GFI) ranges from 0 to 1 to estimate the proportion of the variance provided by the projected covariance of the population (Sakib et al., 2022). The recommended threshold is above 0.95, however, between 0.80 and 0.95 considered good (Dash & Paul, 2021).

Adjusted goodness-of-fit statistic (AGFI) it is also measured from 0 to 1 and derived from the Goodness-of-fit statistic (GFI) (Hox, 2021). It uses the mean square instead of the sum of the square to adjust the GFI. The recommended threshold is above 0,80 (Dash & Paul, 2021).

Root mean square error of approximation (RMSEA) measures the informative fit index and recommended threshold is below 0.07 (McNeish & Wolf, 2023).

Comparative fit index (CFI) is used as an incremental index to compare the model's chi-square with the independent model, furthermore, it takes care of

smaller samples sizes (Khalil et al., 2023). The recommended threshold is above 0.90.

Tucker-Lewis Index (TLI) it is also an incremental comparative statistic measure and ranges from 0 to 1 and recommended threshold is above 0.9.

Initially, the model fit was poor. This is normal to models that uses primary data due to model being complicated or sample size (Dash & Paul, 2021). The model was improved using modification indices by joining error terms with high modification indices (Hair et al., 2020). Fig 4 below shows model after the fit.

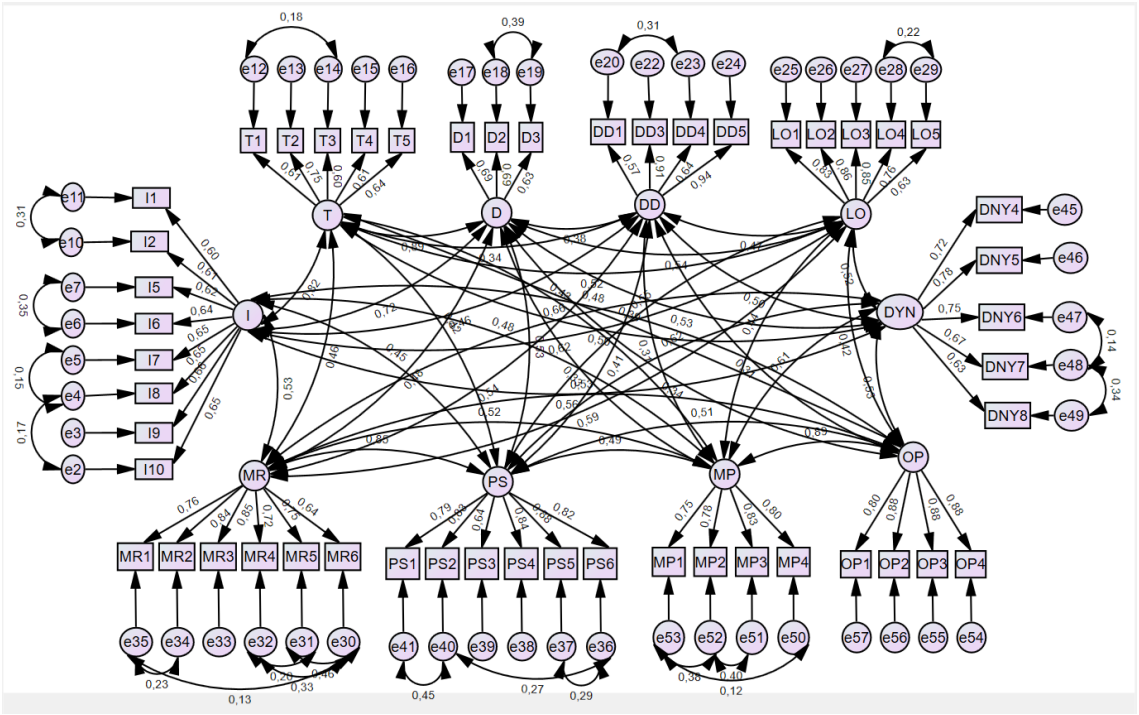

Figure 4: Improved Measurement Model

The results of the Confirmatory Factor Analysis show that the model fit indices were good with RMSEA= 0.43, CMIN = 1535.670, CMIN/DF = 1.422, TLI= 0.933, GFI= 0.809, CFI= 0.940and AGFI= 0.774. See Table 18 for results.

Category	Fit Indices	Before	After	Fitness
Parsimonious fit	CMIN/DF	1,897	1,422	Significant
Absolute Fit	CMIN	2831,851	1535,670	Significant
	RMSEA	0,062	0,43	Significant
	GFI	0,705	0,809	acceptable
Incremental Fit	CFI	0,841	0,940	Significant
	TLI	0,830	0,933	Significant
	AGFI	0,674	0,774	Not significant

Table 18: Model fit indices

In addition to Cronbach alpha, composite reliability (CR) and average variance extracted (AVE) were used to test construct reliability and convergent validity.

AVE measures the convergent validity and it indicates the amount of average of variation explained by measuring items of the latent construct due to measurement error (N. Rahman, 2023).The acceptable value for average variance extracted is >0,5 (Bhatti et al., 2022).

$$\mathrm{AVE} = \sum \lambda^2 / \mathrm{n}$$

Composite reliability measures the internal reliability and consistency of the latent constructs (N. Rahman, 2023). According to Bhatti et al. (2022), the threshold for construct reliability is >0.7, however, between 0,6 and 0,7 is also acceptable.

$$CR = (\sum \lambda)^2 / (\sum \lambda)^2 + \sum \delta 1, \quad \delta = 1 - \lambda^2$$

Table 19 below illustrates the factor loadings for outer model constructs.

Constructs	Standardised factor loading (λ)	t-value
Infrustructure (α =0,819, CR=0,63, AVE = 0,504) *(Wamba et al., 2017)*		
I1. Compared to rivals within our industry, our organization has the foremost available analytics systems.	0,653	7,908
I2. All other (e.g., remote, branch, and mobile) offices are connected to the central office for sharing analytics insights.	0,655	7,871
I5. Software applications can be easily used across multiple analytics platforms.	0,667	7,629
I6. Our user interfaces provide transparent access to all platforms.	0,684	8,54
I7. Information is shared seamlessly across our organization, regardless of the location.	0,656	8,724
I8. Reusable software modules are widely used in new system development.	0,653	9,56
I9. End users utilize object-oriented tools to create their own applications	0,641	8,375
I10. Analytics personnel utilize object-oriented technologies to minimize the development time for new applications.	0,629	***
Technology (α =0,784, CR= 0,60, AVE =0,501) *(Gupta & George, 2016)*		
T1. We have explored or adopted parallel computing approaches (e.g., Hadoop) to big data processing	0,641	***
T2. We have explored or adopted different data visualization tools	0,748	8,84
T3. We have explored or adopted new forms of databases such as Not Only SQL(NoSQL)	0,625	8,445
T4. We have explored or adopted cloud-based services for processing data and performing analytics	0,602	7,325
T5. We have explored or adopted open-source software for big data analytics	0,647	7,872
Data (α =0,755, CR=0,65, AVE =0,505) *(Gupta & George, 2016)*		
D1. We have access to very large, unstructured, or fast-moving data for analysis	0,628	***
D2. We integrate data from multiple sources into a data warehouse for easy access	0,814	8,604
D3. We integrate external data with internal to facilitate analysis of business environment	0,759	8,336
Data driven culture (α =0,855, CR=0,82, AVE=0,612) *(Gupta & George, 2016)*		
DD1. We base our decisions on data rather than on instinct	0,611	***
DD3. We continuously coach our employees to make decisions based on data	0,911	9,916
DD4. We continuously assess and improve the business rules in response to insights extracted from data	0,668	9,595
DD5. We continuously coach our employees to make decisions based on data	0,919	9,972
Learning organization Cultutre (α =0,889, CR=0,88, AVE=0,623) *(Gupta & George, 2016)*		
LO1. We are able to search for new and relevant knowledge	0,824	***
LO2. We are able to acquire new and relevant knowledge	0,854	15,924
LO3. We are able to assimilate relevant knowledge	0,846	15,314
LO4. We are able to apply relevant knowledge	0,772	13,247
LO5. We have made concerted efforts for the exploitation of existing competencies and exploration of new knowledge.	0,651	11,094
Management (α =0,903, CR=0,84, AVE=0,582) *(Gupta & George, 2016)*		
MR1. Our big data analytics managers are able to work with functional managers, suppliers, and customers to determine opportunities that big data might bring to our business	0,768	9,972
MR2. Our DBA managers are able to coordinate big data-related activities in ways that support other functional managers, suppliers, and customers	0,833	10,676
MR3. Our BDA' managers are able to understand and evaluate the output extracted from big data	0,82	10,638
MR4. Our BDA' managers are able to understand where to apple big data	0,75	11,172
MR5. Our big data analytics managers understand and appreciate the business needs of other functional managers, suppliers, and	0,793	12,859
MR6. Our big data analytics managers are able to anticipate the future business needs of functional managers, suppliers, and customers	0,726	***
Personnel (α =0,916, CR=0,88, AVE =0,644) *(Gupta & George, 2016)*		
PS1. Our 'big data analytics' staff has the right skills to accomplish their jobs successfully	0,812	14,276
PS2. Our 'big data analytics' staff is well trained	0,873	16,691
PS3. We provide big data analytics training to our own employees	0,623	10,848
PS4. Our 'big data analytics' staff has suitable education to fulfil their jobs	0,817	16,55
PS5. Our big data analytics staff holds suitable work experience to accomplish their jobs successfully	0,88	19,452
PS6. Our big data analytics staff is well trained	0,86	***
Dynamic Capabilities (α =0,817, CR=0,78, AVE=0,518) *(Mikalef et al., 2020)*		
DYN4. We can predict when our products/services demand changes (Reverse coded)	0,734	***
DYN5. Our organization frequently generates, disseminates and responds to market intelligence about customer needs	0,752	11,165
DYN6. Our organization has adequate routines to acquire, assimilate, transform and exploit existing resources to generate new knowledge	0,734	10,604
DYN7. Our organization is effective in managing dependencies among resources and tasks to synchronize activities	0,72	9,475
DYN8. Our organization effectively integrates disparate employees' inputs through heedful contribution, representation, and interrelation into our group	0,689	8,985
Market Performance (α =0,893, CR=0,79, AVE =0,6285) *(Gupta & George, 2016)*		
MP1. We have entered new markets more quickly than our competitors	0,804	12,034
MP2. We have introduced new products or services to the market faster than our competitors.	0,879	13,545
MP3. Our success rate of new products or services has been higher than our competitors.	0,867	13,039
MP4. Our market share has exceeded that of our competitors.	0,763	***
Operational perfomance (α =0,916, CR=0,85, AVE=0,737) *(Gupta & George, 2016)*		
OP1. Our productivity has exceeded that of our competitors	0,797	14,854
OP2. Our profit rate has exceeded that of our competitors.	0,876	19,13
OP3. Our return on investment (ROI) has exceeded that of our competitors.	0,884	18,901
OP4. Our sales revenue has exceeded that of our competitors.	0,875	***

Model fit Statistics: (CMIN = 1535.670, CMIN/DF = 1.422, RMSEA= 0.043, GFI= 0.809, CFI= 0.940, TLI= 0.933 and AGFI= 0.774)

*** = Items constrained for identification purposes.

α = Cronbach Alpha, **CR** = Composite Reliability, **AVE** = Average Variance Extracted

Table 19: Factor Loading

Higher order measurement model

The study estimated the third and second order constructs. The study consists of a total of 41 items. 19 representing tangible big data analytics capabilities (11- Infrastructure, 5- Technology, 3-Data), 10 representing intangible big data analytics capabilities (5- Data driven culture, 5- Learning organisation) and 12 representing Human big data analytics capabilities (6- Management, 6 Personnel). The study revealed that the loadings are significant.

Models	Latent Constructs	Dimensions	Standardised factor loading	p-value	t-value
Third Order	Big data analytics capabilities	Tangible big data analytics capabilities	0,753	P<0.001	***
		Intangible data analytics capabilities	0,973	P<0.001	***
		Human big data analytics capabilities	0,830	P<0.001	***
Second Order	Tangible big data analytics capabilities	Infrastructure	0,878	P<0.001	8,383
		Technology	0,930	P<0.001	8,069
		Data	0,903	P<0.001	***
	Intangible data analytics capabilities	Data driven culture	0,615	P<0.001	6,440
		Learning Organisation	0,755	P<0.001	***
	Human big data analytics capabilities	Management	0,973	P<0.001	9,271
		Personnel	0,872	P<0.001	***

*** = Items constrained for identification purposes.

Table 20: Higher order constructs

4.7 Structural Equation Model (SEM)

After the measurement model was developed and CFA was conducted successfully by the model passing the fit indices threshold, the next step was to develop the structural equation model to represent the relationship between the latent variables and observed variables. The process aimed at showing and testing the relationships in a hypothesised model. In addition, Structural Equation Model (SEM) is being used to validate and link the data collected to the developed

conceptual framework (Dash & Paul, 2021). This is done by evaluating the path coefficient between the endogenous (dependent) variables and exogenous (independent) variables.

Furthermore, the error terms were added on dependant variables to calculate the standard errors. The reflective measures are not perfect, therefore, error terms are added to cater for other factors that may impact/explain the variable that had not been included in the study (Hair et al., 2021).

The study adopted three models to test hypotheses. Model 1- base model (figure 5), model 2- direct relationship of Capabilities (figure 6) and model 3- including dynamic capabilities as a mediator (figure 7).

4.7.1 Hypothesis testing

The model of this study had three (H1, H2 and H3) main hypotheses and three sub-hypotheses under H1. The study used CB-SEM approach in SSPS AMOS to evaluate theoretically established relationships (Akter et al., 2016). Additionally, the study used the factor loading to determine the strength of the relationships. Factor loading ranges from -1 to 1, 0 to 1 indicates a positive relationship where the closer it gets to 1 indicates the perfect correlation and below 0 to -1 indicates the negative correlation (Collier, 2020). Moreover, squared multiple correlation is used to assess the effectiveness of the relationship. Lastly, p-value is used to indicate the significance of the hypothesis being tested (Hair et al., 2021). If the p-value <0,05 then the hypothesis is significant, else, reject the null hypothesis. Furthermore, the study used the bootstrapping approach to test the mediation effect hypothesis.

H1: Big Data Analytics Capabilities positively impacts the firm performance.

Hypothesis 1 has the main hypothesis that tested the relationship between big data analytics capabilities as a whole and firm performance. Moreover, it has

three sub-hypotheses to test the direct relationship between the categories of big data analytics capabilities and firm performance.

H1: Big Data Analytics Capabilities directly impacts the firm performance.

H1.1: The Tangible big data analytics capabilities positively impact the firm performance in South African financial sectors.

H1.2: The Intangible big data analytics capabilities positively impact the firm performance in South African financial sectors.

H1.3: The Human big data analytics capabilities positively impact the firm performance in South African financial sectors.

To test the hypothesis relation between big data analytics capabilities and firm performance, the factor loadings were ran as shown is figure 5.

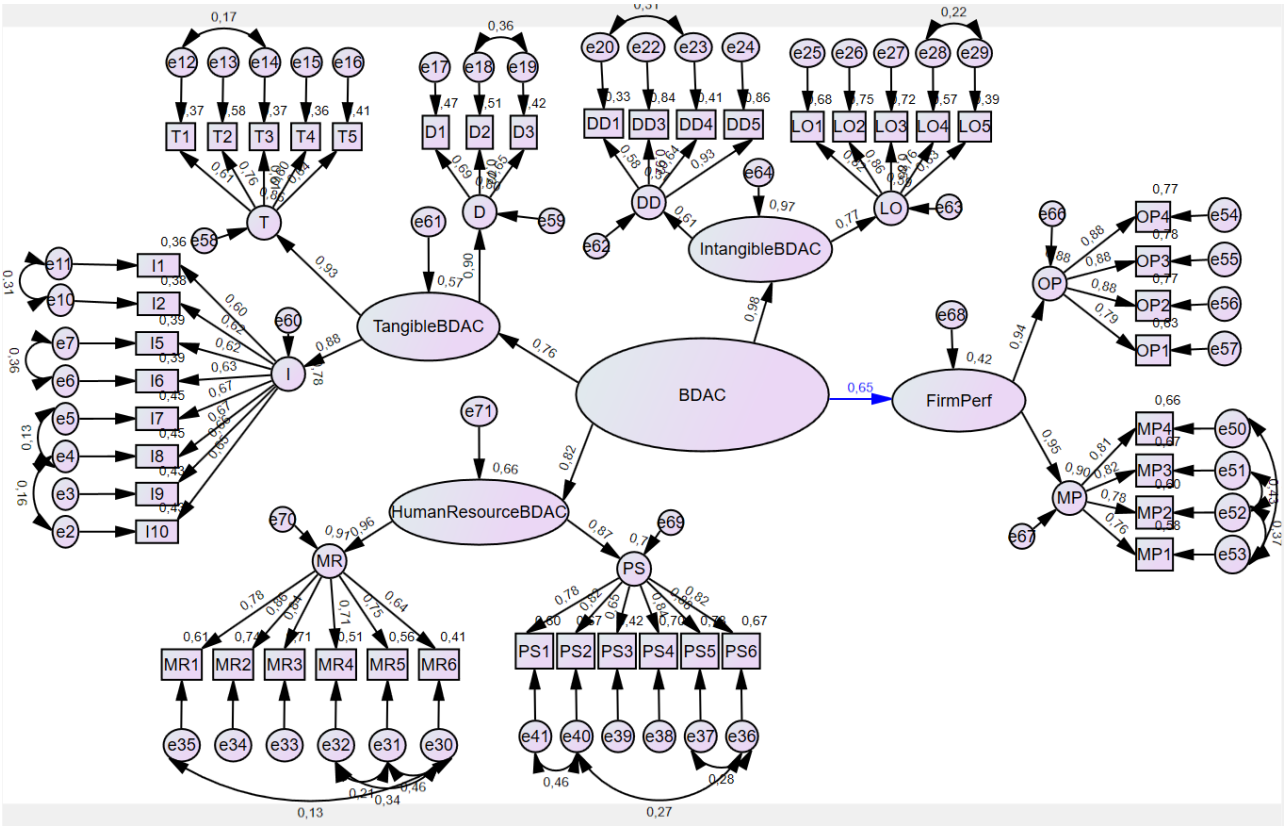

Figure 5: H1 SEM Model

The results displayed in Table 21 reveal that there is a positive and significant direct relationship between big data analytics capabilities and firm performance, with a correlation of 0.65, r^2=0.419 and p<0.001.

Hypothesis	Constructs Path	Standardised factor loading (λ)	t-value	P-value	Status
H1	Big Data Analytics Capabilities → Firm Performance	0,65	8,088	***	Supported
Squired Multiple Correlation (R^2)					
Firm Performance		0,419			
Model fit Statistics: (CMIN = 1544.337, CMIN/DF = 1.686, RMSEA= 0.054, GFI= 0.801, CFI= 0.911, TLI= 0.904 and AGFI= 0.751)					

Table 21: H1 results

For the three sub-hypothesis in H1, The SEM model in Figure 6 below was used.

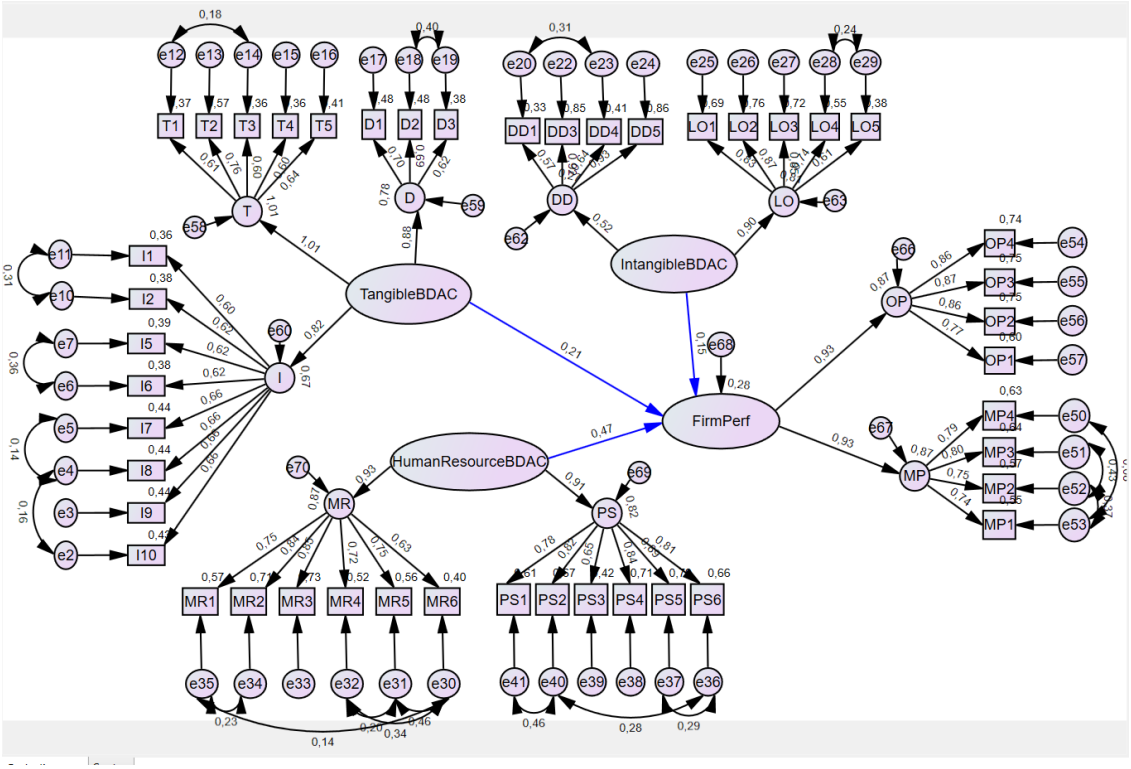

Figure 6: H1.1, H1.2 and H1.3 SEM Model

The results for the H1 sub-hypothesis are shown below in Table 22

Hypothesis	Constructs Path	Standardised factor loading (λ)	t-value	P-value	Status
H1.1	Tangible Big Data Analytics Capabilities → Firm Performance	0,207	2,903	0,004	Supported
H1.2	Intangible Big Data Analytics Capabilities → Firm Performance	0,151	1,204	0,229	Not Supported
H1.3	Human Big Data Analytics Capabilities → Firm Performance	0,466	5,772	***	Supported
Squired Multiple Correlation (R^2)					
Firm Performance		0,385			
Model fit Statistics: (CMIN = 1544.337, CMIN/DF = 1.686, RMSEA= 0.054, GFI= 0.801, CFI= 0.911, TLI= 0.904 and AGFI= 0.751)					

Table 22: H1 Sub-hypothesis results

H1.1 tested whether there is a relationship between tangible big data analytics capabilities and firm performance. The results revealed that there is a positive correlation of 0,207 between the tangible big data analytics capabilities and firm performance with p=0.004. This implies that there is a significant relationship between tangible big data analytics capabilities and firm performance in South African financial sector.

H1.2 assessed the relationship between intangible big data analytics capabilities and firm performance. The results revealed that there is a positive relation between intangible big data analytics capabilities and firm performance, with a correlation of 0,151, however, the relationship is not significant (p=0.229). This implies that intangible big data analytics capabilities moderately impact firm performance.

H1.3 tested whether human big data analytics capabilities positively impact the firm performance. The results revealed that there is a correlation of 0.466 and p<0.001 to support that big data analytics capabilities positively impact the firm performance. This implies that amongst the three big data analytics capabilities,

the human big data analytics capabilities have the most significant impact on the firm performance.

H2. Big Data Analytics Capabilities positively impact the Dynamic Capabilities

H2 tested the relationship between big data analytics capabilities and dynamic capabilities.

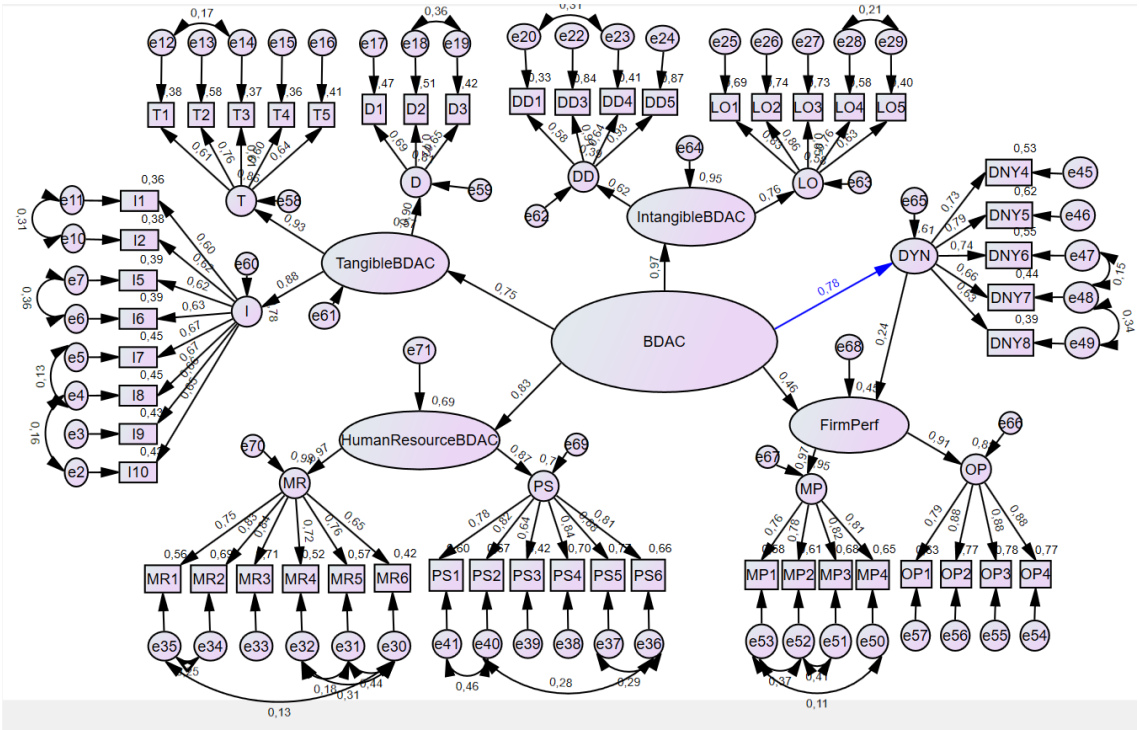

Figure 7: H2 SEM Model

The results in Table 23 revealed that there is a positive and significant relationship between big data analytics capabilities and dynamic capabilities with correlation of 0.784, r^2=0.614 and p<0.001.

Hypothesis	Constructs Path	Standardised factor loading (λ)	t-value	p-value	Status
H2	Tangible Big Data Analytics Capabilities → Dynamic Capabilities	0,784	8,875	***	Supported
Squired Multiple Correlation (R^2)					
Dynamic Capabilities		0,614			
Model fit Statistics: (CMIN = 1544.337, CMIN/DF = 1.686, RMSEA= 0.054, GFI= 0.801, CFI= 0.911, TLI= 0.904 and AGFI= 0.751)					

Table 23: H2 Results

H3: Big Data Analytics Capabilities positively impact the firm performance, using dynamic capabilities as a mediator.

H1 revealed that big data analytics capabilities positively impact firm performance, thus, H1 supported. The study used H3 as an alternative hypothesis, to test the impact of big data analytics capabilities on firm performance, through dynamic capabilities. The mediation effect was tested using the bootstrapping procedure to estimate indirect impact, with 95% confidence level.

H3 used the model in figure 8 below to test the mediation relationship.

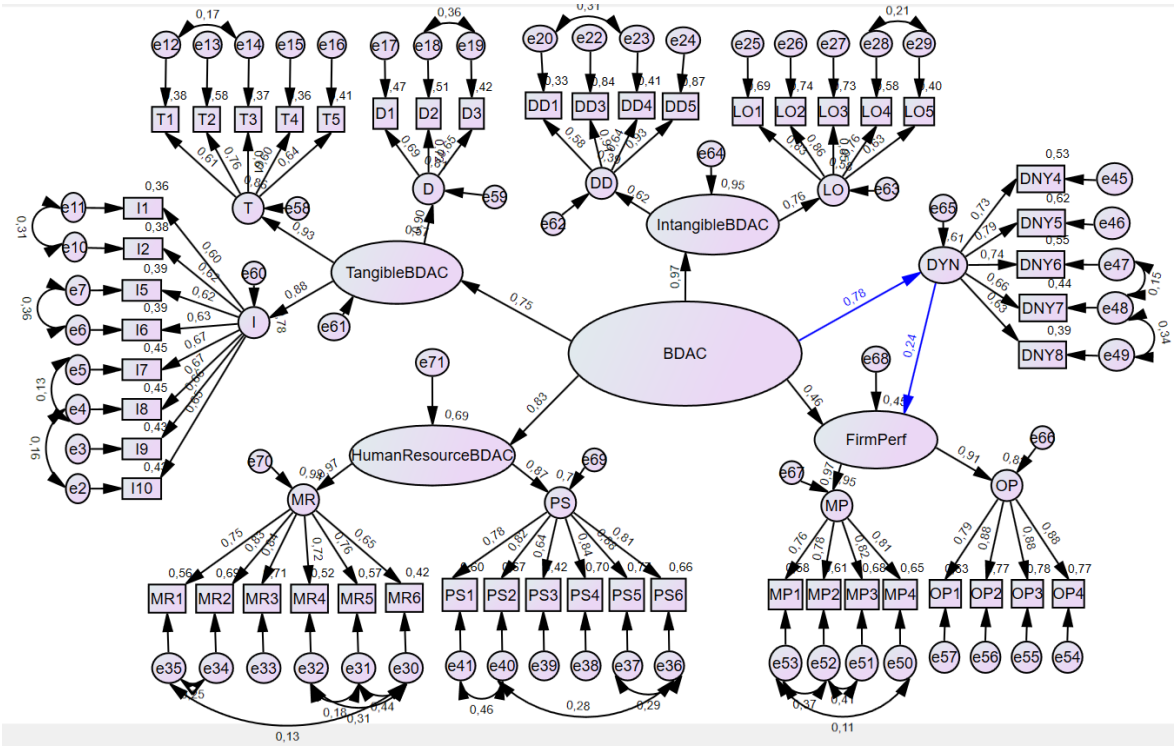

Figure 8: H3 SEM Model

Although there is a positive factor loading, the mediation path big data analytics capabilities → dynamic capabilities → firm performance is not significant (p>0.05). The results in Table 24 revealed no mediation.

Hypothesis	Constructs Path	Direct Effect	Indirect Effect	Confidence (Low)	Interval (High)	p-value	Conclusion
H3	Tangible Big Data Analytics Capabilities → Dynamic Capabilities→ Firm Performance	0,02	0,19	-0,058	0,486	0,110	No Mediation

Table 24: H3 results

The Table 25 below illustrates the summary of the hypothesis.

Hypothesis	Description	Supported/Rejected
H1	The big data analytics capabilities positively impact the firm performance in South African financial sectors.	Supported
H1.1	The Tangible big data analytics capabilities positively impact the firm performance in South African financial sectors.	Supported
H1.2	The Intangible big data analytics capabilities positively impact the firm performance in South African financial sectors.	Rejected
H1.3	The Human big data analytics capabilities positively impact the firm performance in South African financial sectors.	Supported
H2	Big Data Analytics Capabilities positively impact the Dynamic Capabilities	Supported
H3	Big Data Analytics Capabilities positively impact the firm performance, using dynamic capabilities as a mediator.	No Mediation

Table 25: Summary of Hypothesis Test Results

4.8 Conclusion

This chapter presented the main results of the study survey responses from participants. The survey reached a total of 294 responses and only 233 were completed fully. The chapter began with presenting the features of the collected data by providing the frequency and percentage of the biographical information. Thereafter, the descriptive analysis was conducted. The descriptive analysis included the measure of central tendency (mean), measures of dispersion (standard deviation) and distribution normalities (skewness and kurtosis) of the study construct. Furthermore, study reliability and validity were assessed. Through measurement and structural model, the research hypothesis was tested and the results showed the positive relationship between constructs. The chapter to come will present the discussion of the results.

CHAPTER 5. DISCUSSION OF THE RESULTS

5.1 Introduction

In this chapter, a discussion of the results of each hypothesis will be presented. The purpose of the research was to determine the impact of Big Data Analytics Capabilities on the performance of the Financial Sectors in South Africa, with a mediator of dynamic capabilities. The chapter will discuss the findings of the below hypothesis, in comparison with findings of other similar studies and reports.

5.2 H1: Big Data Analytics Capabilities positively impacts the firm performance

Several researchers examined the relationship between big data analytics capabilities and firm performance (Akter et al., 2016; Ansari & Ghasemaghaei, 2023; Graham & McCloskey, 2021; Hollong, 2022; Mikalef et al., 2019a; Shdifat, 2022). The findings have proven a positive relationship between big data analytics capabilities and firm performance. However, fewer studies have focused on testing the relationship within South Africa (Hollong, 2022) and none of the studies focused on South African financial sector . Thus, this study attempted to fill that gap.

The study assumed that big data Analytics capabilities positively impacts the firm performance in the South African financial sectors. The findings of the study supported the hypothesis by revealing a significant relationship of 0.65 correlation ($p<0.001$) between big data analytics capabilities and firm performance. Therefore, big data analytics capabilities have a potential of maximising the firm performance of South African financial sectors.

The tangible, intangible and human resource capabilities complement each other to successfully improve firm performance, the firm cannot rely on just one

capability (Mikalef et al., 2020). In addition, organisations need to use a combination of different capabilities to achieve positive results (Sabharwal & Miah, 2021). For example, large datasets with no talent and technologies to transform it becomes invaluable (Gupta & George, 2016). Even with that, without the learning and data-driven culture, decisions become biased (Graham & McCloskey, 2021).

Organisations have invested in big data analytics to improve firm performance. This study have proven that the investment in financial sectors bring value. These findings are aligned with the study conducted by Aziz et al. (2023) that revealed a positive relationship between big data analytics capabilities and firm performance. In addition, other studies have confirmed this positive relationship (Bhatti et al., 2022; Chong et al., 2023; Graham & McCloskey, 2021; Wamba et al., 2017).

> H1.1: The Tangible big data analytics capabilities positively impact the firm performance in South African financial sectors.

The tangible capabilities consist of three sub-dimensions, namely, infrastructure, technology, and data. From the descriptive statistics, the mean values result of each sub-dimensions reveals that most respondents agreed with the questions Infrastructure - 5,00, Data-5,84 and Technology 5,64. Furthermore, the correlation between the dimension and subdimensions were positive and significant ($p<0.001$). Moreover, the correction between tangible data analytics capabilities and firm performance was positive and significant ($p<0.005$). Amongst the three subdimensions, technology had the highest effect ($\lambda=0.93$), followed by data($\lambda=0.93$) and lastly infrastructure ($\lambda=0,88$).

To maximise performance in South African financial sectors, organisations can deploy the tangible big data analytics. In line with this, Cheng et al. (2023) emphasised the need to develop tangible resources to assist in data processing and storage. Each sub dimensions are important, for example Côrte-Real et al. (2020) states that good quality data is an important resource for decision making,

while (Sahoo et al., 2023) states that infrastructure provides the capability to handle large data and a foundation for big data analytics. In Addition, technology is a vital tool for advanced analytics (Awan et al., 2021).

Over the years, financial sectors have introduced new services such as fintech and financial data and markets infrastructure (FDMI) to assist in shaping the IT infrastructure, technology and data. According to McKinsey & Company (2025), the financial data and markets infrastructure has become an important industry in the financial value chain as it modernise, digitalise and innovate financial operations. Moreover, FinTech transformed how finance functions work, making it an essential part of the finance industry (Sutton, 2023). These services play a critical role by operating at the intersection of finance and technology across the financial services ecosystem.

> H1.2: The Intangible big data analytics capabilities positively impact the firm performance in South African financial sectors.

The intangible capabilities consist of two sub-dimensions, namely, learning organisation and data driven culture. From the descriptive statistics, the mean values result of each sub-dimensions reveals that most respondents agreed with the questions data driven culture (5,81) and learning organisation (5,9). Furthermore, the correlation between the dimension and subdimensions were positive and significant ($p<0.001$). However, the correction between intangible data analytics capabilities and firm performance was not significant ($p>0.005$). Amongst the two subdimensions, learning organisation had the highest effect ($\lambda=0.76$), followed by data driven culture ($\lambda=0.62$).

Although each subdimension have shown its significance to the dimension, intangible big data capabilities as a whole does not have a significant relationship with firm performance in South African financial sector.

Findings by Moyikwa (2024) states that some of the challenges in South African banks are siloed organisational structures that affect the collaboration and data sharing, this have an impact on learning organisation and data driven culture. In

line with this, Dmytro (2024) states that data silos are the biggest barrier to innovation and hinder digital transformation efforts for 81% of organizations. Therefore,

> H1.3: The Human big data analytics capabilities positively impact the firm performance in South African financial sectors.

The human capabilities consist of two sub-dimensions, namely, management and personnel. From the descriptive statistics, the mean values result of each sub-dimensions reveals that most respondents agreed with the questions management (5,64) and personnel (5,7). Furthermore, the correlation between the dimension and subdimensions were positive and significant ($p<0.001$). Moreover, the correction between human big data analytics capabilities and firm performance was positive and significant ($p<0.001$). Amongst the two subdimensions, management had the highest effect ($\lambda=0.97$), followed by data personnel ($\lambda=0.87$).

The combination of a good big data analytics human resource and managerial resource creates a valuable and rare firm attributes, these constructs are complicated in nature as they influence process and decision-making (Aydiner et al., 2019). Cetindamar et al. (2020) states that big data is one of the scarce and demanded skills in Information Technology profession. Moreover, Iftikhar et al. (2021) argues that the ability to analyse data is driven by human knowledge and experience, therefore, knowledge within the organisation should be natured. In addition, Iftikhar et al. (2021) argues that firm's key resource is management's ability to make decisions through big data analytics. The human big data analytics capability cannot be neglected in big data analytics.

5.3 H2. Big Data Analytics Capabilities positively impact the Dynamic Capabilities

This study examined the dynamic capabilities as a whole concept, rather than dissecting it onto its steps sensing, seizing and transformation. In addition, the

research tested the ability of the firm's sustainability against competitors through big data analytics capabilities.

The research revealed that big data analytics capabilities positively and significantly impact the dynamic capabilities (λ=0.784, $p<0.001$), in support of the study hypothesis. The findings are aligned with Mikalef et al. (2020) that stated that big data analytics capabilities is an enabler of dynamic capabilities.

Previous researches have provided evidence of the significant relationship between big data analytics capabilities positively and dynamic capabilities (Wamba et al., 2017; Wilden et al., 2013; Yoshikuni et al., 2023). According to Linde et al. (2021), big data analytics capabilities enable companies to sense, seize and reconfigure new opportunities dynamically.

It is noted that big data analytics capabilities can enable dynamic capabilities. Therefore, acquisition and investment in the capabilities have the potential to manage change in a competitive environment.

5.4 H3: Big Data Analytics Capabilities positively impact the firm performance, using dynamic capabilities as a mediator.

To test the impact of big data analytics capabilities on firm performance, mediated by dynamic capabilities, the study adopted the bootstrapping approach. The research proposed a potential positive effect of dynamic capabilities of big data analytics capabilities on firm performance.

As revealed by the results, the total estimates between big data analytics capabilities and firm performance, mediated by dynamic capabilities is not significant ($p=0,11$), therefore $p>0,05$, rejecting H3. The findings differs from previous studies that found that dynamic capabilities can be developed to improve firm performance (Cao et al., 2022). The findings from this study refute existing literature that suggests that dynamic capabilities either partially or fully mediate the relationship between big data capabilities and firm performance

(Wamba et al., 2017) and big data analytics capabilities and innovation (Bhatti et al., 2022; Mikalef et al., 2019b).

The findings support Wilden et al. (2013) that argues that although dynamic capabilities is necessary, it is not sufficient enough to promote superior firm performance. Furthermore, Mikalef et al. (2019) found no significant mediation of dynamic capabilities between big data analytics and operational performance.

5.5 Conclusion

In this chapter, the discussions stemming from the findings and literature on big data analytics capabilities, firm performance and dynamic capabilities were presented. The chapter described the findings and context in relation to the existing knowledge. Furthermore, the chapter made arguments of the unexpected findings that improves scientific knowledge. These discussions were based on the hypothesis formulated, bringing the relevancy of this study.

CHAPTER 6. CONCLUSIONS & RECOMMENDATIONS

6.1 Introduction

This chapter presents summaries of the study objectives and findings. Moreover, it presents the study contributions and recommendations in relation with big data analytics capabilities. Furthermore, suggestions for future research is provided.

6.2 Conclusions regarding big data analytics capabilities' positive impact on the firm performance

Like many sectors, financial sector has followed the hype of investing and implementing big data and big data analytics technologies. The study has explored whether the investment results in business value. Furthermore, the study developed third order (hierarchical) model consisting of three dimensions; intangible, tangible and human resource capabilities to capture big data analytics capabilities.

The study suggests that big data analytics capabilities is one of the key enablers of firm performance in South African financial sector. Moreover, findings reveals that improving big data analytics capabilities result in performance improvement. Furthermore, the dimensions and sub-dimensions of the capabilities, as resources, can also be linked with stronger competitive advantage and maximum firm performance. Moreover, the study suggests that organisations should not only focus on big data but develop capabilities that will assists in fully benefiting from the big data.

The study has shown that individual capabilities are not stronger than the combined capabilities. Therefore, firms need to invest and acquire all big data analytics capabilities as resources, to complement each other. The joined capabilities help in developing the big data analytics as a whole, although human

big data capabilities have shown the highest effect. In conclusion, financial sectors with better big data analytics capabilities as resources, have the ability to perform better and sustain competitive advantage.

6.3 Conclusions regarding big data analytics capabilities' positive impact on the Dynamic Capabilities

Organisations require dynamic capabilities in order to continue performing under uncertain and unstable environments. The findings reveal that big data analytics capabilities lead to an increase in dynamic capabilities. Therefore, firms should strengthen their big data analytics capabilities to achieve sustained competitive advantage.

Firms in possession of big data analytics capabilities are able to adapt and respond to rapidly changing environment. Moreover, firms are at an upper hand for long-term competitive advantage.

6.4 Conclusions regarding big data analytics capabilities' positive impact on the firm performance, using dynamic capabilities as a mediator

Previous studies have contributed to the big data analytics capabilities and firm performance relationship using resource-based view theory. This study extended the theory by drawing upon dynamic capabilities theory to emphasise the need to recreate and renew strategic capabilities to stay in a competitive position.

Contrary to the assumptions, the findings of this indirect relationship between big data analytics capabilities and firm performance revealed that there is no significant mediation between the big data analytics capabilities and firm performance. Therefore, firm performance is not influenced by dynamic capabilities in South African financial sector.

6.5 Theoretical Contributions

Previous studies have contributed to the big data analytics capabilities and firm performance relationship using resource-based view theory. This study extended the theory by drawing upon dynamic capabilities theory to emphasise the need to recreate and renew strategic capabilities to stay in a competitive position.

The research contributed to the big data analytics capabilities body of knowledge, literature and its impact to the performance. This is the first study to explore the relationship between big data analytics capabilities and firm performance within financial sectors in South Africa. Moreover, the study extends the big data analytics research by proving the foundation to link big data analytics capabilities with firm performance, mediated by dynamic capabilities.

6.6 Practical Contribution

The study revealed that apart from the overall big data analytics capabilities, both tangible and human big data analytics capabilities positively and significantly affect the firm performance. Following these findings, the study attempt to assist financial sector in understanding which capabilities should be acquired to get the full benefits of big data analytics. These financial sectors includes banks, fintech, insurance, investment and payment services.

Organisation should develop its overall big data analytics capabilities to improve its operational and market performance. These includes fostering the quality data collection, IT infrastructure to manage the collected data and the technology to better integrate data sources and effectively analyse it. Moreover, organisations should develop its human resources to bridge the gap of skillset in big data.

6.7 Recommendations

This study focused on the relationship between big data analytics capabilities and firm performance. This area of focus has been under-researched, and the aim of this study was to bridge the gap. The study drew from resource-based theory and dynamic capabilities theory and argued that big data analytics capabilities positively impact the firm performance in South African financial sectors.

Our findings provide support to the resource-based theory that firms have the ability to outperform others due to the strategic resources it possesses. Moreover, the findings provide support to dynamic capabilities theory that the firm's ability adapt and respond to rapidly changing environment may maximise performance.

From the findings of this study, it is recommended that South African financial sectors leverage on big data analytics capabilities, especially tangible and human resources to improve performance. In addition, the study recommends financial sectors to develop and take care of the infrastructure, data and technology resources as its tangible resources. Moreover, it is recommended that financial sectors develop management and personnel capabilities as the organisation's human resources.

It is further recommended that financial sectors improve their intangible resources such as data driven culture and learning organisation, to benefit from the overall big data analytics capabilities. Lastly, it is beneficial to invest big data analytics capabilities, as it has shown a positive impact to both the firm performance and dynamic capabilities.

6.8 Suggestions for further research

Findings from this study provides useful foundation for future research that examines the relationship between big data analytics capabilities and firm performance. Below are the suggestions for future research.

Firstly, future studies can employ qualitative method approach to uncover the combination of factors and resources that can drive performance from big data analytics. These can be uncovered through interviews with key stakeholders that works with and/or are beneficial of big data analytics. Furthermore, it is important to acknowledge and understand in each sector how big data analytics capabilities impact firm performance; therefore, the research can be conducted in other sectors in South Africa.

In addition, future studies could assess the direct relationship between big data analytics capabilities and market performance & operational performance to provide concrete evidence of both internal and external firm performance. Moreover, future studies can explore more moderators such as innovation, digital transformation and strategic agility.

REFERENCES

Abdullahi, J. A.-L. (2023). The trends and prospects of statistical packages for the social science (SPSS) as a tool for data analysis in architectural research. *HAFED POLY Journal of Science, Management and Technology*, *5*(1), Article 1. https://www.ajol.info/index.php/hpjsmt/article/view/245234

Abdullahi, S., Nazir Yusuf, Musa Ahmed Zayyad, Lawal Idris Bagiwa, Abubakar Zakari, Alhassan Adamu, Amina Nura, & Saadana Shehu. (2020). The Big Data Technology: Assessing the Impact in the Banking Industry. *Open Journal of Science and Technology*, *3*(2), 71–77. https://doi.org/10.31580/ojst.v3i2.1464

Akter, S., Wamba, S. F., Gunasekaran, A., Dubey, R., & Childe, S. J. (2016). How to improve firm performance using big data analytics capability and business strategy alignment? *International Journal of Production Economics*, *182*, 113–131. https://doi.org/10.1016/j.ijpe.2016.08.018

Ali, A. (2021). *Quantitative Data Analysis*. https://doi.org/10.13140/RG.2.2.23322.36807

Alsolbi, I. N. (2023). *Leveraging Potentials of Big Data for Better Decision-Making and Value Creation in Nonprofit Organisations* [Thesis]. https://opus.lib.uts.edu.au/handle/10453/172435

Al-Surmi, A., Bashiri, M., & Koliousis, I. (2022). AI based decision making: Combining strategies to improve operational performance. *International Journal of Production Research*, *60*(14), 4464–4486. https://doi.org/10.1080/00207543.2021.1966540

Alyahya, M., Aliedan, M., Agag, G., & Abdelmoety, Z. (2023). Understanding the Relationship between Big Data Analytics Capabilities and Sustainable

Performance: The Role of Strategic Agility and Firm Creativity. *Sustainability*, *15*(9), 7623. https://doi.org/10.3390/su15097623

Alzboun, N. M. (2023). Big data analytics capabilities and supply chain sustainability: Evidence from the hospitality industry. *Uncertain Supply Chain Management*, *11*(4), 1427–1432. https://doi.org/10.5267/j.uscm.2023.8.004

Amer, A., & Shoukry, H. (2023). From Data to Decisions: Exploring the Influence of Big Data in Transforming the Banking Industry. *Fernando Martins De Bulhão (FMDB) Publishing Company.*, *1*(3), 147–156.

Ansari, K., & Ghasemaghaei, M. (2023). Big Data Analytics Capability and Firm Performance: Meta-Analysis. *Journal of Computer Information Systems*, *63*(6), 1477–1494. https://doi.org/10.1080/08874417.2023.2170300

Anupama, k, Chaudhary, P., & Lakshmi, T. (2023). Introduction of a Pilot Study. *INTERNATIONAL JOURNAL OF ETHICS, TRAUMA & VICTIMOLOGY*, *9*(02), Article 02. https://doi.org/10.18099/ijetv.v9i02.07

Arunachalam, D., Kumar, N., & Kawalek, J. P. (2018). Understanding big data analytics capabilities in supply chain management: Unravelling the issues, challenges and implications for practice. *Transportation Research Part E: Logistics and Transportation Review*, *114*, 416–436.

Awan, U., Shamim, S., Khan, Z., Zia, N. U., Shariq, S. M., & Khan, M. N. (2021). Big data analytics capability and decision-making: The role of data-driven insight on circular economy performance. *Technological Forecasting and Social Change*, *168*, 120766. https://doi.org/10.1016/j.techfore.2021.120766

Aydiner, A. S., Tatoglu, E., Bayraktar, E., & Zaim, S. (2019). Information system capabilities and firm performance: Opening the black box through decision-making performance and business-process performance.

International Journal of Information Management, *47*, 168–182. https://doi.org/10.1016/j.ijinfomgt.2018.12.015

Aziz, N. A., Long, F., & Wan Hussain, W. M. H. (2023). Examining the Effects of Big Data Analytics Capabilities on Firm Performance in the Malaysian Banking Sector. *International Journal of Financial Studies*, *11*(1), 23. https://doi.org/10.3390/ijfs11010023

Bag, S., Pretorius, J. H. C., Gupta, S., & Dwivedi, Y. K. (2021). Role of institutional pressures and resources in the adoption of big data analytics powered artificial intelligence, sustainable manufacturing practices and circular economy capabilities. *Technological Forecasting and Social Change*, *163*, 120420. https://doi.org/10.1016/j.techfore.2020.120420

Barney, J. (1991). Firm Resources and Sustained Competitive Advantage. *Journal of Management*, *17*, 3–10. https://doi.org/10.1016/S0742-3322(00)17018-4

Barney, J. B. (1996). The Resource-Based Theory of the Firm. *Organization Science*, *7*(5), 469–469.

Basile, L. J., Carbonara, N., Panniello, U., & Pellegrino, R. (2024). How Can Technological Resources Improve the Quality of Healthcare Service? The Enabling Role of Big Data Analytics Capabilities. *IEEE Transactions on Engineering Management*, *71*, 5771–5781. IEEE Transactions on Engineering Management. https://doi.org/10.1109/TEM.2024.3366313

Bayat, A., & Mungai, I. (2018, December). *The Impact of Big Data on the South African Banking Industry*. 15th International Conference on Intellectual Capital, Knowledge Management and Organisational Learning. https://www.researchgate.net/publication/329468191_The_Impact_of_Big_Data_on_the_South_African_Banking_Industry

Bhandari, K. R., Rana, S., Paul, J., & Salo, J. (2020). Relative exploration and firm performance: Why resource-theory alone is not sufficient? *Journal of Business Research*, *118*, 363–377. https://doi.org/10.1016/j.jbusres.2020.07.001

Bhatti, S. H., Ahmed, A., Ferraris, A., Hirwani Wan Hussain, W. M., & Wamba, S. F. (2022). Big data analytics capabilities and MSME innovation and performance: A double mediation model of digital platform and network capabilities. *Annals of Operations Research*. https://doi.org/10.1007/s10479-022-05002-w

Binsaeed, R., Grigorescu, A., Yousaf, Z., Condrea, E., & Nassani, A. A. (2023). Leading Role of Big Data Analytic Capability in Innovation Performance: Role of Organizational Readiness and Digital Orientation. *Systems*, *11*, 284. https://doi.org/10.3390/systems11060284

Brock, W. A. (1983). Contestable Markets and the Theory of Industry Structure: A Review Article. *Journal of Political Economy*, *91*(6), 1055–1066.

Buldoo, D. R. (2018). *Leveraging big data analytics for competitive advantage in South African banking* [Mini Dissertation (MBA), University of Pretoria]. http://hdl.handle.net/2263/68831

Cao, G., Tian, N., & Blankson, C. (2022). Big Data, Marketing Analytics, and Firm Marketing Capabilities. *Journal of Computer Information Systems*, *62*(3), 442–451. https://doi.org/10.1080/08874417.2020.1842270

Cetindamar, D., Shdifat, B., & Erfani, S. (2020). *Assessing Big Data Analytics Capability and Sustainability in Supply Chains*. Hawaii International Conference on System Sciences. https://doi.org/10.24251/HICSS.2020.026

Chatterjee, S., Chaudhuri, R., Gupta, S., Sivarajah, U., & Bag, S. (2023). Assessing the impact of big data analytics on decision-making processes,

forecasting, and performance of a firm. *Technological Forecasting and Social Change*, *196*, 122824. https://doi.org/10.1016/j.techfore.2023.122824

Chen, X., & Ling, X. (2024). The influence mechanism of resource sharing on tourism industry innovation. *Heliyon*, *10*(4), e25855. https://doi.org/10.1016/j.heliyon.2024.e25855

Cheng, J., Mahinder Singh, H. S., Zhang, Y.-C., & Wang, S.-Y. (2023). The impact of business intelligence, big data analytics capability, and green knowledge management on sustainability performance. *Journal of Cleaner Production*, *429*, 139410. https://doi.org/10.1016/j.jclepro.2023.139410

Chong, C.-L., Abdul Rasid, S. Z., Khalid, H., & Ramayah, T. (2023). Big data analytics capability for competitive advantage and firm performance in Malaysian manufacturing firms. *International Journal of Productivity and Performance Management*. https://doi.org/10.1108/IJPPM-11-2022-0567

Clulow, V., Gerstman, J., & Barry, C. (2003). The resource-based view and sustainable competitive advantage: The case of a financial services firm. *Journal of European Industrial Training*, *27*, 220–232. https://doi.org/10.1108/03090590310469605

Collier, J. E. (2020). *Applied structural equation modeling using AMOS: Basic to advanced techniques*. Routledge.

Côrte-Real, N., Ruivo, P., & Oliveira, T. (2020). Leveraging internet of things and big data analytics initiatives in European and American firms: Is data quality a way to extract business value? *Information & Management*, *57*(1), 103141. https://doi.org/10.1016/j.im.2019.01.003

Craig, C. A., Ma, S., & Feng, S. (2023). Climate resources for camping: A resource-based theory perspective. *Tourism Management Perspectives*, *45*, 101072. https://doi.org/10.1016/j.tmp.2022.101072

Dahiya, R. (2021). Firm Performance in the Era of Big Data Analytics: The Effects of Analytical Human Capital on Firm Capabilities and Performance. *Doctoral Dissertations*. https://digitalcommons.latech.edu/dissertations/945

Dash, G., & Paul, J. (2021). CB-SEM vs PLS-SEM methods for research in social sciences and technology forecasting. *Technological Forecasting and Social Change*, *173*, 121092. https://doi.org/10.1016/j.techfore.2021.121092

De Pilli, T., Alessandrino, O., & Baiano, A. (2024). Quantitative descriptive analysis as a strategic tool in research activities relating to innovative meat tenderisation technologies. *Heliyon*, *10*(11), e32618. https://doi.org/10.1016/j.heliyon.2024.e32618

Dlamini, I. (2021). *Building dynamic capabilities that enable effective diffusion: The case of Development Finance Institutions (DFIs) in South Africa*. https://hdl.handle.net/10539/33282

Dmytro, T. (2024, September 9). Data Analytics in Finance: Capitalizing on Data in 2025 | SPD Technology. *Https://Spd.Tech/*. https://spd.tech/data/data-analytics-in-finance-turning-data-into-a-competitive-advantage-in-2024/

Donnellan, J., & Rutledge, W. L. (2019). A case for resource-based view and competitive advantage in banking. *Managerial and Decision Economics*, *40*(6), 728–737. https://doi.org/10.1002/mde.3041

Dubey, R., Gunasekaran, A., Childe, S. J., Bryde, D. J., Giannakis, M., Foropon, C., Roubaud, D., & Hazen, B. T. (2020). Big data analytics and artificial intelligence pathway to operational performance under the effects of entrepreneurial orientation and environmental dynamism: A study of manufacturing organisations. *International Journal of Production Economics*, *226*, 107599. https://doi.org/10.1016/j.ijpe.2019.107599

Elgendy, N., & Elragal, A. (2014). Big Data Analytics: A Literature Review Paper. In P. Perner (Ed.), *Advances in Data Mining. Applications and Theoretical Aspects* (Vol. 8557, pp. 214–227). Springer International Publishing. https://doi.org/10.1007/978-3-319-08976-8_16

Elshaer, I. A., AboAlkhair, A. M., Fayyad, S., & Azazz, A. M. S. (2023). Post-COVID-19 Family Micro-Business Resources and Agritourism Performance: A Two-Mediated Moderated Quantitative-Based Model with a PLS-SEM Data Analysis Method. *Mathematics*, *11*(2), 359. https://doi.org/10.3390/math11020359

Eni, L. N., Chaudhary, K., Raparthi, M., Palle, R. R., Balasubramanian, S., Bhat, A., & Srinu, C. (2023). Evaluating the Role of Artificial Intelligence and Big Data Analytics in Indian Bank Marketing. *Tuijin Jishu/Journal of Propulsion Technology*, *44*(4), 4422–4431.

Fantazy, K., & Tipu, S. A. A. (2023). Linking big data analytics capability and sustainable supply chain performance: Mediating role of knowledge development. *Management Research Review*. https://doi.org/10.1108/MRR-01-2023-0018

Faridoon, L., Liu, W., & Spence, C. (2024). The Impact of Big Data Analytics on Decision-Making Within the Government Sector. *Big Data*, big.2023.0019. https://doi.org/10.1089/big.2023.0019

Fedak, V. (2018, May 10). *Big Data analytics in the banking sector | IT Svit*. https://itsvit.com/blog/big-data-analytics-banking-sector/

Ferraris, A., Mazzoleni, A., Devalle, A., & Couturier, J. (2019). Big data analytics capabilities and knowledge management: Impact on firm performance. *Management Decision*, *57*(8), 1923–1936. https://doi.org/10.1108/MD-07-2018-0825

Flanagan, J. C. (1978). A research approach to improving our quality of life. *American Psychologist*, *33*(2), 138–147. https://doi.org/10.1037/0003-066X.33.2.138

Ghasemaghaei, M., & Calic, G. (2020). Assessing the impact of big data on firm innovation performance: Big data is not always better data. *Journal of Business Research*, *108*, 147–162. https://doi.org/10.1016/j.jbusres.2019.09.062

GO-Globe. (2023a, September 13). *AI and Big Data: Revolutionizing the ICT Sector of South Africa*. https://www.go-globe.com/artificial-intelligence-and-big-data-revolutionizing-the-ict-sector-of-south-africa/

GO-Globe. (2023b, October 17). *Banking and FinTech in South Africa in 2023—GO-Globe*. https://www.go-globe.com/banking-and-fintech-in-south-africa-in-2023/

Graham, B., & McCloskey, P. (2021, August 26). *The Role of Big Data Analytics Capabilities in Firm Performance: A systematic review of the literature and applications in Financial Services*. Irish Academy of Management, Irish Academy of Management.

Grant, R. M. (1996). Toward a Knowledge-Based Theory of the Firm. *Strategic Management Journal (1986-1998)*, *17*(Winter Special Issue), 109.

Groenewald, T. (2004). A Phenomenological Research Design Illustrated. *International Journal of Qualitative Methods*, *3*(1), 42–55. https://doi.org/10.1177/160940690400300104

Guba, E. G., & Lincoln, Y. S. (2005). Paradigmatic Controversies, Contradictions, and Emerging Confluences. In *The Sage handbook of qualitative research, 3rd ed* (pp. 191–215). Sage Publications Ltd.

Gupta, M., & George, J. (2016). Toward the development of a big data analytics capability. *Information & Management*, *53*(8), 1049–1064. https://doi.org/10.1016/j.im.2016.07.004

Gupta, M., Shaheen, M., & Reddy, P. (Eds.). (2019). *Qualitative Techniques for Workplace Data Analysis:* IGI Global. https://doi.org/10.4018/978-1-5225-5366-3

Gupta, S., Qian, X., Bhushan, B., & Luo, Z. (2019). Role of cloud ERP and big data on firm performance: A dynamic capability view theory perspective. *Management Decision*, *57*(8), 1857–1882. https://doi.org/10.1108/MD-06-2018-0633

Hair, J. F., Howard, M. C., & Nitzl, C. (2020). Assessing measurement model quality in PLS-SEM using confirmatory composite analysis. *Journal of Business Research*, *109*, 101–110. https://doi.org/10.1016/j.jbusres.2019.11.069

Hair, J. F., Hult, G. T. M., Ringle, C. M., Sarstedt, M., Danks, N. P., & Ray, S. (2021). An Introduction to Structural Equation Modeling. In J. F. Hair, G. T. M. Hult, C. M. Ringle, M. Sarstedt, N. P. Danks, & S. Ray, *Partial Least Squares Structural Equation Modeling (PLS-SEM) Using R* (pp. 1–29). Springer International Publishing. https://doi.org/10.1007/978-3-030-80519-7_1

Hammam, A. Z. (2024). *The Adoption of Big Data on Banks Performance*. http://scholar.ppu.edu/handle/123456789/9030

Hankins, E., Nettel, P. F., Martinescu, L., Grau, G., & Rahim, S. (2023, December 20). *Gov AI Readiness Index*. Oxford Insights. https://oxfordinsights.com/ai-readiness/ai-readiness-index/

Hasan, Md. M., Popp, J., & Oláh, J. (2020). Current landscape and influence of big data on finance. *Journal of Big Data*, *7*(1), 21. https://doi.org/10.1186/s40537-020-00291-z

Hollong, D. W. (2022). *Big data analytics capabilities and the organisational performance of South African retailers* [Magister Commercii - MCom (IM) (Information Management), University of the Western Cape]. http://hdl.handle.net/11394/10363

Holtom, B., Baruch, Y., Aguinis, H., & A Ballinger, G. (2022). Survey response rates: Trends and a validity assessment framework. *Human Relations*, *75*(8), 1560–1584. https://doi.org/10.1177/00187267211070769

Hox, J. J. (2021). Confirmatory Factor Analysis. In J. C. Barnes & D. R. Forde (Eds.), *The Encyclopedia of Research Methods in Criminology and Criminal Justice* (1st ed., pp. 830–832). Wiley. https://doi.org/10.1002/9781119111931.ch158

Hussain, S., Rehman, A., & Khokhar, M. N. (2021). Impact of Big Data Analytics on Firm Performance with Mediating Role of Decision-Making Performance and Innovation Capability. *International Journal of Innovation, Creativity and Change*, *15*(5), 1153 to 1172.

Huynh, M.-T., Nippa, M., & Aichner, T. (2023). Big data analytics capabilities: Patchwork or progress? A systematic review of the status quo and implications for future research. *Technological Forecasting and Social Change*, *197*, 122884. https://doi.org/10.1016/j.techfore.2023.122884

Iftikhar, A., Ali, I., & Shah, A. (2021). *The Impact of Big Data Analytics on Firm's Operational Performance: Mediating Role of Knowledge Management Process*.

In, J. (2017). Introduction of a pilot study. *Korean Journal of Anesthesiology*, *70*(6), 601. https://doi.org/10.4097/kjae.2017.70.6.601

Jahn, D. (2011). Conceptualizing Left and Right in comparative politics: Towards a deductive approach. *Party Politics*, *17*(6), 745–765. https://doi.org/10.1177/1354068810380091

Jawad, W. K., & Al-Bakry, A. M. (2022). Big Data Analytics: A Survey. *Iraqi Journal for Computers and Informatics*, *49*(1), 41–51. https://doi.org/10.25195/ijci.v49i1.384

Jeble, S., Dubey, R., Childe, S. J., Papadopoulos, T., Roubaud, D., & Prakash, A. (2018). Impact of Big Data & Predictive Analytics Capability on Supply Chain Sustainability. *International Journal of Logistics Management*, *29*(2), Article 2.

Jie, J. (2024). The Moderating Effect of Big Data Analytics Capabilities on the Relationship Between Organizational Culture and Administrative Effectiveness at Higher Education Institution in Sichuan. *Journal of Digitainability, Realism & Mastery (DREAM)*, *3*(01), 41–48. https://doi.org/10.56982/dream.v3i01.202

Joubert, A., Murawski, M., & Bick, M. (2023). Measuring the Big Data Readiness of Developing Countries – Index Development and its Application to Africa. *Information Systems Frontiers*, *25*(1), 327–350. https://doi.org/10.1007/s10796-021-10109-9

Jyoti, C., & Efpraxia, Z. (2023). Understanding and exploring the value co-creation of cloud computing innovation using resource based value theory: An interpretive case study. *Journal of Business Research*, *164*, 113970. https://doi.org/10.1016/j.jbusres.2023.113970

Keshavarz, H., Mahdzir, A. M., Talebian, H., Jalaliyoon, N., & Ohshima, N. (2021). The Value of Big Data Analytics Pillars in Telecommunication Industry. *Sustainability*, *13*(13), 7160. https://doi.org/10.3390/su13137160

Khalil, M. L., Aziz, N. A., Long, F., & Zhang, H. (2023). What factors affect firm performance in the hotel industry post-Covid-19 pandemic? Examining the impacts of big data analytics capability, organizational agility and innovation. *Journal of Open Innovation: Technology, Market, and Complexity*, *9*(2), 100081. https://doi.org/10.1016/j.joitmc.2023.100081

Kissi, P. S. (2024). Big data analytic capability and collaborative business culture on business innovation: The role of mediation and moderation effects. *Discover Analytics*, *2*(1), 2. https://doi.org/10.1007/s44257-024-00010-5

Kruesi, M. A., & Bazelmans, L. (2023). Resources, capabilities and competencies: A review of empirical hospitality and tourism research founded on the resource-based view of the firm. *Journal of Hospitality and Tourism Insights*, *6*(2), 549–574. https://doi.org/10.1108/JHTI-10-2021-0270

Lee, N., & Cadogan, J. W. (2013). Problems with formative and higher-order reflective variables. *Journal of Business Research*, *66*(2), 242–247. https://doi.org/10.1016/j.jbusres.2012.08.004

Linde, L., Sjödin, D., Parida, V., & Wincent, J. (2021). Dynamic capabilities for ecosystem orchestration A capability-based framework for smart city innovation initiatives. *Technological Forecasting and Social Change*, *166*, 120614. https://doi.org/10.1016/j.techfore.2021.120614

Lozada, N., Arias-Pérez, J., & Alexander, H.-G. (2023). Unveiling the effects of big data analytics capability on innovation capability through absorptive capacity: Why more and better insights matter. *Journal of Enterprise Information Management*. https://doi.org/10.1108/JEIM-02-2021-0092

Maréchal, L. (2020). *Longitudinal study of big data analytics capabilities in the pharmaceutical industry*. https://doi.org/10.13140/RG.2.2.11383.44967

McCombes, S. (2019, September 19). *Sampling Methods | Types, Techniques & Examples*. Scribbr. https://www.scribbr.com/methodology/sampling-methods/

McIntyre, L. (2018). Post-Truth. *European Journal of Communication*, *33*(5), 574–575. https://doi.org/10.1177/0267323118799184

McKinsey & Company. (2025, January 28). *Positioning for the future of the FDMI industry | McKinsey*. https://www.mckinsey.com/industries/financial-services/our-insights/financial-data-and-markets-infrastructure-positioning-for-the-future#/

McNeish, D., & Wolf, M. G. (2023). Dynamic fit index cutoffs for confirmatory factor analysis models. *Psychological Methods*, *28*(1), 61–88. https://doi.org/10.1037/met0000425

Mikalef, P., Boura, M., Lekakos, G., & Krogstie, J. (2019a). Big data analytics and firm performance: Findings from a mixed-method approach. *Journal of Business Research*, *98*, 261–276. https://doi.org/10.1016/j.jbusres.2019.01.044

Mikalef, P., Boura, M., Lekakos, G., & Krogstie, J. (2019b). Big Data Analytics Capabilities and Innovation: The Mediating Role of Dynamic Capabilities and Moderating Effect of the Environment. *British Journal of Management*, *30*(2), 272–298. https://doi.org/10.1111/1467-8551.12343

Mikalef, P., Krogstie, J., Pappas, I. O., & Pavlou, P. (2020). Exploring the relationship between big data analytics capability and competitive performance: The mediating roles of dynamic and operational capabilities. *Information & Management*, *57*(2), 103169. https://doi.org/10.1016/j.im.2019.05.004

Mithas, Ramasubbu, & Sambamurthy. (2011). How Information Management Capability Influences Firm Performance. *MIS Quarterly*, *35*(1), 237. https://doi.org/10.2307/23043496

Moody, A. (2015). *The Impact of Big Data Analytics on the Banking Industry*. https://doi.org/10.13140/RG.2.1.1138.4163

Morimura, F., & Sakagawa, Y. (2023). The intermediating role of big data analytics capability between responsive and proactive market orientations and firm performance in the retail industry. *Journal of Retailing and Consumer Services*, *71*, 103193. https://doi.org/10.1016/j.jretconser.2022.103193

Moyikwa, Y. (2024). *Leveraging big data analytics and capabilities for data-driven decision-making in South African banking*. http://hdl.handle.net/2263/96144

Naidu, D. (2023). *Dynamic capabilities and digital transformation for innovation in the south african mining industry*. https://hdl.handle.net/10539/37208

Nani, A. (2023). Valuing big data: An analysis of current regulations and proposal of frameworks. *International Journal of Accounting Information Systems*, *51*, 100637. https://doi.org/10.1016/j.accinf.2023.100637

Nanjundeswaraswamy, T. S., & Divakar, S. (2021). DETERMINATION OF SAMPLE SIZE AND SAMPLING METHODS IN APPLIED RESEARCH. *Proceedings on Engineering Sciences*, *3*(1), 25–32. https://doi.org/10.24874/PES03.01.003

Naz, S., Haider, S. A., Khan, S., Nisar, Q., & Tehseen, S. (2023). Augmenting hotel performance in Malaysia through big data analytics capability and artificial intelligence capability. *Journal of Hospitality and Tourism Insights*. https://doi.org/10.1108/JHTI-01-2023-0017

Ocasio, W. (1997). Towards an Attention-Based View of the Firm. *Strategic Management Journal (1986-1998)*, *18*(Summer Special Issue), 187.

Olabode, O. E., Boso, N., Hultman, M., & Leonidou, C. N. (2022). Big data analytics capability and market performance: The roles of disruptive business models and competitive intensity. *Journal of Business Research*, *139*, 1218–1230. https://doi.org/10.1016/j.jbusres.2021.10.042

Park, Y. S., Konge, L., & Artino, A. R. (2020). The Positivism Paradigm of Research. *Academic Medicine*, *95*(5), 690–694. https://doi.org/10.1097/ACM.0000000000003093

Parpala, A., & Lindblom-Ylänne, S. (2012). Using a research instrument for developing quality at the university. *Quality in Higher Education*, *18*(3), 313–328. https://doi.org/10.1080/13538322.2012.733493

Phoenix, C., Osborne, N. J., Redshaw, C., Moran, R., Stahl-Timmins, W., Depledge, M. H., Fleming, L. E., & Wheeler, B. W. (2013). Paradigmatic approaches to studying environment and human health: (Forgotten) implications for interdisciplinary research. *Environmental Science & Policy*, *25*, 218–228. https://doi.org/10.1016/j.envsci.2012.10.015

Pillay, K., & Van Der Merwe, A. (2021). A Big Data Driven Decision Making Model: A case of the South African banking sector. *South African Computer Journal*, *33*(2). https://doi.org/10.18489/sacj.v33i2.928

Rahman, A., & Muktadir, Md. G. (2021). SPSS: An Imperative Quantitative Data Analysis Tool for Social Science Research. *International Journal of Research and Innovation in Social Science*, *05*(10), 300–302. https://doi.org/10.47772/IJRISS.2021.51012

Rahman, N. (2023). *Measurements of Data Analytics Capability Construct*. https://doi.org/10.21203/rs.3.rs-2672354/v1

Rianawati, A., Kresna Darmasetiawan, N., Susilo Hadi, F., Oktavianus, J., & Avelinda Utama, C. (2024). Enhancement of Indonesia's blue economy sector through innovation and competitive advantage based on Resource-Based View theory. *Problems and Perspectives in Management*, *22*(2), 165–181. https://doi.org/10.21511/ppm.22(2).2024.14

Rizvi, S., Ali, M., & Raza, H. (2023). The Role of Big Data Analytics Capability to Achieve Competitive Advantage with the Mediation of Business Model Innovation: A Dynamic Capability View. *Global Management Sciences Review*, *VIII*, 34–53. https://doi.org/10.31703/gmsr.2023(VIII-I).03

Sabharwal, R., & Miah, S. J. (2021). A new theoretical understanding of big data analytics capabilities in organizations: A thematic analysis. *Journal of Big Data*, *8*(1), 159. https://doi.org/10.1186/s40537-021-00543-6

Sahoo, S., Upadhyay, A., & Kumar, A. (2023). Circular economy practices and environmental performance: Analysing the role of big data analytics capability and responsible research and innovation. *Business Strategy and the Environment*, *32*(8), 6029–6046. https://doi.org/10.1002/bse.3471

Said, F., Zainal, D., & Abdul Jalil, A. (2023). Big data analytics capabilities (BDAC) and sustainability reporting on Facebook: Does tone at the top matter? *Cogent Business & Management*, *10*(1), 2186745. https://doi.org/10.1080/23311975.2023.2186745

Sakib, N., Bhuiyan, A. K. M. I., Hossain, S., Al Mamun, F., Hosen, I., Abdullah, A. H., Sarker, Md. A., Mohiuddin, M. S., Rayhan, I., Hossain, M., Sikder, Md. T., Gozal, D., Muhit, M., Islam, S. M. S., Griffiths, M. D., Pakpour, A. H., & Mamun, M. A. (2022). Psychometric Validation of the Bangla Fear of COVID-19 Scale: Confirmatory Factor Analysis and Rasch Analysis. *International Journal of Mental Health and Addiction*, *20*(5), 2623–2634. https://doi.org/10.1007/s11469-020-00289-x

Sall, M. I., Coulibaly, B., Cheick, H., Sall, Dit, M., & Sall, D. (2023). *Impact of Big Data Analytics Capability on the Circular Economy capability of Chinese Manufacturing firms: Mediating Role of Knowledge of, practice of, and commitment to Environmental sustainability orientation*. https://doi.org/10.2015/IJIRMF/202305040

Salleh, K., & Janczewski, L. (2016). *Adoption of Big Data Solutions: A study on its security determinants using Sec-TOE Framework*. International Conference on Information Resources Management. https://www.semanticscholar.org/paper/Adoption-of-Big-Data-Solutions%3A-A-study-on-its-Salleh-Janczewski/3e8075506a090e44668a511c1bba3d76c1f062cb

Samsudin, Z. B., & Ismail, M. D. (2019). The Concept of Theory of Dynamic Capabilities in Changing Environment. *International Journal of Academic Research in Business and Social Sciences*, *9*(6), Pages 1071-1078. https://doi.org/10.6007/IJARBSS/v9-i6/6068

Sataloff, R. T., & Vontela, S. (2021). Response Rates in Survey Research. *Journal of Voice*, *35*(5), 683–684. https://doi.org/10.1016/j.jvoice.2020.12.043

Sharif, S. (2023). Big Data Processing in the Cloud: Scalable and Real-time Data. *Saqib Luqman*. https://www.researchgate.net/publication/372826008_Big_Data_Processing_in_the_Cloud_Scalable_and_Real-time_Data#fullTextFileContent

Shdifat, B. A. (2022). *Big Data Analytic Capabilities Playing a Critical Role in Sustainability performance of Supply Chain at Australian Organisations* [DOCTOR OF PHILOSOPHY (INFORMATION SYSTEMS), University of Technology Sydney]. https://opus.lib.uts.edu.au/bitstream/10453/162581/2/02whole.pdf

Sivarajah, U., Kumar, S., Kumar, V., Chatterjee, S., & Li, J. (2024). A study on big data analytics and innovation: From technological and business cycle perspectives. *Technological Forecasting and Social Change*, *202*, 123328. https://doi.org/10.1016/j.techfore.2024.123328

Sneha, N. P., & Keerthana, M. M. (2021). SURVEY ON BIG DATA ANALYTICS. *International Journal of Creative Research Thoughts (IJCRT)*, *9*(8), 92–96.

Sohu, J. M., Hongyun, T., Akbar, U. S., & Hussain, U. S. (2023). *Digital Innovation, Digital Transformation, and Digital Platform Capability: Detrimental Impact of Big Data Analytics Capability on Innovation Performance*. https://doi.org/10.5281/ZENODO.10498159

Soltani, M. D., Hajiheydari, N., & Fahimi, S. M. (2021). Elucidation of big data analytics in banking: A four-stage Delphi study. *Journal of Enterprise Information Management*, *34*(6), 1577–1596. https://doi.org/10.1108/JEIM-03-2019-0097

Sospeter, D. (2020). *CHAPTER THREE RESEARCH METHODOLOGY 3.0 Introduction*.

Stephan, K. E., & Friston, K. J. (2009). Functional Connectivity. In L. R. Squire (Ed.), *Encyclopedia of Neuroscience* (pp. 391–397). Academic Press. https://doi.org/10.1016/B978-008045046-9.00308-9

Stock, X. (2022). *Governance and dynamic capabilities in South African state-owned energy companies*. https://hdl.handle.net/10539/34742

Surbakti, F. P. S., Wang, W., Indulska, M., & Sadiq, S. (2020). Factors influencing effective use of big data: A research framework. *Information & Management*, *57*(1), 103146. https://doi.org/10.1016/j.im.2019.02.001

Sutton, N. (2023, July 19). *The role of technology in the finance industry | OneAdvanced*. https://www.oneadvanced.com/resources/the-role-of-technology-in-the-finance-industry/

Taber, K. S. (2018). The Use of Cronbach's Alpha When Developing and Reporting Research Instruments in Science Education. *Research in Science Education*, *48*(6), 1273–1296. https://doi.org/10.1007/s11165-016-9602-2

Teece, D. J., Pisano, G., & Shuen, A. (1997). Dynamic Capabilities and Strategic Management. *Strategic Management Journal*, *18*(7), 509–533.

Tiao, S. (2024, March 11). *What Is Big Data?* [Oracle South Africa]. https://www.oracle.com/za/big-data/what-is-big-data/

Varadarajan, R. (2020). Customer information resources advantage, marketing strategy and business performance: A market resources based view. *Industrial Marketing Management*, *89*, 89–97. https://doi.org/10.1016/j.indmarman.2020.03.003

Varadarajan, R. (2023). Resource advantage theory, resource based theory, and theory of multimarket competition: Does multimarket rivalry restrain firms from leveraging resource Advantages? *Journal of Business Research*, *160*, 113713. https://doi.org/10.1016/j.jbusres.2023.113713

Vitari, C., & Raguseo, E. (2020). Big data analytics business value and firm performance: Linking with environmental context. *International Journal of Production Research*, *58*(18), 5456–5476. https://doi.org/10.1080/00207543.2019.1660822

Wamba, S. F., Gunasekaran, A., Akter, S., Ren, S. J., Dubey, R., & Childe, S. J. (2017). Big data analytics and firm performance: Effects of dynamic capabilities. *Journal of Business Research*, *70*, 356–365. https://doi.org/10.1016/j.jbusres.2016.08.009

Wang, X., Kim, J., Kim, J., & Koh, Y. (2024). Application of Natural-Resource-Based View to Nature-Based Tourism Destinations. *Sustainability*, *16*(6), 2375. https://doi.org/10.3390/su16062375

Wang, Y., Kung, L., Gupta, S., & Ozdemir, S. (2019). Leveraging Big Data Analytics to Improve Quality of Care in Healthcare Organizations: A Configurational Perspective. *British Journal of Management*, *30*(2), 362–388. https://doi.org/10.1111/1467-8551.12332

Watson, R. (2015). Quantitative research. *Nursing Standard*, *29*(31), 44–48. https://doi.org/10.7748/ns.29.31.44.e8681

Wernerfelt, B. (1984). A Resource-Based View of the Firm. *Strategic Management Journal*, *5*(2), 171–180.

Wilden, R., Gudergan, S. P., Nielsen, B. B., & Lings, I. (2013). Dynamic Capabilities and Performance: Strategy, Structure and Environment. *Long Range Planning*, *46*(1–2), 72–96. https://doi.org/10.1016/j.lrp.2012.12.001

Wu, M.-J., Zhao, K., & Fils-Aime, F. (2022). Response rates of online surveys in published research: A meta-analysis. *Computers in Human Behavior Reports*, *7*, 100206. https://doi.org/10.1016/j.chbr.2022.100206

Yasmin, M., Tatoglu, E., Kilic, H. S., Zaim, S., & Delen, D. (2020). Big data analytics capabilities and firm performance: An integrated MCDM approach. *Journal of Business Research*, *114*, 1–15. https://doi.org/10.1016/j.jbusres.2020.03.028

Yoshikuni, A. C., Dwivedi, R., Zhou, D., & Wamba, S. F. (2023). Big data and business analytics enabled innovation and dynamic capabilities in organizations: Developing and validating scale. *International Journal of Information Management Data Insights*, *3*(2), 100206. https://doi.org/10.1016/j.jjimei.2023.100206

Yu, W., Zhao, G., Liu, Q., & Song, Y. (2021). Role of big data analytics capability in developing integrated hospital supply chains and operational flexibility: An organizational information processing theory perspective. *Technological Forecasting and Social Change*, *163*, 120417. https://doi.org/10.1016/j.techfore.2020.120417

Zhang, H., & Yuan, S. (2023). How and When Does Big Data Analytics Capability Boost Innovation Performance? *Sustainability*, *15*, 4036. https://doi.org/10.3390/su15054036

APPENDIX A – Purpose of the Study

Dear Sir / Madam

My name is Sinah Molepo. I am a Masters student in Digital Business at the University of the Witwatersrand, Johannesburg. My supervisor is Dr Thubelihle Ndlela. I am conducting a research study about big data, and I am interested in examining the relationship between big data analytics capabilities and the firm performance. The title of my study is **The impact of Big Data Analytics Capabilities on the performance of South African Financial Sectors.**

The targeted demographics of this study are individuals who are data and analytics professionals or managers in South African financial sectors.

I am inviting you to take part in a questionnaire completion. If you decide to take part, your participation in this research study will last about 10 - 15 minutes. Please kindly follow the link to the survey below.

LINK

Your response to this study is important and there are no wrong or right answers. Anonymity and confidentiality are guaranteed as you do not need to provide your name or identity number. Your participation is completely voluntary and involves no risk, penalty, or loss of benefits whether you participate or not. It is therefore requested that you answer all questions honestly and as best as you can. As participation in this study is voluntary, you may withdraw at any phase. Please note that completing and returning this questionnaire will be regarded as consent that you have agreed to take part in the study.

Yours sincerely,
Sinah Molepo

Researcher:
Sinah Molepo, 2598270@students.wits.ac.za, 0791650707

Supervisor:
Dr Thubelihle Ndlela, thubelihle.ndlela@wits.ac.za

Appendix B – Participants Consent Form

The impact of Big Data Analytics Capabilities on the performance of South African Financial Sectors
By Sinah Molepo

I agree to participate in this research project. YES NO

I agree to the following:

(Please select the relevant options below)

The research study was explained to me. I understand what this study is about.	YES	NO
I understand that I can volunteer to take part in the study	YES	NO
I agree that my participation will remain anonymous (my name or other identifying data will not be used by the researcher in their research report/manuscript/book chapter)	YES	NO
I agree that other researchers may use the information I provide in my interview/focus group/other activity (depending on their own ethics clearance being obtained) but my name and any personal information will not be used or passed on	YES	NO

Appendix C – Questionnaire

Section 1 - Backgroud Information	Options
1. What is the type of your financial sector?	Bank, Insurance, fintech, payment services
2. How many People are employed in your organisation?	1-4, 5-19, 20-99, 100-199, 200-1000, over 1000 employees
3. What is your gender?	Female, Male, Prefer not to say
4. What is your title?	Chief Infortmation Officer, Senoir Manager, Manager, Data and analytics specialist, Infrustructure Specialist, System and Network administrator
5. What is your education status?	Secondary Education, College Education, Undergraduate Degree, Postgraduate Degree
6. For how long have you been working for the organisation?	Less than a year, 1-3 years, 4-10 years, 10-20 years, more than 20 yeears

Section 2: Tangible Big Data Analytics Cabability	1 – Strongly disagree	2 – Disagree	3 – Somewhat disagree	4 – Neither agree or disagree	5 – Somewhat agree	6 – Agree	7 – Strongly agree
Infrustructure							
I1. Compared to rivals within our industry, our organization has the foremost available analytics systems.							
I2. All other (e.g., remote, branch, and mobile) offices are connected to the central office for sharing analytics insights.							
I3. Our organization utilizes open systems network mechanisms to boost analytics connectivity.							
I4. There are no identifiable communications bottlenecks within our organization for sharing analytics insights.							
I5. Software applications can be easily used across multiple analytics platforms.							
I6. Our user interfaces provide transparent access to all platforms.							
I7. Information is shared seamlessly across our organization, regardless of the location.							
I8. Reusable software modules are widely used in new system development.							
I9. End users utilize object-oriented tools to create their own applications							
I10. Analytics personnel utilize object-oriented technologies to minimize the development time for new applications.							
I11. The legacy system within our organization restricts the development of new applications.							
Technology							
T1. We have explored or adopted parallel computing approaches (e.g., Hadoop) to big data processing							
T2. We have explored or adopted different data visualization tools							
T3. We have explored or adopted new forms of databases such as Not Only SQL(NoSQL)							
T4. We have explored or adopted cloud-based services for processing data and performing analytics							
T5. We have explored or adopted open-source software for big data analytics							
Data							
D1. We have access to very large, unstructured, or fast-moving data for analysis							
D2. We integrate data from multiple sources into a data warehouse for easy access							
D3. We integrate external data with internal to facilitate analysis of business environment							

Section 3: Intangible Big Data Analytics Cabability	1 – Strongly disagree	2 – Disagree	3 – Somewhat disagree	4 – Neither agree or disagree	5 – Somewhat agree	6 – Agree	7 – Strongly agree
Data driven culture							
DD1. We base our decisions on data rather than on instinct							
DD2. We are willing to override our own intuition when data contradict our viewpoints							
DD3. We continuously coach our employees to make decisions based on data							
DD4. We continuously assess and improve the business rules in response to insights extracted from data							
DD5. We continuously coach our employees to make decisions based on data							
Learning organisation Cultutre							
LO1. We are able to search for new and relevant knowledge							
LO2. We are able to acquire new and relevant knowledge							
LO3. We are able to assimilate relevant knowledge							
LO4. We are able to apply relevant knowledge							
LO5. We have made concerted efforts for the exploitation of existing competencies and exploration of new knowledge.							

Section 4: Human Resource Big Data Analytics Cabalities	1 – Strongly disagree	2 – Disagree	3 – Somewhat disagree	4 – Neither agree or disagree	5 – Somewhat agree	6 – Agree	7 – Strongly agree
Management							
MR1. Our big data analytics managers are able to work with functional managers, suppliers, and customers to determine opportunities that big data might bring to our business							
MR2. Our DBA managers are able to coordinate big data-related activities in ways that support other functional managers, suppliers, and customers							
MR3. Our BDA' managers are able to understand and evaluate the output extracted from big data							
MR4. Our BDA' managers are able to understand where to apple big data							
MR5 Our big data analytics managers understand and appreciate the business needs of other functional managers,suppliers, and customers.							
MR6 Our big data analytics managers are able to anticipate the future business needs of functional managers, suppliers, andcustomers							
Personnel							
PS1. Our 'big data analytics' staff has the right skills to accomplish their jobs successfully							
PS2. Our 'big data analytics' staff is well trained							
PS3. We provide big data analytics training to our own employees							
PS4. Our 'big data analytics' staff has suitable education to fulfil their jobs							
PS5 Our big data analytics staff holds suitable work experience to accomplish their jobs successfully							
PS6 Our big data analytics staff is well trained							

Section 5: Dynamic Capabilities	1 – Strongly disagree	2 – Disagree	3 – Somewhat disagree	4 – Neither agree or disagree	5 – Somewhat agree	6 – Agree	7 – Strongly agree
DYN1. Products and services in our industry become obsolete very quickly							
DYN2. The product/services technologies in our industry change very quickly							
DYN3. We can predict what our competitors are going to do next (Reverse coded)							
DYN4. We can predict when our products/services demand changes (Reverse coded)							
DYN5. Our organisation frequently generates, disseminates and responds to market intelligence about customer needs							
DYN6. Our organisation has adequate routines to acquire, assimilate, transform and exploit existing resources to generate new knowledge							
DYN7. Our organisation is effective in managing dependencies among resources and tasks to synchronize activities							
DYN8. Our organisation effectively integrates disparate employees' inputs through heedful contribution, representation, and interrelation into our group							

Section 6: Firm Perfomance	1 – Strongly disagree	2 – Disagree	3 – Somewhat disagree	4 – Neither agree or disagree	5 – Somewhat agree	6 – Agree	7 – Strongly agree
Market Performance							
MP1 We have entered new markets more quickly than our competitors							
MP2 We have introduced new products or services to the market faster than our competitors.							
MP3 Our success rate of new products or services has been higher than our competitors.							
MP4 Our market share has exceeded that of our competitors.							
Operational perfomance							
OP1 Our productivity has exceeded that of our competitors							
OP2 Our profit rate has exceeded that of our competitors.							
OP3 Our return on investment (ROI) has exceeded that of our competitors.							
OP4 Our sales revenue has exceeded that of our competitors.							

Appendix D – Ethics Clearance Certificate

Graduate School of Business Administration
University of the Witwatersrand, Johannesburg

Wits Business School

Wits Business School Ethics Committee
Constituted under the University Human Research Ethics Committee (Non-Medical)

Ethics Clearance Certificate

Ethics protocol number:	WBS/DB2598270/899

This certificate is only valid with a legitimate ethics protocol number and signed by the Researcher (below).

Project title	The impact of big data analytics capabilities on the performance of South African financial sectors
Investigator / Researcher	Ms Sinah Molepo
Nature of Project	MM (Digital Business)
Decision of the Committee	Approved, provided stakeholders and participants are guaranteed anonymity and confidentiality.
Issue Date of Certificate	02/09/2024
Expiry date	Date of submission of the project / research report
Chairperson	Dr Ayanda Magida ☎ +27 11 717 3953 ✉ ayanda.magida@wits.ac.za

Declaration by Researcher

One copy must be signed by the Researcher and returned to the Chairperson of the Wits Business School Ethics Committee.

I fully understand the conditions under which I am authorized to carry out the abovementioned research and I guarantee to ensure compliance with these conditions. Should any departure to be contemplated from the research procedure as approved I undertake to resubmit the protocol to the Committee.

Signature

03/09/2024
Date: