

https://dspace.org/

Computer aided design of reflective surfaces in auditoria

Cilliers, Bartolomeus Johannes Le Roux

2015-01-13
http://hdl.handle.net/10539/16510

Downloaded from a DSpace repository. https://dspace.org/

COMPUTER AIDED DESIGN OF REFLECTIVE SURFACES IN AUDITORIA

Bartolomeus Johannes le Roux Cilliers

A Dissertation Submitted to the Faculty of Engineering, University of the Witwatersrand, Johannesburg in partial fulfilment of the requirements for the Degree of Master of Science.

JOHANNESBURG 1976

ABSTRACT

The determination of the position and size of reflective panels used in auditoria to reinforce the direct sound is investigated. Associated acoustical design parameters like optimum direct to reverberant sound intensity ratio, auditorium shape, reverberation time, background noise and their effect on acoustical performance are also discussed on a qualitative basis.

An extensive survey of the literature on the subject was made, revealing the total absence of any analytical approach to the problem. Using the findings of various researchers in the field an analytic approach to the problem is developed.

The whole approach is centered on the use of a digital computer capable of compiling Fortran IV programmes. In order to keep the whole system as flexible as possible a set of subroutine programmes is developed, covering a number of design cases.

The design problem is reduced to defining a reflective surface in space and locating any number of additional points on it to cover a specific area in the audience.

Two worked out examples are included to illustrate the use of the programmes.

ACKNOWLEDGEMENTS

The author is indebted to Professor H.E. Hanrahan for his invaluable guidance in the preparation of this paper.

CONTENTS PAGE

1. INTRODUCTION 1

2. DEVELOPING AN APPROACH TO THE DESIGN OF REFLECTIVE SURFACES 6

3. DERIVATION OF ANALYTIC RELATIONS 10

4. COMPUTER SUBROUTINES 24

5. ILLUSTRATIVE EXAMPLES 26

6. CONCLUSIONS 40

APPENDIXES

I EXPLANATION FOR 3.4.4.1 (i)

II EXPLANATION FOR 3.4.4.2 (i)

III SUBROUTINE FIPAM

IV SUBROUTINE FIPZV

V SUBROUTINE FIPXV

VI SUBROUTINE ANYPT

VII CALLING PROGRAMMES

1.0 INTRODUCTION

The one generally accepted fact typifying acoustical design is that for any solution presented to an acoustical problem, at least one condemning opinion can be found. Essentially then, the success of a solution is determined by the degree of acceptance it meets with. The design method can be reduced to the determination of what the majority regards as desirable and translating these requirements into physical terms.

Regardless of what these desirable properties turn out to be, their physical equivalents inevitably lead to contradictions calling for a compromise. At this stage of the design the designer cannot return to the majority opinion, because more often than not they are not in a position to judge due to lack of understanding and knowledge. Translating desirable properties into physical requirements poses the biggests single problem, as the physiological and psychological mechanisms involved are not fully understood at all. With the behavioural sciences themselves in their infancy it is quite clear that an enormous amount of research is still to be done before exact solutions can be obtained. Progress in the field of acoustical technology has been slow compared to other technologies and is mostly the result of research done by acoustic consultants, universities and a few government institutions. Considering the limited funds available however, the development gained has been substantial.

1.1 Important parameters in acoustical design of auditoria:

There are several physically measureable parameters which can be determined in the design stage to fall within certain limits. An excellent reference is a book[1] by Beranek giving an overall picture of what is involved. In the following an attempt is made to give a general view of these parameters concerning the vital issues in the acoustical design of auditoria. This is done with the specific object in mind of giving a fair definition of the relevant parameters involving the design of reflective panels.

1.1.1 Reverberation/.....

1.1.1 Reverberation time

This is most probably the best known and most important single parameter in acoustic design. The calculation and definition of reverberation time was determined from statistical reverberation theory by Jäger,[2] Sabine,[3] Norris[4] and others.[5,6,7] In 1958 Kuttruff[8] predicted the characteristic bending of these curves in a theoretical analysis. As for the calculation of reverberation times in actual auditoria, Doranek showed[9] that calculations based on an area basis rather than a per person basis yield a closer approximation to measured values.

In measuring reverberation times the usual method employed is to use random noise in conjunction with one third octave band filters and a logarithmic recorder. The exact form of the delay curves depend on the initial amplitudes and phase angles of the signals exciting the various normal resonant modes of the auditorium. Due to their mutual beating a different curve will be obtained for each trial because of the randomness of the exitation signal. This phenomenon leads to a complete masking of multiple decay rates in most cases.

Schroeder[10] proposed a method to obtain the ensemble average of an infinite member of measurements in a single measurement. Kuttruff et al[11] using the same principle, proposed a simple experimental method giving the same results. Using this method accurate repeatable results are obtained revealing the exact nature of decay curves. It has long been agreed amongst writers [7,10,12] that the first ten to twenty decibels of the decay curve is extremely important in determining the acoustical character of auditoria. For recommended design values of reverberation times references (1) and (13) should be consulted. In general any activity requiring high definition requires a shorter reverberation time, e.g. speech and chamber music. Longer reverberation times are required to create

a/.....

a blended lingering sound - such as needed for Romantic music. Another important fact is that the reverberant sound characterises the tonal balance in an auditorium. Studies by Watters and Schultz[15] confirmed by Sessler and West[16] indicate a serious deficiency in low frequency sound passing at or near grazing incidence over an audience. From tests performed by Beranek[14] it is evident that the missing l.f. component is furnished by the reverberant sound field. A strong low frequency component in the reverberant sound field can only be obtained with a long low frequency reverberation time. If rich bass is desired, care should be taken to ensure little absorption at low frequencies.

1.1.2 Early sound

The term 'early sound' as used here refers to the direct sound plus any reflections arriving within the first 40 m.s. or so. The exact limit varies from one person to the next due to individual differences. The limit of 40 m.s. is however, a conservative one.

It is generally agreed that a listener relies on early sound for clarity and definition, obtaining this information from the middle and higher registers as has been shown by Beranek and Schultz[14]. The ratio between reverberant and direct sound should be carefully adjusted for optimum blend as dictated by the type of activity. For speech applications maximum clarity is desired requiring as much early sound as possible. Music would require something in-between, depending on the type.

Obviously there are limits to what can be achieved with a given reverberation time. For example, reasonable definition could be obtained with a long reverberation time (two seconds) by using overhead reflectors. These would strengthen the early sound while at the same time 'starving' the reverberant sound field.

Desirable ratios of reverberant to early sound energy are given

in/.....

in reference 14, p.312. From the results of tests performed and reported in the same paper, it seems that this energy ratio is rather critical in determining the amount of 'running liveness' as defined in reference 1, p.23.

1.1.3 Masking

In a paper[17] Marshall determined early reflection masking by using data from Schubert[18], Watters et al[15] and Bolt et al[7]. The results obtained clearly indicate that in a wide hall, overhead reflections precede lateral ones and consequently mask them completely. In a long rectangular hall the lateral reflections precede the overhead ones and none of the principal reflections are masked. Data from Schubert[18] indicates that the masking threshold for lateral reflections normal to the principal sound is approximately ten decibels lower than that for sound arriving from the same direction as the direct sound. Combining these facts, Marshall draws the conclusion that these phenomena are responsible for the superb acoustics of long rectangular halls.

The rich bass found in these halls is then explained as follows: The incident angle of the lateral reflections on the audience is so large that the low frequency attenuation[15,16] by the audience is negligible. This combined with lower masking levels for lateral normal sound is taken to account for the strong low frequency component. From the work of Beranek and Schultz[14] it is clear that spectral balance is judged from the reverberant sound and not from early sound. In an attempt to clarify the reasons for the superb acoustics of long narrow halls, the following can be observed.

(i) The skeletal reflections in the narrow hall are unmasked and reach the listener within 20 to 40 ms. after the direct sound. In the wide hall, most of the reflections are masked

and/.....

and those that are not, reach the listener within 40 to 60 ms. after the direct sound. The early sound would therefore be much louder in the narrow hall, giving a better balance of the early sound to reverberant sound energy ratio already mentioned. In the narrow hall there would also be short time-delay early reflections essential for good definition as shown by Beranek[1].

(ii) As shown by von Békésy[25] backward inhibition occurs when a reflection reaches the listener about 60 ms. after the direct sound. The nett effect is a reduced perceived loudness and an increase in the size of the sound image produced by the direct sound. The likelyhood for such reflections to occur in the wide hall is a lot greater than in the narrow hall.

1.1.4 Negative attributes

One of the basic requirements for good acoustics is the total absence of echoes, sound focussing, unwanted noise, etc. If these are present they can only impair the acoustical performance of a hall.

2.0 DEVELOPING/.....

2.0 DEVELOPING AN APPROACH TO THE DESIGN OF REFLECTIVE SURFACES

Considering the ever increasing audience numbers and diversity of uses an auditorium is put to, it has become a necessity to provide some means of adjusting the acoustics of a proposed auditorium. As the optimum conditions for say music concerts, differ considerably from those for a play, the best that can be achieved without adjustability is a bad compromi .

One of the basic requirements for any type of activity is a proper stage enclosure. For example, during concert performances a rigid enclosure and overhead reflectors would be required to reflect a well balanced sound into the hall. This enclosure also aids the various sections of the orchestra in hearing each other better resulting in a better ensemble. General details for suitable enclosures can be found in references 18 and 19.

In the past most of the effort in providing adjustability went into reverberation control. In one case, that of the Oberlin conservatory for music, use is made of 6 000 square feet of adjustable curtain, resulting in a reverberation time adjustment range of 1,2 to 2,3 seconds. In the recent past however, a new method has been proposed by Beranek and Schultz[14]. The method consists of varying the ratio between reverberant and early sound energy by changes in an array of overhead panels. As the effective range over which this ratio has to be varied to obtain the desired effect is very narrow, it offers an interesting possibility. By relatively small changes of this ratio, large accompanying changes in sound quality are obtained.[14]

By changing the number of overhead panels, two parameters are affected.

(i) . . portion of the sound energy radiated by the source, which would normally excite the reverberant sound field is changed. Not only can the reverberant sound field be "starved" but the reverberation curves can be made to exhibit a dual slope. A fast initial drop

pointing/.....

pointing to short reverberation time and a lower slope indicating the normal reverberation of the hall. As already discussed the reverberation impression is largely conveyed by the first 10 to 15 decibels of the decay.

(ii) The early sound energy is changed. Because both parameters featuring in the energy ratio are effected, the ratio would be very senstive to changes in the number of panels.

2.1 Design object:

Any design process involving overhead reflectors has been mostly empirical, and is usually completed by cut and try. The "tuning" of Boston Symphony hall[1] can be cited as an excellent example - in this case use was made of highly directional loudspeakers to eliminate dead spots. Another fact emerging from the available literature is that most workers in the field are somewhat secretive as to the exact methods employed.

By using a systematic approach involving a digital computer, the positions and dimensions of a series of panels can be determined which will cover any section of the audience as desired. There are such a vast number of possibilities that only general guidelines will be given.

2.2 Design Considerations:

A number of important factors involved in the design of reflective panels are considered in an attempt to give the designer some background and ideas for his particular design.

2.2.1 Size of panels

The reflected sound reaching the listener need not contain low frequency components as they are not necessary for good definition[20].

The/.....

The listener relies on the reverberant sound for spectral balance judgement, the reflected sound serving the purpose of reinforcing the early sound and providing short time-delay reflections if these are absent in the normal hall. These assumptions limit the size of the panels to that required for reflecting the lowest frequency of interest satisfactorily.

If five hundred hertz is taken as the lower limit, the shortest dimension is about four feet. Studies by Wiener[22] show that the smallest dimension should not be less than $10/K$ where $K = 2\pi/\lambda$. These limits are not absolute and the transitions involved are by no means abrupt in nature.

By placing the panels close to the source their area will be smaller for the same audience area coverage as they reflect a larger solid angle of the radiated sound. The size is however also dependant on the time-delay required. In some cases the positions of the panels may be limited by practical considerations such as feasible positions in an existing hall.

The number of panels required will depend on the balance between early and reverberant sound energy, which will in turn be determined by the type of application. For details Beranek[1] and Beranek et al[14] should be consulted. Predictions of these ratios fall beyond the scope of this work, but they could be measured and changed without major reconstructions if changes are anticipated at the design stage.

2.2.2 Division of audience area

In all but the simplest cases the audience area will have to be subdivided into smaller areas which can be approximated as flat surfaces. Having made this division the designer can proceed by calculating the position and size of each corresponding reflector, taking into account all relevant factors.

As/.....

As the delay time can vary over a reasonable range without any appreciable change in acoustical effect, the designer need not be too concerned about approximating a curved audience area with a number of flat surfaces.

2.2.3 Choice of subroutine

In the next section a number of subroutines for use with a digital computer programme are derived, differing only in the parameters which are taken to be fixed for a specific design case. From the explanations accompanying the derivation, the different cases are clearly defined.

Basically the approach consists of defining the reflective surface as a plane in space by fixing its angle and calculating one point on it. Once the plane has been defined any number of points on it, corresponding to points in the audience can be calculated. The points obtained in this way will then automatically determine the size of the reflector.

3.0 DERIVATION OF ANALYTIC RELATIONS

3.1 Assumptions:

In order to simplify the problem to workable proportions, the following assumptions are made:

(i) The sound source is a point source emitting spherical sound waves.

(ii) The dimensions of the reflector are such that the sound of interest is reflected like an ordinary light beam off an optical reflector.

(iii) The time difference between direct and reflected sound should stay as constant as possible for the best results.

3.2 Requirements:

For a given source and a given target point in the audience area, all possible reflecting points must satisfy the following conditions:

(i) The tangent to the reflective surface at the point of reflection is such that the angle of incidence is equal to the exit angle.

(ii) To yield a constant time delay between reflected and direct sound, the path difference must be a constant.

(iii) To obtain a continuous curve of reflecting points for successive target points, each reflective point must be on a curve that is tangent to the locus of all possible reflecting points for each target point.

The first two conditions are met when all possible reflection points lie on an ellipsoid with the source and target points as the focal

points/.....

point. The third condition is met when the locus for possible reflection points for successive target points lie on the enveloping curve of the family of ellipsoids obtained for successive target points.

3.3 Practical considerations:

The third requirement mentioned above results in a curved reflector which is not considered desirable for the following reasons:

(i) Although the form and position of the reflector can be determined accurately, it would be costly to make and install.

(ii) If the time difference between direct and reflected sound varies within certain specified limits there is no appreciable difference in quality.

(iii) Adjustment of the direct to reverberant sound energy ratio would become impossible due to the complexity of the reflectors.

By allowing the time difference to vary within limits for any one specific reflector, the third requirement can be changed. The reflective points for successive target points can be forced to lie on a flat surface if desired. It was decided to adopt the flat surface approach in view of the tremendous simplification.

The resulting reflective surface can be tilted in two directions, but it was decided to tilt it in only one direction as this leads to more simplification and any point in the audience area can be reached via such a reflector.

3.4 Derivation of equations:

3.4.1 General considerations

It was decided to use cartesian co-ordinates with the centre of

the/.....

the stage as the origin as they are easy to measure and convenient to employ. The usual symbols x, y and z were chosen as shown in figure 1. The angle of tilt was restricted to the x-z plane.

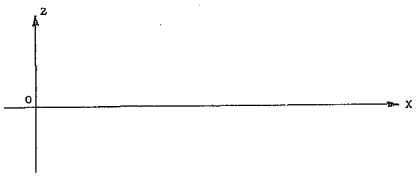

SIDE ELEVATION

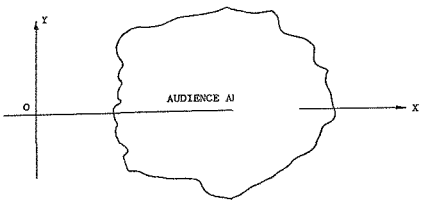

PLAN

FIGURE I

3.4.2 Definition/.....

3.4.2 Definition of symbols

The following symbols were used in the derivation:

ld - Path length difference between direct and reflected sound to observation point.
td - Time difference between arrival of direct and reflected sound at observation point.
us - Propagation velocity of sound in air.
p - Subscript to denote a point in the audience area.
s - Subscript to denote a point on the reflector.
m - Angle at which reflector is tilted.

3.4.3 Constant time difference approach

The defining equations for this approach are included only for the sake of completeness, but as mentioned earlier this approach was not employed.

By taking focal points of the ellipsoid on which all possible reflective points lie at the origin and as the 'target' point in the audience area, we have

$$(xs^2+ys^2+zs^2)^{\frac{1}{2}} + ((xs-xp)^2+(ys-yp)^2+(zs-zp)^2)^{\frac{1}{2}} = ld+(xp^2+zp^2+yp^2)^{\frac{1}{2}} \quad \ldots\ldots\ldots\ldots\ldots\ldots \quad (1$$

The possible target points lie in the audience are on a curve defined by the shape of the auditorium floor.

$$f(xp,yp,zp) = 0 \quad \ldots\ldots\ldots\ldots\ldots\ldots \quad (2$$

Equations (1) and (2) define a whole family of ellipsoids on which all possible reflective points lie. The desired reflective surface is however tangent to each member of the family. It can be shown[22] that the enclosing curve of such a family as: $f(x,y,z,\alpha,\beta)$ - with α and β the variable parameters, is found

from/.....

from

$\frac{\partial f}{\partial \alpha} = 0$ and

$\frac{\partial f}{\partial \beta} = 0$

From these equations it is possible to derive the equation describing the required reflector.

3.4.4 *Variable time delay approach*

The relevant equations for this case are:

$$(xs^2+ys^2+zs^2)^{\frac{1}{2}} + ((xs-yp)^2+(ys-yp)^2+(zs-zp)^2)^{\frac{1}{2}} = ld+(xp^2+zp^2+yp^2)^{\frac{1}{2}} \quad \ldots\ldots\ldots\ldots\ldots\ldots \quad (4$$

This equation defines the ellipsoid on which all possible reflective points lie.

By taking

$$\frac{\partial zs}{\partial xs} = m$$

in (4), we have:

$$\frac{(xs^2+ys^2+zs^2)^{\frac{1}{2}}}{((xs-xp)^2+(ys-yp)^2+(zs-zp)^2)^{\frac{1}{2}}} = \frac{\pm(xs+m.zs)}{(xs-xp)+m(zs-zp)} \quad \ldots\ldots\ldots\ldots \quad (5$$

This equation fixes the angle of the tangent at the point of reflection on the ellipsoid. *As mentioned earlier* the reflective surface is tilted only in one direction, therefore we take:

$\frac{\partial zs}{\partial ys} = 0$ in (4):

$$\frac{(xs^2+ys^2+zs^2)^{\frac{1}{2}}}{((xs-xp)^2+(ys-yp)^2+(zs-zp)^2)^{\frac{1}{2}}} = \frac{\pm ys}{ys-yp} \quad \ldots\ldots\ldots\ldots\ldots\ldots\ldots \quad (6$$

Equations/.....

Equations (4), (5) and (6) defines a point on the ellipsoid which conforms to all the requirements for reflection. It is interesting to note that the third derivative $(\frac{\partial^3 zs}{\partial xs^3})$ becomes infinite as it defines the slope of an infinitly small point in the x-y plane. The simultaneous solution of the abovementioned equations yields the co-ordinates of the first point on the plane. At this stage it becomes necessary to distinguish between three possibilities:

(i) m and td given.
(ii) zs and td given.
(iii) xs and td given.

3.4.4.1 With m and td specified

Solving (4), (5) and (6) with ld > 0, the following is found:

$$zs=xs\left\{\frac{(xp+m.zp)((k^2-yp^2)(m^2+1)-(xp+m.zp)^2)^{\frac{1}{2}}+m(k^2-yp^2)}{(xp+m.zp)^2-m^2(k^2-yp^2)}\right\} \quad \ldots \quad (7$$

where $k = ld+(xp^2+yp^2+zp^2)^{\frac{1}{2}}$

$$xs = \frac{k^2-(xp^2+yp^2+zp^2)}{2((k^2-yp^2)(1+k2^2))^{\frac{1}{2}}-(k2.zp+xp))}$$

$$= \frac{(1+m.k2)^2(xp^2+zp^2)-(1+k2^2)(xp+m.zp)^2}{2(1+m.k2)((xp+zp\ k2)(1+m.k2)-(xp+m.zp)(1+k^2))} \quad \ldots\ldots \quad (8$$

where $k2 = \frac{zs}{xs}$ .... from (7)

$$ys = \left\{\frac{yp(1+m.k2)}{(xp+m.zp)}\right\} xs = \left\{\frac{(k2^2+1)^{\frac{1}{2}}}{(k^2-yp^2)^{\frac{1}{2}}}\right\} yp.xs \quad \ldots\ldots\ldots\ldots \quad (9$$

Equations (7), (8) and (9) represent the solution for this case, but the validity of the solution for all values of the given parameters has to be examined.

By/.....

Since (a) gives a solution with the reflector above the audience, this solution is chosen.

As xp must be zero if R and m are, the solution for ys will become invalid if R = m = 0. This leads to the second special case:

(ii) R = 0, m = 0, xp = 0

$$xs = 0$$

$$ys = \frac{zs.yp}{(k^2-yp^2)^{\frac{1}{2}}}$$

$$A = zs$$

$$zs = .5\ (zp+(k^2-yp^2)^{\frac{1}{2}})$$

These different solutions were used in the writing of a subroutine named 'FIPAM' for the calculation of the first point on a reflector with m and td specified.

3.4.4.2 With zs and td specified

By taking zs = zv in (4), (5) and (6), we obtain:

$$\frac{ys}{yp} = \frac{xs+m.zv}{xs+m.xp} \qquad \ldots\ldots\ldots\ldots\ldots\ldots \quad (10)$$

$$\frac{(ys)^2}{(yp)^2} = \frac{xs^2+zv^2}{k^2-yp^2} \qquad \ldots\ldots\ldots\ldots\ldots\ldots \quad (11)$$

$$(xs^2+zv^2)(yp^2-2\ yp.ys)=ys^2\ (zp^2+xp^2-2(zv.zp+xs.xp)) \qquad \ldots\ldots \quad (12)$$

Solving/.....

Solving (10), (11) and (12) simultaneously for ys, xs and m:

$$xs = \frac{k1^2 \cdot xp^2((k^2-yp^2)(k1^4-4zv^2(k^2-(yp^2+xp^2)))^{\frac{1}{2}}}{2(k^2-(yp^2+xp^2))} \quad \ldots\ldots\ldots\ldots \quad (13$$

where $k1^2 = k^2-(xp^2+zp^2+yp^2)+2.zp.zv$

$$ys = \pm yp\frac{(xs^2+zv^2)^{\frac{1}{2}}}{(k^2-yp^2)^{\frac{1}{2}}} \quad \ldots\ldots\ldots\ldots \quad (14$$

$$m = \frac{xs-ys.xp}{ys.zp+xp.zv} \quad \ldots\ldots\ldots\ldots \quad (15$$

Equations (13), (14) and (15) represent a number of solutions under certain conditions. Further investigation shows which of them are applicable under what conditions:

(i) If $D = (k^2-yp^2)(k1^4-4zv^2(k^2-(yp^2+xp^2))) \geq 0$, a real solution for xs exists. It can be shown * that $D \geq 0$, if

$$.5(zp-(xp^2+1d^2+21d(xp^2+yp^2+zp^2)^{\frac{1}{2}})^{\frac{1}{2}}) \leq zv$$

$$.5(zp+(xp^2+1d^2+21d(xp^2+yp^2+zp^2)^{\frac{1}{2}})^{\frac{1}{2}}) \geq zv$$

This simply means that the height (zv) chosen for the reflector must touch or intersect the ellipsoid the chosen time delay (td).

(ii) Furthermore, the negative sign in (13) is applicable to a reflecting point closest to the source, yielding a positive m. This possibility was chosen for use in the subroutine as the negative sign yields a reflector far from the source at a negative angle which could lead to unnecessary constructional problems.

---

* Proof is given in Appendix II.

(iii) In (13), $Q = k^2-(yp^2+xp^2)$ can only be zero if ld and zp are zero.

(iv) The positive sign in (14) is chosen as it yields a ys of the same sign as yp which is the case of interest here.

(v) If $s = ys.zp.zs.yp = 0$ in (15), the reflective point lies on the line from the source to the target point (p), which is an impossibility.

(vi) If yp = 0, the problem reduces to the two-dimensional case:

$$ys = 0$$

$$zs = \frac{-zp((xv-xp)^2-k^2+zp^2-xv^2))+k((xv-sp)^2-k^2+zp^2-xv^2)^{\frac{1}{2}}}{2(k^2-zp^2)}$$

$$am = \frac{zsk-zp(zs^2+xv^2)^{\frac{1}{2}}}{xvk-xp(zs^2+xv^2)^{\frac{1}{2}}}$$

3.4.4.3 With xs and td specified

This case is mathematically identical to the previous one, as xs and zs are interchangeable. Therefore only the solution is given with comments where necessary.

Taking xs-xv in (4), (5) and (6) the solution follows:

$$zs = \frac{k3^2 zp \pm((k^2-yp^2)(k3^2-4xv^2(k^2-yp^2-zp^2)))^{\frac{1}{2}}}{2(k^2-yp^2-zp^2)} \quad \ldots\ldots\ldots (16$$

where $k3^2 = k^2-(xp^2+zp^2+yp^2)+2xp.xv$

$$ys = \pm yp\ \frac{(xv^2+zs^2)^{\frac{1}{2}}}{(k^2-yp^2)^{\frac{1}{2}}} \quad \ldots\ldots\ldots (17$$

m/.....

$$m = \frac{yp.xv - yv.xp}{ys.zp - zs.yp} \qquad \text{.....} \quad (18$$

(i) Equation (16) yields a real solution only if:

$$.5((\lambda p-(xp^2+ld^2+2ld(xp^2+yp^2+zp^2)^{\frac{1}{2}})^{\frac{1}{2}})^{\frac{1}{2}}) \leq xv$$

$$.5((xp+(\lambda \quad ld^2+2ld(xp^2+yp^2+zp^2)^{\frac{1}{2}})^{\frac{1}{2}})^{\frac{1}{2}}) \geq xv$$

(ii) The positive sign is chosen in (16) because this corresponds to a reflector above the audience level.

(iii) The positive sign is chosen in (17).

(iv) In (16) $F = k^2 - yp^2 - zp^2$ can only be zero if ld and zp are zero.

(v) If $G = ys.zp - zs.yp = 0$ in (18) the reflective point lies on the line from the source to the target point (p) which is an impossibility.

(vi) If $yp = 0$, the problem reduces to the two-dimensional case:

$$ys = 0$$

$$xs = \frac{-xp((zv-zp)^2-k^2+xp^2-zv^2))+k(((zv-zp)^2-k^2+xp^2-zv^2)^2}{2(k^2-xp^2)}$$

$$zm = \frac{xsk-xp(xs^2+zv^2)^{\frac{1}{2}}}{zvk-zp(xs^2+zv^2)^{\frac{1}{2}}}$$

3.4.4.4 Additional/.....

3.4.4.4 Additional points on the reflector

By using one of the previous methods, one point on and the angle of the reflector are defined, thereby fixing the position of a plane in space. Because the plane slopes in only one direction, it is definable only in the z-x plane. The equation describing this plane is then

$$zs = A + m \cdot xs \qquad \ldots\ldots\ldots\ldots\ldots\ldots \quad (19$$

By using the results from the calculation of the first point, the constants A and m are defined.

The other three applicable equations are:

(i) $$\frac{ys^2}{yp^2} = \frac{xs^2 + zs^2}{k^2 - yp^2} \qquad \ldots\ldots\ldots\ldots\ldots \quad (20$$

from (11) where :

$k\Omega = ld' + (xp^2 + yp^2 + zp^2)$ equals the new constant for the ellipsoid defined by:

$$(xs^2 + ys^2 + zs^2)^{\frac{1}{2}} + ((xs-xp)^2 + (ys-yp)^2 + (zs-zp)^2)^{\frac{1}{2}} = k\Omega$$
$$ld' + (xp^2 + yp^2 + zp^2) = k\Omega$$

Provided the new target point in the audience is not too far from the first one, the new difference in path length ld' will not differ significantly from ld.

(ii) $$\frac{ys}{yp} = \frac{xs + m\ zs}{xp + m\ zp} \qquad \ldots\ldots\ldots\ldots\ldots \quad (21$$

from (10).

(iii)/.....

(iii) $(xs^2+zs^2)(yp^2-2ys.yp)=ys^2(xp^2+zp^2-2(xs.xp+zs.zp))$ .. (22 from (11).

By solving these equations we obtain solutions for xs, ys, zs and ld:

$$xs = \frac{Axp}{zp-m.xp} \quad \text{or} \quad \frac{A}{m^2+1}\left\{\frac{xp+m.zp}{m.xp-zp+2A} - m\right\} \qquad \ldots\ldots\ldots (23$$

$$zs = A+m.xs \qquad \ldots\ldots\ldots\ldots (24$$

$$ys = \frac{(m^2+1)yp}{xp+m.zp}\,xs + \frac{m.A.yp}{xp+m.zp} \qquad \ldots\ldots\ldots\ldots (25$$

$$ld' = \frac{yp}{ys}\,(xs^2+zs^2+ys^2)^{\frac{1}{2}} - (xp^2+yp^2+zp^2)^{\frac{1}{2}} \qquad \ldots\ldots\ldots\ldots (26$$

The first possibility in (23) represents the intersection point between the reflective surface and the line from the origin to the target point (p). The second represents the 'true' reflective point which is used in the calculations. Three interesting cases can be considered:

(i) Target point below the reflective surface

The first solution represents the reflective path from the origin to the point of intersection with the reflective surface behind and below the origin. As this path coincides with the axis of the ellipsoid (0,0,0 to xp, yp, zp) for this case, the incident angle is 90 ° and the ray passes straight through to intersect with the reflective surface. From these considerations it is clear that this solution, although satisfying the original equations, is useless. The second solution giving the normal reflective path is therefore used in calculations.

(ii) Target/.....

(ii) Target point on the reflective surface

This is an invalid case as the time delay reduced to zero. The two solutions coincide as the target and reflective points is the same point.

(iii) Target point above the reflective surface

This is also an invalid case as the reflective path passes through the reflective surface.

To obtain useful solutions the target area should therefore be restricted to below the reflective surface. This restriction can be formulated as follows:

$$zp < A+m.xp \qquad \ldots\ldots\ldots\ldots\ldots \quad (23a$$

Inspection of the solutions show that no invalid solutions are obtained if this restriction is observed.

4. COMPUTER SUBROUTINES

4.1 Definition of Symbols:

In order to observe the normal Fortran IV rules the definition of symbols are changed as listed below:

AA = Reflective plane constant.
AM = Reflective plane angle.
P = Subscript denoting target point.
S = Subscript denoting reflective point.
US = Speed of sound.
TD = Time delay in milliseconds.
6 = Code used to denote printer.

4.2 Subroutine FIPAM:

The mnemonic FIPAM is derived from the word 'fixed point' and the angle of the reflector, AM. This subroutine caters for the case where AM and TD are specified for 'fixing' the first point on a reflector. Refer appendix III.

4.2.1 Flow diagram

The flow diagram is developed by making use of the normal symbols and the equations and restrictions as discussed previously. The symbols and descriptive clarification are self-explanatory which *renders further comments* superfluous.

4.2.2 Subroutine

The subroutine is developed from the flow diagram and can easily be followed with the use of the flow diagram.

4.3 Subroutine/.....

4. COMPUTER SUBROUTINES

4.1 Definition of Symbols:

In order to observe the normal Fortran IV rules the definition of symbols are changed as listed below:

AA = Reflective plane constant.
AM = Reflective plane angle.
P = Subscript denoting target point.
S = Subscript denoting reflective point.
US = Speed of sound.
TD = Time delay in milliseconds.
6 = Code used to denote printer.

4.2 Subroutine FIPAM:

The mnemonic FIPAM is derived from the word 'fixed point' and the angle of the reflector, AM. This subroutine caters for the case where AM and TD are specified for 'fixing' the first point on a reflector. Refer appendix III.

4.2.1 Flow diagram

The flow diagram is developed by making use of the normal symbols and the equations and restrictions as discussed previously. The symbols and descriptive clarification are self-explanatory which renders further comments superfluous.

4.2.2 Subroutine

The subroutine is developed from the flow diagram and can easily be followed with the use of the flow diagram.

4.3 Subroutine/.....

4.3 Subroutine FIPZV:

The mnemonic is derived from 'fixed point' and the specified reflective point co-ordinate 'ZV'. This subroutine should be used to find the first point on a reflector when its height and the time delay is known. The subroutine returns the angle of the reflector, the plane constant (AA) and the remaining co-ordinates (XS, YS) of the first point on the reflector. Refer appendix IV.

The flow diagram and subroutine programme is developed from the appropriate equations and restrictions and is very straightforward.

4.4 Subroutine FIPXV:

This case is essentially similar to the previous one, except that the distance of the first reflective point from the source is specified in place of the height above the source. Refer appendix V.

4.5 Subroutine ANYPT:

The mnemonic is derived from 'any point'. This subroutine is applied to find the co-ordinates of successive points on a reflector once the reflecting plane is fixed in space by the use of one of the previous subroutines. The co-ordinates of the reflective point are returned together with the time delay for the specific reflective and target points. The time delay is not directly controlled and the value obtained is returned, for inspection purposes to the designer. Refer appendix VI.

4.6 General considerations:

Whenever an invalid condition is encountered by any one of the subroutines, an explanatory print-out together with the input variables is given on a new line. At the same time the output values are set to zero and the subroutine returns to the calling program. If the designer wishes to change this procedure it can be done without much trouble by modifying the program at the appropriate branch points.

5. ILLUSTRATIVE EXAMPLES

5.1 General:

The purpose of this section is to indicate by way of two examples how some of the subroutines can be used in the design of reflective surfaces. The one example concerns a lecture hall and the other a performing arts theatre.

5.2 Design approach:

5.2.1 In order to facilitate the use of the subroutines, the following should be kept in mind:

(i) Since the source is always at the origin the co-ordinates used in the calculations have to be changed for a new source.

Let the new origin be $O_n(x_n, y_n, z_n)$, and P(x, y, z) be any point. The new co-ordinates for P are then:

$$x' = x - x_n$$
$$y' = y - y_n$$
$$z' = z - z_n$$

(ii) If the plane has been defined relative to one origin, the plane constant AA has to be changed for a new origin.

The new plane constant is: $AA' = AA + AM.X\ n - Zn$

5.2.2 The general procedure followed was as follows:

(i) A convenient height is chosen for the reflective point to the closest target point in the middle of the audience area.

(ii) Various time-delays are then tried using the subroutine FIPZV to get x_s to a reasonable position.

(iii) Once/.....

5. ILLUSTRATIVE EXAMPLES

5.1 General:

The purpose of this section is to indicate by way of two examples how some of the subroutines can be used in the design of reflective surfaces. The one example concerns a lecture hall and the other a performing arts theatre.

5.2 Design approach:

5.2.1 In order to facilitate the use of the subroutines, the following should be kept in mind:

(i) Since the source is always at the origin the co-ordinates used in the calculations have to be changed for a new source.

Let the new origin be $O_n(x_n, y_n, z_n)$, and P(x, y, z) be any point. The new co-ordinates for P are then:

$$x' = x - x_n$$
$$y' = y - y_n$$
$$z' = z - z_n$$

(ii) If the plane has been defined relative to one origin, the plane constant AA has to be changed for a new origin.

The new plane constant is: $AA' = AA + AN.X\ n - Zn$

5.2.2 The general procedure followed was as follows:

(i) A convenient height is chosen for the reflective point to the closest target point in the middle of the audience area.

(ii) Various time-delays are then tried using the subroutine FIPZV to get x_s to a reasonable position.

(iii) Once/.....

(iii) Once the first reflective plane is fixed the size of the reflector is calculated by using subroutine ANYPT and moving the source if necessary for the application.

(iv) This procedure is then repeated for as many reflectors as desired.

The various call ng programmes used are listed in appendix VII.

5.3 Senate room:

The origin was chosen at the lecturer position, and the resulting co-ordinates resembling the audience area are given in table I. Figure I shows a top view of the audience area, with points marked A to D. These points were used as alternate sources to test the reflection off the reflectors from various positions. The results obtained are summarised in Figures II to V.

The sizes chosen for the reflectors represent the best compromise thought possible, and gives maximum overall coverage from the various points.

A sample of the output obtained from the computer is shown in table II. These figures are those corresponding to the original origin and the first reflector

TABLE I

XP	YP	ZP
0	5	-0,7
4,1	2,4	-0,7
4,1	0	-0,7
4,1	-2,4	-0,7
0	-5	-0,7
5,5	14,5	0,8
16	9	0,8
16	0	0,8
16	-9	0,8
5,5	-14,5	0,8

TABLE II/.....

FIGURE I

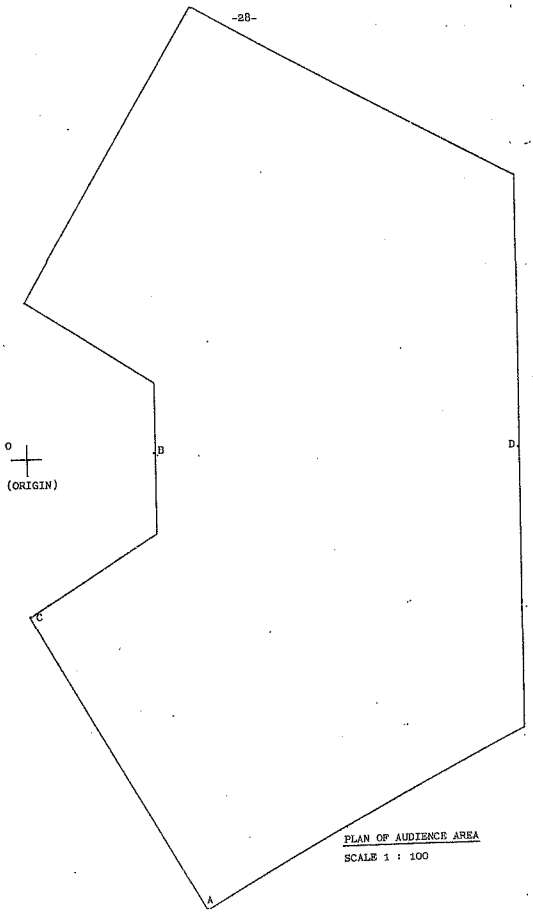

PLAN OF AUDIENCE AREA
SCALE 1 : 100

FIGURE II

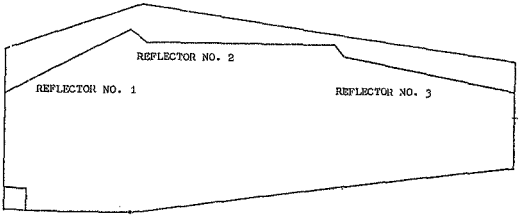

SIDE ELEVATION

SCALE 1 : 100

FIGURE III

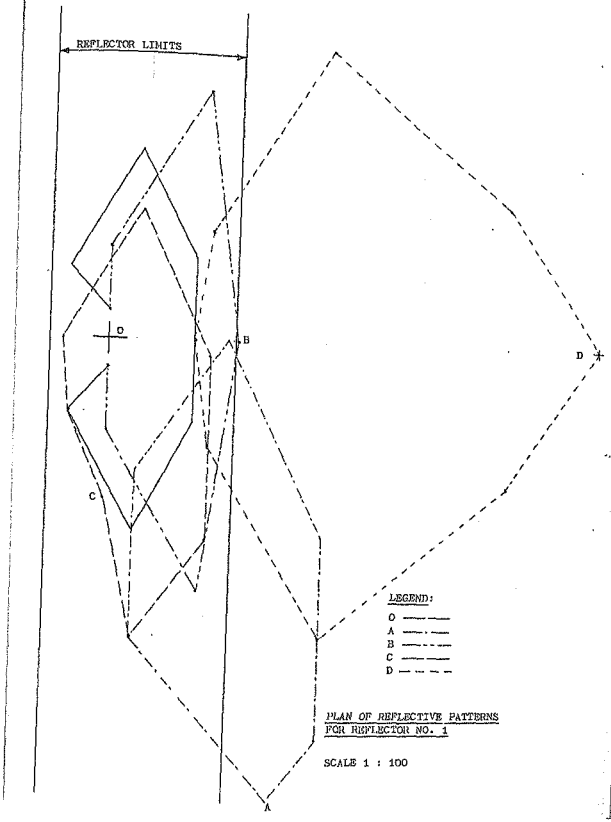

PLAN OF REFLECTIVE PATTERNS FOR REFLECTOR NO. 1

SCALE 1 : 100

FIGURE III

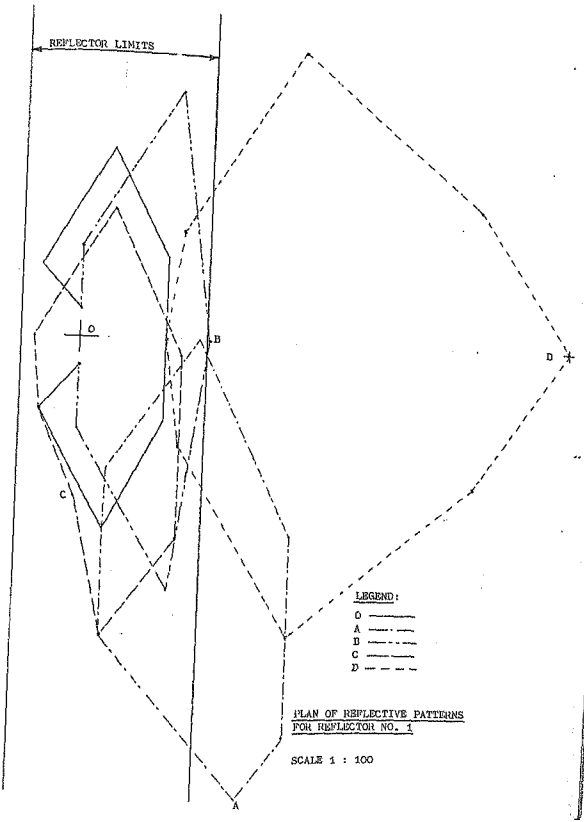

PLAN OF REFLECTIVE PATTERNS FOR REFLECTOR NO. 1

SCALE 1 : 100

FIGURE IV

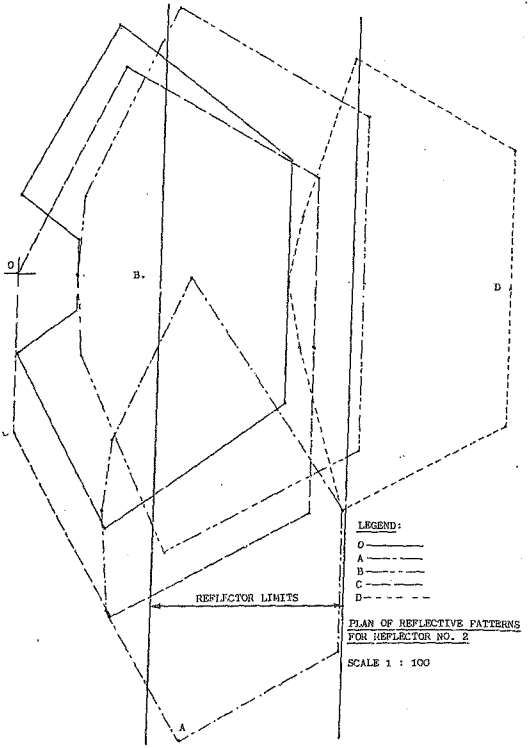

PLAN OF REFLECTIVE PATTERNS FOR REFLECTOR NO. 2

SCALE 1 : 100

FIGURE V

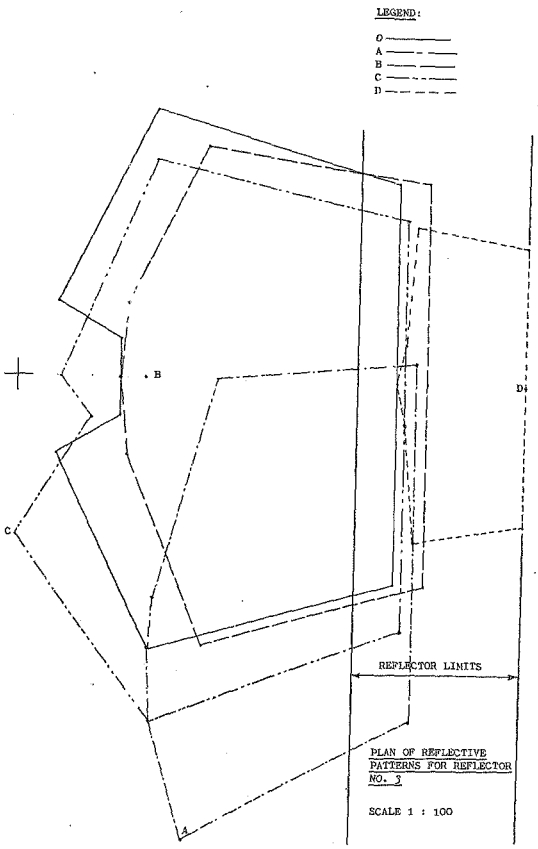

PLAN OF REFLECTIVE PATTERNS FOR REFLECTOR NO. 3

SCALE 1 : 100

TABLE II

TD	XS	YS	ZS	XP	YP	ZP
.0115	-1.33	2.28	3.00	0.	5.00	-.70
.0150	.04	.91	3.62	4.10	2.40	-.70
.0161	.04	0.	3.62	4.10	0.	-.70
.0150	.04	-.91	3.62	4.10	-2.40	-.70
.0115	-1.33	-2.28	3.00	0.	-5.00	-.70
.0056	.91	6.11	3.95	5.50	14.50	.80
.0085	2.81	2.56	4.70	16.00	9.00	.80
.0096	2.81	0.	4.70	16.00	0.	.80
.0085	2.81	-2.56	4.70	16.00	-9.00	.80
.0056	.91	-6.11	3.95	5.50	-14.50	.80

5.4 Gwelo Civic Theatre:

This case differs from the previous one in that there is a proper stage and an orchestra pit. It was thought that the only two significant points would be the centre of the stage and the orchestra pit. In the design only these two points were considered as sound sources.

Very early in the design process it became evident that it would not be possible to design a practical reflector system giving good coverage of the audience area from the centre of the stage, without using a rigid

stage /.....

stage enclosure. All practical reflectors extend to beyond the curtain into the stage area for coverage of the front half of the audience. This is not allowable because decor handling and stage lighting has to make use of this area.

It was therefore decided to concentrate on getting good coverage from the orchestra pit source point and rely on a stage enclosure for the stage itself.

The set of co-ordinates for the centre stage origin are given in Table III and the results are summarised in figures VI to IX.

TABLE III

XP	YP	ZP
9,10	6,0	-1,9
9,10	-6,0	-1,9
13,10	7,30	-1,0
13,10	-7,30	-1,0
22,8	7,30	1,1
22,8	-7,30	1,1

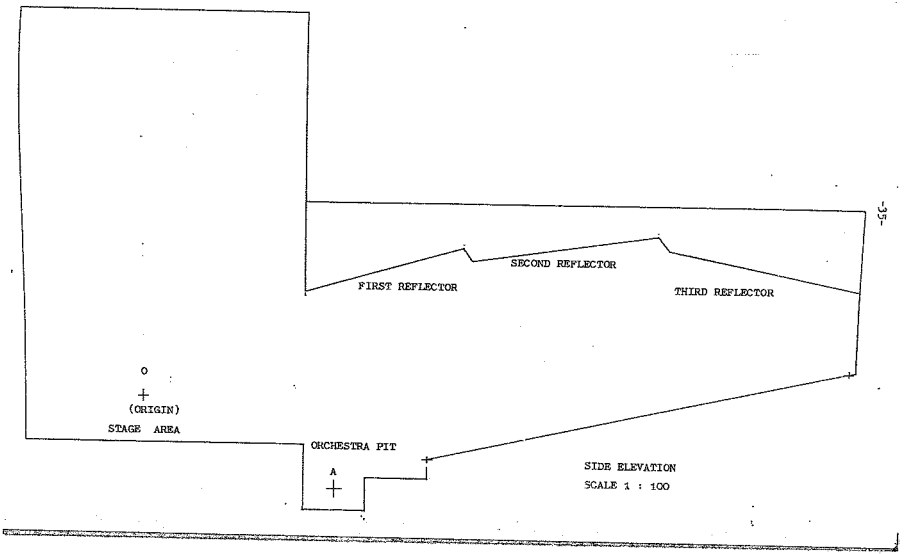
SECOND REFLECTOR
FIRST REFLECTOR
THIRD REFLECTOR
O
(ORIGIN)
STAGE AREA
ORCHESTRA PIT
A
SIDE ELEVATION
SCALE 1 : 100

FIGURE VII

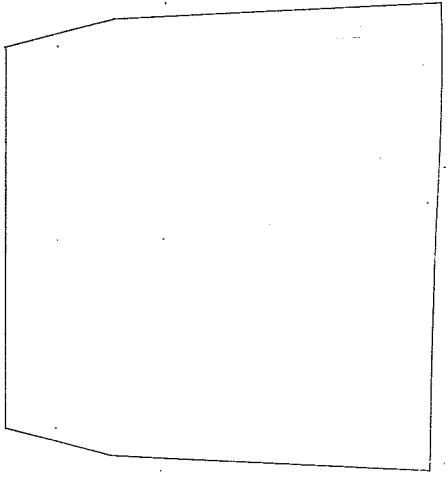

PLAN OF AUDIENCE AREA
SCALE 1 : 100

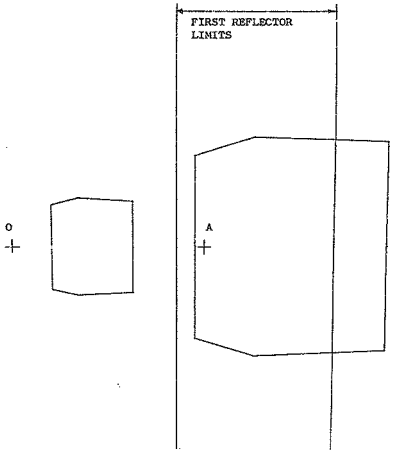

PLAN OF REFLECTIVE PATTERNS FOR
FIRST REFLECTOP

SCALE 1 : 100

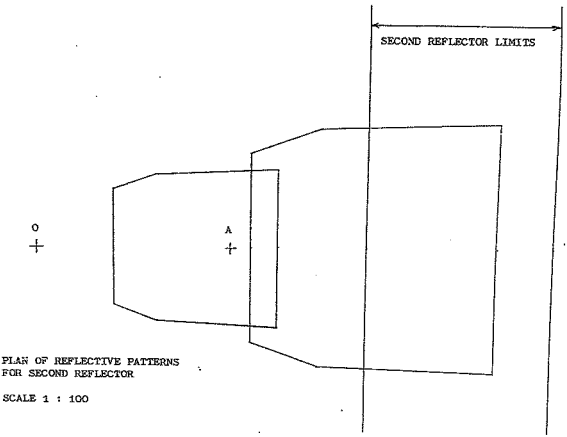

PLAN OF REFLECTIVE PATTERNS
FOR SECOND REFLECTOR

SCALE 1 : 100

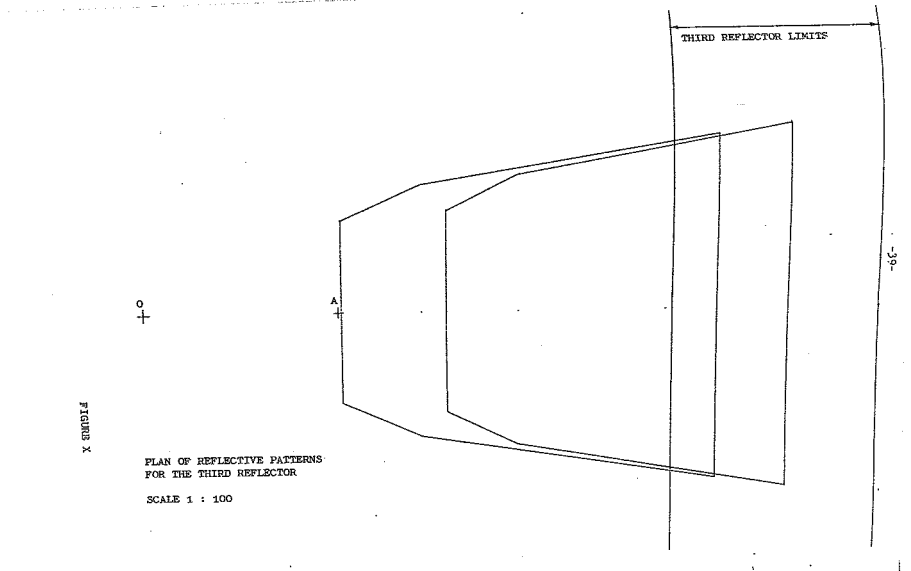

PLAN OF REFLECTIVE PATTERNS
FOR THE THIRD REFLECTOR

SCALE 1 : 100

6.0 CONCLUSIONS

The subroutines developed have proven to be useful in the iterative process of designing reflectors for auditoria because of the ease with which they can be used.

One point which was immediately obvious was the many combinations in which the subroutines could be used in the design process. It would seem that the most useful combinations will only become evident after a considerable amount of experience.

It was pointed out by Beranek in an article [24] that flat reflectors give rise to a "rasping" sound, whereas more diffused reflections give a more desirable sound quality. Further research could possibly indicate how diffuse reflectors can be married to the approach put forward in this paper.

REFERENCES

1. Beranek, L.L. Music, Acoustics and Architechture; New York: John Wiley and Sons, 1962.

2. Jäger, S. 'Zur Theorie des Nachalls' Sitzungsber. Akad. Wiss. Wien IIa, 120: 613, 1911.

3. Sabine, W.C. Collected papers on Acoustics; Cambridge Mass.: Harvard University Press. 43-45, 1923.

4. Norris, R.F. 'A new reverberation formula'. *Published in appendix II of* Knudson V.O. Architechtural Acoustics; New York: John Wiley & Sons, 1932.

5. Waetszmann, E. and Schuster, K. in Müller-Pauillet, Lehrbuch der Physik; 11, Brannschweig, 1926 IV.

6. Sette, W.J. 'A new reverberation formula' J. Acoust. Soc. Amer., 4: 193, 1932.

7. Bolt R.H., Doak, P.E., Westerfeld, P.J. 'Pulse statistics analysis of room acoustics'. J. Acoust, Soc. Amer., 4 no. 3: 328-340, 1950.

8. Kuttruff, H. 'Eigenschaften und auswertung von Nachallkurven' Acustica, 8 : 273-280, 1958.

9. Beranek, L.L. 'Audience and Seat Absorption in large Halls' J. Acoust. Soc. Amer., 32 no. 6: 661-670, 1960.

10. Schroeder, M.R. 'A new method of measuring reverberation time' J. Acoust. Soc. Amer., 37 no. 3: 409-412, 1965.

11. Kuttruff, H. Jusofic, M.J. 'Letters to the Editor'. Acustica, 19: 56-58, 1967-68.

12. Brillouin, J. 'Sur L'acoustique des salles' Rev. d'Acoustique, 1: September/November, 1932.

13. Knudson, V.O., Harris, C.L. 'Acoustic l designing in architecture' New York: John Wiley & Sons, 1950.

14. Beranek, L.L. Schultz, T.J. 'Design of concert halls'. Acustica, 15: 307-316, 1965.

15. Schultz, T.J. Watters, B.G. 'Propagation of sound across audience seating'. J. Acoust. Soc. Amer., 36 no. 5: 885-869, May 1964.

16. Sessler, G.M., West, J.E. J. Acoust. Soc. Amer., 36: 1725, 1964

17. Marshall, A.H. 'Levels of reflection Masking in Concert Halls'. Journal of Sound and Vibration, 7 no. 1: 116-118, 1968.

18. Schubert, P. 'Untersuchung über die Wahrnehmbarkeit von Einzelwürfen bei Musik' Technische Mitteilungen RFZ3: 124, 1966.

19. Beranek, L.L. 'Revised criteria for noise in buildings' Noise Control, 3 no. 1: 19, 1957.

20. Cavanaugh, W.J. 'The school auditorium' Sound, 2 no. 1: 19-27, Jan/Feb 1963.

21. Johnson, R. 'Auditorium acoustics for music performance' Architechtural Record, 158-165 and 184, Dec. 1960.

22. Wiener, F.M. 'On the relation between sound fields radiated and diffracted by plane obstacles' J. Acoust. Soc. Amer., 23: 697-700, 1951.

23. Granville, Smith and Longley. Elements of differential and integral calculus; London: Ginn and Company, 1958.

24. Beranek, Leo L., 'Acoustics and the concert hall'. J. Acoust. Soc. Amer., 57, no. 6, Part 1: 1258-1262, 1975.

25. von Békésy, Georg. 'Auditory Backward Inhibition in Concert Halls.' Science, 171 no. 3971: 529-536, Feb. 1971.

APPENDIX I

This appendix applies to the case where m and td are specified.

(i) In equation 7) we have :

$$D = (k^2 - yp^2)(m^2 + 1) - (xp + m \cdot zp)^2$$

Expressing D as a function of m, the following is obtained:

$$f(m) = m^2(k^2 - yp^2 - zp^2) - m(2xpzp) + k^2 - yp^2 - xp^2$$

The discriminant of this equation is:

$$\Delta = -4((k^2 - yp^2)(k^2 - (xp^2 + yp^2 + zp^2)))$$

Inspection reveals that $\Delta < 0$ *for* $ld > 0$, *i.e. the equation f(m) has no real roots.* Setting $f(m) = 0$, we find:

$$m = \frac{xpzp}{k^2 - (yp^2 + zp^2)} \qquad \text{and } f(m)_0 = \frac{(k^2 - yp^2)(k^2 - (xp^2 + zp^2 + yp^2))}{k^2 - (yp^2 + zp^2)}$$

Since $f(m)_0 > 0$ for $ld > 0$; is always positive.

(ii) In equation 8) we have:

$$Q = (1 + mk_2)((xp + zpk_2)(1 + mk_2) - (xp + mzp)(1 + k_2^2))$$

The second term can be expressed as:

$$f(k_2) = k_2^2(-xp) + k_2(m\,xp + zp) - mzp$$

The discriminant of this equation is:

$$\Delta = (mxp - zp)^2$$

This is always positive and the roots of $f(k_2)$ lie at:

$$k_2 = zp/xp \text{ or } m$$

The solution for x5 becomes undefined whenever $Q = 0$. This occurs when

$$k_2 = zp/xp) \; m \text{ or } \frac{1}{m}$$

(a) $k_2 = zp/xp$
$zs = zp/xp \cdot xs$ ..... from 7)

This is ruled out when $ld > 0$; because zs and xs must lie on the line from 0) to (P), in which case $ld = 0$.

(b) $k_2 = m$
$zs = mxs$
$A = 0$, $ld = 0$

This case is also ruled out when $ld > 0$

(c).../2

(c) $k_2 = -\frac{1}{m}$

$$z_s = -\frac{1}{m} x_s$$

$$A = 0$$

This is only possible when $x_s = z_s = 0$; in which case x_s ans z_s lie on the line from (O) to (P). This in turn leads to $l_d = 0$. Thus this condition can never occur if $l_d > 0$.

APPENDIX II

This applies to the case where zs = zv and td is specified. Since the case where xv and td are specified is mathematically identical, the discussion also applies to that case.

In equation 13) we have

$$D = (k^2 - yp^2)(k_1^4 - 4zv^2(k2 - (yp^2 + xp^2)))$$

Substituting the value of k_1 and simplifying, the following is found:

$$D = (k^2 - yp^2)(k^3 - (xp^2 + yp^2 + zp^2))(k^3 - 4zv\ (zv - zp) - (yp^2 + xp^2 + zp^2))$$

The first two terms will be larger than zero for $1d > 0$, therefore the sign of D will be determined by the last term.

Expressing to the last term as a function of zv:

$$\begin{aligned} f(zv) &= k^3 - 4zv(zv - zp) - (yp^2 + xp^2 + zp^2) \\ &= -4zv^2 + 4zvzp + 1d^2 + 21d\ (xp^2 + yp^2 + zp^2)^{\frac{1}{2}} \end{aligned}$$

Setting $f(zv) = 0$, the coördinates of the turning point are found:

$$zv = -\ zp/2,\quad f(zv)_o = zp^2 + 1d^2 + 21d\ (xp^2 + zp^2 + yp^2)^{\frac{1}{2}}$$

Thus $f(zv)_o$ is always positive.
The roots of f(zv) lie at:

$$zv = (4zp \pm (zp^2 + 1d^2 + 21d\ (xp^2 + yp^2 + zp^2)^{\frac{1}{2}})^{\frac{1}{2}})/-8$$

If zv lies between these two limits f(zv) will be positive or zero; i.e., if

$$Zp \geq .5(zp - (zp^2 + 1d^2 + 21d(xp^2 + yp^2 + zp^2)^{\frac{1}{2}})^{\frac{1}{2}})$$

$$Zp \leq .5(zp + (zp^2 + 1d^2 + 21d(xp^2 + yp^2 + zp^2)^{\frac{1}{2}})^{\frac{1}{2}})$$

then $f(zv) \geq 0$.

APPENDIX III

1.0 FLOW DIAGRAM FOR FIPAM

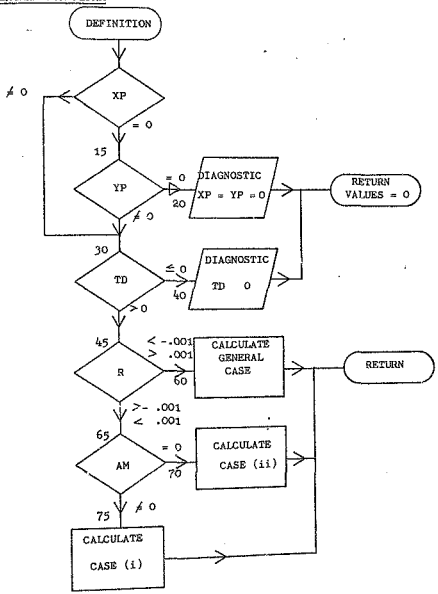

2.0 SUBROUTINE FIPAM

```
      %     SUBROUTINE FOR CALCULATING A FIXED POINT ON THE REFLECT
OR,GIVEN AM
    2           SUBROUTINE FIPAM (XP,YP,ZP,AM,US,TD,XS,YS,ZS,AA)
    3           IF(XP)32,15,32
    4        15 IF(YP)31,20,30
    5        20 WRITE(6,21)
    6        21 FORMAT(/T10,'SENSELESS REQUEST,XP=YP=0')
    7        25 XP=0
    8           YP=0
    9           ZP=0
   10           AA=0
   11           RETURN
   12        30 IF(TD)40,42,55
   13        40 WRITE(6,41)TD
   14        41 FORMAT(/T10,'SENSELESS REQUEST,TIME DELAY=',F6.4)
   15           GO TO 25
   16        55 ALD=US*TD
   17           CAL1=XP**2+YP**2+ZP**2
   18           AK=ALD+SQRT(CAL1)
   19           AR=XP+AM*ZP
   20           Q=AR**2-AM**2*(AK**2-YP**2)
   21      S=SQRT(Q**2)
   22      IF(S-.001)60,60,62
   23        60 CAL2=AK**2-YP**2
   24      AK2=(AR+SQRT(CAL2*(AM**2+1.)-AR**2)+AM*CAL2)/B
   25        XS=(AK**2-CAL1)/(2.*(SQRT(CAL2*(1.+AK2**2))-AK2*ZP-XP))
   26      ZS=AK2*XS
   27      YS=YP*XS*(1.+AM*AK2)/AR
   28           AA=ZS-AM*XS
   29           RETURN
   30        62 IF(AM)75,71,75
   31        71 CAL3=SQRT(AK**2-YP**2)
   32           XS=0
   33           ZS=.5*(ZP+CAL3)
   34           YS=ZS*YP/CAL3
   35           AA=ZS
   36           RETURN
   37        75 CAL2=(XP*(1.-AM**2)+2.*AM*ZP)/2.
   38           XS=0
   39           YS=YP*CAL2/(XP+AM*ZP)
   40           ZS=CAL2/AM
   41           AA=ZS
   42           RETURN
   43           END
```

APPENDIX IV

FLOW DIAGRAM FOR FIPZV

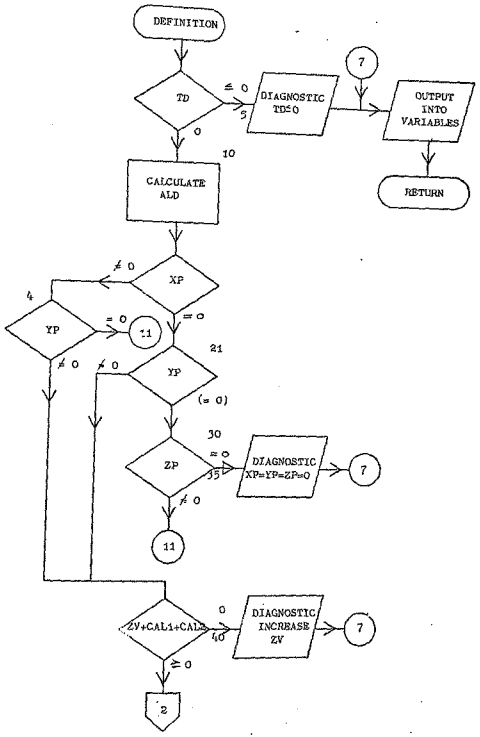

APPENDIX IV

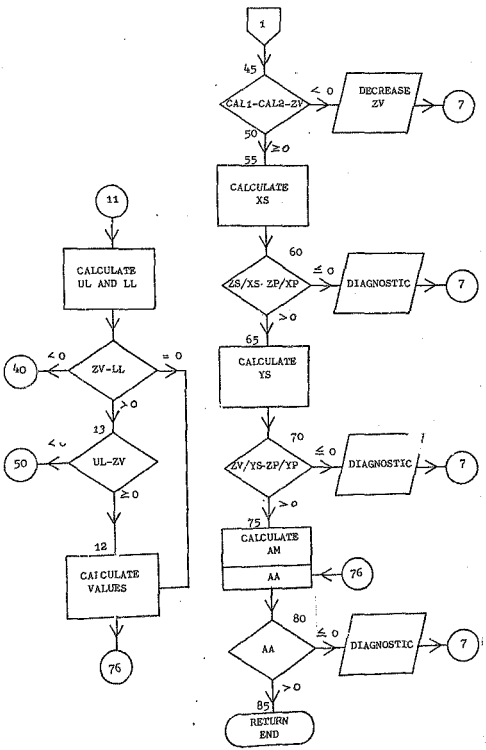
1
45
CAL1-CAL2-ZV
< 0
DECREASE ZV
7
50
≥ 0
55
CALCULATE XS
60
ZS/XS- ZP/XP
≤ 0
DIAGNOSTIC
7
> 0
65
CALCULATE YS
70
ZV/YS-ZP/YP
≤ 0
DIAGNOSTIC
7
> 0
75
CALCULATE AM
AA
76
80
AA
≤ 0
DIAGNOSTIC
7
> 0
85
RETURN END
11
CALCULATE UL AND LL
40
< 0
ZV-LL
= 0
> 0
13
50
< 0
UL-ZV
≥ 0
12
CAICULATE VALUES
76

2.0 SUBROUTINE FIPZV

```
!EDIT,UPDATE FIPZVP
!L
    1       %SUBROUTINE FOR CALCULATING A POINT ON THE REFLECTOR,GIVEN ZV
*
    2       SUBROUTINE FIPZV(XP,YP,ZP,AA,US,TC,XS,YS,ZV,AA)
    3       IF (TD)5,5,11
    4       5%WRITE(6,6)
    5       6FORMAT(/T12,'ZERO TIME DIFFERENCE')
    6       7%WRITE(6,8)US,TC,XP,YP,ZP,ZV
    7       8FORMAT(T13,'US',T25,'TC',T37,'XP',T49,'YP',T61,'ZP',T73,'ZV'
/T10,F9.4,T23,F8.4,T35,F8.4,T47,F8.4,T59,F8.4,T71,F8.4/)
    8       XS=0
    9       YS=0
   10       AA=0
   11       AA=2
   12       RETURN
   13       11ALD=TD*US
   14       IF(XP)4,21,4
   15       21IF(YP)2%,3%,2%
   16       3%IF(ZP)11,35,11
   17       35%RITE(6,36)
   18       36FORMAT(/T10,'THIS POINT LIES AT THE SOURCE ')
   19       GO TO 7
   20       2%CAL1=.5*(SQRT(ZP**2+ALD**2+2.*ALD*SQRT(XP**2+YP**2+ZP**2)))

   21       CAL2=.5*ZP
   22       IF(ZV+CAL1+CAL2)4%,45,45
   23       4%%RITE(6,41)
   24       41FORMAT(/T12,'THE VALUE OF ZV MUST BE INCREASED TO OBTAIN A
SOLUTION')
   25       GO TO 7
   26       45IF(CAL1-CAL2-ZV)5%,55,55
   27       5%%RITE(6,51)
   28       51FORMAT(/T12,'THE VALUE OF ZV MUST BE DECREASED TO OBTAIN A
SOLUTION')
   29       GO TO 7
   3%       55CAL3=XP**2+YP**2+ZP**2
   31       CAL4=(ALD+SQRT(CAL3))**2
   32       CAL5=CAL4-CAL3+2.*ZV*ZP
   33       XS=(XP*CAL5+SQRT((CAL4-YP**2)*(CAL5**2-4.*ZV**2*(CAL4-YP**2-X
P**2))))/(2.*(CAL4%
   34       -YP**2-XP**2))
   35       IF(ZV/XS-ZP/XP)6%,6%,65
   36       6%%RITE(6,61)XS
   37       61FORMAT(/T12,'THE POINT OF REFLECTION LIES ON OR BELOW THE L
INE FORM THE %
   38       ORIGIN TO (XP,ZP) IN THE X-Z PLANE.INCREASE ZV TO OBTAIN A SO
LUTION,'/T15,%
   39       'XS=',F8.4)
   4%       GO TO 7
   41       65YS=YP*SQRT((XS**2+ZV**2)/(CAL4-YP**2))
   42       CAL6=ZV/YS ZP/YP
   43       IF(CAL6)7%,7%,75
   44       7%%RITE(6,71)XS,YS
   45       71FORMAT(/T10,'THE POINT OF REFLECTION LIES ON OR BELOW THE L
INE FROM THE SOURCE TO'/%
   46       T1%,' (ZP,YP) IN THE Y-Z PLANE. TO OBTAIN A VALID SOLUTION IN
CREASE ZV.'/%
   47       T15,'XS=',F8.4,T24,'YS=',F8.4)
   48       GO TO 7
```

SUBROUTINE FIPZV (Cont'd)

```
      75AM=(YP*XS-YS*XP)/(YS*ZP-ZV*YP)
      76AA=ZV-AM*XS
      IF(AA)82,82,85
      80WRITE(6,81)XS,YS,AM,AA
      81FORMAT(/T12,'THE ANGLE BETWEEN THE REFLECTING PLANE AND THE
LINE FROM THE SOURCE'/%
     T10,' TO (XP,ZP) IS NEGATIVE. THE RESULT IS SENSELESS. TO OBT
AIN A SOLUTION,'/T10,%
     'INCREASE ZV.'/T12,'XS',T26,'AM',T34,'AA'/T8,F8.4,T16,F8.4,T2
4,F8.4,T32,F8.4)
      GO TO 7
      85RETURN
      11YS=0
      AK=ALO+SQRT(XP**2+ZP**2)
      ALL=.5*(ZP-SQRT(AK**2-XP**2))
      AUL=.5*(ZP+SQRT(AK**2-XP**2))
      IF(ZV-ALL)12,12,13
      13IF(AUL-ZV)50,12,12
      12AB=AK**2-XP**2
      CAL=(ZV-ZP)**2-AB-ZV**2
      XS=(-XP*CAL+AK*SQRT(CAL**2-4.*AB*ZV**2))/(2.*AB)
      CAL1=SQRT(XS**2+ZV**2)
      IF(ZV/XS-ZP/XP)14,14,15
      14WRITE(6,16)XS
      16FORMAT(/T10,'THE REFLECTIVE POINT LIES ON OR BELOW THE LINE
FROM THE SOURCE %
     TO (ZP,XP) IN THE Z,X PLANE. INCREASE ZV TO OBTAIN A SOLUTION
. XS=',F8.4)
      GO TO 7
      15AM=-(XS*AK-XP*CAL1)/(ZV*AK-ZP*CAL1)
      GO TO 76
      END
$D
SRU'S:1.0
```

APPENDIX V

1.0 FLOW DIAGRAM FOR FIPXV

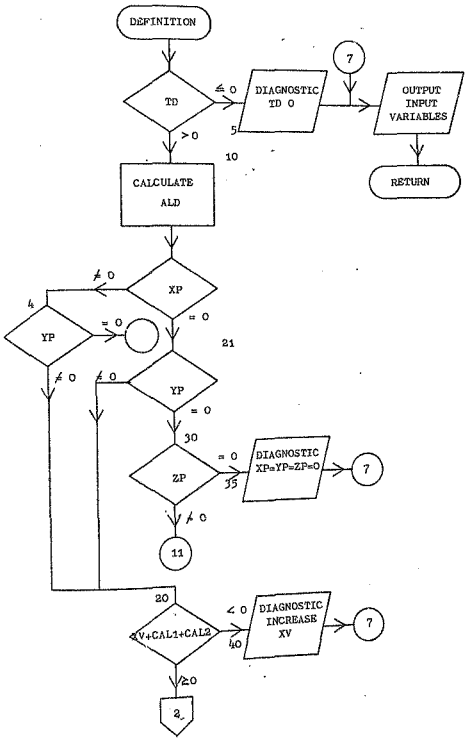

APPENDIX V

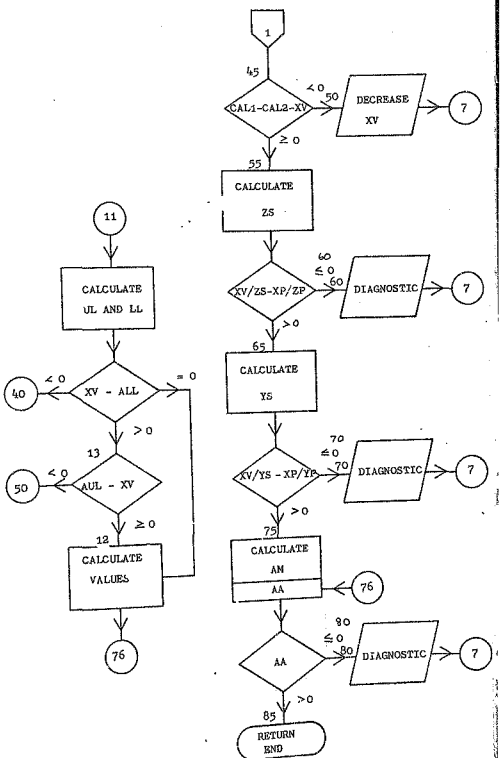
1
45
CAL1-CAL2-XV
< 0
50
DECREASE XV
7
≥ 0
55
CALCULATE ZS
60
≤ 0
XV/ZS-XP/ZP
60
DIAGNOSTIC
7
> 0
65
CALCULATE YS
70
≤ 0
XV/YS - XP/YP
70
DIAGNOSTIC
7
> 0
75
CALCULATE AM
AA
76
80
≤ 0
AA
80
DIAGNOSTIC
7
> 0
85
RETURN
END
11
CALCULATE UL AND LL
40
< 0
XV - ALL
= 0
> 0
13
50
< 0
AUL - XV
≥ 0
12
CALCULATE VALUES
76

2.0 SUBROUTINE FIPXV

```
      SUBROUTINE FIPXV FOR CALCULATING A POINT ON THE REFLECTOR GIVEN XV
      SUBROUTINE FIPXV(XP,YP,ZP,AM,US,TD,XV,YS,ZS,AA)
      IF(TD)5,5,10
    5 WRITE(6,6)
    6 FORMAT(/T10,'THE TIME DIFFERENCE IS ZERO OR NEGATIVE WHICH I
S SENSELESS')
      WRITE(6,7)XP,YP,ZP,XV,US,TD
    7 FORMAT(T13,'XP',T24,'YP',T36,'ZP',T48,'XV',T61,'US',T73,'TD'
/T11,F8.4,5
     1T22,F8.4,T36,F8.4,T48,F8.4,T59,F9.4,T71,F8.4)
      YS=0
      ZS=0
      AA=2
      AM=0
      RETURN
   10 CAL2=TD*US
      IF(XP)15,21,4
    4 IF(YP)20,30,20
   20 IF(ZP)11,35,11
   35 WRITE(6,36)
   36 FORMAT(/T10,'THIS POINT LIES AT THE SOURCE')
      GO TO 7
   21 CAL1=.5*SQRT(XP**2+ALO**2+2.*ALO*SQRT(XP**2+YP**2+ZP**2))

      CAL2=.5*XP
      IF(XV+CAL1+CAL2)40,45,45
   40 WRITE(6,41)
   41 FORMAT(/T10 , TO OBTAIN A SOLUTION THE VALUE OF XV MUST BE I
NCREASED')
      GO TO 7
   45 IF(CAL1-CAL2-XV)54,55,55
   54 WRITE(6,51)
   51 FORMAT(/T10,'THE VALUE OF XV MUST BE DECREASED TO OBTAIN A
SOLUTION')
      GO TO 7
   55 CAL5=(ALO+SQRT(XP**2+YP**2+ZP**2))**2
      CAL6=CAL5-XP**2-YP**2-ZP**2+2.*XP*XV
      ZS=(CAL6*ZP+SQRT((CAL5-YP**2)*(CAL6**2-4.*XV**2*(CAL5-YP**2-Z
P**2))))/(2.*(CAL5-
     1YP**2-ZP**2))
      IF(XV/ZS-XP/ZP)60,60,65
   60 WRITE(6,61)ZS
   61 FORMAT(/T10,'THE REFLECTIVE POINT LIES ON OR BELOW THE LINE
FROM THE SOURCE TO'/5
     1T12,'(ZP,XP) IN THE Z-X PLANE. TO OBTAIN A SOLUTION,DECREASE
XV.'/T15,'ZS=',F8.4)
      GO TO 7
   65 YS=YP*SQRT((XV**2+ZS**2)/(CAL5-YP**2))
      IF(XV/YS-XP/YP)70,72,75
   72 WRITE(6,71)ZS,YS
   71 FORMAT(/T10,'THE REFLECTIVE POINT LIES ON OR BELOW THE LINE
FROM THE'/5
     1T12,'SOURCE TO (XP,YP) IN THE XY PLANE.INCREASE THE VALUE OF
XV TO OBTAIN'/5
     1T12,'A SOLUTION.ZS= ',F8.4,' YS= ',F8.4)
      GO TO 7
```

SUBROUTINE FIFXV (Cont'd)

```
      75AM=(YP*XV-YS*XP)/(YS*ZP-ZS*YP)
      76AA=ZS-AM*XV
      IF(AA)80,80,85
      80WRITE(6,81)ZS,YS,AM,AA
      81FORMAT(/T12,'THE PLANE CONSTANT IS ZERO OR NEGATIVE, YIELDI
NG A SENSELESS %
      2RESULT. DECREASE XV TO OBTAIN A SOLUTION'/T15,'ZS',T23,'YS',T
31,'M',T39,'A'/T13%
      ,F8.4,T21,F8.4,T29,F8.4,T37,F8.4)
      GO TO 7
      85RETURN
      11YS=0
      AK=ALD+SQRT(XP**2+ZP**2)
      ALL=.5*(XP-SQRT(AK**2-ZP**2))
      AUL=.5*(XP+SQRT(AK**2-ZP**2))
      IF(XV-ALL)4?,12,13
      13IF(AUL-XV)5?,12,12
      12AR=AK**2-ZP**2
      CAL=(XV-XP)**2-AR-XV**2
      ZS=(-ZP*CAL+AK*SQRT(CAL**2-4.*AR*XV**2))/(2.*AR)
      CAL1=SQRT(ZS**2+XV**2)
      IF(XV/ZS-XP/ZP)14,14,15
      14WRITE(6,16)ZS
      16FORMAT(/T12,'THE REFLECTIVE POINT LIES ON OR BELOW THE LINE
 FROM THE SOURCE'/%
      T12,'(ZP,XP) IN THE Z-X PLANE. INCREASE XV TO OBTAIN A SOLUTI
ON.'/T12,'ZS= ',F8.4)
      GO TO 7
      15AM=-(XV*AK-XP*CAL1)/(ZS*AK-ZP*CAL1)
      GO TO 76
      END
```

APPENDIX VI

1.0 FLOW DIAGRAM FOR ANYPT

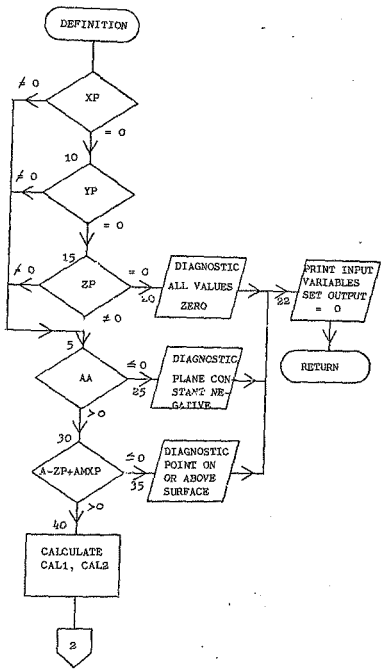

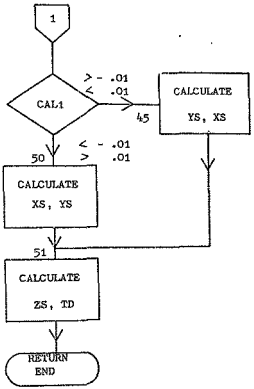
1
CAL1
> - .01
< .01
45
CALCULATE
YS, XS
50
< - .01
> .01
CALCULATE
XS, YS
51
CALCULATE
ZS, TD
RETURN
END

2.0 SUBROUTINE ANYPT

```
!EDIT,UPDATE ANYPTP
!L
    1       %PROGRAM FOR CALCULATING FURTHER POINTS ON A DEFINED PLANE

    2       SUBROUTINE ANYPT(XP,YP,ZP,AM,US,TO,XS,YS,ZS,AA)
    3       IF(XP)5,10,5
    4       10IF(YP)5,15,5
    5       15IF(ZP)5,20,5
    6       20WRITE(6,21)
    7       21FORMAT(/T10,'THIS POINT LIES AT THE SOURCE')
    8       22WRITE(6,23)XP,YP,ZP,AM,AA
    9       23FORMAT(/T6,'XP',T14,'YP',T22,'ZP',T30,'AM',T38,'AA'/T3,F8.4
,T11,F8.4,T19,F8.4,%
   10       T27,F8.4,T35,F8.4)
   11       XS=0
   12       YS=0
   13       ZS=0
   14       TO=0
   15       RETURN
   16       5IF(AA)25,25,30
   17       25WRITE(6,26)
   18       26FORMAT(/T10,'THE PLANE CONSTANT A IS NEGATIVE OR ZERO,RESUL
TINS IN A %
   19       REFLECTION OFF THE BACK OF THE REFLECTOR')
   20       GO TO 22
   21       30IF(AA-ZP+AM*XP)35,35,40
   22       35WRITE(6,36)
   23       36FORMAT(/T10,'THIS POINT LIES ON OR ABOVE THE REFLECTIVE PLA
NE.')
   24       GO TO 22
   25       40CAL1=XP+AM*ZP
   26       CAL2=AM**2+1.
   27       IF(.01-SQRT(CAL1**2))50,50,45
   28       45YS=YP/2.
   29       XS=(AA/CAL2)*((CAL1/(AM*XP-ZP+2.*AA))-AM)
   30       GO TO 51
   31       50XS=(AA/CAL2)*((CAL1/(AM*XP-ZP+2.*AA))-AM)
   32       YS=YP*(CAL2*XS+AM*AA)/CAL1
   33       51ZS=AA+AM*XS
   34       ALDD=SQRT(XS**2+YS**2+ZS**2)+SQRT((XS-XP)**2+(YS-YP)**2+(ZS-Z
P)**2)-SQRT(XP**2+YP**2+ZP**2)
   35       TO=ALDD/US
   36       RETURN
   37       END
```

APPENDIX VII

1.0 CALLING PROGRAMMES FOR SUBROUTINES

1.1 General:

These programmes are illustrations of how the subroutines can be used in programmes to define and constrain reflective surfaces. Since the basic composition of the programmes is straightforward only the programmes and the input format are given along with explanatory notes.

1.2 Programme using a combination of FIPXV and ANYPT:

1.2.1 Composition

The programme name, COXVM, is a mnemonic composed from combination 'FIPXV' and 'Main'. The plane is fixed in space by using FIPXV and the remaining points are then calculated using ANYPT.

1.2.2 Input data and Format

The programme requires the following data in the format as shown:

First data record

data : K
format : I2

Where K is the number of target points in the audience excepting the first one which is used to define the reflective surface in question. The value of K is limited to 10 by a DIMENSION statement; therefore K cannot be increased without changing this value.

Second data/.....

Second data record:

data : XP, YP, ZP, US, TD, XV
format : 3F4.1, F3.0, F5.5, F4.1

This fixes the first point on the reflector by specifying TD and XV as well as the associated target point.

Third and further data records:

data : XP(1), YP(1), ZP(1)
format : 3F4.1

These can be any target points in the audience area.

1.2.2 Output data

If both the plane constant and angle of inclination resulting from the first subroutine are zero, the programme will print the word 'CRASH' because this would be senseless data for the second half of the programme.

When calculations take their normal course, the following data is obtained:

(i) The results of the calculation using FIPXV together with the input data

(ii) The results of the subsequent calculations together with the relevant input data.

1.3 Programme using a combination of FIPZV and ANYPT:

1.3.1 Composition

The programme name COZVM, is a mnemonic composed from 'combination', 'FIPZV' and 'Main'. The plane is fixed in space by using FIPZV and the remaining points are then calculated using ANYPT.

1.3.2 Input/ .....

1.3.2 Input data and Format

This programme is identical to COXVM except that ZV is specified instead of XV.

1.3.3 Output data

The output data and format is identical to COXVM.

1.4 Programme using ANYPT for the calculation of points of reflection on a known plane:

1.4.1 Composition

The programme name POINS is a mnemonic of the word 'points'. It uses the programme ANYPT to calculate reflective points on a known reflector.

1.4.2 Input data and Format

The following data in the format indicated is required:

First data record:

data : K
format : I2

Where K is again the number of target points with a limit of ten.

Second data record:

data : AA, AM
format : F2.1, F3.2

These values define the reflective plane

Third and further records:

data : XP, YP, ZP
format : 3F4.1

Where this can be any target point in the audience area.

CALLING PROGRAM COXVM

```
!EDIT,UPDATE COXVM
!L
    1       %PROGRAM FOR CALCULATING POINTS ON A REFLECTOR USING FIPXV AN
D ANYPT
    2       DIMENSION FP(6,1),OP(6,10)
    3       READ(1,1)K
    4       1FORMAT(I2)
    5       READ(1,2)FP
    6       2FORMAT(3F4.1,F3.2,F5.5,F4.1)
    7       CALL FIPXV(FP(1,1),FP(2,1),FP(3,1),AM,FP(4,1),FP(5,1),FP(6,1)
,YS,ZS,AA)
    8       WRITE(6,7)FP,ZS,YS,AM,AA
    9       7FORMAT(/T10,'XP=',F8.4,' YP=',F8.4,' ZP=',F8.4,' US=',F8.4,'
 TS=',F8.6,/T10,'XV=',F8.4,' ZS=',F8.4,' YS=',F8.4,' AM=',F10.4,' AA=',F
8.4)
   10       WRITE(6,28)
   11       28FORMAT(/T10,'TD',T20,'XS',T30,'YS',T40,'ZS',T50,'XP',T62,'Y
P',T72,'ZP'//)
   12       IF(AM)3,4,3
   13       4IF(AA)3,10,3
   14       3READ(1,6)((OP(L,M),L=1,3),M=1,K)
   15       6FORMAT(3F4.1)
   16       DO 5 I=1,K
   17       OP(4,I)=AM
   18       OP(5,I)=335
   19       OP(6,I)=AA
   20       CALL ANYPT(OP(1,I),OP(2,I),OP(3,I),OP(4,I),OP(5,I),TD,XS,YS,Z
S,OP(6,I))
   21       5WRITE(6,8)TD,XS,YS,ZS,OP(1,I),OP(2,I),OP(3,I)
   22       8FORMAT(/T8,F5.4,T18,F6.2,T28,F6.2,T38,F6.2,T48,F6.2,T58,F6.2
,T62,F6.2)
   23       GO TO 11
   24       10 WRITE(6,9)
   25       9FORMAT(/T10,'CRASH')
   26       11STOP
   27       END
```

CALLING PROGRAM COZVM

```
!EDIT,UPDATE COZVM
!L
    1       %PROGRAM FOR CALCULATING POINTS ON A REFLECTOR USING FIPZV AN
D ANYPT
    2       DIMENSION FP(6,1),OP(6,10)
    3       READ(1,1)K
    4       1FORMAT(I2)
    5       READ(1,2)FP
    6       2FORMAT(3F4.1,F3.2,F5.5,F4.1)
    7       CALL FIPZV(FP(1,1),FP(2,1),FP(3,1),AV,FP(4,1),FP(5,1),XS,YS,F
P(6,1),AA)
    8       WRITE(6,7)FP,XS,YS,AV,AA
    9       7FORMAT(/T12,'XP=',F8.4,' YP=',F8.4,' ZP=',F8.4,' US=',F8.4,'
TD=',F8.4/T12,'ZV=',F8.4,' XS=',F8.4,' YS=',F8.4,' AV=',F10.4,' AA=',F8.
4//T12,'TD',T22,'XS',T32,'YS',T42,'ZS',T52,'XP',T62,'YP',T72,'ZP'//)
   10       IF(AV)3,4,3
   11       4IF(AA)3,10,3
   12       3READ(1,6)((OP(L,M),L=1,3),M=1,K)
   13       6FORMAT(3F4.1)
   14       DO 5 I=1,K
   15       OP(4,I)=AV
   16       OP(5,I)=335
   17       OP(6,I)=AA
   18       CALL ANYPT(OP(1,I),OP(2,I),OP(3,I),OP(4,I),OP(5,I),TD,XS,YS,Z
S,OP(6,I))
   19       5WRITE(6,8)TD,XS,YS,ZS,OP(1,I),OP(2,I),OP(3,I)
   20       8FORMAT(/T9,F5.4,T16,F6.2,T26,F6.2,T36,F6.2,T46,F6.2,T56,F6.2
,T66,F6.2)
   21       GO TO 11
   22       10 WRITE(6,9)
   23       9FORMAT(/T10,'CRASH')
   24       11STOP
   25       END
```

CALLING PROGRAM POINS

```
!EDIT,UPDATE POINS
!L
    1       %PROGRAM FOR CALCULATING POINTS ON A KNOWN PLANE,USING ANYPTP
    2       DIMENSION OP(6,10)
    3       READ(1,1)K
    4       1FORMAT(I2)
    5       READ(1,2)AA,AM
    6       2FORMAT(F2.1,F3.2)
    7       WRITE(6,22)
    8       22FORMAT(/T10,'TD',T20,'XS',T30,'YS',T42,'ZS',T50,'XP',T60,'Y
P',T72,'ZP'//)
    9       3READ(1,6)((OP(L,M),L=1,3),M=1,K)
   12       6FORMAT(3F4.1)
   11       DO 5 I=1,K
   12       OP(4,I)=AM
   13       OP(5,I)=335
   14       OP(6,I)=AA
   15       CALL ANYPT(OP(1,I),OP(2,I),OP(3,I),OP(4,I),OP(5,I),TD,XS,YS,Z
S,OP(6,I))
   16       5WRITE(6,6)TD,XS,YS,ZS,OP(1,I),OP(2,I),OP(3,I)
   17       6FORMAT(/T5,F5.4,T18,F6.2,T28,F6.2,T38,F6.2,T48,F6.2,T58,F6.2
,T68,F6.2)
   18       11STOP
   19       END
```

Author Cilliers Bartolomeus Johannes Le Roux
Name of thesis Computer Aided Design Of Reflective Surfaces In Auditoria. 1976

PUBLISHER:
University of the Witwatersrand, Johannesburg
©2013

LEGAL NOTICES:

Copyright Notice: All materials on the University of the Witwatersrand, Johannesburg Library website are protected by South African copyright law and may not be distributed, transmitted, displayed, or otherwise published in any format, without the prior written permission of the copyright owner.

Disclaimer and Terms of Use: Provided that you maintain all copyright and other notices contained therein, you may download material (one machine readable copy and one print copy per page) for your personal and/or educational non-commercial use only.

The University of the Witwatersrand, Johannesburg, is not responsible for any errors or omissions and excludes any and all liability for any errors in or omissions from the information on the Library website.