

https://dspace.org/

The practicality of using rock massclassification in a narrow tabular orebodyat depth extracting the VentersdorpContact Reef

Thomas Stacey; R van Heerden

SOUTHERN AFRICAN INST MINING METALLURGY
https://hdl.handle.net/10539/47417
WOS

Downloaded from a DSpace repository. https://dspace.org/

The practicality of using rock mass classification in a narrow tabular orebody at depth extracting the Ventersdorp Contact Reef

by R. van Heerden[1], T.R. Stacey[1]

Affiliation:
[1]School of Mining Engineering, University of the Witwatersrand, South Africa

Correspondence to:
R. van Heerden

Email:
ross.vanheerden@live.com

Dates:
Received: 4 Feb. 2025
Revised: 13 Apr. 2025
Accepted: 2 Sept. 2025
Published: October 2025

How to cite:
van Heerden, R., Stacey, T.R. 2025. The practicality of using rock mass classification in a narrow tabular orebody at depth extracting the Ventersdorp Contact Reef. *Journal of the Southern African Institute of Mining and Metallurgy*, vol. 125, no. 10, pp. 609–620

DOI ID:
https://doi.org/10.17159/2411-9717/3662/2025

ORCiD:
R. van Heerden
http://orcid.org/0009-0005-4584-317X
T.R. Stacey
http://orcid.org/0000-0003-3763-9193

Abstract

In the challenging environments of deep-level, narrow tabular orebody gold mines in South Africa, rock mass classification offers a potential method for predicting hazardous areas and optimising rock support systems. This study evaluates the applicability of various rock mass classification systems, with a focus on the Modified or Mining Rock Mass Rating system tailored for high-stress, deep-level mining conditions. Extensive data collection was conducted at Kusasalethu Mine, involving underground mapping and analysis of the 2020/2021 fall of ground database. The Mining Rock Mass Rating system was adapted to the unique geological and operational conditions, providing a simplified, user-friendly approach for rock engineering and geology personnel. Results indicate that this adapted Mining Rock Mass Rating system effectively quantifies rock mass conditions and influences proactive mining adjustments. The study's findings highlight the system's capability to enhance understanding of rock mass behaviour and substantially mitigate the occurrence of rockfalls and ground collapses. Further application and refinement of the system are recommended to continuously improve mining safety and efficiency.

Keywords

Rock mass classification, Ventersdorp Contact Reef, deep-level narrow tabular mining, sequential grid mining method, stress fracturing, prominent jointing, blasting

Introduction

The gold mines in South Africa present an extremely challenging mining environment: narrow tabular reefs and hence narrow tabular stopes; very deep mining, now in the region of 3600 m below surface; correspondingly, very high stress, brittle rock environment, leading to induced fracturing and rockfalls, as well as seismicity and rock bursts. The combination of these conditions has resulted in hazardous mining, and the result has been a poor safety record, with many accidents and fatalities related to rock bursts and rockfalls. The safety record for the mining industry showed improvement over the past 10 years, but the 2020 statistics were worse than the previous year. The industry further regressed by 23% in 2021 compared to 2020, but an improvement of 34% was seen at the end of 2022. Unfortunately, by the end of 2023 a 65% regression was seen in rock burst and rockfall fatalities (Minerals Council South Africa, 2024), indicating that further improvement is warranted. To achieve this, a method is required that could provide advanced indications of locations that may be more hazardous than others, and where special precautions, such as additional or different rock support, may be advised and implemented.
A method that may fulfil this requirement is Rock Mass Classification (RMC). This is a method that quantifies the quality of the rock mass, giving a numerical rock mass rating. It was considered that this approach might provide the required "warning" of potentially hazardous rock conditions, and therefore, research into the approach and its applicability in a narrow tabular reef gold mining environment was carried out.

Rock mass classification methods, in the forms that are commonly used all over the world, were introduced some 50 years ago. They have become an extremely popular and useful means of estimating rock mass stability, support requirements, and rock mass deformability and strength. They were developed initially for the tunnelling industry and are widely used in civil engineering and massive mining, but have rarely been used in the South African gold mining industry. Dunn and Hungwe (2004) applied rock mass classification on a gold mine, but the application proved unsatisfactory (Dunn, Stacey, 2006). Watson (2004) successfully applied a rock mass rating system to evaluate stope stability in platinum mines.

Rock mass classification methods

There are numerous rock mass classification methods available, the most common being the Q System (Barton, et al., 1974); (Barton, 2002), the Geomechanics Classification RMR System (Bieniawski, 1973); (Bieniawski, 1989) and the Geological Strength Index, GSI (Hoek, 1999) A brief review of these systems follows:

The *Q* System is based on three aspects:

- rock block size, represented by (RQD/J_n)
- joint shear strength, represented *by* (J_r/J_a)
- confining stress, represented by (J_w/SRF)

where: *RQD* is the rock quality designation (Deere, Deere, 1989)

J_n is the joint set number
J_r is the joint roughness number
J_a is the joint alteration number
J_w is the joint water reduction factor
SRF is the stress reduction factor.

The use of these parameters is very logical since the stability of an excavation in a rock mass is controlled by the size/number of blocks in the walls, the shear strength of the block surfaces, and the confining stress, which holds the rock blocks together, or maybe large enough to fracture/break the blocks. The Q value is calculated from the following Equation 1:

$$Q = (RQD/J_n).(J_r/J_a).(J_w/SRF) \quad [1]$$

Q ranges on a log scale from 0.001 for extremely poor rock to 1000 for excellent rock. The *Q* system does not take the rock material strength into account explicitly, although it is implicitly included in the SRF. The orientation of joints is also not taken into account since it is considered that the number of joint sets, and hence the potential freedom of movement for rock blocks, is more important. The *Q* system has been modified slightly since its original publication (Barton, 2002).

In developing the Geomechanics Classification system, Bieniawski (1973) identified five parameters that he considered to be most important regarding the stability of excavations in a rock mass. These are the rock material strength, uniaxial compressive strength (*UCS*), rock quality designation (*RQD*), joint spacing, joint roughness and separation, and groundwater. Considerable weight is given to block size in the system since both *RQD* and joint spacing are classification parameters. Bieniawski (1973) judged the relative importance of the five parameters and allocated numerical values to each parameter such that the summed maximum rock mass rating (RMR) value would total 100. Finally, an adjustment was applied, considering the expected effect on the stability of the joint orientations. The initial parameter values in the system were reviewed, and some changed based on case study applications, and the final values appear in Bieniawski (1989). The standard geomechanics classification does not account for the stress present in the rock mass. However, an adjustment has subsequently been developed by Lowson and Bieniawski (2013).

Relationships have been found between RMR and Q as follows:

Bieniawski (1989): $RMR = 9 \ln Q + 44$ [2]

Barton (2002): $RMR = 15 \log Q + 50$ [3]

Laubscher (Laubscher, Taylor, 1976) attempted to use the Geomechanics Classification System in a caving mining environment but found that it did not perform satisfactorily. He therefore developed a modified version of the system (the Mining Rock Mass Rating system, Laubscher, (1977); Laubscher, (1990)), using the same five parameters, but combining the joint condition and groundwater parameters. He allocated parameter ratings that were different from the Geomechanics Classification System. Laubscher's system gives a rock mass rating for the in-situ rock mass condition before it is influenced by mining. Four adjustments are then applied to downrate the RMR due to the effects of mining: a stress adjustment to take into account confining stress and stress changes due to mining; an adjustment for joint orientation to take into account adversely oriented joints; an adjustment to cater for the effects of blasting on the rock mass; and a weathering adjustment to account for deterioration of rock conditions after exposure, for example, slaking rocks. The result is the Modified Rock Mass Rating, or Mining Rock Mass Rating (MRMR). This system has been widely used in mining and is commonly used to estimate cavability and the determination of the size of the undercut necessary to initiate caving propagation. It was also used as a basis for the development of a method for the rapid assessment of the stability of rock slopes in open pit mines (Haines, et al., 1991).

Revision of the MRMR system was carried out, and the revised system introduced new factors to the system (Jakubec, Laubscher, 2000). The changes/additions to the MRMR system were the introduction of rock block strength; the introduction of 'cemented' joint adjustments; changes in the joint condition rating; and the expression of the water impact as an MRMR adjustment. Certain points were raised by Jakubec, Laubscher (2000) that are important to note. These observations apply to the MRMR system, but it can be argued that they are valid for other rating systems as well. Common mistakes in classifying rock masses highlighted by Jakubec and Laubscher (2000) are the following:

- Using ratings as an average across certain geological domains.
- Confusing mining-induced and naturally occurring defects such as joints and fractures.
- Ignoring variability of values of individual parameters.
- Averaging joint conditions for individual discontinuity sets.
- Wrongly adjusting for alteration and weathering.

It is important to ensure the correctness of collected data, and that strength anisotropy should not be ignored, since it can lead to an under or overestimation of the rock mass competency (Jakubec, Laubscher, 2000).

The Geological Strength Index (GSI) developed by Hoek (1999) is a very useful system owing to its visual format. The system was developed over several years and careful thought was given to the descriptions corresponding with the rock mass structure and the joint surface conditions. It provides a very rapid means of quantifying the rock mass, and correlates with the Geomechanics Classification RMR System:

$$GSI = RMR - 5 \quad [4]$$

However, the approach does not take into account stress, or groundwater, and was therefore not considered to be satisfactory for application in deep-level gold mining.

In summary, rock mass classification is a useful tool for defining the quality of the rock mass. For application in deep-level gold mines, a rock mass classification system suitable for a narrow reef tabular environment had to be chosen as the basis for building a rating system. The system considered to be best suited is the modified/mining rock mass rating system developed by Laubscher (1990), as it was designed for mining scenarios from the start. Although it was developed on data from cave mining, it is considered that it can be modified to suit narrow tabular reef mining at depth.

The practicality of using rock mass classification in a narrow tabular orebody at depth

The basis of good rock mass classification is a good characterisation of the rock mass since this will provide good quality input data to the classification. The better the rock mass character is known, in quantifiable terms, the less variability that needs to be taken into account in the input parameters for the classification. When the number of planes of weakness becomes such that it is impossible or impractical to consider them individually, the most efficient way of handling this type of rock mass is to use rock mass classification.

Mining environment and data collection

Kusasalethu is situated approximately 90km to the west of Johannesburg in the West Witwatersrand Basin. The Ventersdorp Contact Reef (VCR), which is overlain by the Alberton Porphyry Formation (Roberts, Schweitzer, 1999), is extracted. The current mining takes place at depths of 2700 m–3388 m below the collar elevation and employs the sequential grid mining method (Jager, Ryder, 1999); (Handley, et al., 2000). The sequential grid method employs a series of raise lines spaced 200 m apart, separated by 30m wide dip stabilising pillars. The access/ventilation tunnels are placed 'deep' in the quartzite footwall, greater than 80m below the reef plane, and are excavated ahead of the mining operations. Long crosscuts every 200 m link the main haulages to the reef plane where raises are developed. The mining sequence followed helps to manage the stress levels and limit the incidence of seismicity.

Mining is focused on the Ventersdorp Contact Reef (VCR), which is a conglomerate reef band. In the mine, this reef has a strike of N65°E and a dip of 23° to the south. The reef consists of various terraces separated by slopes, all of which may be structurally deformed by duplicated reef zones. The grade is highly variable with unpay zones typically occupying sand-filled channels. The reef is characterised by a relatively large amount of faulting with throws of less than 10 metres and the mined stoping width ranges from 115 cm to 160 cm.

The hanging wall is Ventersdorp Lava, which has a UCS of the order of 300MPa. Conditions vary considerably across the VCR, caused by pilloids, inter-pilloid breccias and joints associated with slopes and duplicated reef zones. A further contributing factor is a relatively large amount of flat faulting, which extends into the hangingwall due to the brittle nature of the hangingwall lava. The footwall is competent quartzite, with a UCS of 180 to 250MPa, which extends to a depth of approximately 430 m below the reef on the eastern boundary of the mine and about 550 m below the reef on the western boundary. This enables haulages and most other primary related development to be sited deep in the footwall in competent rock. When a major geological feature is present, the dip stabilising pillars may be shifted to include the feature, which would then act as part of the regional stability design and will form part of the pillar system. Low-grade areas can be left unmined, which further improves the stabilising pillar system. Backfilling is practised to improve the overall stability, reduce closure rates, improve regional support, and enhance local support provided by elongates or Rapid Yielding Hydraulic Props (RYHP) (Jager, Ryder, 1999); (Handley, et al., 2000). In this mining environment, to understand and develop a rock mass rating system that is simple and user-friendly, a set of data needed to be collected. Data was collected using two methods: underground mapping/observations, using a simplified version of scan line mapping; and analysis of the 2020/2021 fall of ground database. Furthermore, research carried out by Gumede (Stacey, Gumede, 2007) was also considered as it mapped prominent joint sets in neighbouring mines.

Underground mapping was based on the scan line system. In this system, the mining panel is divided into three distinct 5 m areas: the top, middle and bottom 5 m of the face, with observations being made within 2 m of the mining face. This method initially tended to have a bias towards at least two fracture sets. However, proximity to the topmost or bottommost portions of the panel could skew the results. Consequently, the portion of the hanging wall that was sampled was changed to every 5.0 m starting at least 3.0 m–5.0 m from the top of the panel. Practical mapping was difficult due to low stoping widths, to permanent in-stope netting obstructing the hanging wall, to low levels of illumination, and long travel times to working areas.

From the data collected, the following observations were made and recorded with regard to prominent joint set strike and dip, infilling, roughness and spacing. The joint length was most difficult to determine due to the limited space in a panel. On average, a joint trace length of approximately 2.0 m–2.5 m was observed. The true length could be greater than this, but could not be determined precisely.

The strike of an observed joint was measured in relation to the orientation of the panel face and captured upon returning to surface. Orientations of prominent joint sets identified at the mine are shown in Table 1. The last surveyed and measured face position was determined using the survey sheet (scale 1:200), with north = 0°, and the strike of the joint was determined with an allowance of ±5° and then captured in the database. The method described gives a good indication of the joint's strike direction. The common practice at the mine with regard to face orientation is to lay out the panel's strike gullies 5° above the reef strike direction to accommodate the egress of water from the panels and to assist in cleaning operations. The general face orientation for panels mining in the easterly direction is 150° from north, or 5° south of south-east, and for the western panels is 335° from north, or 25° west of north. The deviation associated with these orientations is normally 5° but could be as high as 7°.

The database obtained for implementation of the RMR consisted of data from 30 data collection points in various areas of the mine ranging in depth from 2800 m–3300 m below surface. The data was collected from different sources such as fall of ground investigations, ledging and regular breast mining operations.

Table 1
Prominent joint sets

	Prominent joint set 1	Prominent joint set 2
Joint surface	rough undulating/planar.	rough planar.
Joint infilling	tight no Infill/1 mm calcite.	no infill/calcite infill 0 mm–2 mm.
Mean joint dip and direction	80° W or E	75° E
Mean joint orientation (0°= north)	317°	302°
Joint spacing	0.2 m–1.0 m	0.3 m–1.5 m

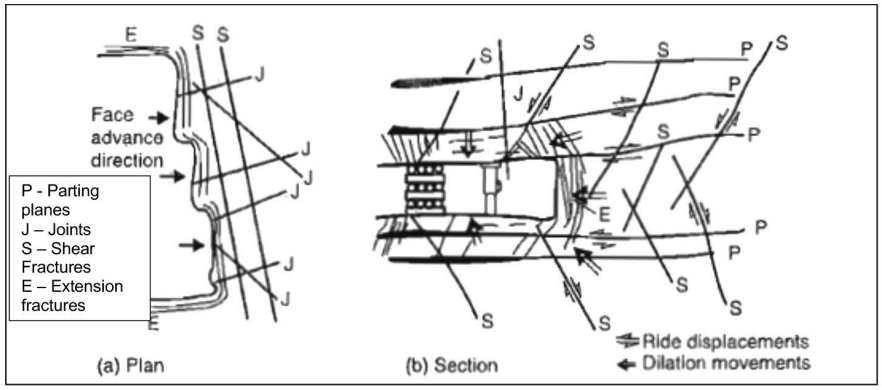

Figure 1—Fracture and deformation patterns around a deep stope (Jager, Ryder, 1999)

Fracture data was collected owing to the major influence of fractures on the rock mass surrounding the stopes at depth, and the inherent influence of a fracture as the boundary of a fall of ground. The approach used in capturing the fracture data was similar to that used for the joint data. Fracture orientation, fracture dip and direction, and fracture spacing were recorded. The fracture orientation generally conforms to the shape of the excavation, especially in terms of extension-type fractures, which can become the dominant set of discontinuities in a stope (Jager, Ryder, 1999). Extension fractures, which are the most common type of fractures experienced in deep-level mining, form in induced tension, but in a wholly compressive stress field. They develop on a plane normal to the minor principal stress and are sensitive to changes in stress orientation. These types of fractures are planar and clean, and often start or stop against bedding planes and joints. Owing to the ubiquitous nature of the fractures around a stope, measurements were taken in three areas of the panel. The prominence of the fractures was captured, the general spacing between the fractures of each set, and the dip of the fractures. The fracture orientation as stated before conforms to the outline of the excavation and therefore does not have a uniform overall strike direction. The common fracture sets observed are summarised in Table 2 and illustrated in Figures 1 and 2.

The main types of fractures focused on are extension fractures. Although shear fractures are present, they are not as common as extension fracturing and have not been recorded as part of this study. Furthermore, at depth, tensile fracturing is not as common as in a low-stress mining environment (Jager, Ryder,

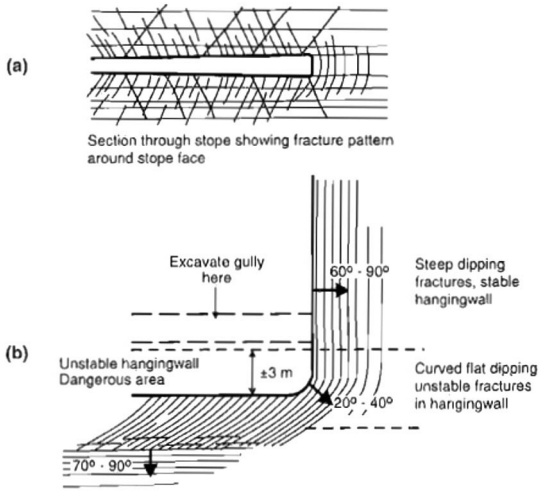

Figure 2—Fracturing around a deep stope near a down-dip abutment (Jager, Ryder, 1999)

1999). Observations from underground visits indicated that stress fracturing and jointing have a major influence on the stability of the rock mass as can be seen in Figure 3.

The average fall-out thickness measured at the mine is 1.2m as recorded in the mine's fall of ground database, upon which support designs were based. As can be seen in Figure 1, the breaks in the rock mass affect the overall stability and are taken into account and captured using the fracture frequency per metre system. This simplified system requires the measurement of all the

Table 2
Common fracture sets observed underground

	Fracture set 1	Fracture set 2	Fracture set 3
Prominence	very (always observed).	very (always observed).	average (mostly observed along static abutments).
Dip and dip direction	60°–85° (mean = 68°) commonly dips away from the direction of mining).	55°–85° (Mean = 80°) Dip is dependent on the direction of mining.	tend to curve with a flat dip of 20°–40°.
Fracture orientation	face parallel, greatly influenced by the overall panel face shape.	normally perpendicular to fracture set 1.	curved as it is found at the intersection of the abutment and advancing face.
Fracture spacing	0.05 m–0.4 m	0.02 m–0.3 m	0.02 m–0.4 m

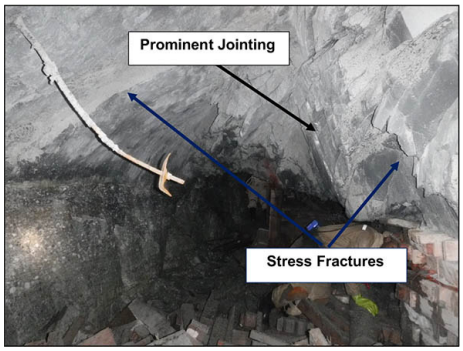

Figure 3—Influence of stress fractures and prominent jointing on a fall of ground in one of the stoping panels at the mine

discontinuities that are intersected along the scan line (Laubscher, 1990), which is done at each point in the panel where the data is collected. The user should know whether it is a one, two or three-joint system being sampled. Measurements of fracture frequency are made along the hangingwall of the panel and, if necessary, the north or south sidewall of the panel, depending on the orientation of the features.

The rock mass rating method adopted

In applying the MRMR System, the mining method which is used at the mine required adjustments to Laubscher's (1990) parameter ratings. The influence of various parameters had to be included, and those which are not relevant to be excluded, to create the most effective method for rock mass classification for the mine and mining method. Some of the parameter ratings needed to be adjusted to accommodate the specific influence of the parameter on the quality of the rock mass.

The Modified/Mining Rock Mass Rating (MRMR) described by Laubscher and Taylor (1976) and Laubscher (1977); (1984) uses the following parameters:

- RQD
- Intact Rock Strength,
- Spacing of Fractures and Joints (FF/m used in this case),
- Joint Condition and groundwater.

These parameters give the rating for the in-situ rock mass. Thereafter, adjustments for the following are applied to the RMR to take into account factors introduced by the mining process:

- Weathering
- Joint Orientation
- Mining Induced Stresses
- The Effects of Blasting.

The justification for using this method of rock mass classification at the mine is its simplicity, and that it takes into account the in situ rock mass rating and those factors influencing the rock mass by mining within it. The MRMR system as published is, however, not entirely compatible with the mining method used, the type of orebody and the mining depth, and modifications had to be made to the system, whilst keeping it simple and easy to use. After analysing empirically what affects the rock mass conditions the most at the mine, the following parameters were considered.

- Intact rock strength remained in place even though the general UCS of the rock in which the Ventersdorp Contact Reef is situated is strong. If a low-strength rock is intersected, how it reacts to the high-stress levels may be somewhat different from that of a high-strength rock in terms of fracturing and competence. The UCS parameter is self-explanatory and the rating values were adjusted from those given by Laubscher (1990) to account for the higher rock strengths experienced at the mine. The overall contribution to the rock mass rating out of 100 was reduced from 20 to 10 as the Ventersdorp Contact Reef at the mine is overlain by the Alberton Porphyry Formation and has a quartzite conglomerate footwall below the reef, which remains relatively unaltered (Roberts, Schweitzer, 1999). The lava extrusion in this area ranges from 160 m to 400 m in thickness and is incorporated into a geotechnical area described by Roberts, Schweitzer (1999). It remains relatively unaltered unless it is close to a large fault or igneous intrusion.
- The joint condition is captured in the database. However, it has not been included in the RMR, since the observed joint and fracture conditions are similar throughout the mine. Groundwater was also not included as water is very seldom encountered during mining. If water is encountered in the future, its effect will be assessed specifically and recommendations given for the specific area. There are currently no such water conditions in the mine.
- Both joint and fracture data had to be collected, as, individually, and in combination, these two parameters have a large impact on the rock mass conditions. The numbers of joint and fracture sets found in a panel directly influence the rock mass conditions, i.e. the more weakness planes, the greater the likelihood of failure occurring in the hangingwall. Prominent jointing has therefore been retained as part of the RMR adopted, because it is commonly found in all the panels and is accounted for in the main rock mass classification systems in use today, as indicated by Rehman, et al., (2018) and Hoek (2006). Stress fracturing is very prominent at depth due to the high levels of stress, and directly affects the stability of the hanging wall. Stress fractures could become the dominant set of discontinuities (Jager, Ryder, 1999). A parameter for stress-induced fracturing was therefore added. As previously stated, prominent jointing and fracturing have been accounted for equivalently in the rock mass rating. Laubscher (1990) only accounted for the effect of fracturing under the FF/m portion of the MRMR system and emphasised the effect of jointing and joint condition. The parameters that have been included in the current system deal with the strike orientation of the features as well as the dip. These two factors, along with the fracture spacing, which is added later, encompass the joint and fracture parameters of the rating system. The jointing and fracture properties in terms of joint surface condition and infilling are captured separately, but not included in the rating, as it was found that the prominent joint sets have similar properties throughout the mine. Where anomalous properties are identified they are addressed with relevant remedial actions in terms of support and blasting techniques. Two prominent joint sets have been identified on the mine and when found in a stoping panel, influence falls of ground and ground conditions.
- Fracture frequency per metre is used in place of RQD and joint spacing, as it tends to be more sensitive (Laubscher, 1990) than RQD, which discounts weakness plane spacing of less than 100mm (Palmstrom, 2005), (Hoek, 2006), the explanation of which is well covered by Pells, et al (2017).

In terms of the mining adjustments, the following were considered:

- Mining-induced stress was assessed slightly differently from the published method and simplified. What has been included is the average face stress in place of mining-induced stresses. Laubscher (1990) indicated that the adjustment for mining-induced stresses can range from 60% to 120% but due to the high levels of stress at great depths, the consequence is that a highly fractured hanging wall is substantially more stable compared to shallower depths as the horizontal stresses tend to clamp the discontinuities (Jager, Ryder, 1999) resulting in a more stable hanging wall. Therefore, due to the high-stress regime at depth, the common adjustment would be 120%, indicating good confinement as described by Laubscher (1977). By using the adjustments described by Laubscher (1990) the rating would almost always increase positively, and taking cognisance of the aforementioned, it was decided best to use the average face stress, as it influences the occurrence of stress fracturing in the hangingwall of the panel, which is easily determined by numerical modelling and underground observations.
- The process of breaking the rock using conventional blasting methods also influences the rock mass conditions in a stoping panel and therefore, this parameter has been retained as an adjustment. Pre-conditioning blasting can also affect the condition of the rock mass either negatively or positively, and therefore had to be included, as the mine practices face perpendicular pre-conditioning. When done correctly, pre-conditioning can improve the overall hangingwall conditions and lead to improved face advances (Toper, et al., 2003). When done incorrectly, the pre-conditioning blast has a negative effect on the rock mass conditions and can result in poor panel face shapes and destabilisation of the hangingwall.
- Discontinuity orientation was retained as an adjustment, as adversely orientated weakness planes affect the stability of the rock mass. For example, if a discontinuity has a dip of 30° then the very same stress that enhances stability with a more steeply dipping feature, can promote instability, and cognisance must be taken of this factor.

Modified rock mass rating for the Ventersdorp contact Reef

Analysis of the data was conducted using the rock mass rating system developed for the VCR stope at the mine, which is the modified version of the MRMR system as described above. The system is simple and easy to use by rock engineering and geology personnel.

The $MRMR_{VCR}$ designed for use in stoping environments at the mine maintains the principles stated by Laubscher (1990), keeping it as straightforward and simple as possible. The uniaxial compressive strength of the rock was taken into consideration and is the strength of the rock between joints and fractures (Laubscher, 1990). The values of the uniaxial compressive strength were modified to cater for the higher host rock strengths found in the VCR stratigraphy. Rock strength values reported by Güler (1996) for the 'hard-lava' are around 250MPa, and 210–260MPa is indicated by Ryder and Jager (2002). The underlying quartzite-conglomerate can have UCS values of around 250MPa as well. However, the main focus is the classification of the hanging wall. The values and ratings for the UCS parameter in the system are indicated in Table 3

The influence of prominent jointing is the next parameter considered. From underground observations and experience, two influential joint sets were identified, with random joints being present as well. From knowledge of the two main contributors to hangingwall instability at the mine, the rating for prominent jointing was defined. This followed a similar process to that of Laubscher, with a cumulative percentage adjustment of a possible total value of 25, as shown in Table 4. The data input for this parameter is obtained from underground observations captured at various locations in the mine. The value adjustments were rated on the influence of the prominent joint set on the ground conditions.

Once the joint rating is complete for the specific panel, a fracture rating is allocated. The most common fractures observed were extension fractures generally with close spacing of approximately 15cm. A fracture rating with a total value of 25 is allocated, and cumulative adjustments are applied to obtain a final rating, similar to the process for prominent jointing (Table 4). The down-rating values become more significant when more fracture sets are present in the rock mass, as each breaks the rock mass further into smaller blocks that can dislodge see Table 5.

To incorporate the number of breaks in the rock mass, fracture frequency per metre is used. This technique requires the measurement of all breaks in the hangingwall (fractures and joints) along a scan line. The ratings originally adopted by Laubscher have been retained unchanged, Table 6.

Once the RMR value of the classification system is obtained, the adjustments to take into account the effects of mining are applied to obtain the final 'modified' rock mass rating. The adjustment values were based on parameters that affected the overall quality of the rock mass significantly and were kept to a total of 4. Average Face Stress (AFS) is the first adjustment, and the rationale behind this adjustment is the effect the face stress has on stress fracturing. As the levels of stress increase so does the intensity of stress fracturing, the occurrence of which is easily observed underground, as can be seen in Figure 4.

The average face stress is determined from routine numerical modelling, an example shown in Figure 5, and results are shown in Table 7.

The fracturing observed correlates with the high incidence of stress found at this specific raise line and in turn manifests as more intense stress fracturing as well as an increased occurrence of seismicity. It was therefore considered appropriate to add this adjustment. Adjustment values are shown in Table 8.

A slight downgrade is applied for values equal to the design since stress fracturing is still influential at these stress levels. The downgraded values could change with future calibration.

A direct contributor to poor and unstable ground conditions is the quality of the production blast and the pre-conditioning blast. The mine only uses conventional blasting methods, which involve the drilling of blast holes using handheld drilling machines, and holes are charged with an emulsion-type explosive.

Table 3
UCS values and associated ratings

Value (MPa)	<271–300	299–270	269–240	239–200	199–160	159–110	109–80	<80
Rating out of 10	10	8.75	7.5	6	4.75	3	1.5	0.5

Table 4

Prominent jointing and cumulative percentage adjustments

Cumulative percentage adjustment of a possible rating of 25				
Jointing present	**Y**	**N**		
Rating	**25** x (joint dip 1,2,3) x (joint strike 1,2,3) x dip direction.	No adjustment to the total rating.		
Joint set 1 dip (JS1D)	**0°–30°**	**30°–60°**	**60°–90°**	**N/A**
Percentage rating downgrade	87% (0.87)	95% (0.95)	100% (1)	100% (1.0)
Joint set 2 dip (JS2D)	**0°–30°**	**30°–60°**	**60°–90°**	**N/A**
Percentage rating downgrade	0.8% (0.8)	90% (0.9)	98% (0.98)	100% (1.0)
Joint set 3 dip (JS3D)	**0°–30°**	**30°–60°**	**60°–90°**	**N/A**
Percentage rating downgrade	70% (0.7)	87% (0.87)	95% (0.95)	100% (1.0)
Joint set 1 strike (JS1S)	**0°–30°**	**30°–60°**	**60°–90°**	**N/A**
Percentage rating downgrade	99% (0.99)	95% (0.95)	98% (0.98)	100% (1.0).
Joint set 2 strike (JS2S)	**0°–30°**	**30°–60°**	**60°–90°**	**N/A**
Percentage rating downgrade	98% (0.98)	90% (0.9)	97% (0.97)	100% (1.0)
Joint set 3 strike (JS3S)	**0°–30°**	**30°–60°**	**60°–90°**	**N/A**
Percentage rating downgrade	95% (0.95)	87% (0.87)	93% (0.93)	100% (1.0)
Dip direction	**Favourable**	**Unfavourable**		
Percentage rating downgrade	100% (1.0).	90% (0.9).		

Table 5

Stress fracturing and cumulative percentage adjustments

Cumulative percentage adjustment of a possible rating of 25				
Fracturing present	**Y**	**N**		
Rating	25 x (Fracture Dip 1,2,3) x Fracture Strike (1,2,3) x dip direction.	no adjustment to the rating.		
Fracture set 1 dip (FS1D)	**0°–30°**	**30°–60°**	**60°–90°**	**N/A**
Percentage rating downgrade	87% (0.87)	95% (0.95).	100% (1.0).	100% (1.0).
Fracture set 2 dip (FS2D)	**0°–30°**	**30°–60°**	**60°–90°**	**N/A**
Percentage rating downgrade	80% (0.8)	90% (0.9)	98% (0.98)	100% (1.0)
Fracture set 3 dip (FS3D)	**0°–30°**	**30°–60°**	**60°–90°**	**N/A**
Percentage rating downgrade	70% (0.7)	87% (0.87)	95% (0.95)	100% (1.0)
Fracture set 1 strike (FS1S)	**0°–30°**	**30°–60°**	**60°–90°**	**N/A**
Percentage rating downgrade	99% (0.99)	95% (0.95)	98% (0.98)	100% (1.0)
Fracture set 2 strike (FS2S)	**0°–30°**	**30°–60°**	**60°–90°**	**N/A**
Percentage rating downgrade	98% (0.98)	90% (0.9)	97% (0.97)	100% (1.0)
Fracture set 3 strike (FS3S)	**0°–30°**	**30°–60°**	**60°–90°**	**N/A**
Percentage rating downgrade	95% (0.95)	87% (0.87)	93% (0.93)	100% (1.0)
Dip direction	**Favourable**	**Unfavourable**		
Percentage rating downgrade	100% (1.0)	80% (0.8)		

The preconditioning standard for the mine requires 2.4 m preconditioning holes to be drilled in the middle of the mining face and 2.4m apart along the length of the face. Two-thirds of the hole is charged with explosives and the remainder is filled with stemming material. The timing of the detonation of the pre-conditioning blast relative to the production blast is very important. Poor timing may lead to ineffective preconditioning and/or misfires, which may result in blast damage to the rock mass and negate the benefits that can be gained from preconditioning. The preconditioning holes should be detonated ahead of the production holes. When the hangingwall beam is damaged by the blast, due to poor drilling and/or charging discipline, very poor and difficult-to-control ground conditions are created; and since blasting creates new fractures as well as loosening the rock mass, possibly causing movement along joint and fracture planes, poor discipline more often than not results in a fall of ground. Hence, the production blast adjustments adopted by Laubscher have been retained. A poor quality blast can be described by the presence of blast sockets, incorrect drilling angle/direction, incorrect burden spacing, overcharging of the holes, lack of stemming and the instance of pre-conditioning timing as well.

Table 6

Fracture frequency per metre ratings, after Laubscher (1990)

Fracture frequency per metre FF/m (40 points allocated)			
	Rating		
Average per metre	1 Set	2 Set	3 Set
0.1	40	40	40
0.15	40	40	40
0.2	40	40	38
0.25	40	38	36
0.3	38	36	34
0.5	36	34	31
0.8	34	31	28
1	31	28	26
1.5	29	26	24
2	26	24	21
3	24	21	18
5	21	18	15
7	18	15	12
10	15	12	10
15	12	10	7
20	10	7	5
30	7	5	2
40	5	2	0



Figure 4—Closely spaced stress fracturing (5 cm–15 cm) observed in a panel with face stress values exceeding 350MPa

The blasting adjustments applied for the $MRMR_{VCR}$ are shown in Tables 9 and 10.

The last adjustment that has been used in the rock mass rating system for the mine is for joint orientation. As the size, shape and orientation of joints affect the behaviour of the rock mass, the orientations of the joint and fracture planes need to be taken into consideration, as well as the interaction of these planes. The attitudes of the joints and stress fractures, and whether the bases of the rock blocks are exposed, have a significant influence on the stability of the excavation, and the rating should be adjusted accordingly. The adjustment depends on the attitude of these breaks in the rock mass with respect to the vertical axis of the block. Laubscher considers gravity as the most influential force, and that the instability of the block depends on the number of the joints that dip away from the vertical axis. It is pertinent to note that hangingwall strata are clamped together by high horizontal stresses at great depth and can be self-supporting under static conditions. The presence of low-angle jointing and fracturing can nevertheless give rise to ground control problems (Jager and Ryder, 1999).

Table 7

Stress and ERR values from numerical modelling

Sigma 1 (MPa) – average face stress					
Panel	Jan	Feb	Mar	Apr	May
A	272	303	356	336	324
B	367	343	308	310	320
C	280	304	347	352	333
D	386	391	400	411	420
Energy release rate (ERR – MJ/m²)					
A	11	11	14	16	15
B	14	16	13	14	14
C	11	14	17	19	18
D	20	20	22	23	24

Table 8

Average face stress adjustment

Average face stress determined from numerical modelling (design = 250 MPa) adjustment	
Less than the design value	100% (1.0)
Equal to the design value	98% (0.98)
Greater than the design value	90% (0.9)

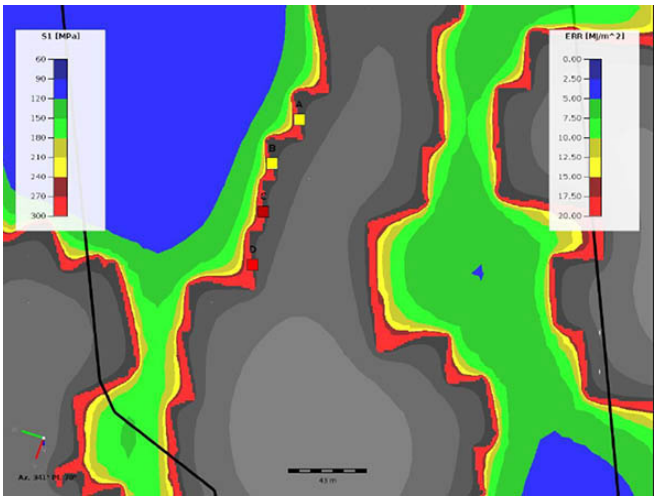

Figure 5—Numerical modelling results showing the high-stress and ERR levels in the same panel in which the photograph in Figure 4 was taken

Gravity-related falls of ground contribute to more than 60% of the total falls of ground recorded annually at the mine. Laubscher's values for the joint/fracture plane adjustments have been retained, as shown in Table 11.

The categories or classes in which the ratings fall are indicated in Table 12.

Baseline panel

To obtain meaningful values from the classification system, a theoretical, but practical, baseline value had to be determined. The baseline value represents a panel with fair to good conditions, which will not require any changes with regard to support and/or mining techniques. The baseline panel characteristics are:

- The UCS value remains reasonably constant throughout the mine and ranges from 250MPa–300MPa for the Ventersdorp Lava hangingwall (Roberts, Schweitzer, 1999).

Table 9

Production blasting adjustment

Production blasting quality	Adjustment
Good	97% (0.97)
Poor	90% (0.9)

Table 10

Preconditioning blasting adjustment

Preconditioning blasting quality	Adjustment
Good	100% (1.0)
Poor	90% (0.9)

Table 11

Percentage adjustments for joint orientation (Laubscher, 1990)

No. of joints defining the block	No. of faces inclined away from the vertical				
	Rating adjustment				
	70%	75%	80%	85%	90%
3	3	-	2	-	-
4	4	3	-	2	-
5	5	4	3	2	1
6	6	5	4	3	2,1

Table 12

RMR_{VCR} and $MRMR_{VCR}$ class ratings remain the same as the original (Laubscher, 1990)

Class rating	5	4	3	2	1
RMR_{VCR} & $MRMR_{VCR}$ value	0–20	21–40	41–60	61–80	81–100
Basic description	poor	poor - average	average	average - good	good

- One prominent joint set striking near-parallel to the face, indicating a strike of 300° from the north. This is the most common joint set found at the mine.
- Two fracture sets, the first of which is common extension fracturing, striking parallel to the face, with a dip of 60° away from the direction of mining. The extension fractures have a spacing of 10cm–40cm. The second fracture set is normally identified at the top or bottom of the panel, has a dip of approximately 70° over the excavation/panel, has a strike that conforms to the direction of mining, and is near perpendicular to the strike of the first fracture set.
- Lastly, the number of fractures per metre is included as 5–7, taking into account the joint set and two fracture sets.

The final baseline RMRVCR value is calculated as 65–70, which indicates an average to good rock mass before the mining adjustments are applied. The mining adjustments considered to apply to the baseline panel are:

- The average face stress is equal to the design, therefore an adjustment of 98% is allocated.
- The production and pre-conditioning blasting quality is considered to be good and a 97% adjustment is applied for the production blast, and a 100% adjustment for the pre-conditioning blast.
- Lastly, an adjustment is applied for the number of joint/fracture planes that are orientated away from the vertical. Taking into consideration that at least 4 of the planes defining the block will have an attitude orientated away from the vertical, with the top and bottom contacts being horizontal, the values given are 4 joints/fractures defining the plane of which at last 4 are orientated away from the vertical. This gives an adjustment value of 70%. Note that one of the prominent joint sets has a dip ranging from 80°–90°, and this may change the value of the number of planes orientated from the vertical to 2 or 3.

The final adjusted rating, taking into account the effects of mining, will be in the range of 45–55 resulting in an average rock mass. This gives a good indication of the effects of mining on the rock mass as well as of the orientations of the weakness planes.

$MRMR_{VCR}$ jointing adjustment change

The initial joint rating values were harsh and skewed the RMR_{VCR} value before the mining adjustments. Therefore, the jointing adjustments were equated to those of the fractures, since the jointing and fracturing affect the rock mass stability equally, as they both create breaks within the rock, along which failure can take place.

$MRMR_{VCR}$ Correlation with poor ground conditions and falls of ground

The initial data that was collected during underground visits consisted of 23 separate working panels and an additional 7 working places were added by the middle of 2023, including one raise inspection before the commencement of ledging. The types of visits that were conducted were normal panel audits, poor ground condition investigations, fall of ground investigations, pre-ledge inspections and fracture mapping. The different visits, RMR_{VCR} values and $MRMR_{VCR}$ values are indicated in Table 13.

From Table 13 it can be seen that the average RMR_{VCR} value for most panels where falls of ground occurred is 68, and the $MRMR_{VCR}$ is 42 after adjustments. This is an indication that, even though the RMR_{VCR} value might fall in the average–good category, with the combination of weakness plane interaction, poor mining practices, and high stress levels, a rating downgrade of up to 26 can result. This places these panels into the average and average–poor categories, see Table 12. Even though the ground conditions may appear to be 'good', with incorrect mining practices, which are not limited to blasting alone, these values are detrimentally affected and result in poorer ground conditions, which become more difficult to control. Falls of ground occurred in working places that fall under the 'good' category and therefore, it must not be assumed that falls of ground occur only in those areas with poorer conditions. Complacency in terms of standard mining practices must be avoided.

Conclusion

The research carried out has shown that the MRMRVCR rock mass classification system is effective in quantifying the basic rock mass conditions in a deep-level mine. The system is robust and adequately quantifies the rock mass conditions within which mining takes place, giving the user and production personnel a better understanding of the rock mass quality, the effects of interacting weakness planes and their frequency of occurrence, and the effects of mining. The results of the research show that, from the data collected at the mine, the RMRVCR value range is 54–76 and the $MRMR_{VCR}$ value range is 32 – 57. This confirms that conditions

Table 13

Summary of the underground investigations

Workplace	BASELINE	1	2	3	4	5	6	7
Workplace type	Breast panel	Breast panel	Raise tunnel	Breast panel	Breast panel	Breast panel	Ledging panel	Breast panel
Investigation type	BASELINE	F.O.G	Pre-ledge inspection	F.O.G	Pre-work assessment	F.O.G	Routine panel audit	Routine panel audit
Joint sets	1	1	1	1	1	1	1	1
Fracture sets	2	1	1	1	1	1	1	1
RMRvcr	68	69	69	74	64	74	73	77
$MRMR_{vcr}$	46	38	57	46	52	41	49	48
Workplace	**8**	**9**	**10**	**11**	**12**	**13**	**14**	**15**
Workplace type	Breast panel	Breast panel	Breast panel	Breast panel	Breast panel	Breast panel	Breast panel	Breast panel
Investigation type	Poor ground condition investigation	Poor ground condition investigation	F.O.G Follow-up	Poor ground condition investigation	Poor ground Ccndition investigation	F.O.G	F.O.G	Fracture mapping
Joint sets	2	2	2	1	1	1	1	0
Fracture sets	3	2	2	1	1	1	3	3
RMRvcr	54	74	67	76	76	57	65	67
$MRMR_{vcr}$	32	49	37	43	44	46	40	41
Workplace	**16**	**17**	**18**	**19**	**20**	**21**	**22**	**23**
Workplace type	Breast panel	Breast panel	Breast panel	Breast panel	Breast panel	Breast panel	Breast panel	Breast panel
Investigation type	Pre-work	Pre-work	DMR visit	FOG investigation	Poor ground investigation	FOG investigation	Poor ground investigation	FOG
Joint sets	2	1	0	2	1	2	1	0
Fracture sets	1	2	1	1	1	2	2	3
RMRvcr	63	62	80	67	70	58	65	63
$MRMR_{vcr}$	32	39	62	43	51	37	33	42
Workplace	**24**	**25**	**26**	**27**	**28**	**29**	**30**	
Workplace type	Breast panel	Breast panel	Breast panel	Breast panel	Breast panel	Breast panel	Breast panel	
Investigation type	FOG investigation	FOG investigation	F.O.G	F.O.G	Poor ground condition investigation	F.O.G	Accident investigation	
Joint sets	0	1	1	1	1	1	0	
Fracture sets	3	3	2	2	1	2	3	
RMR_{vcr}	57	60	61	69	71	67	59	
MRMR	29	31	35	42	44	45	36	

throughout the mine vary, which is expected, due to the nature of deposition of the reef and extrusion of the lava hangingwall. The occurrence of natural and man-made factors substantially affects these values. A correlation can be drawn from the $MRMR_{VCR}$ values and FOGs where it is noted that in the dataset the values range from 46 (maximum) to 29 (minimum), further emphasising the effects of mining on the rock mass condition. Consideration should be given to the MRMRVCR system in proactively reacting to varying conditions in a working place to reduce the number of falls of ground that occur at the mine. Further research with the system could identify appropriate support regimes corresponding with the different conditions encountered, before they become worse or result in a fall of ground.

- The system remains simple, which Laubscher (1990) regarded as important. It is easy to use, with only a few important factors, which significantly influence the condition of the rock mass, to consider.
- The way in which the system has been set up allows for easy observational points in a mining panel with reference to the panel face, from which basic joint and fracture parameters can be determined.
- This system can easily be used by members of rock mechanics and geology departments and helps with the understanding of the rock mass and its reaction to mining.

It is envisaged that this system will be in continuous use at the mine in the future, with additional data being added to the system. To further simplify the system for the user, an approach similar to that of the GSI system should be investigated to create a map or image of the different conditions which could be used when conducting underground mapping. This will allow the system to be refined further, confirming its applicability in the narrow tabular orebody mining environment.

References

Barton, N. 2002. Some new Q-value correlations to assist in site characterisation and tunnel design. *International Journal of Rock Mechanics and Mining Sciences*, vol. 39, pp. 185–216.

Barton, N., Lien, R., Lunde, J. 1974. Engineering Classification of Rock Masses for the Design of Tunnel Support. *Rock Mechanics*, vol. 6, no. 4, pp. 189–236.

Bieniawski, Z.T. 1973. Engineering Classification in Jointed Rock Masses. *Civil Engineer in South Africa*, vol. 15, no. 12, pp. 335–343.

Bieniawski, Z.T. 1989. Engineering Rock Mass Classifications: *A Complete Manual for Engineers and Geologists in Mining, Civil, and Petroleum Engineering*. New York: John Wiley & Sons.

Deere, D.U., Deere, D.W. 1989. *Rock Quality Designation (RQD) after Twenty Years*. Gainesville, Florida: Deere (DON U) Consultant.

Dunn, M.J., Hungwe, G. 2004. The application of a rock mass rating system at Tau Lekoa Mine. Pert: Australian Centre for Geomechanics.

Dunn, M.J., Stacey, T.R. 2006. Stable pillar spans at Tau Lekoa Mine. *Proceedings of the 41st Rock Mechanics Symposium - "50 years of Rock Mechanics - Landmarks and Future Challenges". 06-1120*. Golden, Colorado: American Society for Rock Mechanics, ARMA/USRMS 06-1120.

Güler, G. 1996. Measurement and Prediction of the Rockmass of the Ventersdorp Contact Reef Stopes. (pp. 1071-1078). Turin, Italy: *ISRM International Symposium - EUROROCK 96*.

Haines, A., Terbrugge, P. J., Carrieri, G. 1991. Preliminary Estimation of Rock Slope Stability Using Rock Mass Classification Systems. (pp. 887-892). *Proceedings of the 7th ISRM Conference, Aachen, Germany: ISRM*.

Handley, M.F., de Lange, J.A., Essrich, F., Banning, J. A. 2000. A Review of the Sequential Grid Mining Method Employed at Elandsrand Gold Mine. *Journal of the Southern African Institute of Mining and Metallurgy*, vol. 100, no. 3, pp. 157–168.

Harmony Gold Mining Company Limited. (2019). Mandatory Codes of Practice to Combat Rockfall and Rockburst Accidents for Harmony Gold Mine - Kusasalethu. Carletonville: Harmony Gold Mining Company Limited.

Hoek, E. 1999. Putting numbers to geology - an engineer's viewpoint. *The Quarterly Journal of Engineering Geology*, vol. 32, no. 1, pp. 1–19.

Hoek, E. 2006. *Practical Rock Engineering*. North Vancouver: Evert Hoek Consulting Engineer Inc.

Jager, A.J., Ryder, J.A. 1999. *A Handbook On Rock Engineering Practice for Tabular Hard Rock Mines* (1st ed.). Johannesburg: The Safety in Mines Research Advisory Committee.

Jakubec, J., Laubscher, D.H. 2000. The MRMR Rock Mass Rating Classification System in Mining Practice. (pp. 413–421). *Proceedings of the 3rd International Conference and Exhibition on Mass Mining*, Brisbane, Queensland: Australian Institute for Mining and Metallurgy.

Laubscher, D.H. 1977. Geomechanics Classification of Jointed Rock Masses: Mining Applications. *Inst. Min. Metall., Trans., Sect. A*, 86(Jan), A1-A8.

Laubscher, D.H. 1984. Design Aspects and Effectiveness of Support Systems in Different Mining Conditions. *Trans. Inst. Min. Metall., Sect.A, 93* (Mar), pp. A70–A81.

Laubscher, D.H. 1990. A Geomechanics Classification System for the Rating of Rock Mass in Mine Design. *Journal of the Southern African Institute for Mining and Metallurgy*, vol. 90, no. 10, pp. 257–273.

Laubscher, D.H., Taylor, H.W. 1976. The Importance of Geomechanics Classification of Jointed Rock Masses in Mining Operations. *Proceedings of the Symposium on exploration for Rock Engineering*. vol. 1, pp. 119–128. Johannesburg: A.A. Balkema.

Lowson, A.R., Bieniawski, Z.T. 2013. Critical Assessment of RMR based Tunnel Design Practices: A Practical Engineers Approach. Washington DC: Society for Mining, Metallurgy & Exploration.

Minerals Council South Africa. 2024. *Minerals Council South Africa*. Retrieved 04 11, 2024, from https://www.mineralscouncil.org.za/industry-news/publications/fact-sheets

Palmstrom, A. 2005. Measurements of and correlations between block size and rock quality designation (RQD). *Tunnelling and Underground Space Technology*, 20 March, pp. 362–377.

Pells, P.J., Bieniawski, Z.T., Hencher, S.R., Pells, S.E. 2017. Rock Quality Designation (RQD): time to rest in peace. *Canadian Geotechnical Journal*, vol. 54, no. 6, pp. 825–834.

Rehman, H., Ali, W., Naji, A.M., Kim, J., Abdullah, R.A., Yoo, H. 2018. Review of Rock-Mass Rating and Tunneling Quality Index Systems for Tunnel Design: Development, Refinement, Application and Limitation. *Applied Sciences*, vol. 8, 1250, pp. 1–27.

Roberts, M.K., Schweitzer, J.K. 1999. Geotechnical Areas Associated With the Ventersdorp Contact Reef, Witwatersrand Basin, South Africa. *Journal of the Southern African Institute for Mining and Metallurgy*, vol. 99, no. 3, pp. 157–166.

Ryder, J.A., Jager, A.J. 2002. *A Textbook on Rock Mechanics for Tabular Hard Rock Mines* (1st ed.). Johannesburg: The Safety in Mines Research Advisory Committee.

Stacey, T.R., Gumede, H. 2007. Measurement of Typical Joint Characteristics in South African Gold Mines and the use of these Characteristics in the prediction of rock falls. *Journal of the Southern African Institute of Mining and Metallurgy*, vol. 107, no. 5, pp. 335–344.

Toper, A.Z., Janse van Rensburg, A.L., Milev, A.M., Noble, B.R. 2003. *Criteria for Preconditioning at Varying Stoping Widths in Different Geotechnical Areas (GAP 811)*. Johannesburg: CSIR Division of Mining Technology.

Watson, B.P. 2004. A Rock Mass Rating System for Evaluating Stope Stability on the Bushveld Platinum Mines. *Journal of the Southern African Institute of Mining and Metallurgy*, vol. 104, no. 4, pp. 229–238. ◆