

https://dspace.org/

Womedy and its women: How female comedians confront and perform gender within dress and costume, in their stand-up performances

Florentino, Gabriella

2024

University of the Witwatersrand, Johannesburg

https://hdl.handle.net/10539/44687

Florentino, Gabriella. (2024). Womedy and its women: How female comedians confront and perform gender within dress and costume, in their stand-up performances [Masters dissertation, University of the Witwatersrand, Johannesburg]. WIReDSpace. https://hdl.handle.net/10539/44687

Downloaded from a DSpace repository. https://dspace.org/

Womedy and its women: How female comedians confront and perform gender within dress and costume, in their stand-up performances

DISSERTATION

Submitted in fulfilment of the requirements for:

Degree of Master of Arts (Theatre and Performance)

of

UNIVERSITY OF WITWATERSRAND

WITS SCHOOL OF ART

GABRIELLA FLORENTINO

1724397

JUNE 2024

PLAGIARISM DECLARATION

Name: Gabriella Florentino

Student number: 1724397

Course: DRAA8004A Ma by Research, Theatre and Performance, Wits School of Arts

Supervisor: Fiona Ramsay

Plagiarism declaration

I know that plagiarism is wrong. Plagiarism is to use another's work to pretend that it is one's own.

I have used author date convention for citation and referencing. Each significant contribution to and quotation in this essay/thesis from the work or works of other people has been acknowledged through citation and reference.

This essay/thesis is my own.

I have not allowed and will not allow anyone to copy my work with the invention of passing it off as his or her own.

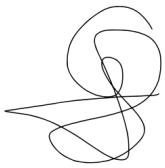

13 JUNE 2024

Signature Date

TABLE OF CONTENTS

PLAGIARISM DECLARATION
TABLE OF CONTENTS
Abstract
ETHICS WAIVER
ACKNOWLEDGEMENTS
CHAPTER 1: Introduction
CHAPTER 2: Literature review
2.1 What is stand-up comedy, and where did women's humour start?
2.2 Performing marginality
2.3 Dress, art, and society
2.4 Theoretical frameworks
2.4.1 Semiotic analysis
2.4.2 Gender performativity
Sex/gender: Feminist and phenomenological views
Binary genders and the heterosexual contract
Feminist theory: Beyond an expressive model of gender
2.5 The Fashioned Body
CHAPTER 3: The current climate of womedy – women's stand-up comedy
4.1 Aims and Objectives
3.1 What is stand-up comedy?
3.2 Addressing gender stereotypes … wrecking the wealth of gender stereotypes
3.3 Womedy: Subverting expectations through personal narrative and the audience-performer relationship
3.4 Intersectionality
CHAPTER 4: Methodology and case studies
4.1 Participants, validity and selection process
4.2 Limitations
4.3 Research procedure and data management
PART A: THE SUMMARY
PART B: THE SEMIOTIC ANALYSIS
PART C: THE PERFORMANCE OF GENDER
PART A: THE SUMMARY
PART B: THE SEMIOTIC ANALYSIS
PART C: THE PERFORMANCE OF GENDER
4.5 Ethical considerations
4.6 CASE STUDY 1: Amy Schumer: Emergency Contact, June 2023
PART A: Summary of Amy Schumer in Emergency Contact
PART B: Semiotic analysis of Amy Schumer
PART C: Gender performativity of Amy Schumer

4.7 CASE STUDY 2: Ali Wong, Don Wong, 14 February 2022
PART A: Summary of Ali Wong in Don Wong
PART B: Semiotic analysis of Ali Wong, Don Wong
PART C: Gender performativity of Ali Wong, Don Wong
4.8 CASE STUDY 3: Sam Jay, 3 in the Morning (2020)
PART A: Summary of Sam Jay, 3 in the Morning
PART B: Semiotic analysis of Sam Jay, 3 in the Morning
PART C: Gender performativity of Sam Jay, 3 in the Morning
CHAPTER 5: Discussion
5.1 Summary
5.2 Semiotic analysis
Amy Schumer, Emergency Contact
Ali Wong, Don Wong
Sam Jay, 3 in the Morning
5.2 Comparison of findings
5.2.1 Comparison of the summary findings
5.2.2 Comparison of the semiotic analysis findings
5.2.3 Comparison of gender performativity findings
5.3 Limitations
5.4 Future research recommendations
5.5 Practical implications of the findings
5.6 Main outcomes from findings
CHAPTER 6: Conclusion
BIBLIOGRAPHY
APPENDICES
APPENDIX 1: Honours article
APPENDIX 2: Netflix comedy specials
APPENDIX 3: Tabulated outcome of findings

Abstract

This research is grounded in gender, comedy and costume and investigates links that weave through humour and gender. Is costume the link? This research grew from the perception that 'men are funnier than women' or that 'women aren't funny', as mentioned by Jerry Lewis and Christopher Hitchens. This perception held female comedians out of the comedy industry. However, this is changing as more female comedians are rising to fame. This study examines this perception and stereotypes to explore how female comedians are changing this perception. The research uses the theoretical framework of a semiotic analysis of ten signs and a gender performativity lens inspired by Judith Butler to determine their role in sanctioning these perceptions. Through three case studies, this research examines gender inequalities and differences. I explore the practice of women's stand-up comedy and its space by comparing three female comedian's performances to determine whether female comedians perform gender.

Keywords: comedy, costume, female comedians, gender performativity, semiotic analysis, stereotypes

ETHICS WAIVER

UNIVERSITY OF THE WITWATERSRAND, JOHANNESBURG

HUMAN RESEARCH ETHICS COMMITTEE (NON-MEDICAL)

Registration number: REC-101114-044

22 August 2023

Re: Ms. Gabriella Florentino (1724397)

Waiver letter number: HRECNMW23/09/01

To whom it may concern,

Ms. Florentino is a registered Masters student at the School of Arts at the University of the Witwatersrand, Johannesburg. This letter is to confirm that, at the time of writing, Ms. Florentino does not need ethical clearance for her Masters study entitled *'Womedy and its Women: how do female comediennes confront and perform gender through dress, costume and content, in their stand-up performances (focusing on current Netflix Comedy specials)'*. This decision has been reached based upon a description of the project supplied by Ms. Florentino to the University Human Research Ethics Committee (Non-Medical), which has been evaluated by the Chairs and Deputy Chairs. If, however, if Ms. Florentino changes the methods of data collection and analysis for this study, this decision may no longer be valid. If such changes take place, this should be communicated to the University Human Research Ethics Committee (Non-Medical) as soon as possible. This waiver letter is valid until 21 August 2026.

Please feel free to contact me should you require any further information.

Thank you.

Yours sincerely,
S Schoeman

Shaun Schoeman (Administrative Officer)
Solomon Mahlangu House, 10th Floor, Room 10004, Jorissen Street, Braamfontein, Johannesburg
Private Bag 3, Wits 2050
T + 27(0)11 717 1408 | **E** Shaun.Schoeman@wits.ac.za | hrec-medical.researchoffice@wits.ac.za
www.wits.ac.za/research/about-our-research/ethics-and-research-integrity/

ACKNOWLEDGEMENTS

I acknowledge my supervisor, Fiona Ramsay, for forging a way to assist me in researching what I set out to research. The topic is significant, and I thank you for your help in finding an academic route to approach this.

To my Florentinos, la mia famiglia, thank you for always lending an empathetic ear to my stresses and my excitement throughout this journey, with a special thank you to my mother for encouraging endurance, not only by words but through leading by example.

I dedicate this piece to Michelle Kolver. I wholeheartedly believe a master's thesis would have been only one of your many endeavours; consider this your thesis, too.

CHAPTER 1: Introduction

I want to start the study with the words of American philosopher and educator Susanne Katherina Langer, who specialises in writing about the influences of the arts on the mind. She reminds us:

"Comedy comes from Comus and *komos,* linked with springtime revelry and fertility, a celebration of endurance as opposed to tragedy, which celebrates death" (Langer, 1954).

This statement implies much about comedy as the opposite of tragedy and their interdependence; without tragedy, there can be no comedy.

At the forefront, this thesis addresses and disputes the mindset that 'women aren't funny'. However, upon research, comedy has many aspects, such as what it requires, how it is achieved, and what attributes assist in its success. I refer to the simplistic and brave practice of publicly performing a joke with the hope of receiving a successful laugh in response.

I found it easier to assess and analyse comedy by deconstructing the principle and practice of comedy, and I decided to view the phenomenon of comedy in the context of female stand-up comedians.

This thesis studies three female stand-up comedians within the same age group but from different race groups to better understand the dynamics of stand-up comedy and the gender inequalities therein.

In the spirit of stand-up comedy, which mirrors casual conversation among friends, I discuss the personal motivations behind my research, which began with the infamous sketch comedy show *Saturday Night Live*, which I was exposed to ten years ago as a twenty-year-old South African woman. The boundless creativity of costume design, character creation, and development drew me to the show. *Saturday Night Live's* widely acknowledged comedic content and broad global reach did not limit issues, expressiveness, language, costume, or character. I became acquainted with the successful, recurring characters and studied the structure and format of the show, which encouraged an interest in exploring my comedic writing. I became aware of comedians such as Tina Fey, Amy Poehler, Kristen Wigg, Maya Rudolph, and many more.

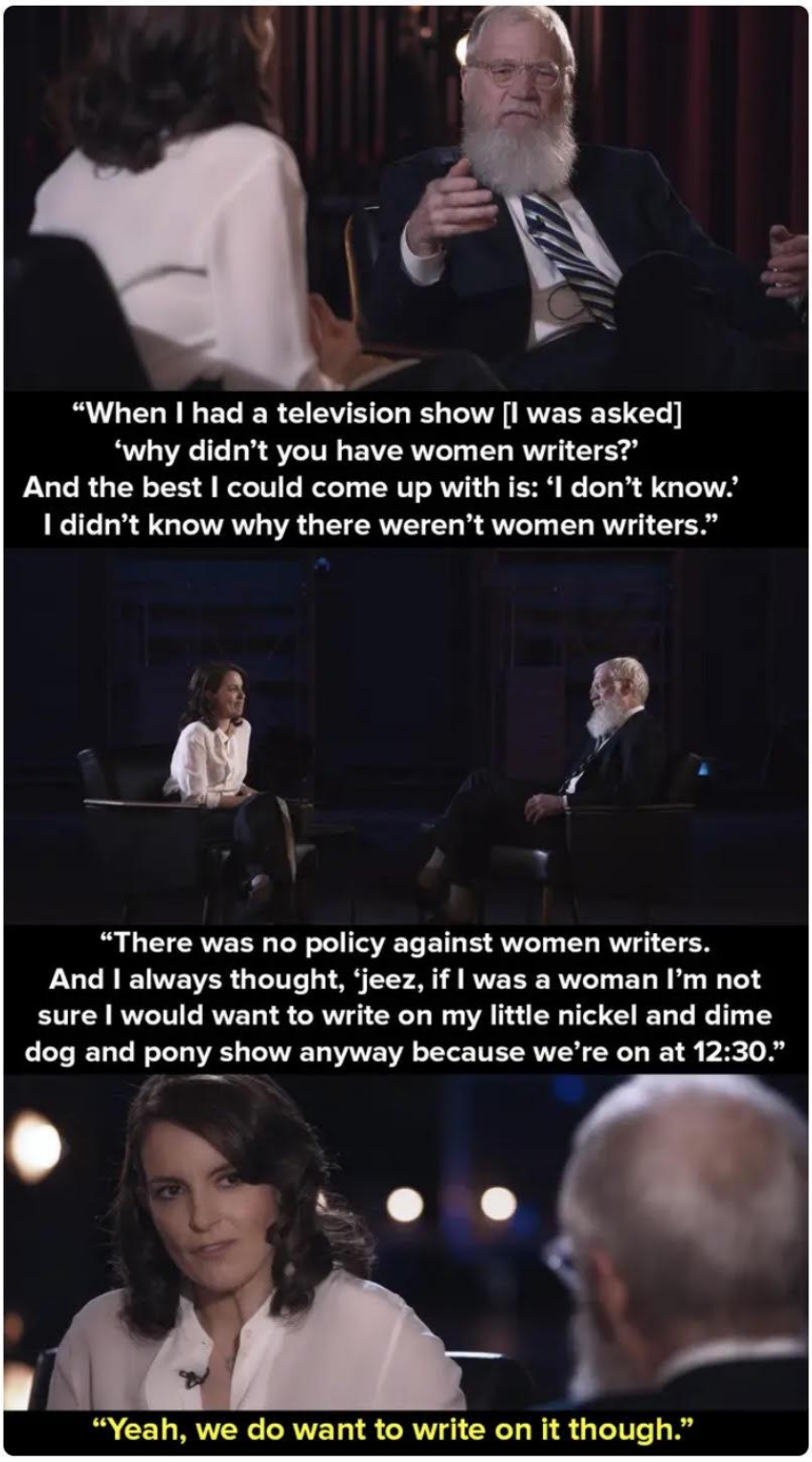

Figure 1: Worldwide Pants (2018). *BuzzFeed,* Tina Fey Insists Diversity is Better for TV Writing Room

After widespread research on female comedians, I found the stereotype that ‘women aren’t funny’, which Tina Fey discusses in her memoir *Bossypants* (2011). Female writers (when she wrote for *Saturday Night Live*) were not afforded equal opportunities in the writers' room to write jokes. She explains that this was due to a lack of understanding of the female perspective, which meant the jokes did not appeal to the majority (men) of the writers' group. Fey also appeared on David Letterman’s podcast *My Next Guest Needs No Introduction* in 2018 and discussed that once the *Saturday Night Live* writing team became populated with more diverse writers from different races, cultures, sexualities, and backgrounds, the jokes that were being written became more globally understandable and acknowledged. This propelled my academic research. As a fashion designer specialising in costume design, I sensed a strong link between how the comedians presented themselves and their costumes and how this defined gender.

The entertainment of comedy is what sparked my interest. I enjoyed stand-up comedy as a young girl, particularly the comedy of South African comedian Marc Lottering. However, as I got older, I discovered comedy has greater importance socially and effectively as a social tool for activism, as it generates social awareness, disseminates information, and encourages people to engage with taboo topics often not discussed. Although comedy appears light-hearted and irreverent, it offers critical responses to social ills and inequalities. Comedy has a variety of functions and can alleviate loneliness by encouraging social dialogue. It propelled me to study comedy further to understand the genre and form, specifically in marginalised groups, and to foster understanding, appreciation, and an ability to relate to each other. Therefore, I aim to interrogate how comedy works and unearth its importance.

In the current comedy industry, there are comedians of diverse identities; queer, transgender, non-binary, and others. However, the implication is that women cannot generate humour, suggesting that gender defines success. I assert that based on the growing diversity of comedians in terms of race, culture, gender identity, and sexuality, the gender debate will become irrelevant as it may struggle to travel alongside the fast-evolving nature of gender identity.

CHAPTER 2: Literature review

In 'Why Women Aren't Funny', Christopher Hitchens (2007) explains that men prefer women as their audience rather than as rivals. With this simple and bold statement, it is safe to assume that Hitchens is already making the presumption that men are inherently and fundamentally funny by nature and that the comedic circle perhaps already has its centre. Hitchens (2007) also adds that women appeal to men biologically (through appearance and, in turn, attraction), and it is, therefore, unnecessary for women to be funny. Does this insinuate that women attempt humour and comedy in the hopes of appeasing men and seeming attractive to the opposite sex? Is that why women want to be funny? Is successful comedy's objective and end goal to ascertain desire from the opposite sex? Or does a responsive laugh define successful comedy?

However, Hitchens (2007) suggests another perspective by recalling that the earliest forms of comedy were derived from the mockery of authority. Hitchens (2007) recalls the statement of a woman who asks a bishop what the difference is between the sexes, to which the bishop replies, "I cannot conceive". Hitchens (2007) implies that men are frightened by the fact that women can "produce babies", and this insinuates a sense of authority. Therefore, is it not a compliment that women become the subject of the joke because the joke targets authority? In other words, being a woman infers authority and power. It is essential to note the satirical nature of Hitchens's writing as he often writes to provoke. However, the content of this article, in particular, speaks to the notions in this dissertation.

2.1 What is stand-up comedy, and where did women's humour start?

Political scientist Ian Brodie (2008, p.153) believes stand-up comedy is a form of talking and suggests context and content generate "reaction, participation and engagement" among performers and audiences. Comedy reveals a witty ability to raise taboo subjects due to its unique performer-audience relationship. However, if the content being addressed is unfamiliar or unrelatable, the audience could be made to feel uncomfortable, offended, or scared. The nature of comedy is to embrace diverse content that broaches taboo subjects based on the performer-audience relationship and wit (Brodie, 2008, p.154). Comedy is often overlooked and unacknowledged due to the art form being informal and flippant in delivery.

While this unique performer-audience relationship contributes to comedy as an intimate experience, it can assist in determining the success of the comedy and the reception. Brodie (2008, p.155) claims that comedy works in states of equilibrium and disequilibrium. When the audience laughs, the equilibrium "has been restored". From this, the performer can deduce that the audience "gets it" (Brodie 2008, p.155) because the stand-up comedian is usually performing *with* the audience rather than *for* them (Brodie 2008, p.153). Brodie (2008) uses the terms equilibrium and disequilibrium to illustrate the life cycle of a joke. As the audience members laugh at the performer's joke, an equilibrium is established, and balance has been established. The joke successfully concludes when the audience responds in laughter to it, and the reaction creates equilibrium. If a joke is being performed *for* the audience, it would suggest that the performer does not require a response and that the joke exists in a state of disequilibrium.

Historically, stand-up comedy has been performed by men and has been rooted in masculine, androcentric and sometimes aggressive characteristics; comedy is known to provoke, shock and use vulgar language, which are stereotypical characteristics associated with men more so than women. When women entered the comedy space, some men took issue with adopting masculine attributes (Brodie, 2008, p.153). Women exhibiting masculine, aggressive or assertive behaviour in performance is stereotypically unfamiliar and could elicit poor audience response because the performance and content are less relatable (Brodie, 2008, p.153). Professor of English and American Literature Sevda Caliskan (1995, p.53) suggests that because of a woman's concrete and possibly enforced social foundation, their comedy becomes more gender-specific.

Stereotypes generally place men in positions of power and women as observers. For example, a traditional and archaic cliche of a female homemaker where the woman ensures the house is clean and dinner is ready for her breadwinning husband. The man arrives home to dinner and loves female attention (which, arguably, he expects), with her reinforcing this behaviour. Caliskan (1995, p.54) introduces the concept of "unauthorised" content, adding that because of the positions of power, the "unauthorised" content, on behalf of the women as the oppressed party, could be the homemaker woman asking the breadwinner man to cook dinner because she is tired.

In ‘The Art and Craft of Female Humour’, Andrea Greenbaum (1997, p.119) discusses the craft of female humour and cites American academic and humourist Regina Barreca’s theory of ‘good girls don’t’ humour. This theory discusses scenarios of women talking about “going to second base with a man”, suggesting and possibly asserting that women find humour in the same jokes as men (Greenbaum, 1997, p.119).

It is plausible that a man might chuckle at a woman asking him to make dinner, as this is unauthorised content, the basis of Barreca’s theory of ‘good girls don’t’ humour. In other words, unauthorised content does not adhere to gender stereotypes (the woman asking the man to make dinner that the man has expected her to make). As the man laughs at the joke and its unauthorised content, it gives the woman a licence to allow them both to laugh. Greenbaum (1997, p.119) explains that the humour of women can often be more subtle than male humour, citing women’s studies and communication scholar Cheris Kramarae (1996) to support this:

> Anne Beatts believes that girls learn … how to laugh at the jokes of males but [also] to stifle any clever remarks of their own.

Comedy, when used in this way, signals the origin of female humour and how performing female humour falls within performing marginality. In the following subsection, I support and explore this statement further

2.2 Performing marginality

Joanne R. Gilbert (1997, p.317) articulates that performers select pieces or characteristics of themselves to perform for and with the audience. Gilbert (1997, p.317) explains that because women are a marginalised group, a female comedian addresses her perceived marginality by confronting, highlighting, and performing this marginality on stage through a construct of presenting herself as a victim. Gilbert (1997, p.317) explains that this is a tool women use to condense their power by confronting a perceived lack of control and using self-deprecation and self-deprecating jokes to address this powerlessness using notions of oppression and stereotypes. For example, in Eliza Shlesinger’s Netflix comedy special *Hot Forever* (2022), Shlesinger says to her male audience, “If your girlfriend’s dragged you along for the show… I have your money”. In this joke, Shlesinger suggests that female comedians only make

women laugh (often not their male companions). Therefore, Shlesinger asserts her power, saying that despite men not wanting to attend her show, they have paid for tickets, and thus, Shlesinger has their money.

Another example is when comedian Amy Schumer discusses puberty in her Netflix comedy Unique *Growing* (2019), in which she compares the puberty processes of each gender. Schumer explains that when a girl starts menstruating, one of the first things she is taught is to keep it confidential and that (stereotypically) no one should be aware that a woman has started her period. However, when male adolescents embark on puberty and begin to experience erections, men are not taught to hide it (Schumer, 2019). She goes on to explain that traditionally, as men age, an erection is something with which women are often confronted. Schumer reflects on the outcome if women were not taught to conceal the onset of menstruation, simultaneously putting her hands between her thighs to gesture that she is removing a tampon. She waves the invisible but used tampon slowly from side to side, which could be shocking, but undercuts this by using a diversion tactic, saying, "You are feeling very sleepy", utilising the tampon as a tool for hypnosis. The joke is based on the cliché and assumption that women should not discuss feminine hygiene publicly and likens a used tampon to a hipnosis tool. Schumer uses self-deprecating humour by simulating pulling out a tampon to address the stereotype, foregrounding it to encourage one to view it differently. With this joke, it can be assumed that Schumer is asserting a used tampon could have the same level of impact as hypnosis.

Gilbert (1997, p.318) continues by discussing identity performance, noting that critics often do not understand or appreciate self-deprecating humour because it perpetuates stereotypes rather than discourages them. However, he counters this by explaining that performers, such as Phyllis Diller, successfully performed marginality through her comedy by bringing these stereotypes to the forefront, deriding them, and encouraging stereotypes to become a topic of discussion and enquiry (Gilbert, 1997, p.319). The purpose of self-deprecating humour is to lampoon societies and groups that have created the stereotypes and those who adhere to these (Gilbert, 1997, p.319). For example, in the stand-up routine *Look at You* (2022), comedian Taylor Tomlinson explains that she has stopped watching porn because every time she watches porn, she thinks, "So now I have to shave there too?" The joke addresses the high-

level social standards forced upon women and suggests that this hinders performer expression. In addition, women stereotypically do not watch porn or discuss intimate bodily issues, such as feminine grooming. The fact that Tomlinson addresses both stereotypes suggests that she performs self-deprecating humour to encourage audiences to question these. Chapter 4, section 3 discusses performing marginality further to contextualise female humour and the current climate of comedy.

An important link here might be in the role of the trickster, and although the role is conveyed in theatre as a scripted, adorned, fully formed character, the derivation of the trickster and its purpose might perpetuate a connection with self-deprecating humour. University of Romania scholar Ioan-Alexander Gradinaru (2013, p.85) explains that the trickster is defined by its duality and ability to become "ambiguous and equivocal", and therefore a trickster can exist in any human society or community. The trickster (also called the clown) delivers "malice, foolery, and cunningness", as well as intellect (Gradinaru, 2012, p.85). Due to their intelligence, the trickster holds a particular agency of power or influence and can direct an audience toward a desired outcome. This also speaks to the unique performer-audience relationship, which I believe has translated into the art of stand-up comedy. A good example falls into the observation by Dave Chapelle when telling the women in his audience in *The Bird Revelation* (2018) that although he stands with the feminist movement, women are going about the movement inefficiently because "fear does not allow for long-lasting change". He adds that soon, the movement will suffer because this fear encourages discomfort and, ultimately, a need for retaliation. Chapelle, in his Netflix comedy special *Sticks and Stones* (2019), filmed one year later, recalls how stringent laws have become regarding women's reproductive rights and alludes to his mentioning this previously (in *The Bird Revelation)*, saying he was fitting that the feminist movement would retaliate. This dialogue and content have generated a long performer-audience relationship for Chapelle. Chapelle demonstrates performer intelligence and a certain cunning in the 'I told you so' nature of the dialogue.

In stories, the prominent purpose of a trickster is undeniable as they hold a position of comic wealth, using comedic characteristics to disrupt social and cultural norms (Gilbert, 2012, p.86). As Gilbert (2012) previously explained, self-deprecating humour is about lampooning society's rules and those following them. Notable is that while a trickster holds some degree

of power, the aim is not to be seen as the hero but rather the anti-hero striving to debunk the norms of the stereotypical hero (Gradinaru, 2012, p.86). For example, a stereotypical hero is often well-received and loved by the audience, while the trickster appears bitter and calculated. This above example is well described through a direct quote from Gradinaru (2012, p.89):

> His works? A blasphemy. His deeds? Blasphemous. On the other hand, the effects of his actions are countless and impossible to grasp in one analysis.

Gradinaru (2015, p.89) introduces the *jivan mukta.* According to Hinduism, this person (trickster) can shirk physical and figurative shortcomings, and the *jivan* (trickster) becomes free because it is viewed as a spirit or entity rather than a human. (Gradinaru, 2015, p.89). Gradinaru (2015) elaborates that the trickster is a mediator between people from two different worlds and identifies these worlds as the wealthy and the poor.

Gradinaru (2015) refers to *jivan mukta* as relaying the framework by which the trickster can deconstruct social and cultural norms by mediating between the sacred and the citizen. This reinforces the notion that stand-up comedy acts as a good form of communication to create awareness by allowing two different worlds to come together. Gradinaru (2015) says that the *jivan mukta* is afforded the capability of evading physical expectations, and their figurative shortcomings are shirked; I believe this contextualises the way stand-up comedy performers can address discreet or taboo topics, purely based on the purpose and function of stand-up comedy. The stand-up comedian, who functions as the *jivan mukta*, is afforded the privilege of being exempt from physical expectations. In Ricki Gervais' Netflix comedy special *Supernature* (2022), he recalls a time in his childhood when his school bus driver was accused of being a paedophile. Gervais's mom asked him if he was ever touched inappropriately by the bus driver, and Gervais said no, to which his mother responds, "Well, he couldn't have fancied you much then". Gervais discusses this statement and that his mom used it to annoy him about not being attractive enough to be appealing to a paedophile. One might suggest that Gervais shirks his responsibility for being directly offended (as not being beautiful enough to be touched by a paedophile arguably might cause discomfort or outrage). By putting the observation in his mother's words, Gervais comments on his mother's statement, which effectively exonerates Gervais.

Blasphemy can be a successful tool for the trickster, as it is arresting and shocking and often plants new ideas in the audience members' minds (Gradinaru, 2015, p.90). However, blasphemy is usually accompanied by mockery, abuse, criticism, and adversity, which feeds the trickster; indeed, mockery is welcomed above ignorance (Gradinaru, 2015, p.90). This calls to mind outspoken comedian Chelsea Handler in her Netflix comedy special *Revolution* (2022), where she admits that during the pandemic, she went looking for sex. She found a masterful plan to filter her "possible penetrators" by buying an at-home COVID test. Handler staggered the possible penetrators' arrival time at her house because, as she states, "she's not an idiot", and she was well aware they would not all pass her personal test. Swabbing the men and plugging the tester swab into the cartridge, she would chat with the men from six feet away for 30 minutes while the sample was being processed to see if it was positive for COVID. She adds that if she noticed any of the applicants sporting a pinkie ring, she would inform the man that he tested positive for COVID and dismiss him to proceed to the next "possible penetrator". This example demonstrates mockery being preferred to ignorance; Handler has a clear plan of action, a backup plan (her staggered call times), and her 30-minute interview to get to know the male companion. She even uses mockery and criticism to help her narrow down her penetrator by excluding anyone wearing a pinkie ring.

Gradinaru (2015) cites Jung (2006) and explains Jung's suggestion that the modern-day trickster keeps the past firmly in the past but discusses history sufficiently for it to enter one's consciousness. This may perpetuate conscious discrimination, as in this example, where historically established stereotypes still exist in modern society. It is interesting to note that the effects of the trickster on their subjects are sometimes unexplained (or only revealed at the end of the play or stand-up routine). However, the trickster is often not acknowledged and usually leaves an audience member unaware of their intellect (Gradinaru, 2015, p.95). This reveals how stereotypes are addressed and lampooned in stand-up comedy. Stereotypes are further discussed in Chapter 4.

2.3 Dress, art, and society

Dress and costume are arguably one of the biggest culprits for perpetuating stereotypes, from the most straightforward practice of wearing pink to signify that the wearer is a woman to wearing a white lab coat to convey importance and even achievement. Clothing and costume,

in its most basic form, hold helpful information about the wearer, both consciously and subconsciously.

Geoffrey Squire (1975, p.12) explains that evolutionary changes in one's appearance influence how people view the world because of a compelling connection between the world we live in and what we choose to wear. One's dress, attire or outfit can denote where in the world a person exists, as well as the era, time, or period, which are revealed in fashion, dress, and costume design. For example, in her Netflix comedy special *Hard Knock Life* (2018), Ali Wong wears a tightly fitted dress that reveals her pregnant belly. The tightly fitted dress enhances the form of her body and her pregnant belly and informs the viewer that the performance took place during Wong's second pregnancy. Squire (1975, p.49) defines dress as the outcome of creative imagination that transforms or translates human experiences into art that survives any age or period and is possibly a continuous revolution of a person's aspirations.

Squire (1974, p.13) suggests that adornment is the primary purpose for clothing beyond appearing decent in public, keeping warm or for bodily protection. The dress also serves as decoration for the body and possibly distinguishes humans from animals (Squire, 1974, p.13). This implies that clothing serves an aesthetic purpose rather than a functional one.

Squire (1974: p.14) indicates that modern tradition or fashion practice dictates how much clothing to wear more than the contemporary industry. This could be a nod to a particular fashion trend and its respective style of the year. He hints at the evolution of costume and how it developed, as seen in the codpiece of Ancient Greek theatre, where the codpiece served as a significant part of the performance until women were permitted on stage, after which it began to lose purpose and validity. The prop/costume of the codpiece was used to differentiate the male characters from the female characters in the play because women were not permitted on stage. Men were used to fulfil all characters of the play. The play's male characters wore a codpiece to signify masculinity and that they were portraying a man. Once women were permitted on stage and slowly grew agency upon the stage, the codpiece became redundant as the audience members could establish the genders of the characters themselves and no longer relied on the codpiece for direction.

2.4 Theoretical frameworks

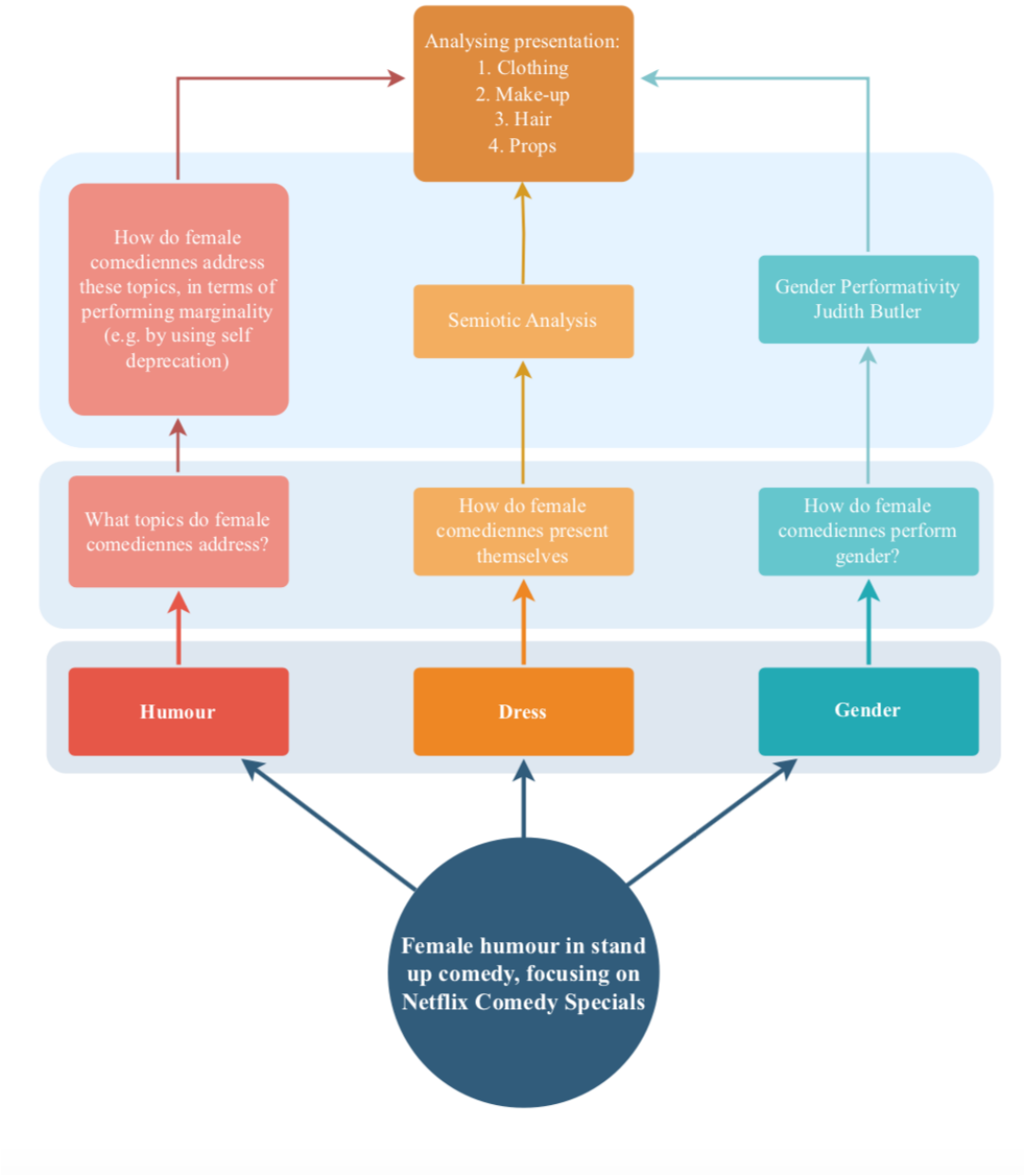

Figure 2: Theoretical framework. Source: Florentino, G (2023). Draw.io.

2.4.1 Semiotic analysis

Professor and novelist Umberto Eco (1977, p.108) introduces the premise of semiotics by using the metaphor of two probable causes of blindness: “blindness by absence and blindness by an excess of light”. In other words, information is around us. However, one needs to be open to receiving and digesting the data and know how to interpret the information. This is

the premise of a semiotic analysis, which I use as a theoretical framework to view and analyse dress/costume.

Eco (1977, p.109) explains that for a new theory to be successful, it must be more precise than before; an approach should not only return an old item to one but return the old item hand in hand with a 'new light' that nurtures an improved perspective from which the old item can be optimally understood. This is crucial to the evolution of dress, defining how certain clothing items had specific roles historically and are subsequently seen in a new light. Here, Vivienne Westwood's (2009) revolutionary re-identification of the corset can be used as an example. Westwood (2009, p.9) adopted lingerie as outerwear to highlight women's oppression and encourage the sexuality of women by wearing corsets and underwear, such as bras over shirts.

In *The Reasons of the Code* (2007), Ulysses Grant reviews Eco's article, *The Theory of Semiotics* (1992), which focuses on two main aspects supporting Eco's semiotic analysis. First, one should consider the foundation and framework of semiotics and include the purpose and meaning of elements of all integral parts. Second, implementing the semiotic analysis imbues the interpretation with intent and meaning. Therefore, put simply, when one sees red, one could interpret the colour as dangerous or as love, depending on a person's current situation and reference or personal views. This is because theory and method can only exist in conjunction, as theory explains beliefs, principles and ethics, and the technique or method produces written communication to validate and recognise the ideas (Eco, 2013, p.2).

In *Definition and Classification of Dress: Implication for Analysis of Gender Roles,* Eichner and Roach-Higgins (1992) confront gender constructs by discussing clothing as particular dresses and ensembles. They note that clothing recounts gender differentiations, focusing on the classification system that clarifies and unifies social findings about dress and gender and where clothing or dress are viewed as "body modifications and body supplements" (Squire, 1974, p.14). In other words, clothing can be viewed as an addition to the body rather than part of the body, as clothing serves to supplement the body.

There are three categories Eichner and Roach (1992) have utilised to classify dress: reconstructing, enclosing, and attached. Both stipulate that the body is not at the forefront,

meaning that a clothed person is simply a gestalt within a body. Essentially, Eichner and Roach (1992) infer that one would have no choice but to conduct mental manipulation to detach body modification effectively. Squire (1974, p.15) supports this thinking when he remarks that clothing cannot be separated from the body as it inevitably holds or signifies sexuality because of how intimately it depends on and interacts with the body, both being valued only in conjunction with each other.

In the book *The Fashion System,* Roland Barthes (1990) uses the 'Written Clothing' chapter to better understand and interpret clothing similarly to semiotic analysis. Barthes (1990) begins by explaining a scenario where one sees a garment in a fashion magazine and notes that there are, in reality, two garments that a person is looking at. First, the 'image-clothing' is the garment photographed or illustrated, and the second garment is the 'language' used to describe the garment. This garment, therefore, becomes 'written clothing' but lives within the same reality as the 'image-clothing' and has limited relations with each other. The association of 'image-clothing' is spatial, and that of 'written clothing' is logical or syntactic. For example, the fused and folded section that is buttoned at the top of a shirt and surrounds the neck is called a collar. 'Collar' is the official term for this section of the garment, while its explanation (which is how one views this section of the garment) is the spatial view of the collar.

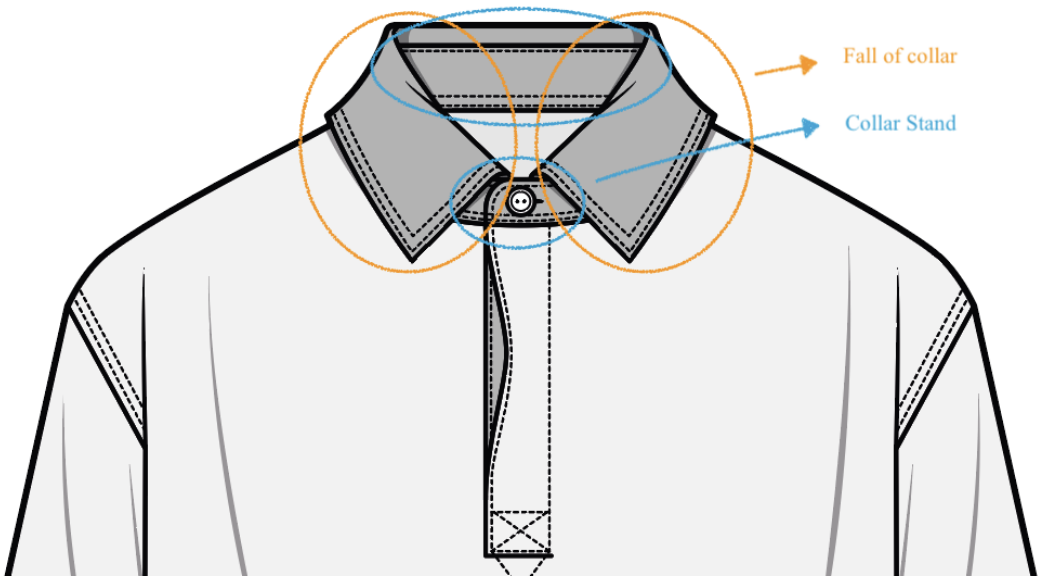

Figure 3: A collar. Source: WGSN (Autumn Winter 2025), Rugby Top style

The image clothing of the neck area is a *collar*. However, the written clothing (noted in orange on the image) is *a collar stand that supports the fall of the collar.*

Semiotics can be summarised as the production of meaning and can be particularly beneficial in studying or analysing performance. Ryan and Ryan (2022, p.2) suggest that theatre is written text which is received physically or emotionally by the audience and that this physical and emotional reception can be supported and interpreted by the time and place of the performance and the time and place outside the performance in the real world. A suitable application of this phenomenon could be how many male comedians are beginning to reference the #MeToo movement, sexual assault, and consent within their performances due to the influx of convicted men being punished or incarcerated for sexual misconduct. In his Netflix comedy special *Sticks and Stones* (2019), Dave Chapelle discusses Louis CK, who has been fined for sexual misconduct and has subsequently suffered a considerable loss of income.

A semiotic is present in both the signifier and the signified, in which the signifier can be further articulated into icons (or a sign that stands for an object by resembling it, such as a picture or a map), symbols (a sign that stands by its object through conventions, as in words or text) and index (a sign that stands by its object through a causal link, like smoke being an index of fire). These signals work as codes and are encoded by a creator, actor, director, writer, or designer and then decoded by the receiver or audience. It suggests differences and modifications exist in the perception of received signals that may depend on the thoughts and perceptions of the audience viewing the performance. In ancient Greek theatre, women were not permitted on stage, and audiences required gender distinctions to be made to digest the story or play. Therefore, young men were used to portray women as young men who had not yet developed muscularity. Adult men would wear codpieces to indicate male characters. Here, the audience was required to interpret that the codpiece was a signifier of a man and a portrayal of a male character, while those not wearing a codpiece were considered women.

In the book *Presentation of Self in Everyday Life,* Erving Goffman's (1990) theory proposes that individuals construct personas for everyday life and generate characters that perform daily activities. However, the celebrity figure presents their true self, which may result in misrepresentation. In the documentary *Gender and Codes*, professor of Communication Sut

Jhally (2007) explains that in *Representation of Self in Everyday Life and Stage Actor*, Goffman (2007) presents representation in the context of women in mainstream advertising. Themes of this research can be seen in the advertising industry, where one discusses the idea of the subject and the viewer, much like stand-up comedy, which is based on the performer and the audience.

Jhally (2007) summarises Goffman's fundamentals of constructing a person in everyday life by explaining that there is nothing natural about gender identity and that specific appropriate and performative attributes (such as a woman sitting crossed-legged or a man emphasising his broad shoulders by holding his straightened arms far from the body as he walks) are adopted by each person to better communicate the self. Jhally (2007) questions further by asking how societies construct gender because the notion of a two-sex and two-gendered society is a social construct.

In *Gender Display*, Goffman (1990) argues that display occurs when a woman is presented in an advertisement for perfume; the relationship between the subject (or woman) and the object (the perfume) can be interpreted as suppression. The product being sold is the perfume, supposedly appealing to women to buy it. However, the woman is merely a vehicle to encourage or promote the sale, implying that the perfume is the fundamental and primary image – the woman is secondary. Jhally (2007) then suggests this theory as performing gender.



Figure 4: Women used in advertisements. *Medium* (2018). Dior/What would you do for Love?

An advertisement for men's cologne uses a good-looking man and a beautiful woman as the subjects, but it seems irrelevant to the product. Her function is as an adjunct to suggest that the man who uses this cologne will get a beautiful woman like the one in the advertisement. This illustrates the relationship between object and subject, where the object in the advertisement uses the woman as the subject; the object embraces power through perfume. Meanwhile, for cologne, the man is the subject who embraces power, and the woman is an adjunct subject – the object (the cologne) embraces equal power status to the subject. There seems to be no space for the woman to hold power in either scenario. Jhally (2007) calls this "what the power of one looking does to the one being looked at".



Figure 5: Men used in advertisements. Fashion Gone Rogue (2014). Doutzen Kroes Goes Naked in the Reveal for Men Calvin Klein Fragrance

To link this back to female comedians, one could interpret the female comedian as the one being looked at (the female subject of many advertisements) and the audience taking the role of the 'looker' in the performer-audience relationship. Some questions arise that need to be addressed in this analysis. In stand-up comedy, does the context being addressed take the role of the subject and the comedian the role of the object and, therefore, secondary to what is being said? Does the allocation of power lie in appearance? Does appearance (or gender display) determine where the power lies? And if so, where would we want the power to be allocated? In the comedian or in what the comedian is saying?

An example is Amy Schumer's Netflix comedy special *Growing* (2019), in which she is pregnant while performing and wears a loosely fitted, long-sleeved, thigh-length navy dress with black boots that end just under the knee. Schumer explains that because of her pregnancy, the shape of her belly button has warped, and she applies two plasters over her belly button instead of only one. Schumer explains that her belly button has protruded or swelled so much that she needs two plasters to remedy the belly button bump that may appear through her clothing. Schumer then reaches for the hem of her dress and lifts her skirt to reveal her belly button with two plasters, to reveal her underwear and pregnant belly. In the performance of this joke, what is more important? The joke that pregnancy has affected her body to the extent that her belly button has become so misshapen that only two plasters can assist in covering it, or that Schumer has willingly shown the audience her underwear? Due to the performer-audience relationship, it is safe to assume that both are equally important. The performer cannot stand without their performance. However, in the article 'The sign of the theatre', comparative theorist of dramatic literature and theatre semiologist Thadeusz Kowzan (1986) provides a meticulous guide to the semiotic analysis of theatre. Kowzan (1986) explains the origin of semiotics as starting when the military used signs to communicate without dialogue. He likens these to illnesses which are diagnosed by symptoms, and the symptoms are determined by semiology (Kowzan, 1986, p.53). In other words, what we see from the symptoms, such as a headache or fever, reveals more information about the disease.

Although the military and the theatre are different practices with different principles, the semiology performs similarly. Kowzan (1986) provides an example of an opera performance,

which includes words, songs, music, scenery, and lighting. During the performance, a world is created when each aspect comes together and communicates efficiently and flawlessly (Kowzan, 1986, p.56). He also explains that theoreticians use the term ‘sign’ to identify or discuss “artistic elements and theatrical expressions”, which enforces those who are involved with the performance (or, as Kowzan (1986, p.56) categorises it: “the “spectacle”) to be either consciously or subconsciously aware of the semiology. In other words, in this instance, one needs to consume and digest the performance through the lens of semiotics: analysing both the sign and the signifier. Kowzan (1986, p.56) suggests that the spectacle or performance is one of the wealthiest ways the sign reveals itself, and as such, the sign of the spectacle is the performance. The sign categorises the spectacle into a more specific practice, such as performance.

Kowzan (1986) provides an example that assists the understanding of semiotics that specifically relates to the theatre, how a person says, “I love you”. Kowzan (1986) identifies the difference between two scenarios in which the signifier of the spectacle can change through performance. The first instance is a man sitting in an armchair, a cigarette in his mouth and his back facing the person he is saying “I love you” to. A second instance is a man standing facing the person he is saying “I love you” to while holding hands. Kowzan (1986) highlights how “facial mimes, hand gestures and attitude” lend greater meaning than the actual text.

In the first instance, the subject smokes a cigarette, indicating he is preoccupied with the ritual of smoking. The subject is sitting down and not looking at the person he is speaking to make eye contact, suggesting that what is being said could be of better importance. Here, the gestures indicate that there is not much importance behind the words "I love you” and could even assume a sense of indifference from the subject. (At a marriage ceremony, in recognition of the bride, people walk down the aisle to their seats, and the bride and groom stand facing each other when pledging love.)

In the second instance, the subject is face to face with the person they speak to, demonstrating a physical connection by holding hands. One can assume that the subject intentionally reinforces what he is saying, indicating there is thought and meaning behind what he is saying.

Semiology is a way to communicate without dialogue. Kowzan (1986, p.57) explains that a semiotic analysis in theatre organises performance and that the theory of signs is essentially based on developing "logic, psychology and linguistics". The semiotics in theatre, however, are often rehearsed and not seen in their "pure state" (Kowzan, 1986, p.57.), with theatre using semiology to its benefit. There are many signs: a message, a badge, an icon, a symbol, a symptom, among others. These are positioned to evoke emotion, a thought or a feeling within the viewer. The differentiation in signs categorises the sign; the differences do not replace the sign's meaning. The theatre focuses on two types of signs: natural and artificial (Kowzan, 1986, p.57). The difference between the natural sign and the artificial sign is determined by the amount of emission rather than perception, the absence or the will to emit, release or communicate the sign (Kowzan, 1986, p.57). The difference between the two signs is how much the sign wants to be communicated. If the sign is portrayed very subtly, it is a natural sign. If the sign is portrayed forcefully, it is an artificial sign.

Another example that Kowzan (1986) offers to clarify the natural and artificial signs occurs when smokers burn themselves and yell, "Ow!". This is viewed as a natural sign. However, suppose a smoker yells a curse word. This is an artificial sign because "Ow!" is a natural linguistic response to being injured or hurt. However, when a person curses, it is based on individual linguistic habits or behaviours and possibly for a nearby person to hear (Kowzan, 1986, p.60). With the determination and understanding of natural versus artificial signs, it is clear that the theatre uses artificial signs. In theatre, these signs are rehearsed, reviewed, and critiqued to perfection. They, therefore, cannot be categorised as natural signs because the will to want to communicate the sign has been determined.

However, from Kowzan's (1986) stance, he explains that because theatre is so deeply embedded in everyday life and that everyday life is what feeds theatre, it is impossible to eliminate the natural sign from theatre (Kowzan, 1986, p.60). It is an involuntary sign when a performer breaks character and laughs when they should not. Alternatively, improvisation on stage, such as a prop breaking during the performance, allows the performer to determine how to go on with the show quickly.

Kowzan (1986) provides ten categories of semiotic analysis that can be applied to theatre. *The word* is a linguistic sign. *The tone* is how the word is said and communicated and

provides additional semiology (Kowzan, 1986, p.62). *Facial mime* unpacks the performer's expression (Kowzan, 1986, p.62). The performer's expression belongs to or depends on both space and time and is, therefore, seen as a kinetic sign (Kowzan, 1986, p.63). Kowzan (1986) calls this facial mime because it is a kinetic sign that closely works with verbal expression. He explains that verbal expression, such as shouting so hard one's neck becomes vascular and muscular, is vital and telling and that "it can often replace the word" (Kowzan, 1986, p.64). Seeing the muscular neck is how the audience determines the intensity in that particular space and time. *Gesture* separates gesture from the kinetic sign and views gesture as a behaviour of independent body parts (the hand, the leg, and the fingers, among others), and the movement of these body parts establishes the sign of communication. For example, holding two fingers together at the mouth to communicate smoking. In contrast, some gestures are accountable for creating an environment which is not linguistic (Kowzan, 1986, p.64). Putting a hand in front of one to indicate that a person should walk before one would be a gesture of politeness. The act of frowning would indicate a gesture of feeling, the feeling of sadness. *Gesture* is the actor's movement on stage. *Makeup* often indicates character study and conveys information about a character regarding age, race, and culture, among other details. (Kowzan, 1986, p.66). *Hairstyle* frequently imparts information like geography, generation, and social status, among others (Kowzan, 1986, p.67). *Costume* is how one portrays the external self by demonstrating sex, age and even profession (Kowzan, 1986, p.67). The costume and hairstyle will be a factor in gender performativity, which is discussed later in the literature review. *Accessories* fall between decor and costume and characterise themselves as an object or element of a costume that serves a purposeful role (Kowzan, 1986, p.68). *Decor* indicates a space, a place or a time in which the performance is being conveyed (Kowzan, 1986, p.69). *Lighting* serves to suggest that the provided space is a theatrical one and demonstrates to pinpoint the performer about their surroundings (Kowzan, 1986, p.70). *Music* serves to establish and evoke a specific atmosphere.

For easy reference, I have compiled the categories into a tabulated format:

No.	Title	Comments
1	The word	Listening to the word, I will determine the performer's vocabulary and the type of language used, for example, everyday, formal, conversational.
2	Tone	Listening to tone, I will explore the rhythm and cadence of the performer and will discuss the subsequent signifier there. For example, if a performer speaks in a steady cadence, it can establish a calm and collected persona. Suppose a performer is dynamic and does not maintain a particular cadence. This creates a dynamic atmosphere and even anticipation amongst the audience, as they are not always sure what will come next.
3	Facial mime	Looking at facial mime, I will analyse facial expressions throughout the performance and list the facial mimes in terms of their signs and signifiers.
4	Gesture	Looking at gesture, I will analyse the performer's bodily gestures on stage and determine the performer's physicality level. For example, some performers are very notable in how they utilise direct gestures, which proffers a high level of physicality and speaks to the dynamics of the performance. In contrast, some performers are very contained in their gestures. This section will list each gesture and analyse the sign and signifier of each gesture.
5	Movement on stage	Looking at movement on stage is pertinent to the performer-audience relationship, as well as the physicality of the performer. I will analyse how the performer walks and covers the stage and will determine the sign and signifier thereof. For example, suppose a performer walks from left to right of the stage continuously throughout their performance. In that case, it suggests inclusivity and unity as the performer tries to see and acknowledge as many faces in the audience as possible.
6	Makeup	Looking at makeup, I will analyse it the sign and signifier to determine what the makeup denotes. Keep in mind that naturally, not all performers wear makeup, which will also indicate something about the performer.
7	Hairstyle	Looking at hairstyle, I will also analyse the sign and signifier and what the specific hairstyle denotes to the audience about the performer.
8	Costume	Looking at costume, I will use this large contributor to the development and communication of identity. I will analyse the details regarding the sign (colour, style, and fabrics, among others) and what it signifies to the audience.
9	Accessory	Looking at accessories, I will see what else is on the stage with the performer and what this signifies. Within stand-up comedy expressly, I would assume to provide the example that I believe will be prevalent in most stand-up performances: the bar tool and the water bottle.
10	Decor	Looking at décor, I will establish the characteristics of the performer's stage and venue.
11	Lighting	Looking at lighting, I will establish the mood of the performer's venue.

12	Music	Listening to music, I will analyse how it affects a specific mood amongst the audience.
13	Sound effects	Looking at sound effects, I will analyse the sound effects in terms of sign and signifier.

The word and tone speak to the performer-audience relationship; the tone establishes the current stance of the performer-audience relationship, and the word maintains or develops the performer-audience relationship.

The facial mime, gestures, makeup, costume, and hairstyle represent gender performativity. These categories (facial mime, gestures, makeup, and costume) will be analysed to determine if and how the case studies perform gender.

2.4.2 Gender performativity

Gender performativity is significant in this study because, like a curated character is performed, so is one's gender. In 'Advances in Social Science, education and Humanities Research*',* Li He (2017) deconstructs the development of Judith Butler's gender performativity. Li (2017) divides the article into sections. In the first section, based on theoretical research, she discusses two topics: how Butler developed conventional thought and the concept of subjectivity.

Li (2017, p.682) explains that Butler's research contributes to cultural theory as society perpetuates gender, and gender is the practice or a principle that the identity learns to acquire. This implies that because gender is moulded, it fluctuates and is arguably inconsistent because the mind determines or frames it. Because society perpetuates gender, Butler explains that formulating a gender becomes cultural coercion, and one adopts a gender based upon their current circumstance (Li, 2017, p.682). Culturally, the only way that gender obtains meaning is through the body. In other words, the body is an agent for gender to be apparent; gender effectively cannot be communicated, performed, or acknowledged without the presence of a body to impart the gender. He cites Butler, "The body becomes the location of the construction of gender" (Li, 2017, p.682). The mind establishes gender, and Butler discusses that because gender is not a natural practice, it is a "regulated process of repetition" (Li, 2017, p.683).

The notion that gender is not a fixed term like sex is attractive because gender can then plausibly be considered subjective. Butler (2017, p.683) clarifies that subjectivity means that the subject is what holds power. The subject, therefore, must have the power to obtain its formation but is also exposed to exploitation on account of its power. I understand this implies that the power of the subject is what permits its subjectivity, but that power gives way to exploitation, such as assumptions or conclusions.

In this way, the subject is created by performing gender. Butler explores further and explains that because a body or a person is "not fixed" and is constantly evolving and changing, the body that is performing the gender is always "in process" (Li, 2017, p.683). Gender, therefore, is also ever-changing and can also be seen as "not fixed". If something is "in process", one can assume it is incomplete or unsolved. The same applies to gender. The repetitive social actions that one believes display gender are different from person to person, which reinforces that gender is "not fixed".

In the second section, construction of social gender, Li (2017) expands on the differences between Butler's gender construction and the traditional feminist gender construction, the performative act and gender, Butler's gender performativity, and. the construction of Butler's gender identity.

The idea of performance implies a focal point on a subject (that is, in the performance) and that the performance is more crucial than the subject (Li, 2017, p.683). The subject is built into the performance for meaning or purpose. In this instance, I address three elements: the subject, the performance, and the purpose. If we assume the subject is the person and the performance is the gender, within the performance equation (above), this will mean that the gender is more important than the person and how the gender is being performed is what gives the subject meaning or purpose. This is a clear demonstration of the principle of gender performativity.

Gender performativity is purely based on gender and the body and how the gendered body is performed (of gender performativity) (Li, 2017, p.684). The gendered body is a performance in which the subject uses every day, repetitive acts to formulate a reality (Li, 2017, p.684).

Li (2017, p.684) explains how Butler asserts that gender is elusive because the actuality of gender is irregular. After all, gender is adopted based on a person's environmental and social influences, which often change, and the vital part is the perpetuated power of gender performativity. Butler further explains that although gender performativity is primarily seen as a performance, gender performativity should be seen as the "doer behind the deed" rather than "the limited notion of resignification" (Li, 2017, p.684). Therefore, gender performativity focuses on the person behind the performance rather than the practised and perfected performance.

Butler suggests that gender is performative because the emergence of gender is communicated through performance or gestures and not the body. Immediate social and cultural surroundings frame gender, and the stance of these social and cultural surroundings will never stay constant; social trends move in and out of fashion, and culture evolves (Li, 2017, p.684). This is a safe interpretation as, again, gender is ever-changing and will never be a steadfast practice. Butler says that gender is a "symbolic narrative effect" and is a grouping of symbols, physical or mental, that is forced on the body (Li, 2017, p.684). How the body conducts itself is how gender is created and communicated (Li, 2017, p.684). Gender is created or communicated through the repetition of actions. Butler insists that gender should, therefore, never be considered a noun due to its constant repetition of actions, which defies the definition of a noun. A body's physical behaviour reveals its identity, like the physical action of applying makeup, which encourages a female or feminine identity. A person who maintains short hair is traditionally considered male or masculine.

A person arguably feels pressured to fill a female or a male space to avoid feeling lost, uncomfortable, or neglected in society. Gender has historically formed a large part of the identity of the self and has made decisions for us; if you are a heterosexual married woman, it is frowned upon to be socialising with men. These rules have successfully travelled from generation to generation, so when a person does not fall into either category, woman or man, there is a significant risk of being rejected by society because society is unsure where to place you. There is also a considerable risk of feeling that you do not know where you belong. Gender ideals create a great set of social rules arguably followed by most of society. In other words, there is an insurmountable pressure to fill a gender category.

In *Performative Acts and Gender Constitution: An Essay in Phenomenology and Feminist Theory,* Judith Butler (1988 p.519) reinforces the idea that gender is not a "stable identity" but is simply a way in which a person performs ritual acts, and gender is a social construct performed by styling the body. It should be viewed as how 'gestures, movements, and enactments' perpetuate an idea of an "abiding gendered self" (Butler, 1988, p.519). This advances Goffman's (1990) theory that individuals construct personas for everyday life and generate characters that perform their day-to-day activities when he states that a person selectively decides what characteristics and bodily areas of themselves they are delivering to the audience or the viewer, which suggests performing everyday acts ritualistically. For example, audiences know that the comic performs during the stand-up comedians' performances and that the performance was prepared for, scripted, and directed. Nonetheless, because of the personal nature of most stand-up routines, there is a sense that the performer and the audience are friends in conversation. Helga Kotthoff (2005, p.8) researched gender as a humour category and addressed dominant characteristics of marginalised humour, such as humour indexing gender and gendered dimensions (such as status, aggressivity, social alignment, body politics/sexuality). Kothoff (2005) suggests that outsiders (the timid or the lower in status) are reluctant to generate humour in public because the response may not be suitable or favourable.

In Chelsea Handler's stand-up comedy performance *Revolution* (2022), she sports a perfect, slicked-back hairstyle with a ponytail, well-applied makeup accentuating defiant cheekbones, lip gloss, and a well-fitted denim jumpsuit with white sneakers. Can one then assume that Handler wears this when conversing with her friends?

In comedian Ricky Gervais's comedy routine *Supernature* (2022), he wears a simple black t-shirt, comfortably fitted blue jeans, and black sneakers and displays some facial hair. Can one assume this is what Gervais would wear when conversing with friends? One could assume that due to Gervais' apparent comfort in his dress and his agility and mobility, he reinforces the idea of talking with friends rather than performing for an audience. However, is Gervais not only performing gender by portraying masculine ritual acts, for example, dressing casually? Why does this then promote the assumption that he is the more transparent and authentic performer? Just as Handler performs gender through her feminine rituals by

wearing tightly fitted clothing and makeup? It is safe to assume that, once again, it does culminate in the outcome of stereotypes, as stereotypes are often used to aid a viewer in understanding the performer, albeit an uninformed understanding. Butler has proffered the theory of gender performativity but uses this theory to enforce that gender is not finite and that there are several ways in which gender can be performed and communicated. Rather than shying away from the topic of gender, Butler provides educational lenses through which to view gender rather than a traditional lens.

Butler's (1988, p.520) definitions of the three ways gender performativity is demonstrated are useful as she details these practices to establish a "naturalised conception" of gender and how gender can be conveyed in various ways.

Sex/gender: Feminist and phenomenological views

Butler (1988) explains that feminist theory is based mainly on the principle that women's existence depends intensely on the body or the physiological. To decipher sex from gender, feminist theories have argued against sex imposing social meanings for the female experience (Butler, 1988, p.520). Butler (1988, p.520) cites French philosopher Maurice Merleau-Ponty (1962), in which the body is discussed as a historical idea, not a natural being. The factuality of the body is not being refuted but reimagined from the procedure in which the body claims cultural meaning. Therefore, the body actively personifies cultural and historical possibilities (Butler, 1988, p.520-521). Butler (1988, p.521) suggests how gender is embodied can be compared to performative acts within theatre, and she assigns herself the task of determining how gender is communicated through bodily and fleshly acts and how these acts transform gender.

Butler (1988) compares performing gender to performing in a theatre; the performers practise their lines, gestures, and movements and do fittings with a costume designer who will decide how to present themselves to their audience. Butler suggests that this procedure also produces gender. Subsequently, it embodies aspects such as social and cultural norms. Butler (1988, p.521) explains that "doing gender" is not only a practice that can be observed from the surface or the person's appearance but also manifests by being influenced by social expectations. I note the importance of the semiotic analysis used with the gender

performativity theory in this study, as semiotic analysis and gender performativity contribute to the manifestation of gender.

Butler (1988) explains that using the word "performativity" does provide connotations of double meaning and justifies this by explaining that even though historical concepts and ideas have shaped what it is to be a woman, she explains that being a woman means you have *become* a woman. Butler (1988, p.522) views this as a way of being obedient to societal and cultural norms regarding gender but also acknowledges that some ascribe to gender for survival because not ascribing to gender means being misunderstood and othered.

Binary genders and the heterosexual contract

To ensure the reproduction of the current society or culture, one would need to promote the gender roles of the given society. Butler recalls that regarding reproductive ideals, the connotation of natural sex with a provided opposite gender/sex is not a natural attribute (Butler, 1988, p.524). Butler (1988, p.525) questions whether phenomenology can redefine and rebuild the cemented ideals of sex and gender, particularly regarding the body. Butler (1988) questions whether theory and practices can evolve to prioritise the primary vessel that communicates gender: the body. Butler (1988, p.524) explains that the body is a precise system of how gender is dramatised and enacted. Without the body of the human being, many social constructs and limitations would fall away. However, one must consider the 'act', a shared experience, perhaps between performer and audience. Therefore, without the human body being in existence, yes, the social limitations would fall away.

Nevertheless, the only reason that social constructs and constraints exist is the 'act', which requires more than one person for the act to come to fruition. Butler (1988, p.525) explains that gender is not a "fully individual matter" because a person will individually perform gender by their regulations and prohibitions. Like the performer-audience relationship, a theatrical performer cannot perform without its audience. In this breath, Butler (1988) explains that because gender is an act, gender is not observed when one is alone and without an audience. By definition, gender would then be considered a performance (rather than an inherent personality protocol).

Gender is a scripted performance that begins before the scene takes action but needs an individual actor to act as a vessel and bring the performance (or gender) to life. The practice that defines an act is an action that is repeated, which could arguably be linked to the performance of an actor whose sole purpose is to reinstate and portray the gender that was assigned within the respective character (Butler, 1988, p.526). The reality of gender is quite simply performative. In other words, gender is only as good as how it is performed (Butler, 1988, p.527).

Feminist theory: Beyond an expressive model of gender

Butler (1988, p.528) prefaces this subsection by stating that she is not aiming to redefine society from a woman's perspective and that the worldly perspective is not hers to posit. Instead, she notes how personal perspectives are influenced by gender. She explains that she does not wish to deconstruct or reconstruct gender rhetoric from a personal perspective but would like to acknowledge the complex and compromising lineage embedded in the livelihood of women (Butler, 1988, p.530). Regarding my study, I understand the compromising lineage that Butler refers to is the generalisation and expectation imposed on women. Butler (1988) states that the lineage of gender influences personal perspectives, suggesting that the many implied expectations imposed on a woman would influence her viewpoint, perhaps making her viewpoint resentful.

Butler (1988, p.530) writes that the lineage of gender does depend on historical assertions and assumptions, which have contributed to the 'act' of gender in how gender is displayed and communicated in a social setting and how gender has been historically established. In this subsection, Butler (1988) analyses how gender is being created and construed and how gender is being received and consumed. She describes and supports the fact that the way gender is being socially construed today depends on historical establishments of gender. How gender is being socially received depends on the historical lineage of the gender in question.

The three subsections above discuss how gender is performed and consumed by an audience or society: the first discusses how the body is a tool that can personify gender through acts and gestures, the second argues that gender can only be performed in company; one person performs a gender while another sees the performance, and the gender cannot be performed

or acknowledged when one is alone: and the third asserts that a person's perspective is influenced by the traditional concepts and lineage of their gender.

I recall Goffman's (1990) theory that the performer assumes a character and his belief that the subject and its power address gender performativity. The performance establishes the subject, implying that the subject is secondary to the performance. In gender performativity, one might assume the performer to be the subject while the performance details gender. This means that throughout the comic routine, the performance (the gender) can become more notable than the subject (the performer). This statement may seem problematic but bearing in mind that the performer is assuming a character, and like one would dissect a well-developed, scripted character, so too can one examine the character of a stand-up comedian or comedian. I would, therefore, like to clearly distinguish that the character being portrayed is being analysed rather than the performers themselves.

Further, what happens when a short-haired person applies makeup? What does the mind assume, and is this person taking part in gender performativity? Is Gervais not only performing gender by portraying masculine ritual acts, for example, dressing casually? Why does this then promote the assumption that he is the more transparent and authentic performer? Is it the same as when Handler performs gender through her feminine rituals of wearing tightly fitted clothing and makeup?

2.5 The Fashioned Body

In *The Fashioned Body* Scholar, Joanne Entwistle (2015) focuses on fashion, dress, gender, and sexuality. She explains that even uni-sex clothing nods towards gender – further elaborating and asserting that clothing is predominantly used to determine the sex of the wearer (2015). For example, a baby wearing pink will indicate to a stranger that the baby is a girl, as gender is often not yet recognisable in a baby. She explains that the practice of dress is to emphasise the sexed body. Women's clothing accentuates breasts, which ordinarily might be obscure, and adds that clothing exhibits and emphasises the body. A tailored man's jacket often accentuates broader shoulders and promotes masculinity, and a corset enhances a tiny waist and denotes femininity. These two examples show how clothing displays the body

and emphasises it. Entwistle (2015) notes that clothing can evoke gender in the “absence of the body”; for example, a tie is often associated with men.

In conclusion, clothing is the only signifier of difference. The clothing initiates the gender and the characteristics of that gender. Think of the sign outside a bathroom for women; these signs usually include skirts or triangles to indicate a dress. This image or symbol referring to the clothing item is simply pointing to a clothing item. However, the invariable knee-jerk response is to associate skirts with women, which suggests the bathroom is dedicated to women. This is the absence of the body, but even the lack of a body does not deter the viewer from seeing and comprehending gender. Entwistle (2015) deduces that because the absence of a body still defines gender, clothing has deviated from a biological realm and is situated in a cultural realm. Clothing is the most accurate and concentrated way of identifying gender. Clothing is an irrefutable and significant tool in producing gender and successively femininity and masculinity as “clothing turns nature into culture” and adorns the body with cultural significations (Entwistle, 2015, p.144).

Entwistle (2015) discusses sexuality and how one effectively declares gender by dressing according to cultural stipulations of femininity and masculinity. Entwistle (2015) refers to a cross-dressing person to contextualise her opinion further, stating that when a man dresses as a woman and does it successfully, where audiences are under the impression that this is a woman, it not only accentuates how vital clothing is in defining gender but also how sex intrinsically does not perpetuate gender. Entwistle (2015, p.145) suggests that sex and gender are not linked strongly by anything other than cultural influences and conditioning. The very distinct connection between body, sexuality and gender is so strong and defiant that these connections, links, and connotations infiltrate the workplace and assist in perpetuating how people do not consider women to be business-like.

CHAPTER 3: The current climate of womedy – women's stand-up comedy

3.1 Aims and Objectives

This chapter aims to contextualise the outcomes of the Methodology chapter by discussing what stand-up comedy is and how stand-up comedy addresses stereotypes. Once stereotypes within stand-up comedy have been discussed, the chapter will explore how female stand-up comedy challenges stereotypes through personal narrative and how intersectionality plays a role in female stand-up comedy..

3.2 What is stand-up comedy?

In the interest of clarity and easier reading, I refer to *stand-up comedy* and *comedy* synonymously only when discussing the comedic content of comedy in this chapter.

To grasp the practice of women's humour or stand-up comedy, one must return to comedy and stand-up comedy at its foundation. There are many different facets from which to view comedy. Nonetheless, the simplest is from associate professor at Maryland University Lawrence E. Mintz, who studied American Studies. She explains that stand-up comedy is an experience or an encounter in which one performer performs to an audience by conducting themselves in a comical way or through a humorous context and is very scarcely supported by aspects like costume, props and stage setting (Mintz, 1985, p.71). Mintz (1958, p.71) further supports this definition by positing that the comical context being performed cannot be taken as lightly as the heartfelt comedic nature of comedy and its audience response because the comical context is deeply sewn with rituals and integral personal experiences. Delia Chiaro, Italian Professor and President of International Humour Studies, explains that a joke will always target someone and encourage the recipient to laugh at the joke (2018, p. 70).

This definition of stand-up comedy introduces the two essential facets of comedy. However, comedy serves as a light-hearted entertainment medium. It is also a carefully curated vessel for change. This curated vessel can seamlessly (when executed well) address social issues,

social constructs, marginalism, gender inequalities, racism, and sexism, and the list becomes infinite.

To narrow the scope, one can think of stand-up comedy, along with comedy, as a practice that prioritises the directness between performer and audience (Mintz, 1985, p.72). Stand-up comedy is rooted in instant audience reaction and response versus the practice of "developing a plot and situation" (Mintz, 1985, p.72). In essence, a stand-up comedy routine would not be successful without an audience's instant reaction and response (for example, a laugh or a gasp). The function, or as some call the 'honour' of being a stand-up comedian, is to volunteer yourself to be the butt of the joke (Mintz, 1985, pp.75). For example, in Tiffany Hadish's Netflix special *My Body is Like an Expensive House* (2015), Haddish explains to the audience that acquaintances tell her that because she is such a pretty woman, she does not have to be in comedy. To which Haddish replies, "I have a lazy eye, and I can't read good". This makes Haddish the butt of the joke. However, Haddish also gives a new meaning to what a pretty woman can or chooses to do.

In the book *The Paradox of Comedy,* the late professor of philosophy and Dean of the University of Texas Paul Woodruff (1997, p.319) explains that comedy's nature and dynamics simultaneously create aversion and attraction. Comedy allows a despaired audience to see their rival as ridiculous, which helps a person to laugh at their despair and prevents the feeling of pity (Woodruff, 1997, p.319).

This detachment allows a person to see humour in their despair by seeing their circumstances as if they are not their own (Woodruff, 1997, p.319). This detachment also speaks to the idea that comedy is simultaneously irreverent and funny and should be seen as a form of entertainment. The detachment that Woodruff discusses should not be seen as a distanced or unengaged audience, but rather an audience that allows the comedy to do its job and encourage different perspectives that the audience can fully dive into (and even escape their reality). Mintz (1985, p.73) explains that jokes serve to dismantle, warp, disrupt and restructure social "expressions and perspectives" and that the laughter in support of these provocative jokes subconsciously allows a community to bond over potential social change.

Mintz (1985, p.74) discusses comedians' ' licence' and that comedians must veer from social behaviour and expression, often communicated by ridiculing themselves. As the comedian ridicules, the compassion from the audience allows the performer to be exonerated from social behaviours and expressions (Mintz, 1985, p.74). The long-adhered-to role of the stand-up comic is to assume the character of a "negative exemplar" to effectively serve as the "butt of the joke" (Mintz, 1985, p.75).

Mintz (1985, p.76) introduces the idea of a "comically protected situation", which refers to the customary 'only joking' that a comic often uses. 'Only joking' or 'just kidding' allows a protected space for the performer and audience; if the performer says an offensive joke, they can say 'just joking' to diffuse the offensiveness. Also, if the audience member laughs at the offensive joke, they feel better about laughing because the performer is 'only joking'. For example, this is a joke from Dave Chapelle's Netflix comedy special *The Bird Revolution* (2017):

> Sometimes, the funniest thing to say is mean. It's a challenging position, so I say many mean things. But you guys gotta remember, I'm not saying it to tell; I'm saying it because it is funny.

Woodruff (1997, p.319) explains that comedy is like theatre; both art forms serve to evoke emotion from the audience, but the accomplishment is in an audience member producing emotion for a staged persona or story, ensuring an audience member has grown invested in the staged persona/story rather than see it as ridiculous or unrelatable.

Academic Patricia Nedelea (2020, p.95) suggests that while comedy and theatre are identical, the stand-up comic is more rational and detached than any other performer because comedy breaks the fourth wall and relies on unpredicted responses from the audience. The stand-up comic must maintain control of the environment, regardless of the audience response, which requires strong rationality from the performer.

Nedelea (2020, p.103) further posits that the microphone is a sign of stand-up comedy, allowing the microphone to signify reason and rationality:

> The microphone symbolises detachment, by which the actor masters the audience.

Here, it is crucial to establish that the detachment formulated amongst the audience differs from what the performer needs to demonstrate to succeed at comedy. The audience's detachment allows them to enter different perspectives and escape reality but does not encourage detachment from the performer. The performer's detachment, which could better be referred to as rationality, must be established to maintain control over their environment. Nadalea (2020, p.103) explains that the microphone is a sign of hierarchy; the audience sits in front of the stage, and when they see the microphone, they become aware of their position as the audience. The audience members have paid to view the stand-up comedy performance, which is almost always guaranteed to offend someone in the audience due to the dynamic nature of comedy. Because the audience has paid to view this performance, it could be suggested that their offence cannot be justified if they were offended because the audience member chose and even paid to be at the performance (Nadalea 2020, p.103).

Brodie (2008, p.158) also suggests the authenticity that the microphone can generate, and even intimacy, as it allows the human voice to project at its natural register, which simulates a conversation that could be had one-on-one. The microphone also encourages new ways of expression for the performance because it "changes the nature of what one says, and how they say it" (Brodie, 2008, p.159).

Brodie (2008) and Nadalea (2020) agree regarding the microphone's power. Stand-up comedy relies on an audience and their interactions. Nonetheless, the microphone is a constant reminder to everyone in the venue who holds the ultimate control, and they can quickly gain control by simply speaking into the microphone (Brodie, 2008, p.159). The performer-audience relationship can signify successful comedy, but there is always the subconscious assertion that the most power lies in the performer (Brodie, 2008, p.160). The microphone establishes creative control and encourages the audience to work as a group, ultimately removing their unique agency (Brodie, 2008, p.160), contributing to the performer's power.

Based on the idea that stereotypes are the currency of comedy (Gilbert, 1997, p.323), it is essential to note that although stereotypes have progressed since 1997 (when this statement was made), stereotypes have not progressed and evolved enough for the globalised and generalised, historical stereotypes to not be of concern or significance today. For example,

the stereotype encourages the idea that mothers should be stay-at-home mothers. Yes, this stereotype is timely and historical. Today's Young women are aware of it (be it through television, books, or media), which speaks to how persistent and tenacious most stereotypes are and may always be.

Based on the immense importance stereotypes hold as a tool within the comedy world, stereotypes will likely occupy an indefinite spot of functionality in the comedy world. Arguably, the longevity of stereotypes will determine the direction of comedy; for example, if and when stereotypes start to shift, comedy will address this.

3.3 Addressing gender stereotypes … wrecking the wealth of gender stereotypes

A further distinction within comedy that should be explored is the idea or practice of women's stand-up comedy. According to Jo-Anne Gilbert (1997, p.317), women represent the marginalised group in the comedy space because the comedy space is dominated by men, which encourages female comedians to establish a character or construct to communicate this marginality. Chiaro explains that women are often the target of sexist jokes and this positions the woman as peripheral in the society that they serve an essential part in (2018, p.72). American lecturer in Gender and Women Studies Kathryn Kein (2015, p.672) also says that women persistently struggle with the idea that women are not as funny as men. Feminists are widely known to foster the characteristic that feminists cannot take a joke and appear grumpy (Kein, 2015, p.672). Kein's (2015, p.673) article researches a feminist perspective of humour in the scholarly world and posits many valid questions. Kein wonders what female humour would look like and how one would analyse humour that sought to engage women rather than male stand-up comedians performing for men. Kein (2015, p.673) considers the gaps in gender assumptions due to the gendered conjecture and gender inequality of comedy and how comedy can work to fill these gaps of gendered presuppositions.

Rebecca Krefting (cited in Klein, 2015, p.673) proffers the practice of *charged humour* and explains that charged humour explores social justice by addressing topics of racism, sexism, and heterosexism, among others. Krefting (cited in Klein, 2015, p.674) discusses how charged humour creates awareness and encourages oppressed groups to act. Due to the

controversy of addressing biased topics and groups, many streaming services feel this type of humour would compromise their support and therefore does not back charged humour, which Krefting (cited in Klein, 2015, p.674) believes perpetuates the gender inequalities in comedy as most women perform charged humour. This assertion holds weight only to a certain degree. Yes, charged humour is controversial, explicit, and often foul, and would understandably struggle to gain the exposure it needs due to its crude themes. However, male comedians also address grotesque topics, but their stand-up comedy performances are still accessible. Is this because male comedians do not perform charged humour, which encourages social change?

"Female comics perform their marginality by occupying principles of oppression and transgression" (Gilbert, 1997, p.318) and feeding into *self-deprecatory humour* and the debate of whether self-deprecation promotes or stunts the progress of women's comedy and satire. Many women frown upon self-deprecating humour and consider it distasteful to "feed the enemy". However, the research, I must insist, speaks for itself.

Stereotypes have been described as the "currency of comedy" (Gilbert, 1997, p.317). According to the *Oxford Dictionary* (2024), a stereotype is a global, oversimplified idea or image of a person, persona, or thing (I cannot help but mention the example provided was 'a woman as a carer').

Because stereotypes hold such globalisation and are understood by most of the population, it can set the stage for a joke without much room for error, allowing all the viewers to begin listening to the joke with the same foundational understanding. The predicament, however, is that most stereotypes favour men, leaving women in the position of oppression (and arguably having to laugh about it).

Helga Kothoff (2006) creates a framework for how a person can view gender and humour. Kothoff's (2006) framework can be used for this study. Firstly, Kothoff (2006) looks at *gender as a category in humour,* and *s*econdly, how humour indexes gender. Kothoff (2006) then looks at *humourous keying and comical contextualisation,* and lastly, she tackles gendered dimensions through *status, aggression, social alignment,* and *body politics/sexuality.*

Gilbert (2004) formulates a practical framework. Gilbert (2004, p.317) first looked at *performing identity* and then researched *performing culture as the politics of performing marginality*. Gilbert (2004) separates *performing culture* into three categories; *humour and objectification, self-deprecation and subversion,* and lastly, *victim and butts.*

In comparison, the two frameworks reflect a similar construct and address gender stereotypes subverting expectations through personal narratives and social empowerment.

Joanne R. Gilbert (1997)	Helga Kothoff (2005)
Performing identity	Gender as a category in humour
	How humour indexes gender
	Humourous keying and comical contextualisation. Keying, in this instance, refers to propelling or planting humour.
Performing culture, the politics of performing marginality: humour and objectification, self-deprecation and subversion, and victims and butts	Gendered dimensions: status, aggressivity, social alignment, bonding and biting, body politics and sexuality

Kothoff (2006) builds on and contributes to Gilbert's phenomenology. Gilbert (1997) looks at how identity is performed in marginalised performance. Gilbert (1997, p.318) discusses self-deprecation and how self-deprecatory humour is often frowned upon by critics (specifically feminist critics) because self-deprecatory humour appears to be encouraging the oppressive stereotypes of marginalised people rather than questioning or refuting. Barecca (cited by Gilbert, 1997, p.318) suggests there is a contradiction in feminism because feminism is rooted in empowerment, so for power to be received by any means necessary is admirable. However, obtaining power through self-deprecation is distasteful. Gilbert (1997 p.323), therefore, posits that one should neglect the oversimplified rhetoric that the implied aggression of comedy accommodates male comedians and should instead prioritise the subject-object relationship in all types of humour if one would like comedy to evolve. Gilbert (1997) suggests that if the narrative of comedy being aggressive and a male-dominated world

is the most important aspect of comedy, the conversation of comedy will stagnate and halt. If one were to turn their importance to the subject-object relationship (performer-audience relationship) and see this relationship as the basis of comedy, it would allow the conversation around comedy to be infinite.

Kothoff (2006) builds further on performing marginality. Kothoff (2006, p.4) discusses gender as a category in humour and explains that the misleading idea of not being able to display femininity and aggression (or aggressive jokes) simultaneously is being successfully appealed to and suggests that the joke determines the relevance of gender. The individual joke and context should determine the importance of gender rather than the act of comedy or humour. Kothoff (2006, p.5) explains, mainly in a historical context, that while women were often the object of many jokes, they were not allowed to be the subject or performer, at least not on a public platform. This creates an intriguing ambiguity. As women, being the object of the joke, would it not be valuable to hear from the 'objects' themselves? Women were being laughed at (in the comic space) but were not allowed to perform these jokes about themselves. This suggests that the audience is, arguably, committed to hearing and laughing about women, but not in an authentic way. If the joke is about a woman, written by a woman and performed by a woman, naturally, it could run the risk of being too unrelatable to the well-communicated stereotypes and would jeopardise laughter. Kothoff (2006, p.5) says (again in a historical context) that what was controversial for men was even more controversial for women, and it was not seen as "ladylike" for a woman to "fool around" because fooling around or being comical means moving/warping the body and making facial expression. The primary aim of comedy is to defy norms, and defying norms means generating new viewpoints of objects, which initiates creative power and, subsequently, "freedom to intervene", which was not generally associated with the female persona (Kothoff, 2006, p.5).

Kothoff (2006) analyses how humour indexes gender by keying comical contexts and discussing four categories that personify these traits. Kothoff (2006, p.6) explains that gender can be communicated subtly and deliberately, and either way, gender contributes to the interactions that happen in comedy. This statement also speaks broadly about performing

gender in comedy and contextualises the discussion and analysis of the case studies in the previous chapter of Methodology.

Regarding gender keying, Kothoff (2006, p.6) refers to conversational humour and how this type of humour uses "personal interference" to establish the joke. Kothoff (2006, p.7) previously determined keying in 1999 and explains that keying is the process that regulates the reality being created in the comedy or comedic content. For example, discussing current events will only be relatable to those also experiencing the event. This speaks to the detachment created amongst the audience and allows the audience to enter a new perspective by being able to veer their current reality into a new and humourous direction.

Historically, women were not encouraged to perform comedy on a public platform, which led to comedy being performed in intimate spaces, like at home, which is a more authentic representation of comedic activities (Kothoff, 2006, p.7).

The four categories that Kothoff (2006) utilises to personify indexing humour and keying gender are status, aggressivity, social alignment, bonding and biting, body politics and sexuality. While Gilbert (1997) looks at similar categories but titles them: humour and objectification, self-deprecation and subversion, and victims and butts.

Kothoff (2006, p.8) examines status and how status and gender are often inevitably intertwined. Kothoff (2006) then discusses aggressivity and how avoiding aggression, verbally and physically, is what initiates femininity and relates it to generalised school days when boys were known to fool around and frolic. At the same time, the girls mostly laughed (Kothoff, 2006, p.13). Kothoff (2006, p.13) discusses how aggression in every sense, mocking, parading, and ridiculing, is relevant to one's gender because aggression serves to question, expose and even create friction. However, if the aggression is delivered comically, it is more difficult for a person to respond to it (Kothoff, 2006, p.14). For example, does a person laugh it off, do they take offence, or do they respond with comical aggression?

As Kothoff (2006, p.15) discusses social alignment, she prefaces the discussion by saying that conversational humour holds femininity and that women often joke about difficult experiences, hard-to-work-with people, and their constraints. This is one of how gender contributes to social alignment. Kothoff (2006) discusses this example in a historical context.

Although this is still relevant, perhaps a more suitable contemporary example is women referring to stereotypes and negating them to determine social alignment.

Kothoff (2006, p.16) explores the *bonding and biting* element in humour to illustrate the paradox of comedy and how comedy can pull in the audience but also offend or shock them. Lastly, Kothoff (2006) looks at body politics and sexuality in humour as a way of indexing and keying gender in humour. Kothoff (2006) explains that sexual references are addressed more often than not in comedy. She explains that when a lustful man sees an attractive woman, he grows frustrated at not getting closer to her and subsequently makes a crude joke with a listener to vent his frustration. Joke-telling, coupled with laughter, channels and addresses the urge, and the woman is now left verbally vulnerable rather than physically vulnerable (Kothoff, 2006, p.16). This is how gender can be amplified regarding body politics and sexuality in humour.

Although Gilbert's (1997) research is significantly older than Kothoff's, Gilbert's (1997) research is still relevant, Gilbert (1997) uses *humour and objectification* as politics in performing marginality.

Gilbert (1997) then analyses body politics and sexuality and how this indexes gender in humour. Comedians work with generalisations and stereotypes (Gilbert, 1997, p.323). Gilbert (1997, p.323) explains that the link between objectification and stereotypes has been researched in abundance, therefore determining an undeniable link. Being marginalised means being othered and thus ultimately allows outsiders to define who you are (Gilbert, 1997, p.323). Feminist theories have suggested that if one were to defy this type of authority, one would either claim or reclaim subjectivity and question oppression (Gilbert, 1997, p.323). Gilbert (1997) asserts that comic performances by women reflect characteristics similar to those of African-American or gay-Jewish performers. (Gilbert, 1997, p.323). The discussion of subjectivity is at the core of marginality. For example, feminist humour is often at the forefront of marginal humour because it justifies a woman's experience and subsequently provides subjectivity to the audience. Nonetheless, Gilbert (1997, p.323) does note that subjectivity can only be deemed successful when it is up against an opposing subjectivity, arguably a man.

Furthermore, Gilbert (1997, p.325). looks at *self-deprecation and subversion* and defends the idea that self-deprecation is a classic characteristic of marginal humour. Gilbert (1997, p.326) explains that self-deprecatory humour is inflammatory. However, self-deprecation is a remedy for the oppression of marginalised people (Gilbert, 1997, p.326). Within the marginalised group, one uses self-deprecation and the aggression associated with self-deprecation to deliver social critique (Gilbert, 1997, p.325). Gilbert (1997, p.325) explains that self-deprecation is how the powerless personify their power. The exciting factor of self-deprecation is that it does not serve to hurt the audience and should be considered physically and verbally safe. However, it is still seen as a perpetuation of stereotypes and gender oppression.

Gilbert (1997, p.327) also discusses *victims and butts,* which addresses how marginal humour allows the audience to determine the butt of the joke. Gilbert (1997, p.327) also asserts that because the comic is "wise enough to play the fool", the performer is in charge but still allows an area of interpretation and subsequently provides agency to the audience.

Now that the characteristics of marginalised humour have been established, I would like to introduce the term 'womedy' based on my honours research. I created the term to provide a term for how women (female stand-up comedians) address stereotypes. At this stage, it is essential to note that although womedy stems from the word 'women', women should merely be seen as the starting point that urged womedy, and womedy, therefore, is not and cannot only be performed by women.

Firstly, female stand-up comedians address stereotypes (whether the stereotypes are favourable or not). Secondly, the female stand-up comedian gives the stereotype context, often by discussing a personal experience to lampoon the stereotype; this is explored further in Section 4.4, which examines the subversion of expectations by exploring Personal narratives. Thirdly, the female stand-up comedian then takes the stereotype to a level of absurdity. Upon watching many hours of women's stand-up comedy, it appears that the level of absurdity is often directly related to the absurdity of the stereotype (the more absurd the stereotype, the higher the level of absurdity) and the absurdity is what flips the stereotype on its head.

When I say, ‘on its head’, I am referring to the deconstruction of the stereotype. The second stage of womedy (giving the stereotype context) is where the female comedian has now changed the direction of the stereotype. In essence, the focus of the stereotype has now changed. By the third stage of womedy (level of absurdity), the female stand-up comedian has now flipped the direction or the focus of the stereotype once again, so the stereotype has now been flipped on its head; the stereotype now leaves room for questioning and room for error, and the stereotype is no longer firmly rooted.

3.4 Womedy: Subverting expectations through personal narrative and the audience-performer relationship

Below is a contextualised example to better digest the framework of womedy and how it is performed by referencing Chelsea Handler's Netflix comedy special *Revolution* (2022).

	Explanation of each stage	**Example:** Chelsea Handler *Revolution (2022)* Netflix comedy special
STAGE 1 **Acknowledgement**	The comedian confronts the stereotype so as not to shy away from or ignore it.	Handler addresses the stereotype by discussing how women should be mothers and should want to go through the process of giving birth.
STAGE 2 **Subversion through personal narrative**	Subversion through personal narrative. The comedian provides context to the stereotype and subverts it by discussing personal experiences.	Handler says she has never been happier about her life decisions now that she is childless and alone. Here, Handler jokes: “Have you ever had to set your alarm clock for 10 am Monday to smoke weed with your gardener?”
STAGE 3 **Social empowerment and performer-audience relationship**	Social empowerment and performer-audience relationship. The comedian now flips the joke on its head.	Now, Handler says she did not have children on the “off chance I would have to survive a pandemic” and had to home-school “it”. Handler takes it a step further and says the only “reprieve” a parent has is to send their children to school (and have their teachers and educators take care of them), but now the pandemic has disallowed people from leaving their homes.

In conclusion, (1) the stereotype has been addressed, (2) the comedian has used personal narrative to contextualise and subvert the stereotype, and (3) flips the stereotype so that by the end of the joke, the viewer essentially lacks a steady ground on what stereotype was being addressed. Handler begins with the stereotype that all women should be mothers and concludes the stereotype by explaining how children are not allowed to enter school during the pandemic. This leaves the audience focused on the outcome of the joke rather than the foundation of it. In this way, the stereotype is successfully flipped on its head. Eco (1977, p.336) summarises why flipping a stereotype is effective:

> Marginal groups often embraced the stereotype of themselves in a manner designed not to assimilate it but to smother it. To tell jokes containing the stereotype was not invariably to accept it but frequently laugh at it, strip it naked, and expose it to scrutiny.

The subversion of expectation speaks directly to Stage 2 (with personal narrative) within the practice of womedy. As the comedian addresses the stereotype to display a clear awareness of the stereotype, the comedian then contextualises and subverts the stereotype by discussing personal narratives. The following section will discuss the process of personal narratives. At this stage, one must acknowledge that the comedian addresses the stereotype they intend to subvert, arguably dependent on their own prevalent and personal experiences.

The type or category of stereotypes being addressed by comedians are diverse. Their selection in this matter also indicates their comedy and what is vital to lampoon. Here, it is imperative to note that the stereotype being addressed can simultaneously speak to and urge the topic the comedian wants to discuss. Therefore, I discuss the stereotypes and the topic in the below examples.

In terms of stereotypes and topics, comedian Wanda Sykes, a Black, female, lesbian comedian, in her Netflix comedy special *I'm an Entertainer* (2023) chooses to discuss stereotypes and topics about how Black people historically entered a household through the back door (in discretion), that Jesus is not White (because Sykes is Black), and also how the "women call the shots" (with this reference, Sykes is referring to how her wife "calls the shots" even though they are both women).

With these observations, one can safely deduce that the performer addresses stereotypes and topics relative or essential to them. This is necessary knowledge as it gives an audience a broader perspective of the performer. As Joanne E. Rapf (1993 p.196) also explains, the comedian creates a parody of what is socially expected from them, from 'womanhood' to 'sexual fantasy and motherhood', which is a critique of these social expectations. It is not an affirmation of them. Therefore, Rapf (1993, p.197) posits that comedians offer or select the stereotype they wish to dismantle.

3.5 Intersectionality

Stephanie Shields (2008, p.301) researches intersectionality and states that it is one of the most crucial research contributions based on gender. Intersectionality discusses how a person's identity influences one's perspective about gender (Shields, 2008, p.301), which relates mainly to how Butler applies gender performativity.

Intersectionality is a recently developed theory, and due to the limited literature on comedy, the research combination of comedy and intersectionality presented very little relevant research. However, performing marginality and gender contributed little relevant academic research on intersectionality and comedy.

The intersectionality perspective asserts that a person self-defines their innate self in many ways simultaneously (Shields, 2008, p.302). For example, applied to a comedian, the comedian identifies as female in the gender category. They would identify as a woman elsewhere. The comedian can be both a female comedian and a woman. Shields (2008, p.302) provides another example: a White lesbian's sexuality is detrimental to her social position, and she would be othered. However, in comparison to other lesbians, a White lesbian still has racial privilege. In this example, the lesbian can be othered and have racial privilege.

To conclude intersectionality, I would like to refer to a joke by Dave Chapelle in his Netflix comedy special *Sticks and Stones* (2019), in which he discusses the LGBTQIA+ community. I do acknowledge that this joke is about sexual orientation only and does not discuss race, culture, and background as a factor. However, I feel the joke is successful and have transcribed the joke below:

The rule is that no matter what you do in your artistic expression, you are never, ever allowed to upset the alphabet people. You know what I mean—those people who took 20% of the alphabet for themselves. I'd say the letters, but I don't want to conjure their anger. Ah, it's too late now. I'm talking about the Ls, the Bs, the Gs and the Ts.

People would be surprised, and I have friends of all kinds of letters. Everybody loves me, and I love everybody. I got friends who are Ls. I got friends who are Bs. And I got friends who are Gs. But the Ts hate my fuckin' guts. And I don't blame 'em. It's not their fault. Its mine. I can't stop telling jokes about them. I don't want to write these jokes, but I can't stop!

You know, you hear all those letters together all the time. "LBGT, LGBT", and you think it's just one big movement. It's not. All those letters are their movement. They travel in the same car together. And… my guess is…

The Gs are driving the car. That makes sense to me. 'Cause there's white men in the Gs. And these people are trying to get around, uh, discrimination and oppression, and you know how white dudes are. "We know these roads. In fact, we built these roads. The rest of you buckle up; we'll get you to where you want to go".

So the Gs are just driving the car. Of course, next to the Gs in the passenger seat… is the Ls. Everybody likes the Ls except the Gs. I don't know what that's about. I know the Gs don't like them that much. The Gs always say, like, little subliminal digs on 'em. Its unnecessary shit. It's not mean, but you know what I mean? They be like… "I wouldn't wear that".

And the only thing that breaks the tension between the Ls and Gs are the Bs in the backseat. That's right. There you go. Everybody screams out when you hear your letter. If there's one thing that the Ls and Gs agree on, it's that the Bs are fuckin' gross. They seem greedy to the Ls and the Gs. You know what I mean? Cause they're sittin' in the back seat like, "Yeah, man, I'll fuck anybody in this car. What's going on, man?"

And sitting next to the Bs, all the way in the backseat by themselves, looking out the window… that's the Ts. Everybody in the car respects the Ts, but everyone also… resents the Ts. It's not the T's fault, but everyone in the car feels like the Ts are making the trip take longer. Anything the Ts say gets on everybody's nerves. And then, the Ts don't even say anything bad. They be in the back talking to themselves. "Hm… I'm hot". Shut up, shut the fuck up, okay? It would be best if you rolled the window down, you… Bitch, I don't know what you…" "What? I just said I was hot. Can you pull over at the next exit? I need to use the

> restroom". "There is not a restroom for you for four states! Will you just shut the fuck up so we can get where we're going?"
>
> And when the car can't get any more tense, the Qs are hitchhikers they pick up on the road. Some white dude in booty shorts is just walking on the freeway. The Gs see him. "HM, that guy might be one of us. Hey, are you okay? You need some help?" And he comes over there with them booty shorts, leaning on the window. "Hey, what's going on fellas?" Lady. Whatever pronoun makes you feel comfortable in the back. Yeah, I don't really know where I'm going. I don't know if I'm gay, or I'm straight or whatever. All I know for sure, is that, um… I really want to get in this car". And they make him get in and sit between the Bs and the Ts. I feel bad for the Ts.

The joke discusses the hierarchy within the LGBTQIA+ community, which Chapelle can relate to an audience in a relative, albeit derogatory, way of how intersectionality can be explained. Chapelle discusses the LGBTQIA+ community politics (from his perspective). He says the LGBTQIA+ community is a different movement but "travel together in the same car". He explains that the Gs (gay men) steer the vehicle because they are the White men (according to Chapelle) who built the roads, thereby putting the White man in a position of power.

When Chapelle says the Ls (lesbian women) are the passengers of the car, and contextualises that the Gs criticise the Ls, saying, "I wouldn't have worn that shirt". Chapelle addresses the tension often present between Gs and Ls. This tension is a stereotype but cannot be refuted as baseless due to the lack of academic literature and research. The criticism of the Ls by the Gs already speaks to intersectionality. At the onset, one would think that two people who are homosexual would have a mutual relationship of understanding and being able to relate to each other. However, this relationship is threatened by physiology.

Chapelle says the Gs and Ls are in the front row, while the Bs (bisexual persons) sit in the back seat with the Ts (transgender persons). The Ts are seen to be responsible for making the journey take longer. During the trip, the people in the car see the Qs (queer persons) along the side of the road, hitchhiking for assistance to reach their destination.

In this analogy, Chapelle positions each identity of the LGBTQIA+ community: the gay men are the front runners who hold power, the lesbian women are the ones secondary to the

movement, and the transgender people are the ones slowing or upholding the movement. In this joke, Chapelle is referencing a marginalised group, a group not heterosexual, and then further categorises the identities, illustrating intersectionality. The gay man is marginalised because he is homosexual, and the lesbian woman is marginalised because she is homosexual but further marginalised because she is a woman. This joke provides an overly simplified infrastructure of intersectionality but should not undermine the intricacies and depth of intersectionality.

CHAPTER 4: Methodology and case studies

4.1 Participants, validity and selection process

The criteria for selecting my case studies began by selecting performances of Netflix comedy specials, based on Netflix having a vast and impressive footprint and a department dedicated to comedy. It has impacted the film market in all genres, and ratings increased substantially during the COVID-19 pandemic. Writer Victor Luckerson (2017) advocates illuminating Black history and suggests that Netflix has succeeded in providing all-inclusive television and video content and has been able to re-determine television norms very quickly and comprehensively, primarily due to the accessibility of Netflix (2017). Luckerson (2017) explains that due to the uniqueness of the comedy space (in comparison to television and movies), the impact of Netflix stand-up comedy specials is described as 'overnight dominance' and speaks to Netflix's agenda to push the norms of the entertainment industries to prove that these norms are unstable; and should be pressurised.

Diversity in the range of material, both in terms of where the material originates and the viewership, is a significant factor. I will analyse three female comedians from various race groups to ensure diversity and integrity. The study will compare and contrast the performativity and content of each stand-up comedy routine, noting any disparities and contrasts.

I have chosen three comedians whose ages are similar, being born in the same decade and part of the same generation and note how similar issues are raised and whether these are influenced by race.

I explored the comedy of Amy Schumer, Ali Wong, and Sam Jay for my case studies as they are American and perform in similar environments and to audiences familiar with content and context..

Comedian	**CASE STUDY 1** **Amy Schumer**	**CASE STUDY 2** **Ali Wong**	**CASE STUDY 3** **Sam Jay**
Performance title	*Emergency Contact,* 2023	*Don Wong,* 2022	*3 in the Morning,* 2020

Age	42	41	42
Race	White American	Asian American	Black American
Birthplace	New York City, New York	San Francisco, California	Atlanta, Georgia, US
Education	Towson University, degree in Theatre	University of California, degree in Asian American Studies	Unfinished degree in Communications
Years active	Since 2004	Since 2005	Since 2012

4.2 Limitations

I want to acknowledge a limitation as my initial selection included an analysis of the comedian in her Netflix comedy special, *Wanda Sykes: Not Normal. S*he has enjoyed great success in comedy, demonstrating exceptional skill and technique and biting satire. I decided to focus on subjects of similar ages (Schumer and Wong are 42 and 41, respectively), and Sykes is almost twenty years their senior. I sensed this might compromise the consistency of the study and raise issues of age that I was careful not to include.

I have chosen Sam Jay instead, and although her career began later than the other two case studies, she is a significant female African American in the age group.

Comedian	**CASE STUDY 1** Amy Schumer	**CASE STUDY 2** Ali Wong	Wanda Sykes	**CASE STUDY 3** Sam Jay
Performance	*Emergency Contact,* 2023	*Don Wong,* 2022	*I'm an Entertainer,* 2023	*3 in the Morning,* 2020
Age	42	41	59	42
Race	White American	Asian American	Black American	Black American
Birthplace	New York City, New York	San Francisco, California	Portsmouth, Virginia	Atlanta, Georgia
Education	Towson University, degree in Theatre	University of California, degree in Asian American studies	Hampton University	Unfinished degree in Communications

Years active	Since 2004	Since 2005	Since 1987	Since 2012

4.3 Research procedure and data management

I break down each case study into four categories and focus on the first ten minutes of each performance as the sections effectively introduce the audience to the performer, the manner of their entrance, how they first engage and the topic of their first joke, which all indicate attitude, relationship with the audience as well as social issues.

I begin with images of the comedians during their performances in the respective Netflix comedy special and detail elements of the analysis below:

PART A: THE SUMMARY

This section will transcribe and elucidate the first ten minutes of the stand-up performance, focusing specifically on the language, movement, and gestures on stage and the topics and stereotypes addressed within this timeframe.

PART B: THE SEMIOTIC ANALYSIS

This part will be presented in a table format encompassing thirteen categories, divided into the sign and the signifier.

PART C: THE PERFORMANCE OF GENDER

This segment will reference the three subsections that Butler (1988, p. 522) discusses, explained in the literature review (Section 2.4.2, which examines gender performativity). Part C will analyse if and how each case study was performed. The signifiers established in the semiotic analysis (under the categories: gestures, costume, makeup, and hair) will assist in determining if and how the three subsections were performed, as well as the topics and stereotypes noted in the summary of each case study. In the interest of clarity, I have renamed the three subsections:

I break down each case study into four categories and focus on the first ten minutes of each performance as the sections effectively introduce the audience to the performer, the manner of their entrance, how they first engage and the topic of their first joke, which all indicate attitude, relationship with the audience as well as social issues.

I begin with images of the comedians during their performances in the respective Netflix comedy special and detail elements of the analysis below:

PART A: THE SUMMARY

This section will transcribe and elucidate the first ten minutes of the stand-up performance, focusing specifically on the language, movement, and gestures on stage and the topics and stereotypes addressed within this timeframe.

PART B: THE SEMIOTIC ANALYSIS

This part will be presented in a table format encompassing thirteen categories, divided into the sign and the signifier.

PART C: THE PERFORMANCE OF GENDER

This segment will reference the three subsections that Butler (1988, p. 522) discusses, explained in the literature review (Section 2.4.2, which examines gender performativity). Part C will analyse if and how each case study was performed. The signifiers established in the semiotic analysis (under the categories: gestures, costume, makeup, and hair) will assist in determining if and how the three subsections were performed, as well as the topics and stereotypes noted in the summary of each case study. In the interest of clarity, I have renamed the three subsections:

1. *Sex/gender: Feminist and phenomenological views* (the body is a tool that can personify the gender through acts and gestures)
2. *Binary genders and the heterosexual contract* (how gender can only be performed in company, within the performer-audience relationship)
3. *Feminist theory: Beyond an expressive model of gender* (a person's perspective is influenced by the traditional concepts and lineage of their gender).

Analysis and discussion of the theoretical framework				
CASE STUDY 1 **Amy Schumer: *Emergency Contact* (2023**		**CASE STUDY 2** **Ali Wong: *Don Wong* (2022)**		**CASE STUDY 3** **Sam Jay: *3 in the Morning* (2020)**
The summary		The summary		The summary

The semiotic analysis Sign and signifier	Compare	The semiotic analysis Sign and signifier	Compare	The semiotic analysis Sign and signifier
The performance of gender	Compare	The performance of gender	Compare	The performance of gender
Conclusion		Conclusion		Conclusion

4.5 Ethical considerations

The Human Research Ethics Committee, Non-medical (waiver letter number HRECNMW23/09/01) granted an ethics waiver. It stated that this study does not need ethics clearance as no human interaction occurs with the case studies (see Appendix 1).

At this intersection, it is essential to remember that all performances have been viewed digitally through the Netflix streaming service and have not been observed live in real-time, which means that the version I have viewed has been edited to accommodate future viewings and streaming.

4.6 CASE STUDY 1: Amy Schumer: *Emergency Contact,* June 2023



Figure 6: Sophia Scorziello. Amy Schumer: *Emergency Contact* sets June Premiere on Netflix, 2023

PART A: Summary of Amy Schumer in *Emergency Contact*

Schumer begins by acknowledging the applause from the audience, saying, “Thank you, don’t make me like you”. She has a slightly cheeky smile, narrowed eyes and gazes through the audience, creating the tone of the performer-audience relationship for the evening. This establishes an interesting dynamic in that Schumer is known for being stand-offish and uncensored in her observations and responses and irreverent while remaining relatable. The remark “Don’t make me like you” demonstrates Schumer's irreverence while at the same time encouraging the audience to like her. She displays a vulnerability in acknowledging she can enjoy them – and perhaps there is a promise that by the end of her routine, she will like her audience.

In contrast, the slight cheeky smile reinforces her relatability, flawlessly setting up a clear performer-audience relationship. The audience cheer subsides, and Schumer addresses the age stereotype, noticing the many young people in the audience and targets a particular member, named Libby, relatively near the front of the auditorium by bluntly asking her age. “Twenty-seven” she responds. (Schumer is forty-one.) The Netflix viewer does not see Libby, as there are no cut-away images of individual audience members, but we do not hear her response. Schumer reacts by furrowing her eyebrows and pulling them together in a frown, looks at the rest of the audience, and says in a baby girl voice, “ ‘Member?” meaning remember? Indicating “cute” as everything is still “up high” and gestures to her breasts. She extends the cliché and remarks that at twenty-seven, Libby is probably still wearing heels and warns that someday she will consider ‘these’ and points to her shoes – they are white, flat Vans (a form of sneaker that do not have shoelaces, so can easily slip on and have a thick, rubber sole to prevent slipping, inventions to assist skateboarders and prevent them from losing grip on a skateboard). Schumer reinforces the ageist theme by telling the audience that hers has “orthopaedic inserts”.

Schumer continues to target Libby further. Viewers know from Schumer's comments that Libby is young and wearing heels, and Schumer suggests that she selects Libby because she is helpful for the following joke.

Schumer focuses on Libby and asks, 'Are you a drinker?' and Libby replies, "A little bit". Again, as viewers, we do not hear Libby; we hear Schumer repeat the answer for the audience, who laughs as she repeats it. She extends the stereotype of having drinking etiquette at her age (remember, Schumer is forty-one). She personalises this by disclosing her drinking habits during the tour of her show, which is being filmed to cut the footage together for the Netflix special.

Schumer says that although she drank yesterday, she did not consider drinking as she consumed less than five drinks early in the day. Schumer confesses in Libby's direction that she used to blackout after drinking but adds a subtle and quiet "last week", and the audience responds in laughter. Schumer provides a context of her never having woken up from a blackout wondering why the pilates mat was out or who had cleaned the house. Instead, Schumer wakes up from a blackout with potato skins on her eye, like an eye patch, and dried ice cream on her neck. She adds a loud "I hope" and holds for a subtle second of laughter about the regrettable acts that could happen on an intoxicated night. The resentful look on Schumer's face leads the audience to conclude that Schumer is hoping that the 'dried ice cream on her neck' is ice cream and not ejaculation or semen (in vast comparison to waking up to a clean house after an intoxicated night).

Schumer concludes the topic of drinking by acknowledging age, saying ruefully, "We cannot drink like we used to", especially since turning forty. Schumer adds a subtle comedic "again" as the audience cheers. Here, Schumer is humorously asserting that rather than her ageing by one year every birthday, she stays at her current age, forty, for an additional year and evades the idea of ageing as a woman. Schumer thanks them.

Schumer then explores women's confidence, raising how she always encourages women to be confident in their skin, but the day she turned forty, she took her skin to get lasered. Suppose one were to analyse the linear progression of this joke. In that case, Schumer begins by discussing confidence in one's skin (1) she continues onto confident women, (2) and

concludes with taking your skin to get lasered, and (3) if one were to look at the fragmented topics of this joke, it reads as if Schumer is discussing confidence in a person's skin, which would encourage a confident woman and that a confident woman would have their skin lasered. As previously discussed in section 3.2 (wrecking the wealth of stereotypes), womedy might be characterised by comedians confronting entrenched stereotypes rather than ignoring them and employing quirky or outlandish ways to address them and lampoon them (Florentino, 2018). Schumer addresses the stereotype of age amongst women and how women are often scrutinised, ridiculed and rejected as they age (which is only one of the many stereotypes that stem from the appearance of women). Schumer then lampoons this stereotype by recalling her prevalent history of advocating and encouraging unwavering confidence in women. She turns this stereotype on its head by humorously recounting her own decision once she turned forty to undergo laser treatment on her face, a procedure aimed at slowing down the ageing process. In this way, Schumer challenges the stereotype of society's rejection of ageing women. She refutes this stereotype by consistently advocating confidence among women, inclusive of ageing women, who are one of the many targets of this stereotype. However, she subverts expectations by openly admitting to seeking out a cosmetic procedure to combat ageing. This reveals a nuanced perspective on Schumer's behalf; while encouraging confidence, she acknowledges her insecurities about ageing and takes proactive steps to address them. Despite Schumer's reputation as a feminist activist and her assertive presence on stage and in her career, one could argue that her decision to undergo the anti-ageing procedure was driven by personal choice rather than societal pressure. This suggests that Schumer's actions reflect her agency rather than conforming to stereotypes, as Schumer is issuing confidence that can be achieved differently.

Schumer jokingly explains to the twenty-seven-year-old audience member, "So Libby, what laser is…" (again, a thoughtful pause for comedic acknowledgement in a laugh response). Schumer continues that laser is when you pay someone significant sums of money to shoot you in the face with a laser and contextualises the process of lasering by referencing the *Ocean Eleven* films and how, in these films, the characters are physically trying to avoid the laser beams (to avoid injury). Nonetheless, when you get your skin lasered, you essentially offer your skin to the laser rather than prevent it. Again, this confirms how Schumer

acknowledges ageing, but in the same breath, one can take away that Schumer is willing to follow through with what will maintain her confidence.

Schumer then discusses the “amazing” outcome of laser (with what appears to be approval and encouragement at this stage) and says that after being lasered, a person turns blood red, the skin falls off, and six to eight weeks later, you will be left looking (comedic pause) “the same”. The media frequently targets women as the primary demographic for anti-ageing products, procedures, and medications. For instance, these products often practise language reinforcing the stereotype of rejecting ageing, such as ‘turn back the clock' or ‘restore radiance’. In this segment of Schumer's performance, she acknowledges the prevalence of these products and procedures while subtly suggesting their ineffectiveness. Schumer’s commentary may also allude to the unattainable beauty standards imposed on women by society. Despite the availability of numerous products aimed at addressing these insecurities, many fail to deliver the promised results. This perpetuates the stereotype of ageing as undesirable, leaving the stereotype reasonably fertile, considering there is no effective treatment to prevent the ageing process.

Following her discussion of laser treatment, Schumer starts to recount her experience with filler injections. She explains that she initially received filler but later opted to have it dissolved because, as it turns out, she was “already full”. Schumer then addresses a member of the camera crew named Tom and requests a close-up of her face before delving any further into the story of her experience with filler injections.

After the camera operator creates a close-up view of Schumer’s cheeks for the audience, she begins her story about her experience with filler injections, mentioning that someone wearing a white lab coat suggested that her face would benefit from being fuller. This raises a point for discussion; individuals may be inclined to heed the advice of someone in a white lab coat due to the perceived authority associated with the garment, which fosters a sense of trust. However, in this scenario, Schumer may allude to an expert drawing attention to insecurity or even producing one (in this case, a doctor highlighting a woman’s insecurity).

Schumer adds to this by saying that she already looks like she is storing nuts for the winter and proceeds to imitate a honey badger by squinting her eyes closed and gnawing her teeth

together as if eating corn or ribs. This could be considered a self-deprecatory remark as Schumer compares herself to a squirrel or a honey badger to describe how full her cheeks are. It can be inferred that because Schumer was conscious of her full cheeks, the doctor may have introduced an insecurity not established before, creating a vulnerability between the doctor and the patient. This, again, speaks to the women-targeted products that perhaps perpetuate insecurities to profit from ineffective 'solutions' being offered.

Schumer goes on to say that once she returned home, her husband was so frightened that he asked her if she had been in a fire, to which Schumer responds, "Well, I wasn't… *not*… in a fire", another comedic pause and she adds "wait 'til my laser kicks in, you're going to be hard as a rock". While Schumer is delivering this line to the audience, she holds her honey badger expression, squinted eyes with a fixed emotionless smile that limits her enunciation when she says, "Wait 'til my laser kicks in babe, you're going to be hard as a rock". Again, Schumer uses self-deprecation to explain that once her cosmetic procedures (done to enhance her appearance) have settled, her husband will be attracted to her.

After Schumer discusses her laser and filler ordeal, she jumps into her liposuction experience and how, in record time, she managed to gain the weight back. Schumer explains that liposuction is one of the laziest things she has ever done because it indicates how she would rather have significant surgery than "be a little hungry once". At this interval, Schumer once again confronts a stereotype targeted at women, particularly body weight and the expectation for women to conform to an ideal norm. Schumer addresses the stereotype by suggesting that she felt overweight enough to consider and undergo liposuction. She then humorously undermines the stereotype (and, once again, the ineffectiveness of a medical procedure) by highlighting how quickly she regained the weight after losing it.

Finally, Schumer subverts the stereotype by stating that she would prefer to undergo a significant surgical procedure instead of being hungry. She ensures she will never be hungry as she will never let herself get into that situation; she can feel an hour away that she will be hungry, and that is when she combats it. Schumer explains that she is doing her best, that she had a baby, and that she feels she has done well regarding her physique. Schumer slowly turns with one hand above her head to nudge the audience into acknowledging how her body looks. Then, she uses her one hand to gesture downwards from her torso. After Schumer

states that she had a baby, again after a comedic pause, she adds “three years ago” and after another comedic pause, she adds “and a half”. In this analysis, we recognise the prevalent stereotype concerning expectations placed on mothers to retrieve their pre-baby-body. Schumer adeptly confronts this stereotype, subtly implying that although she views her body as “not bad”, it may not be at its peak. This subtle acknowledgement refutes the stereotype, and Schumer further dissects it by mentioning that it has been three and a half years since she gave birth. This time frame suggests that while Schumer may have felt societal pressure or even perhaps personal pressure to ‘bounce back’, she is not overly concerned with conforming to societal standards in this regard.

At this stage, Schumer starts exploring insecurities and how she was recently informed of a new flaw that has turned into an insecurity. She begins by contextualising how a stranger ‘moseys up to ask if you know how you look’. Schumer responds with a very firm “no thanks”, straight arm in front of her with a flat hand, and adds, “I am not open to that feedback right now” because a stranger never compares Schumer to a model but rather as the “fucked up cousin” of the model.

Schumer then explains her new insecurity, how a good friend offered it up, and how these experiences happen when one feels safe. The person who offers the insecurity is under the impression that one has already come to terms with it and accepted it.

Schumer discusses the story of previous insecurity that was revealed to her, which is the fact that she is short-waisted, which the friend explains to mean “when your ass goes all the way up to your armpit”. As Schumer is explaining short-waisted, she turns around, points to her bottom and runs her finger up to her armpit. Once she is done explaining, short-waisted, still with her back to the audience, she turns only her head towards the audience with a disbelieving expression. Schumer then slowly turns her body back to the audience for a few seconds; once she fully faces the audience, she gives an emotionless smile and says, “Okay, like an ostrich? Okay, cool, okay, good… good”.

The new insecurity that Schumer has recently learnt of is that she has a hump. She explained that she went for acupuncture to make sure she could still feel, and the acupuncturist very nonchalantly asked Schumer if she knew she had a hump.

After Schumer explains this, she sternly looks at the audience and then down to her own body, in which she moves one hand to her skirt waist tie. Schumer then says to the acupuncturist, “My lovely lady lumps?” and puts her one hand up to her forehead as if imitating she will soon faint and simultaneously turns her opposite knee inwards with her ankle facing the side, “Check it out right?” she says, referencing the Black Eyed Peas song ‘My Lovely Lady Lumps’, while still holding her pose; hand to her forehead and one leg askew.

The acupuncturist says, “No, a lump”, and here again, Schumer calls on Tom, the camera operator, to get a close-up of her hump. Schumer turns to the side, pulls down on the waist of her shirt at the back to reveal more of her neck, feels the hump and then turns to the audience and says, “I’m humped, like a whale or a camel or the guy that loves Notre Dame”.

Schumer says she is shocked to find out in her forties that she has been sporting a hump, and after asking the acupuncturist what they can do about the hump, the acupuncturist says he does not think there is much a person can do to resolve the hump. Schumer is visibly confused and thinks out loud, “So you just wanted me to know?”

The acupuncturist explains to Schumer that it is called a Widow’s Hump. Schumer thanked the acupuncturist but stated that she had enough information.

The acupuncturist then suggests that she try holding her neck back further. Schumer then demonstrates this act and reveals an extra layer of skin below her chin (commonly called a double chin). Schumer holds this position, looks at the audience, and allows a comedic pause for laughter.

PART B: Semiotic analysis of Amy Schumer

	The sign	**The signifier**
The word	Schumer addresses the audience directly and poses rhetorical questions to them. Schumer does not swear or use coarse language. Schumer starts with confrontational language by saying, “Don’t make me like you”, but after that, she starts using colloquial and conversational language by	Schumer demonstrates and signifies a clear direction and purpose in her performance and what she intends to portray to her audience. Schumer starts with confrontational humour, which suggests a matter-of-fact, unreserved, abrupt persona that establishes hesitation between her and her audience. This abruptness can indicate confidence as well as authenticity as she

	asking the audience questions and having an audience member respond directly. She uses phrases like "you know?' to prompt and acknowledge the audience.	communicates honesty by not filtering her thoughts; telling an audience who has paid to watch you perform to "not make me like you" suggests honesty as this is not something a performer would say to their fans or followings to avoid losing their support). However, from this point on, Schumer adopts conversational humour and directs questions towards the audience, encouraging mutual understanding between her and the audience. Schumer is perceived as self-assured and reasonable while maintaining detachment, embodying a calm and detached personality and demeanour. And her willingness to provocatively push boundaries indicates a sense of independence.
Tone	Schumer maintains a slow and controlled rhythm as she speaks and maintains a slow and steady cadence with precise punctuated deliveries on jokes delivered with a comedic pause. Schumer is calm, casual, conversational, and at times appears stand-offish. Her tone is continuously collected; she never raises her voice or breaks her stage character.	Schumer's tone indicates some control over her environment and audience. She is controlled and steady, instilling confidence. Schumer's tone is not accusatory toward her audience but rather is directed toward herself and her body – using self-deprecating humour for authenticity and honesty.
Facial mime	1. Pointing at cheeks 2. Gnawing (opening and closing mouth and teeth on an inanimate object in front of her) 3. Poses with hand (and flailing fingers) to the forehead and opposite knee facing inwards	1. Mime indicating the fullness in her cheeks 2. Mime eating corn on the cob/a honey badger 3. Mimes being a damsel in distress
Gestures	1. Crouched over with bent knees, walking side to side 2. Turns around slowly 3. Straightens her hand out in front of herself with an open palm 4. Runs a pointed finger from her buttocks to her armpit 5. Turns sideways, lowers the shirt at the back neck nape with her hands	1. Gesture signifies avoidance of beaming lasers in a heist 2. Gesture shows off body to the audience 3. Gesture stops someone from talking to her or approaching her 4. Gesture indicates her short-waist 5. Gesture indicates the hump on the back of her neck
Movement on stage	1. Relatively rigid but stern on stage, she does not often step into various areas of the stage but does distribute her weight from one foot to the other at intervals 2. Gestures are slow and controlled	1. Movement indicates control of the environment 2. Movement suggests a nonchalance in attitude

		and control of her performance
Makeup	A clean and subtle foundation on the face with dark eyeliner along her lids indicates a clear indication of makeup.	Dark eyeliner often suggests an edgy persona; a clear face devoid of harsh blush or lipstick suggests a natural aesthetic with an intentional emphasis on the eyes. An emphasis on the eyes determines the eyes as a focal point, which can contribute to a more intimate performance.
Hairstyle	Silky blonde hair, plaited in a side ponytail, appears perfectly styled/situated over the right shoulder.	Plaits are considered feminine and often suggest a conservative persona as they convey a sense of charm and simplicity. Additionally, sophistication can be projected through the elegant and graceful hair placement over the shoulder.
Costume	1. A matching cerise outfit: shirt and skirt 2. A fitted silk button-up cerise shirt with long sleeves 3. An asymmetrical, pleated, wrap-around skirt that ties at the waist and ends just above the knees 4. White sneakers/vans	1. Costime in cerise suggests a mature feminine colour. 2. Costume in silk is an important aspect to consider. Silk is regarded as an expensive fabric and could indicate a sense of importance or agency, either toward the elevated stature of the performer or the significance of the performer itself. For instance, a luxurious or expensive fabric may be chosen for events of high importance, analogous to how a wedding dress is typically more costly than a bridesmaid's dress. The button-up shirt conveys a point of masculinity as the neckline usually frames the neck and enhances the shoulder, traditionally used to enhance male attributes such as a broad chest and shoulders. 3. Costume asymmetry is considered a masculine trait in clothing due to its disorganised or unpredictable placement. 4. Costume includes sneakers as a sporty or comfortable-looking ensemble.
Accessories	N/A	N/A
Decor	1. Three large chandeliers towards the right side of the stage 2. Bar stool with a bottle of water	1. Decor indicates a formal or grandiose environment 2. Decor includes a bottle of water onstage that allows the audience to perceive Schumer as an equal despite her position as the performer. In essence, it signifies that even though the audience has paid to see Schumer perform,

		she still requires hydration like any other individual in the audience.
Lighting	Three large chandeliers towards the right side of the stage.	The soft and warm lighting provided fosters a welcoming atmosphere.
Music	Music plays for a few minutes as Schumer enters the stage.	It provides a sense of welcoming to the audience and indicates that the show is starting.
Sound effects	N/A	N/A

PART C: Gender performativity of Amy Schumer

Schumer uses the performer-audience relationship to perform and demonstrate gender. The word can be noted to illustrate how the performer-audience relationship develops. Schumer's word establishes a stand-offish relationship with her audience at first (as she says, "Don't make me like you" to her audience). Soon after, she begins slowly warming up; Schumer asks an audience member a question but responds in a passive-aggressive way. In how the audience member responds, Schumer asks Libby how old she is. Libby says twenty-seven, and Schumer says, 'Aaw, remember?'. With this, Schumer establishes a performer-audience relationship, but slight hesitation enhances her vulnerability. From here, Schumer becomes conversational and appears more friendly as she delivers each joke.

When Schumer uses facial mimes and gestures, she maintains control over her environment as she uses small movements, and her cadence is not affected by her facial mimes and gestures, suggesting a conservative physicality.

Schumer addresses the practice of gender lineage performance (categorised under gender performativity) clearly but subtly throughout her performance. Regarding the historical lineage of the female gender, stereotypes are the first concept that arises. Arguably, the role of the woman contains many oppressive stereotypes. Gender performativity (discussed in the literature review) in terms of gender lineage performance refers to the history of one's gender contributing to a person's perspective. The most pertinent topic, in terms of the study at hand, is how gender stereotypes have impacted the worldly perspectives of the respective gender. Many issues can contribute to a person's gender lineage performance. Still, in terms of this

study, the topic of stereotypes will be explored due to the clear thread of stereotypes that run through comedy and the performance of comedy, particularly in this study.

Schumer's tone becomes unenthusiastic when she acknowledges stereotypes and female physicality; as Schumer addresses Libby about age, there is pessimism and sarcasm in Schumer's voice (when Schumer asks the audience members if they remember when they were twenty-seven), and when Schumer says "cute" in response to Libby's age. The unenthusiastic nature that Schumer displays towards the ageist themes is a comment on gender lineage performance and the stereotype of how ageing women are shunned. Schumer's perspective has been influenced by the historical lineage of her female gender and presents pessimism and sarcasm in response to the female gender lineage.

The obvious way in which Schumer performs a female gender is evident in her silk, cerise outfit and neatly plaited hairstyle, and therefore, the first thing the audience sees is the clothed body that signifies mature femininity through the cerise and the choice of a shirt and a skirt. The clothed body also signifies comfortability as Schumer wears orthopaedic flat shoes. From here in the routine, Schumer does not address stereotypical female traits but uses the shock factor to proffer an identity at the beginning and slowly dismantle the identity. Schumer uses her identity as a woman as a starting marker only to deconstruct it.

4.7 CASE STUDY 2: Ali Wong, *Don Wong*, 14 February 2022



Figure 7: Clifton Prescod, *Ali Wong Embraces Unrelatability*, 2022

PART A: Summary of Ali Wong in *Don Wong*

Ali Wong's entrance contrasts with Schumer's; the stage lights brighten, and a deep, manly voice projects into the auditorium, "Ladies, gentlemen and everybody, please welcome to the stage Ali Wong". The audience applauds as an upbeat, folk-like song plays, and Wong takes three small steps onto the stage, stops, gives a cheeky smile, grins, and poses, creating a second acknowledgement from the audience. She holds the pose for a few seconds, shows a large smile, and waves a poised wave, continuing to walk to the centre of the stage. Once the applause dies down, Wong immediately comments on male comedians with better careers and more ambition, making her jealous and bitter. Men who enjoy success in their careers in comedy start dating models, actors, and pop singers, while Wong, her "very close female friend and successful comedian, is dating; (comedic pause... and then delivered in a deep voice)… a magician".

Wong covers the whole stage, walking to the far left and right, while declaring she is not being judgemental but asks if he is (and again, in a low voice) "a good magician or a great magician" in the same way that her friend is great with comedy (more than 'good'). Wong informs the audience that she has searched for the magician online, revealing that he received only two stars on Yelp. As she shares this information, Wong adopts a controlled tone and makes intense eye contact with the audience by widening her eyes. She also holds two fingers to emphasise the magician's low Yelp rating. This moment becomes noteworthy as Wong discusses women who possess "money, power, and respect", referring to her successful comedian friend. When Wong mentions 'money', she raises her thumb; when she mentions 'power', she raises an additional index finger, and so as she says 'respect', Wong now has all three fingers up to emphasise the importance of each category. The gesture suggests that the three could also incur a hierarchy among them. At this juncture, the stereotype being addressed is that women should not/generally do not strive for a successful career and are not ambitious customarily. Alternatively, she could be referring to the notion/stereotype that with a successful career, a man can attract many women of his with a successful career choosing. Wong then concludes that as a woman with 'money, power, and respect', your romantic

options decline rather than expand, and as Wong says ‘expand’ she takes a dip by bending both knees and then follows through by straightening her legs while lifting her arm straight above her head.

It is crucial to note how Wong addresses the stereotype, develops it, and then turns it on its head using another expression or stereotype. At this stage, two stereotypes are being addressed simultaneously, and both should be analysed. Wong addresses the stereotype that women should not aspire to be career-driven but should aspire to be stay-at-home moms while the partner serves as the breadwinner. Wong opposes this stereotype by acknowledging her good female comedian friend dating a below-average magician (based on the two-star Yelp review). This suggests that the successful woman (Wong’s successful comedian friend) will be career-driven while the man (the magician) will arguably have to fill the role of stay-at-home parent. Even though Wong discusses her friend’s experience of dating a man who performs inadequately at their job, it is safe to assume Wong’s opinion on this matter as she illustrates this notion through an anecdote involving her female comedian friend, subtly indicating her alignment with this stereotype as Wong refers to herself as a successful career woman. Wong highlights the stereotype's paradoxical nature by mentioning her friend’s romantic involvement with a man whose professional reputation is subpar, contrary to societal expectations. Through this narrative, Wong subtly challenges the stereotype by questioning whether her friend's magician partner matches her level of professional success, thereby subverting traditional gender norms. In doing so, Wong acknowledges and ingeniously dismantles the stereotype, offering a fresh perspective on gender roles and career aspirations.

Wong reflects on the assertion that men feel threatened by women who hold wealth, authority, and admiration; she extends this notion with a rhetorical question: “What do you think is going to happen? Your dick will be acquired in a hostile takeover?” Now, this remark discusses a hostile takeover; a hostile takeover often includes an outside company aiming to acquire the targeted company’s assets and operations without receiving formal permission from the target company. Wong is therefore comparing the male’s genitalia to the assets of a company; for instance, the genitalia can be acquired by the woman with ‘money, power and respect’ and Wong is therefore drawing a comparison between a hostile takeover in the

corporate world and the perceived threat that successful women pose to men. By likening male genitalia to a company's assets, Wong implies a parallel between the importance of these assets to the functionality and profitability of a company. This comparison suggests that men appear to view their genitalia with a similar degree of significance. Wong's analogy indicates that, like company assets are crucial to its operation, men may regard their genitalia as similarly essential.

Consequently, a powerful woman's acquisition of these assets, symbolised by her possession of 'money, power and respect', may be perceived as threatening to male dominance. By flipping this stereotype, Wong provocatively implies that a strong woman's potential to acquire a man's genitalia could unsettle him because he does believe it could happen (a person does not become unsettled by impossibility). This inversion challenges traditional gender roles and highlights the absurdity of the notion that male identity or dominance is inherently tied to the possession of genitalia.

Wong then proffers that she thinks most men have never received oral sex from a woman who makes more money than he does, to which she adds, "It is spectacular". With this statement, one can assume that Wong views herself as a mighty woman because she speaks about a spectacular sexual experience. This statement also speaks to the stereotype that women should not be seen as sexual beings. Wong addresses oral sex and then pushes the boundary by discussing how good she is at performing oral sex. This is another stereotype addressed and subsequently flipped on its head by being very unabashed when speaking about her own sexual experiences in a positive and very confident light.

Wong also questions why it would not be because if a woman has enough skill to earn money, power, and respect, she has good pattern recognition. Above that, Wong adds that someone should feel "lucky, blessed, flattered and favoured" to gain the opportunity to receive oral sex from a woman who makes more money than them because this woman has many responsibilities and duties. Yet, she chose to "get on her knees and stick your forty-thousand-dollar-a-year dick in her mouth … in your Toyota Yaris" (a Toyota Yaris is seen as an inexpensive car). Wong is explicit and clear when she reverses the already addressed stereotype of a successful man having many women from which to choose. The man now must acknowledge that a powerful woman with several responsibilities has decided to spend

her time with a man who makes less money than her. To analyse this joke further, Wong also addresses the practice that a mighty woman is not against the idea of socialising with a man who is perhaps in a lower social or financial bracket than her, which suggests a persona of open-mindedness, inclusivity and lack of elitism (specifically towards the woman in this scenario).

After that, Wong suggests that no one in the audience knows what it is like to ejaculate on the face of a millionaire. She says, “Sure, you’ve gotten head, but have you ejaculated on the head of a great American mind?” While Wong says this, she uses her index and middle finger to point at her forehead. Again, this could suggest that Wong is referencing herself in this joke.

Wong adds to the above sentiment, “Have your sperm swam in the eyes of an icon? Have you been deep-throated by the voice of a generation?” She waits for a comedic pause and adds, “I don’t think so”. Wong once again addresses the idea that she is a successful woman by subtly planting the idea that she is the one with the ‘great American mind’ as she points to her head while telling the joke. Again, the stereotype that a woman should not enjoy sex is dismantled in its entirety. Wong has previously acknowledged and discussed that she is a sexual being. Now, she is advocating that any sexual intimacy with her is a privilege as she describes the male attributes of sexual practice, for instance, ejaculation, being deep-throated, as well as discussing sperm.

Wong explains that it is improbable that any straight men in the audience know what it is like to ejaculate on the face of a millionaire. Firstly, because there are very few self-made female millionaires, and within that pool, very few of these women would let a man ejaculate on their face, to which Wong adds, “There are three of us”, and she explains that she is not sure who the other two are, as she questions the audience with “do you think Ellen is going to let you come on her face?”. This statement confirms the speculation that Wong is referencing herself in most or all the sexual experiences she discusses in this stand-up performance. Wong then contextualises further: "Do you think Oprah will let you stomp on all her vegetables?” This sentence is interesting because Wong is now comparing stomping on someone’s vegetables to being ejaculated on by a man on the face. The example of stomping on someone’s vegetables alludes to a hostile and disrespectful connotation. Because of this,

Wong has now attached self-deprecation to the oral sex practice mentioned above. Over and above this, Wong has admitted that she has allowed a man to ejaculate on her face, which falls into the category of self-deprecation. Wong suggests that Oprah Winfrey and Ellen DeGeneres are more respectable women because Wong would allow someone to “stomp on her vegetables”.

Wong takes a long pause and says the following statement in a deep voice; “I love to be come-d on the face” because it is nasty and it is straightforward compared to performing oral sex on a man. Wong explains that performing oral sex is very physically taxing because of the “choking and the eye-watering” (here, Wong begins to move her head back and forward towards and away from the mic to make a gesture of performing oral sex) and if a woman wants to “keep it one hundred you have to add the pepper grinder in" to which Wong adds the gesture of grabbing the mic with both hands and manoeuvring her hands towards and away from each other as if she is “tightening something”.

Wong explains that every time she gets a deep tissue massage, the massage therapist asks if she works at a desk because her neck is so stiff, to which Wong responds with, “No, I sucked dick last night, and now I can’t look to the left”.

There are many aspects to unpack in this section. Firstly, one should note that Wong has already very successfully addressed the stereotype that women should not or do not enjoy sex. Wong lampooned it, and then she flipped the stereotype on its head by self-deprecating herself and suggesting that Oprah Winfrey and Ellen DeGeneres are more respectable than she is. Wong has stayed with this stereotype and has taken it even further than she has any previous stereotypes. Now, Wong is unabashedly telling the audience that she enjoys being ejaculated on because it is easy and that she likes being “nasty”. The stereotype (that women should not or do not want sex) stems from the historical idea of men being able/encouraged to vocalise their sexual desires to their sexual partner with the sole intention of the partner fulfilling these desires. In this way, the sexual partner (arguably the woman) is there to listen and, in turn, serve a purpose, making the partner more of an object or a servant rather than a person. Wong is now saying that she likes to be ejaculated on because it is easy. This throws the stereotype for a complete loop. Wong is indistinctly taking a different approach to this stereotype; in this discussion, Wong, as the woman, is seen as the servant, but she is saying

that she is serving a purpose and fulfilling a desire. However, it is easy, so she does not mind it. Wong is ultimately reimagining the stereotype, reendowing the repressed party's power.

Secondly, Wong starts discussing how performing oral sex gives her sore muscles because she “can’t look left” afterwards, and she has to go to the masseuse to massage the aching muscles in her neck. Wong seems to associate performing oral sex with a physical workout because her muscles are now stiff.

Wong then discusses that above all the physically taxing labour that is required when performing oral sex on a man, a woman also needs to perform, and the performance includes pretending and telling lies. Wong explains that women have to tell the lies for the men to ejaculate faster and adds, “The lies will set you free”. Once the man has ejaculated on the woman’s face, Wong discusses that the first job for the woman is to be enthusiastic. The second assignment is not to laugh while “this grown ass man is straddling your rib cage, looking down at you in a very unflattering way with the Jabba-the-Hutt double chin and gets possessed by the holy spirit” to which she parts her legs and positions her hand on her crotch areas as if grabbing hold of something (to simulate a man holding his penis) and then mimes a very subtle shiver (to simulate a man ejaculating). While performing these gestures, she says, “Mommy, watch me, pay attention”. After this, she laughs aloud to the audience and bends over with her hand on her bent knee. She laughs for a few seconds, purses her lips, and regains composure.

With this joke, Wong discusses two stereotypes and uses the stereotypes to address each other. The first stereotype is that a woman partakes in sex to fulfil the partner’s (man’s) desire because women do not/should not enjoy sex. This stereotype was also mentioned in the previous joke. The second stereotype is that women should be homemakers and should tend to the children. Now, Wong speaks to the first stereotype of fulfilling a partner’s sexual desires by explaining how tiresome oral sex is to perform, encouraging the audience to believe that she does not enjoy performing oral sex. This feeds into the idea that the woman partakes in sex to fulfil the partner's desire rather than partaking because she wants to.

Wong then says, “Mommy, watch me”, alluding to a mother watching her kids and fuelling the stereotype of women being caretakers.

Interestingly, Wong uses the second stereotype to address the first stereotype. Wong is using the idea of being a caretaker to her kids as the outcome of satisfying sexual desires. Wong is implying that once she has performed her sexual duty, it is as if the child has been taken care of, and this suggests that her sexual partner (the man) is a child.

Wong discusses how men, particularly young men, are not fond of women with money, power, and respect because a man cannot tell this woman what to do. Wong adds that young men seek out the qualities of a "chilled" woman to bargain about this quality. Wong describes this further as she puts on a deeper and more gruff voice; “Dude, I’m dating this new chick. She is so chill. She lets me do whatever I want. She is so chill because she’s dead inside. She’s like a corpse with tits. It’s awesome. She’s chill”. Wong then explains that she has never wanted to date a man who is “chill” because “Chill don’t pay the bills”.

Again, Wong is addressing a stereotype, lampoons the stereotype and then flips the stereotype so that the repressed or oppressed gains power. Wong talks about the stereotype of women being often seen as problematic and how men seek women who are low-maintenance to avoid nagging. Wong lampoons the stereotype by adding the phrase “she’s so chill, she’s like a corpse with tits” and then flips this stereotype completely. She addresses the stereotype, adds context to it, and then flips it on its head by saying that she would not want to date someone who is chill because someone who is chill would not get the bills paid. Wong has now flipped the stereotype of how, generally, a woman would rely on a man to pay their bills. Nevertheless, she has now questioned the stereotype by informing the audience that only a particular type of man can help with a person’s bills.

PART B: Semiotic analysis of Ali Wong, *Don Wong*

	The sign	**The signifier**
The word	Vulgar, harsh language, clear and enthusiastic, raw, explicit. Wong’s enthusiasm and mobility in her speech demonstrate physical humour and engagement. Wong speaks in a cadence that differs throughout her performance.	Vulgar and harsh language suggest that the performer is aware of a specific audience demographic that will appreciate her style (this establishes a successful career), indicating a level of confidence and self-assurance. Wong is precise, articulate, and opinionated in her delivery, presenting her material casually yet assertively. This approach implies confidence in her viewpoints and leaves little room for alternative perspectives. Wong’s variations in cadence throughout her

		performance signify a variety of characteristics, which offer a dynamic and unpredictable performance for the audience.
Tone	Wong is animated, bold, witty and loud. Wong employs an accusatory tone in her performance through her directness in questioning male power (compares the male genitalia to corporate assets in terms of how men view their genitalia).	These attributes suggest a sense of confidence, but Wong's accusatory tone offers the audience a sense of resentment. Wong criticises and complains about many things throughout her set and proffers a direct, unquestionable idea of her own opinions (mostly about men and their implied power). Wong's accusatory tone creates a sense of cynicism in her performance.
Facial mime	1. Shifts her head from side to side in precise intervals to align with the syllables of the word 2. Sticks her tongue out (with the microphone moving to and away from her mouth) 3. Wong has her free hand (the hand not holding the mic) in an open palm around the back of her neck and stiffly tries to look to the left	1. Mime by Wong says spec-tac-u-lar and shifts her head with each syllable to signify and emphasise how significant the meaning of the word is 2. Mime signifies the act of performing oral sex on a man. Wong also adds a sound that resembles choking while performing the mime 3. Mime signifies her explaining to her masseuse how her neck is sore
Gestures	1. As Wong enters the stage, she curves her hands with her fingers concave while her thumb faces down. Her thumbs are touching each other while the fingers from one hand are touching the other hand (to show the shape of a heart) 2. Holds up two fingers 3. She bends both knees and as she straightens her knees, her right hand reaches above her head 4. She lifts her hand in a fist and moves forward and back while she taps her foot on the floor 5. Her hand is in fists, with her index and middle finger pointing towards her forehead 6. Moving her arms in consecutive small circles away from her and then uses her index and middle finger to point to each of her eyes at the same time 7. Her hand is in a fist with her index and middle fingers pointing towards the floor, and then she	1. Gesture signifies her appreciation and admiration towards her audience. 2. Gesture signifies the inadequate Yelp review of the magician. 3. Gesture shows Wong holding her hand above her head to signify how the dating pool. 4. Gesture signifying knocking or tapping on a door to seek entry; 'opportunities knocking at her door'. 5. Gesture signifies that she is communicating her mind. 6. Gesture signifies a swimming (doggy paddle) motion and emphasises the act of looking into someone's eyes. 7. Gesture signifies a downward position as she points to the floor and then emphasises her voice (by pointing at her throat).

	points at her throat 8. Moving hands towards and away from each other while holding the microphone (as if tightening something) 9. She bends her knees with her feet apart while she lifts her heels in intervals, and holds her chin back and towards her chest 10. Bent knee, her free hand (hand not holding the mic) is rounded and is held to her crotch, moving back and forward 11. Bent knees, with hands on her knees, and she laughs	8. Gesture is imitating the practice of an intimate sex act on a man. 9. Gesture signifying the act of a man ejaculating and is emphasising the man's facial expressions that accompany ejaculation. 10. Gesture signifying a man who is receiving a hand job. 11. Wong laughed at her joke with the audience after telling the joke. Gesture signifies a human aspect of Wong in which she breaks character as she has not yet laughed at her jokes in the performance.
Movement on stage	Covers the surface area of the stage frequently.	This encourages an aura of enthusiasm and energy and signifies an evident effort of wanting to engage with the audience across the stage (from left to right).
Makeup	Clear face with subtle makeup, no harsh dark lipstick or eyeliner.	This could suggest multiple personas, a childlike and innocent persona, or an approachable and authentic character.
Hairstyle	Black, sleek, long hair in two plaited ponytails, one over each shoulder.	Plaits are often associated with schoolgirls or youth and femininity, again offering the persona of being innocent and girly. It can also suggest an image of practicality (considering that Wong is quite physical on stage).
Costume	Tightly fitted red and black animal printed dress, thigh length and long sleeved with a high neckline and sneakers Big gold hooped earrings	A tightly fitted garment suggests a person is comfortable because they emphasise their body. In this case, Wong emphasises her body, accentuating her feminine build. The long sleeves indicate a modest quality. The length of the dress allows Wong to display her legs, which encourages us to think that she is fond of her legs and would like others to observe them. The sneakers suggest a tom-boyish look, which creates ambiguity in Wong's look.
Accessories	N/A	N/A
Decor	Bar stool/high chair and a bottle of water	The water bottle lets the audience see the performer as more 'human and realistic', Generally, a performer on stage is seen as an entity and, in turn, is not necessarily seen as 'human', The water bottle therefore encourages the intimate nature of stand-up comedy by allowing the audience to see the performer

		as a human being (who needs to hydrate like the people in the audience).
Lighting	Yellow lighting on the stage	This type of lighting can signify a feeling of warmth, comfort, happiness and joy, which effectively makes the audience more comfortable.
Music	Short, uplifting music as Wong enters the stage	The uplifting music lets everyone know the show is starting and sets the tone for the performance. It also welcomes the audience as the entrance music is the first interaction between the stage and the audience.
Sound effects	N/A	N/A

PART C: Gender performativity of Ali Wong, *Don Wong*

Once again, the most significant nod towards Wong's gender is how she presents herself. Wong wears a long-sleeved, leopard-printed, skin-tight dress that stops mid-thigh. This suggests a femininity, or even sexuality, that Wong wants to convey; a tightly fitted dress enhances the female form and draws focus to the body's shape. However, Wong also wears two neatly plaited ponytails that fall along each shoulder; plaits and ponytails denote a sense of childhood or playfulness amongst young girls. Many young people plait their hair during rigorous activities to keep it out of their faces. Perhaps this is Wong's purpose, too, while performing.

Additionally, Wong also wears sneakers to tie up her ensemble, which could suggest the importance of comfortability or portray informality because, traditionally, sneakers are not paired with a tightly fitted dress. Arguably, the sneakers could support the idea of rigorous activity; Wong plaits her hair to keep her hair out of her face and wears sneakers to endure the stringent activity, associating performing stand-up comedy with thorough activity.

The takeaway is that Wong wears a tightly fitted dress that enhances her form but negates the idea of sexuality by wearing playful, childlike plaits and sneakers.

Wong's clothed body is the first the audience sees of her. Wong could imply female sexuality (through a tightly fitted dress) with a spin of efficiency, utilising plaits to keep her hair out of her face during her performance, and comfortability by wearing sneakers.

Assuming Wong associates performing stand-up comedy with rigorous activity can be substantiated by the degree of physicality that Wong employs throughout her performance. Wong's facial mimes and gestures are large and definite. For example, Wong uses the microphone to signify a penis and performs gestures that signify performing oral sex. Wong has her hands wrapped around the microphone, and she gestures the microphone repetitively, to and away from her open mouth. As she is doing this, Wong's feet are far apart, and her knees are bent, signifying a stable position. After she moves the microphone to and away from her mouth a few times, she begins making gagging noises that get louder and longer than the previous noise as the microphone moves quickly. At this stage, Wong's cadence has sped up, along with her movements, as if she is associating the idea with a climax or ejaculation. The high level of physicality in this joke could support the assumption that Wong indeed views performing stand-up comedy as taking part in rigorous activity and, therefore, takes a practical approach in her appearance, wearing plaits and sneakers. On a superficial level of performing gender, Wong opposes that women should prioritise appeal over comfort and effectiveness. Wong chooses clothing conducive to a compelling performance, establishing a clear line of priority: Wong's performance.

In Wong's performance, gender lineage influences her perspective. Throughout Wong's performance, one can note a clear theme of an accusatory tone, in which Wong criticises and complains about many topics that involve the power position of the man and how men compare their genitalia to corporate assets.

For example, Wong says accusingly that the dating pool for successful women progressively declines as their careers grow. In contrast, the dating pool for successful men expands as their careers develop. She amplifies gender inequality and criticises it publicly. This resentment speaks to the morbid history associated with the lineage of the female gender.

4.8 CASE STUDY 3: Sam Jay, *3 in the Morning* (2020)



Figure 8: Maddison Tyler, *Popsugar,* 2021. Online Image.

PART A: Summary of Sam Jay, *3 in the Morning*

Sam Jay's special (2020) starts with a barber tentatively tending to her short black hair with a razor. After that, the viewer moves into the arena where Jay will perform. Jay then addresses the audience with a "Holy shit, what the fuck is up Atlanta?" The audience screams as they acknowledge Jay's entrance, which could also suggest a response to Jay's question.

Jay continues and says, "This shit is fucking amazing, man. Wow". Jay explains to her audience how surreal it is that she is performing her own stand-up comedy special/show and that all the emotions settle after digesting that this is *her* show and that she is "doing the shit" that she set out to do. Through this, the audience applauds and screams in acknowledgement, excitement, and possibly even encouragement. Jay is in disbelief as she explains how she has "come full circle" because the last time she was in Atlanta, Jay had been intimate with a man "down the road". Because Jay states this so boldly and unapologetically, the audience feels safe enough to laugh at the idea of Jay being sexually intimate with a man and that, at the

time, Jay had not yet realised her lesbian sexuality. Another point of interest is that Jay is talking about her accomplishment of performing a Netflix comedy special and how her life has ‘come full circle’. The circle contextualises her life as cyclical because she was sexually intimate with a man during her previous trip to Atlanta (however, the timeline is challenging to determine as Atlanta is Jay’s hometown). The audience is under the impression that Jay’s life has ‘come full circle’ because Jay has successfully achieved a Netflix comedy special. Jay alters direction to discuss her sexuality, suggesting that her life has ‘come full circle’ because when she was in Atlanta, she had not known she was gay, but now she knows.

Jay is a Black woman who has openly discussed her lesbian sexuality. She appears to have no makeup on. She is wearing a yellow and navy striped, collared polo shirt paired with blue jeans and sneakers.

Jay explains just how outlandish this is because every time she thinks about it, she believes, “Bitch, you were sucking dick. I don’t like dicks at all”. Jay explains further by saying she won't wear a dick (a strap-on) even when women ask her to.

Jay then concludes by saying, “the shit we’ll do to fit in” (referring to her performing oral sex on a man) while all she wanted to do was “be friends with my friends” and be able to discuss how salty male genitalia tastes.

This is an exciting topic as Jay touches on the dynamics of friendship. As a viewer, it is safe to assume that Jay is referring to the dynamic of female friendships as she is discussing performing oral sex on a man. At the same time, she had not yet identified as a lesbian, suggesting that the people she was in communication with here were also performing oral sex on men, were not lesbians and were, therefore, heterosexual women. Jay explains that she was discussing performing oral sex on a man with her women friends in an attempt to fit in with her friends, which brings up a notion that negates the traditional stereotype of women not discussing sexual practices (in public or with those who are not their sexual partners). Jay is now using the notion of discussing sexual practices to better get along with her female friends and make a connection. This suggests it is common practice amongst Jay’s friends. Her friends use the discussion of sexual practices to establish a connection and, therefore, create friendships. This is an example of defying stereotypes; not only do the women defy the

stereotype by discussing sexual practices with each other, but they also use this to initiate a friendship and determine and strengthen companionship.

Over and above this, however, Jay explains that she would like to add the, perhaps vulgar, detail of stating that male genitalia taste salty. This is what turns and lampoons the stereotype and positions the stereotype in a place of absurdity.

In real-time, Jay is a lesbian who presents in a masculine way and has discussed her sexuality publicly. With this in mind, perhaps the above conclusion may seem bland, which speaks to intersectionality (see further analysis in Chapter 5: Discussion).

Jay further adds to the joke that she never felt she excelled at oral sex with men and labelled herself as a "D minus dick sucker".

With this statement, Jay has taken the stereotype mentioned above and flipped it even further by concluding that even though discussing sexual practices with friends to further a connection with them, she altogether does not excel at the practice being discussed by her friends. Here, it may be safe to assert that discussing a weakness (a practice one is not good at, regardless of what the practice is) with a person could be what would determine a substantial connection and form a friendship, as a person is displaying vulnerability and acceptance. However, the weakness (not excelling at performing oral sex on a man) is something that Jay could not discuss with her friends, as this intertwines with her lesbian sexuality. It ultimately would hinder a strong connection from being planted with her friends. Due to Jay's hidden lesbian sexuality (the colloquial term is 'closeted'), Jay could, therefore, only discuss the practice of performing oral sex on a man to establish a relationship with her friends, which does manifest a connection, but a limited one.

Jay then discusses travelling and how, in her opinion, she stupidly brings her partner along, saying "I, love my girl, I bring her everywhere, but also, uh… fuck her, you know". Jay says she is with the girl of her dreams, she loves her partner, but simultaneously she thinks, "Oh, shut the fuck up and go away".

Here, Jay uses curse words and conveys an essence of vulgarity and aggression, which is predominantly associated with the male persona.

Jay contextualises by explaining that she and her partner should travel, but they should travel separately; Jay should go to London, and her partner should go to Hawaii, and a few days later, they will switch. So essentially, they are experiencing the same thing but at a different time and not together and can converse about the experience without "having to be in the same fucking space" because the space is what causes the friction in their relationship. The undertones of aggression, hostility, and detachment in this dialogue, when Jay starts discussing her partner, are points of interest and initiate an analysis.

Due to Jay's aggression in discussing her partner, one can posit that she assumes an assertive role in the relationship. Jay essentially states that she would ideally like to re-write her structure to enable both parties to travel and enjoy themselves separately. This suggests that Jay is mindful; she would still like her partner to travel, just not with them/her. However, Jay voluntarily communicates her unwillingness to travel with her partner. Due to the context of the dialogue, one can assume the situation has commenced and that a similar scenario has occurred.

Jay provides us with an example of how she recently visited her home town, Boston. However, she does not see much because her *whole* family is there (comedic pause) "...like all of them" (and then gives the audience a slight chuckle). Jay says she wanted her partner to meet her community (or, as Jay calls them, her *people,*) and her partner met Jay's favourite uncle. Jay discusses how her favourite uncle is the favourite uncle because he always enquires about if Jay is still gay when he sees her, and she enjoys joking with and baffling him by saying, "No, I'm back suckin' these dicks".

Because this question is open-ended (Jay's uncle is not asking her if she has met a man, which would imply a direction and a desired outcome to the question), it cannot be assumed that Jay's uncle is unaccepting of her sexuality. Therefore, Jay answers the question in a way that would baffle someone rather than oppress them and create conflict.

Jay further contextualises the home visit to Boston with her partner and how her partner met her family and then met her high school friends. Jay explains that it was all "comfortable and great" until they saw the man that Jay had lost her virginity to, and the reason it became

uncomfortable, Jay says, is because “Me and him look the same now” in terms of their haircut and choice of attire.

This brings to mind an exciting aspect of same-sex relationships and initiates intersectionality. In this scenario, gender and sexual orientation are the factors that establish intersectionality because both Jay’s gender (female) and her sexual orientation (lesbian) are marginalised identities or categories (discussed in section 2.2, which explores gender performativity.

One assumes a gender to avoid ridicule and to establish a position in the world (Butler, 1988, p.520) and gender stereotypes, so stereotypes have been perpetuated among marginalised people. For example, in a lesbian relationship, someone who is not a homosexual cannot relate to this relationship. In response, they adopt positioning the male role onto one of the women to understand the relationship better. If one of the women can be even loosely viewed as a man, the relationship can become relatable because it speaks to a heterosexual relationship.

This is the stereotype that Jay is referring to in this joke. In most cases, the man's position would be placed on the more masculine-presenting partner. Jay explains that she is the woman in the masculine relationship, and she addresses the stereotype by acknowledging that she now looks like a man.

This is an example of intersectionality in comedy because it is a stereotype among marginalised people with an origin in a traditional stereotype. The audience's laughter indicates that the joke was understood, which means that the topic of intersectionality is becoming more well-known.

Jay says she spotted him first, and her thoughts were racing. She says, “I sucked his dick”, as she uses one hand to cover her face, and adds, “Because as a dyke, when you see all the dicks you sucked, it’s like haunting, you know?”

This could arguably speak to the stereotype that women should not be promiscuous. In this joke, Jay is acknowledging her promiscuity and is embarrassed about it, not because of the stereotype but because Jay is a lesbian. This is a clear example of Jay addressing the stereotype and defying it.

Jay explains how she was worried, but the man acted nonchalantly by giving her a nod that she interpreted as "You sucked my dick", to which Jay acknowledges with an; "I know, I know". And with this statement, Jay takes the stereotype to a level of absurdity.

Jay reflects on how strange this interaction was because she was in her hometown with her partner and was trying to be the "best man I could be" but runs into a man that she performed oral sex on and thinks to herself, "I don't like this at all". As she says this, she puts her hand on her hip. This is again a clear example of intersectionality and how Jay acknowledges the stereotype (that one of the women in the lesbian relationship is 'the man').

Jay analyses the interaction by explaining that this man approached Jay and her partner and said, "I just need to say this. I just hope I'm not the reason you're like this". Jay is flabbergasted and addresses the audience with, "Do you think your fifteen-year-old dick swayed me in any direction?" and then states that some people are gay and "just do not know it".

Here, Jay defies the stereotype at hand by undermining the power of the man's genitalia. Jay blatantly ponders aloud, questioning if the man is under the impression that his genitalia altered Jay's sexuality. Jay expressively implies confusion but denotes that the man in question does believe that his genitalia is powerful enough to sway a person into a sexuality that is a struggle (in understanding her homosexuality and outsiders not understanding it).

Jay now delves into her sexuality and explores how people around her knew she was gay before she did. She reflects on how she received a "Duh, bitch" from her friends upon telling them about her sexuality, with Jay questioning them, "Really? Really? … you knew this whole time?" and the audience provides a laugh. Jay explains how she did not like sex and could not relate to her friends when her friends would talk about sex. Jay says that her friends would tell her that she "would feel it in her stomach" when it was right, to which Jay says, "That's my least favourite part". So, Jay thought she needed to work harder and concentrate more, and she would eventually enjoy it; "focus on the dicks you're sucking… visualise", is what she would tell herself as she performed oral sex on men.

This brings to mind the same stereotype that Ali Wong also addressed, which perpetuates the idea that women do not or should not enjoy sex. Jay is addressing this stereotype and agrees

with the irony. Jay is saying she did not want sex (in agreement with the stereotype) and started enjoying sex when she discovered sex with women. This is arguably traditionally challenging to the norms of society and stereotypes, as perhaps these traditional stereotypes did not consider same-sex intercourse within the stereotype.

Jay then discusses matters of representation and how important it is for a person to be able to see themselves in the world. Jay says that because she is from Boston, she knew a person could be gay, but a person could not be Black and gay. Jay says that White lesbians who "drove Subarus and had long underarm hair" caused her to think, "No, that's not what I am". Jay then examines how they had one Black lesbian in her neighbourhood. This *one and only* Black lesbian was on drugs, which Jay interpreted as a lesbian lifestyle and thought *that* life was not for her and reverted to the practice of: "focus on the dicks you're sucking… visualise… and make something of yourself", and the audience laughs. Jay informs her audience that until 2012, a person could not be both Black *and* gay in Atlanta and subsequently decided she would stay with men. This is again a clear nod to intersectionality, being Black *and* gay.

In this joke, there are many facets to break down. Again, Jay addressed the stereotype that perpetuates the idea that women should not discuss their sexual endeavours and that this is considered private. Jay is now using the stereotype (discussing herself performing oral sex on men) as a way to conceal her queerness, which nods to the idea that queerness is shameful, or at least that is what Jay is denoting.

Jay now starts exploring her first sexual encounter with a woman and how oral sex with another woman made "her world open the fuck up". She began to realise the hype that surrounded sex and came to the realisation that sex is not only a job because, until this encounter, Jay firmly believed that people only participated in sex but did not enjoy sex. But now, Jay says, that is because she has had oral sex with a woman and feels like a winner and in control and adds, "This is where I was supposed to be; in the pussy'.

In the previous joke, Jay creates a sense of shame about her sexuality, but in this joke, we see a very defiant position with Jay taking her power back after establishing her place in the world. Jay is addressing, once again, that women are not known to enjoy sex – Jay, as she did

previously, acknowledges the stereotype in a very tongue-in-cheek way. Jay believes the stereotype, defies it, and then lampoons it rationally. Jay not enjoying sex (with men) is very obviously something that Jay would not want, based on her previous revelations in this performance. And then Jay pushes the boundary further (moving more into the lampooning space) by very calmly expressing, in the spirit of being transparent and very clear, that she belongs in a woman's vagina, and that is where she has found her purpose. In this way, Jay has lampooned this joke often, distancing audience members from the original stereotype (women should/do not enjoy sex) to embrace the punchline of the joke – finding a purpose in a vagina.

Jay discusses her partner once again and says that she knows she will only be with one woman from here on out because she is in love and will "only be in one pussy forever, which is weird, because it's not always great, right?" Jay contextualises her previous statement by positing that being intimate with the same person over a long period provides highs and lows and that Jay and her partner have been intimate since she was twenty-two, so naturally, Jay cares about her partner, "but the pussy, I don't give a fuck".

Jay appears to be talking derogatorily only of her partner's vagina but not her partner herself. Jay separates the vagina from the person. Jay speaks degradingly about her partner's vagina but assures her that she loves her partner. This could be a comment on the discussion surrounding lesbian intercourse and how lesbian relationships are often implied to enter a stage of celibacy (colloquially known as "bed death"). Still, the relationship remains successful because of the stable emotional connection. Both partners are satisfied with receiving emotional support without or rather than sexual intercourse.

The stereotype that we can associate with Jay's joke, once again, is the stereotype that women should not or do not enjoy sex and that the woman partakes in the sexual activity to satisfy the partner. This stereotype is based on the vagina and perpetuates that the vagina is what serves the purpose, not the woman, which does not separate the woman from her vagina, as Jay has done in her joke. The exciting thing to ponder here is: Is the stereotype and the joke so offensive because a woman (Jay), who was once the oppressed party of the original stereotype, is now using this stereotype to her advantage (because Jay is assuming

the assertive and dominant position in the relationship, which is associated with the man) by essentially degrading her partner by separating her partner from her partner's vagina?

In this case, it is a woman (Jay) who is taking control of the stereotype (that once oppressed her) but is still using the stereotype in the same way it was originally meant, as a degradation of female sexuality – and Jay is a woman. This is perhaps the start of intersectionality in humour and how intersectional female comedians perform gender through clothing and costume.

Jay discusses how she and her partner recently went to Europe for three weeks, which was "a big fucking mistake", and that the planned trip started going awry as soon as the packing commenced when her partner started packing a third bag. Jay says she was confused because her partner has two arms and poses a rhetorical question to the audience: "How' you packing three bags with two arms, baby girl? … you don't have enough arms for the bags you are packing".

Jay and her partner get to the airport, but Jay's partner has an additional bag, which Jay does not respond to lightly. Jay is angry because her partner forgets that Jay is not a man and, therefore, is not chivalrous, and Jay's partner struggles with the bags. Jay does not help her partner with her bags; instead, she thinks, "Bring fewer bags".

In the previous joke, Jay encompassed the stereotype that oppressed women, which demonstrates that she either sees herself as similar to a man or that she is acknowledging the stereotype and playing into the degradation of women because of her intersexuality. However, in this joke, Jay clearly expresses that she is not a man and has no courteous will; therefore, she does not help her partner pick up her many packs.

Because Jay is not playing into the idea of being a man in this joke, it is safe to assume that Jay is playing into the degradation and oppression of women, and due to her intersectionality, this does indeed initiate a different dynamic compared to the humour created by female stand-up comedians who are not categorised as intersectional.

PART B: Semiotic analysis of Sam Jay, *3 in the Morning*

	The sign	**The signifier**
The word	Jay begins her special by addressing the audience, saying, How crazy is this?" (referring to her performing her own Netflix comedy special Jay then very soon jumps into personal details of her sexual history. Jay is assertive and conversational in words, and she uses a steady cadence to mirror a casual conversation with friends. Jay uses colloquial language by using the slang word 'ain't'.	Jay establishes a bond with the audience almost instantly. When Jay acknowledges how unimaginable it is for her to be performing her own Netflix comedy special, she recognises she is new in the field of comedy, which acknowledges the support from the audience, which has amalgamated into Jay performing her own Netflix comedy special. This statement humbles Jay to the audience, possibly generating respect, as she acknowledges their contribution to her success, signifying a sense of self-awareness and humanity. Jay introduces and discusses her sexuality soon into the performance and in a comical way. This creates a sense of nonchalance towards her sexual history before her coming out as a lesbian woman, which establishes a safe space with the audience in terms of Jay's sexuality and perhaps also the sexuality of the audience members. Jay uses colloquial and informal language, demonstrating unity and a sense of bonding with her audience, and she adheres to her authenticity. She appears to be recreating a comfortable conversation with friends, establishing a performer-audience relationship.
Tone	Controlled, soft, clear, and composed. Jay's tone presents as calm and collected, and even as she addresses coarse material (like performing oral sex and the taste of male genitalia), she maintains her composed persona.	Jay's controlled tone also speaks to her confidence and control of her environment. Jay's tone never adopts accusatory themes, even when she discusses stereotypes, which could suggest an idea of peace and acceptance towards society by accepting her position as a homosexual and not questioning it.
Facial mime	1. Holds the mic horizontally to her mouth, and thrusts back and forwards 2. Covers her face with her free hand (hand not holding the mic)	1. Mime signifies performing oral sex on a man. 2. Mime signifies embarrassment or shame as it seems a person is trying to hide
Gestures	1. Crosses her arms under the microphone and shakes her head. 2. One hand behind her, the back of the wrist was on her side, and her palm was facing out	1. Gesture signifies confusion towards Jay, 'sucking whole dicks, just putting them in my mouth'. 2. Gesture, Jay signifies a flamboyant personality to join in with her feminine friends.
Movement on stage	The stage is relatively tiny. Jay moves slowly from one end of the stage to the other several times	This suggests Jay works towards inclusivity and engagement of the audience.

	throughout the performance but also takes the opportunity to stand still.	
Makeup	No makeup present.	This could signify authenticity, empowerment, and even inclusivity of gender norms in terms of representation.
Hairstyle	Jay has a very short buzzcut, with even shorter hair on the sides of her head.	This could signify a masculine persona.
Costume	Jay wears a collared polo top. The sleeves are striped in yellow and navy, while the top bodice is mostly navy. She wears fitted denim jeans and bulky white sneakers. An interesting part of Jay's costume is a licence-plate-like text written on white material that says "02119 – 3102", the zip code of Jay's hometown, Metro Boston.	A collared shirt signifies a sense of formality and sometimes masculinity. However, because the polo knit shirt is not formal attire, it means a casual aesthetic, suggesting Jay opts for a masculine casual persona. Jay uses her costume to demonstrate the importance her hometown holds for her.
Accessories	Jay wears a chunky watch on her left hand and a solid gold bracelet on her right. She also sports a chunky gold chain necklace tucked into the shirt's collar, only seen from the front. She wears two small silver studs in each earlobe.	Jay's jewellery is chunky and abundant (watch, chain, earrings, and bracelet), creating a focus point. Individually, the pieces are small, but the amount of jewellery is minimal. Jay's chain necklace and chunky watch are masculine, while her dainty earring studs and bracelet are feminine.
Decor	N/A	N/A
Lighting	There are a few subtly lit spotlights behind and beside Jay.	The lighting is intense and creates a simple, intimate, and casual environment.
Music	Soft jazz music plays as Jay enters the stage.	This signifies welcoming and initiating the start of the show.
Sound effects	N/A	N/A

PART C: Gender performativity of Sam Jay, *3 in the Morning*

The simplicity of Jay's gender performativity is in her appearance. Jay presents as masculine, with short hair and a collared shirt. From there, Jay's gender performativity becomes complex.

Regarding the lineage of gender influencing perspective, Jay's tone does not exhibit cynicism or criticism of the woman being portrayed as oppressed in many stereotypes as she uses the stereotypes to place herself in a position of power.

For example, Jay addresses the stereotype that women should not or do not enjoy sex by essentially agreeing with it and then uses her sexuality to apply a spin on this stereotype. Jay is a lesbian and discusses how she did not enjoy performing oral sex on men, which is Jay agreeing with the stereotype. However, the implied irony is that she does want sex, but not with men.

This framework provides additional insight into the three stages of Womedy introduced in section 3.3. These stages include addressing the stereotype, using personal narrative to negate the stereotype and then lampooning the stereotype. Jay is addressing the stereotype but does not necessarily offer a personal anecdote to contextualise the stereotype as the personal anecdote is implied (Jay is a lesbian). It can be argued that Jay's sexuality could also be the crux of this entire performance. The third aspect of womedy is to invert the stereotype, which Jay does by highlighting the irony this creates. The irony implies the obvious that she did not enjoy sexual practices with men because she is a lesbian, and then uses the absurdity of saying she found her purpose and place in the woman's vagina. Again, this displaces the stereotype entirely.

Jay appears to be adopting the gender lineage of the male gender, which has historically held more power than the woman. Based on the lineage of the man, men have traditionally received more privilege and more rights than women, which has also been enforced through stereotypes. One could argue that the privilege or advantage often subconsciously bestowed on men (primarily via stereotypes) can be compared to the irony Jay implies; the irony is not discussed but merely implied, similar to how male privilege is implied. The implication allows the audience to assume, and then Jay inverts the stereotype by either confirming or denying this assumption.

In this joke, Jay is providing irony to the audience and then confirms their suspicions by concluding the joke by stating that she has found her place and purpose in the vagina.

Another example is Jay explaining her encounter with her favourite uncle. Jay discusses how every time she goes back to her hometown and her family, a favourite uncle asks if she is still gay. With this observation, Jay creates a sense of irony as the audience knows that she is still gay, and the audience, therefore, concludes the irony by themselves (that Jay would say yes to her uncle's question). However, Jay uses a humorous comeback to enhance the irony now and jokes that she is “back sucking ‘em dicks”. In this joke, the irony has been implied, but Jay chooses to invert the joke further, and it becomes absurd and negates what the audience has subconsciously concluded. Laughter erupts as the joke concludes, which proffers a successful joke with its execution of irony.

Jay also uses aggressive terms when discussing her partner, stereotypically associated with the man. Towards the end of the ten-minute excerpt, Jay effectively separates her partner from her partner's vagina. This indicates Jay’s view of male gender lineage as she appears to objectify a woman and assumes to take on a position of privilege.

CHAPTER 5: Discussion

This chapter analyses and compares the three case studies' data under the following subsections: summary, semiotic analysis, and comparison of the findings. Each section discusses, collates, and compares the data collection findings. Then, I note the limitations and recommendations for further research. I consider the study's implications on the discipline of comedy and the potential outcomes of the survey to aid further academic research and development in this discipline.

5.1 Summary

This section will note and summarise the topics each comedian addresses in their performances and the suggested and analysed stereotypes.

Amy Schumer starts by addressing the topic of *age as a forty-three-year-old woman* and then discusses how the *female body declines with age*; Schumer tells her twenty-seven-year-old audience member how cute she is because everything is still 'up' and gestures to her breasts to suggest that the female physique would *drop* as the woman ages. Also, on ageing, Schumer discusses the need to wear shoes with an orthopaedic insert for functionality and comfort.

Schumer then shifts to the topic of drinking alcohol and subtly but humorously hints at her *alcoholic tendencies* as she discusses blacking out and how the drinks consumed in the morning do not count towards that day's alcohol intake.

Schumer then shifts to *female beauty standards in conjunction with ageing*. Although she advocates for confidence amongst women, especially as women age, Schumer opted for laser treatments as soon as she turned forty (again) and also experimented with fillers and liposuction. In Chapter 3, I discuss that Schumer's agency/intervention encouraged her to undergo these procedures rather than these procedures being encouraged by societal pressures. This suggests a sound sense of self-awareness and confidence because Schumer has formulated that she will follow through with whatever will assist her confidence. Chapter 3 also inferred, through the analysis of Schumer's stand-up routine, that the beauty standards are unobtainable, based on the overwhelming number of cosmetic procedures readily

available, but produce no actual benefits. She extends the observations to include how she gained back weight from having liposuction in record time.

The liposuction reference addresses how Schumer was encouraged to regain her pre-baby body. She says that undergoing liposuction was necessary to regain her pre-baby body. Although Schumer is aware of not regaining her trimmer pre-baby body, she is not concerned as it has been three and a half years since giving birth, and she looks good. This suggests that Schumer is aware of the societal pressures being placed upon her, and despite having unsuccessful liposuction in an attempt at regaining her trimmer physique, Schumer feels content and has chosen to evade the societal pressures she has felt.

Schumer then discusses the *discovery of physical insecurities (a hump and a double chin)* and how strangers tend to point out these insecurities, as well as people in white coats. Chapter 3 deduced that Schumer is also touching on the idea of *vulnerability and insecurity,* arguably perpetuated by the unattainable beauty standards aimed at women, by explaining that a qualified person (doctor) has established a new insecurity in the patient, and this is how Schumer went for a lip filler treatment but ultimately had the filler dissolved. This speaks to how people establish physical flaws in Schumer's appearance, even though she has not seen these flaws. This also comments on the vulnerability of Schumer. She had a medical procedure to correct the flaw. She ultimately decided to undo the procedure, indicating that Schumer felt that the stranger or the doctor was wrong about the flaw that had been established. Perhaps it was her vulnerability that was targeted rather than her physical appearance.

Ali Wong begins her Netflix comedy special by discussing how male comedians benefit more from dating models than female comedians, suggesting that *male comedians are better recognised and acknowledged in comedy*. Wong then addresses how men are hesitant to date women who have money, power, and respect, believing most men have never received oral sex from a woman who has "money, power, and respect and intelligence". Wong *compares male genitalia to corporate, invaluable assets***.** She uses this analogy to suggest that men are scared of their genitalia being taken from them in a hostile takeover (Chapter 3 asserts the metaphor of male genitalia as an invaluable asset) by a woman with power. This suggests that

a corporate company shows profit based on its assets, so the male's genitalia demonstrate or signify profit and power to men.

Wong also posits herself as a woman with money, power, and respect, which speaks to *her unabashed confidence* – she explains that men should feel honoured to have received oral sex from women with stature, asserting that *oral sex with powerful women is a sought-after experience.*

Wong then discusses men's ejaculation, and she is one of the few women of stature who will allow a man to ejaculate on her face simply because it is 'easy', revealing her preferences for *oral sex.* Chapter 3 concludes that this statement also acknowledges the stereotype that women generally do not enjoy sex, in which Wong regains power from the oppressed party. It is implied that women do/should not enjoy sex, but Wong is negating this by simply saying she enjoys it because it is easy, not because it is something that has to be done to satisfy the other partner sexually. Wong extends the stereotype to liken ejaculating on someone to ''stomping on someone's vegetables, saying that Oprah Winfrey would certainly not allow this in her garden. Winfrey is known as a respectable and successful businesswoman, philanthropist and celebrity, and Wong implies that is the opposite. Here, Wong uses a form of self-deprecation to suggest she would allow 'someone to stomp on her vegetables' because she has taken complete control and power of the stereotype that women generally do not enjoy sex.

Wong then discusses how there are many more self-made male millionaires than women, addressing *male power*. Wong continues discussing the *taxing physicality of performing oral sex*, which results in sore muscles and a committed performance to not laughing at the men. At the same time, he ejaculates and also suggests the *comparison (through her stereotypes) that sexually satisfying her partner is synonymous with taking care of the children.* Wong then explores how men want to date 'chill' women, but women do not want to date 'chill' men because the bills do not get paid by having a laid-back personality which touches on a woman's ambition**.**

Sam Jay repeats several topics and introduces the notion of *performing oral sex on a man as a lesbian woman*. She says she would discuss performing oral sex practices with her friends

to *fit in with and be accepted by her friends. Jay discusses how male genitalia tastes salty* and how she *does not excel at performing oral sex on a man.* On the topic of performing oral sex on a man, Jay recalls a time in which she bumped into a *man that she performed oral sex on and describes the shame and embarrassment that filled her* mind when being forced to confront this experience. With this joke, Jay is accepting the stereotype (that women should not be promiscuous and should be ashamed to demonstrate promiscuity) by acknowledging her shame towards performing sexual practices. However, Jay has established an evident and defiant sense of irony that the audience has absorbed. Therefore, Jay generated humour by addressing and accepting the stereotype compared to the other two case studies. Jay's intersectionality enforces the irony and allows her to comply with the stereotype. The irony is that Jay, a gay woman, is complying with a stereotype that (arguably) favours straight men.

Jay says she *struggles when travelling with her wife* and becomes detached towards her. Jay adds that *she is not a chivalrous man* and will not carry her partner's packed suitcases. Jay is addressing the stereotype that one of the women in a homosexual relationship takes on the role of 'the man', and because Jay presents as a masculine woman, she is the one who is often considered the man. However, she does not take on the ideal of 'the chivalrous man'. Again, this suggests that her intersectionality as a gay woman is what makes the irony successful and, subsequently, the joke.

Jay then discusses the persistent family member (her favourite uncle) who constantly enquires about the *longevity of her homosexuality* and whether she is still a lesbian.

Jay illustrates the experience of *bumping into the man she lost her virginity to* and how Jay now looks like this man, essentially stepping into her masculine appearance and *acknowledging the stereotypes of lesbian relationships* (that one woman takes the role of the man). On the topic of losing her virginity, the comedian explains that the man to whom she lost her virginity asked her a question (if Jay having sex with him is what made Jay gay), which *proposed that this male's genitals could be what swayed Jay to homosexuality*. The man who asked the question is alluding to his physicality as a man could be what 'made' Jay gay, implying that men's physicalities have enough power to change a person's sexuality

5.2 Semiotic analysis

The semiotic analysis examines the following ten categories: the word, the tone, facial mime, gestures, movement on stage, makeup, hairstyle, costume, accessories, decor, lighting, music, and sound effects.

Amy Schumer, *Emergency Contact*

In Amy Schumer's performance, *the words* are direct, and she says defensively, "Don't make me like you," in response to her audience cheering. Schumer's words become conversational when she asks an audience member a question. Throughout the performance, Schumer becomes more approachable and conversational as she starts saying to the audience, "You know?" and asks a camera operator to zoom in on her face for the audience. The development of Schumer's words, shifting from confrontational to becoming friendly, could be likened to how relationships or connections are established and are authentic.

Schumer maintains a steady tone throughout her performance, and when performing facial mimes or gestures, this steadiness and vocal cadence are unchanged. Her tonal delivery indicates confidence and a relaxed and slightly detached demeanour. How Schumer delivers the content of her routine is evident in the semiotic indicators of *word* and *tone*. One receives a contained but confident persona who directly addresses her firm opinions and beliefs while establishing a warm and comfortable rapport with her audience.

Schumer's *facial mime* and *gestures* involve her appearing to avoid laser beams in a heist with a poised effort of bent knees and walking side to side, a slow turn to show off her body to the audience, and a clear and robust flat hand-held straight out ahead of her to avoid anyone talking to her. Schumer also turns to the side and travels a pointed index finger from her buttocks to her armpits, and later in her performance, Schumer repeats a similar gesture. She turns to the side, but this time she points at the back of her neck to show the audience her previously mentioned hump. Schumer's gestures are controlled, precise, and direct in what she aims to portray to her audience. Schumer's gestures do not require much exertion and support her rational and collected persona. Schumer's *movement on stage* signifies control of her environment as she remains still and posed throughout her performance.

Schumer's makeup enhances her appearance, as she sports an entirely made-up face and black eyeliner but no bright lipstick. Therefore, focus is drawn to her eyes, which is crucial in stand-up comedy as these reveal attitude and emotion and can function as indicators of when to laugh. Schumer's *costume* is a silky, cerise, two-piece outfit consisting of a collared shirt with cuffs and an asymmetrical pleated skirt ending just above the knee. Schumer pairs the two-piece with white sneakers. The cerise colour of the two-piece suggests a bold, mature femininity. It is contrasted by her hairstyle, a neatly plaited ponytail over one shoulder, and introduces playful or childlike femininity, highlighting comedy's entertainment value and fun.

Schumer's two-piece outfit, consisting of a shirt and a skirt, is sewn from good quality silk that shines beautifully from any direction, and silk suggests wealth, formality and quality. The silk could encourage the audience to view Schumer as notable and eminent, and it attests to her respect for the audience as she has dressed in silk for them. This aims to empower the audience, indicating that Schumer values her audience and so encourages her audience to value her.

Schumer's *accessories* on stage are a bar stool and a bottle of water. The water reinforces her vulnerability. The audience can relate and identify with her despite her being on stage. Her simple staging and single prop or accessory encourage an uncluttered and uncomplicated performer-audience relationship.

However, Schumer's *decor* and *lighting* establish a formal and rather grand environment, with three lavish chandeliers hanging above her – coupled with her silk outfit, the element of wealth is supported – indicating to the audience that she is eminent and notable. Nevertheless, she works against these in her direct delivery to counter this for a mutually warm encounter for the audience and her. Laughing with a comedian is more manageable if all are relaxed and comfortable.

Upbeat *music* plays as Schumer enters the stage, which indicates the show is upbeat and sassy and about to begin – it assists with the build-up to Schumer's first appearance.

Ali Wong, *Don Wong*

Ali Wong's *words* include vulgar and harsh language (harsh or crude enough to deliver shock value), and she is raw and explicit in her dialogue. Because Wong uses such raw and explicit

language, this could signify that she is aware of her audience's demographic (her successful career can support this) and speaks to that demographic. This suggests self-awareness and confidence in her performance because Wong casually but assertively delivers strong, opinionated matters. Wong's words are delivered enthusiastically, and she uses many facial mimes and gestures to support her words. Wong's language continuously varies and fluctuates in pitch and cadence, which is unpredictable and offers a dynamic performance.

Wong's *tone* is animated, loud, and bold, and she delivers her words with a definite accusatory tone, which frequently comes across as cynical. Again, Wong's tone signifies confidence. She questions many stereotypical ideals in a clear, accusatory, or cynical tone when addressing them. Wong proffers these questions and confidently asserts her own opinions on them.

In terms of *facial mime* and *gestures,* Wong uses a high degree of physicality when she performs. She uses more facial mimes and gestures than in the other two case studies, and her gestures often relate to sexual practices.

Wong's facial mime is not sexually explicit, but she shifts her head with every syllable she utters, such as when she says "spec-ta-cu-lar" to emphasise the importance of the word. This is dynamic and compelling. To contextualise the word, Wong discusses how spectacular it is to receive oral sex from a powerful woman and places a great deal of importance on the syllables of 'spectacular'. This also functions as the punchline of the joke. Wong does use her microphone to signify a penis and moves it toward and away from her face imitating performing oral sex on a man. She adds to the comedy by making gagging noises when she moves the microphone faster.

Wong's *movement on stage*, as she routinely walks from stage left to stage right, suggests enthusiasm and an apparent attempt to include the audience.

Wong's *makeup* and *hairstyle* are subtle. She wears subtle makeup, and it is essential to mention that Wong's eyes are covered with spectacles. Wong's hair is plaited neatly into two plaits that fall along each shoulder. Plaits signify a playful and childlike persona, and this is where the intersection with gender performativity is prevalent. Upon discussing Ali Wong's gender performativity in Section 3.6 Part C, I asserted that the plaits prioritise the efficiency

of her performance by preventing her hair from getting into her face. This will be further analysed compared with the other case studies in Section 5.2.3: Gender performativity.

Wong's *costume* again intersects with gender performativity. Wong wears a skin-tight, long-sleeved, red, leopard-printed dress that ends mid-thigh. A skin-tight garment conventionally emphasises the shape of the form (the garment silhouettes the body). However, due to Wong establishing efficiency in her performance, the skin-tight dress could also be efficient, like a cyclist who wears tightly fitted clothing (made from breathable, deeply researched textiles) to avoid wind disruption. Wong may consider a tightly fitted garment low maintenance in terms of her hem flying up. However, Wong's choice of dress over a jumpsuit or a shirt and pants to accommodate her dynamic performance and high level of physicality is controversial and raises questions.

Wong's *decor* is a customary bar stool; she holds a water bottle to show her humanity and ordinariness. The *lighting* has tones of yellow, flooding the stage with warmth. The short snippet of upbeat music welcomes Wong to the stage and welcomes the audience, indicating the show's start.

Sam Jay, *3 in the Morning*

Jay's *words* appear to hold the most information among the three case studies. Jay begins her special by humbly acknowledging her success in performing a Netflix comedy special, instantly creating a connection with the audience. Jay discusses how she is "doing what she set out to do" and expresses gratitude as she explains how 'crazy' it is for her to perform her own Netflix comedy special. By describing this to the audience, Jay is addressing her newness to the comedy field and also suggesting that her fans and support (who created a demand) are what put her on the stage with Netflix. Jay, therefore, generates a feeling of purpose and importance throughout the audience members. This precise moment marks the successful formation of the performer-audience relationship. After establishing this, Jay speaks about her heterosexual experiences of performing oral sex on a man (this occurred before Jay realised she was homosexual. Jay confides intimate sexual experiences, usually taboo and discussed privately, create a safe, intimate space and strengthen the performer-audience relationship as Jay reveals details of her personal life. Another aspect that contributes to the performer-audience relationship is Jay's language, colloquial or slang

words (like ‘aint’), maintained throughout her performance. Jay discusses her heterosexual experiences before she realised she was a lesbian, which creates a foundation for further discussing her homosexual sexuality to establish an entry point. This functions as a tool to facilitate the audience to follow her homosexuality, a perspective to which people may not be exposed.

Jay’s *tone* is soft and composed throughout her performance, with a steady and regular cadence, which projects control of the stage, her performance, and the audience.

Jay’s *facial mimes* and *gestures* are also subtle and controlled, and she does not perform with a high degree of physicality. Her facial mimes include her moving a horizontal microphone towards and away from her face in a sloppy manner to signify performing oral sex on a man and covering her face to indicate embarrassment as she encounters the man to whom she lost her virginity. Jay’s gestures include putting the back of her hand on a leaned-out hip and using a girly voice to discuss how salty male genitalia is. Jay uses this gesture to convey how her heterosexual friends discuss performing oral sex on men.

Jay’s *movement on stage* initiates inclusivity as she repetitively covers the stage from left to right throughout her performance.

Jay’s *makeup* and *hairstyle* do not allow for much analysis; Jay does not wear any visible or deliberate makeup and sports a short buzzcut with even shorter hair on the sides of her head. This would suggest a persona of masculinity.

Jay’s *costume* also supports a masculine persona, as she wears a collared polo shirt, jeans, and bulky white sneakers. The exciting aspect of Jay’s costume is her acknowledgement of her hometown, Boston, as she displays the Boston zip code font and centre across the front of her polo shirt.

Jay’s *accessories* are also interesting. Compared to the other case studies, she wears the most jewellery. Jay wears a chunky gold watch and necklace but dainty earring studs and a delicate gold bracelet.

Jay’s *lighting* is subtle and creates an intimate space for her performance. As Jay enters the stage, jazz *music* accompanies the audience and initiates the show's start. Jazz music also contributes to an intimate atmosphere.

5.3 Comparison of findings

5.3.1 Comparison of the summary findings

Firstly, I will summarise the stereotypes and topics addressed based on the summaries above. I have tabulated the topics for easier reference based on the most discussed issues. The categories are female physicalities (with a negative connotation), sexual experiences, the power of the man, and outliers. After the table, I will conduct a more detailed comparison.

Schumer discusses topics that broadly fall within the physicalities of being a woman. This includes the complicated and closely analysed ageing process among women. Schumer speaks about her ageing in full view of the public being documented online. Schumer touches on the female beauty standards, the targeted vulnerability and insecurity often associated with women, as well as the many cosmetic procedures that are aimed at women but frequently do not result in promising or lasting outcomes, but none-the-less new procedures similar to these, seem to be reinvented in various ways quite often. Schumer also touches on the idea of women's bodies, which implies that women who have given birth are frequently compared to their 'pre-baby body' post-postpartum, which subsequently pressures the women to return to their 'pre-baby body' (and quickly). Schumer addresses her physical insecurities, and the continual revelation of new insecurities, whether she discovers them or someone else points them out for her, such as having a hump and being short-waisted.

Other than the female physicalities that Schumer addresses, she also discusses her drinking habits and nudges towards alcoholic tendencies.

Ali Wong discusses topics that fall heavily within the scope of sexual practice and performance, the power associated with gender and gender inequalities (that often target women). Wong raises the issue that male comedians are recognised and perhaps more idealised than female comedians and that as a successful comedian, her potential partners diminish as opposed to the increase in admirers from which male comedians seem to receive attention. Wong also compares male genitalia to corporate and invaluable assets of a company to illustrate the importance and significance that men attach to their genitalia. Wong explains, with absolute confidence and in no uncertain terms, that she is a powerful woman and that oral sex with someone like her should be an honour. Wong then describes the taxing

physicalities that come with performing oral sex on a man and further likens her sexually satisfying a man to taking care of the children.

Jay discusses topics that fall primarily within sexual experiences; she discusses performing oral sex on a man (before she realised her homosexual sexuality); she describes the saltiness of male genitalia and not excelling in performing oral sex on a man. She discusses the humbling and humiliating encounter with the man to whom she lost her virginity and describes it as haunting. Furthermore, Jay discusses the troubles she has in travelling with her partner. Jay says she is not a chivalrous man and will not help carry her partner's bags.

Sexual experiences	She displays her unabashed confidence; oral sex with powerful women is a sought-after experience (Ali Wong)
	Her oral sex preferences (Ali Wong)
	Taxing physicalities of performing oral sex, comparing (through her stereotypes) that sexually satisfying her partner is synonymous with taking care of the children (Ali Wong)
	Performing oral sex on a man as a lesbian woman (Sam Jay)
	Male genitalia tastes salty (Sam Jay)
	Fails in performing oral sex on a man (Sam Jay)
	Jay discusses the embarrassment of encountering the man to whom she lost her virginity (Sam Jay)
Female physicalities (with a negative connotation)	Ageing as a forty-three-year-old woman (Amy Schumer)
	The female body declines with age (Amy Schumer)
	Female beauty standards in conjunction with ageing (Amy Schumer)
	Getting Ageing (Amy Schumer)
	The discovery of physical insecurities (a hump and a double chin) (Amy Schumer)
	Vulnerability and insecurity (cosmetic procedures) (Amy Schumer)
Power of the man	Male comedians (Ali Wong)
	Compares male genitalia to corporate and valuable assets (Ali Wong)
	Men thinking they have the power to encourage a sexual orientation (Sam Jay)
Outliers	Alcoholic tendencies (Amy Schumer)

	The struggle of travelling with her wife, because Jay says she is not a chivalrous man (Sam Jay)
	The longevity of her homosexuality, as people ask her if she is still gay when they see her (Sam Jay)

In conclusion, the topic that was discussed most is sexual experiences, but it is essential to note that all three case studies address it, only two: Wong and Jay. The second most addressed topic is female physicalities (with a negative connotation), which was only discussed by Schumer but carried the bulk of Schumer's performance. What is interesting here is that all three are women, and all three are American. However, Jay and Wong hold further descriptions, which carry connotations of otherness: Ali is a woman, American, and Asian, and Jay is a woman, American and Black. Wong and Jay address the most addressed topic, while Schumer discusses the second-most addressed topic without overlapping or including the other two case studies.

Only Schumer and Jay fall in this category regarding the outlying topics, with Jay having the most topics within the outlier category

5.3.2 Comparison of the semiotic analysis findings

To effectively contrast the findings of the semiotic analyses, I will offer a tabulated format of only the signifiers from the semiotic analyses to contrast the case studies better.

The word	Amy Schumer's words progress from confrontational to conversational within the first few minutes of her performance, establishing an authentic performer-audience relationship, while antagonistic and conversational words would reflect establishing a customary relationship with someone unfamiliar.
	Ali Wong uses crass language without hesitation, which determines her confidence as a performer and her ability to know the demographic of her audience. Wong asserts opinions without room for error in interpretation. Wong's cadence suggests a dynamic performance that offers surprise and unanticipated performance.
	Jay's word is the most complex of the three case studies. Jay uses conversational language to address the newness of her career upon entering the stage. This humbles Jay in the eyes of the audience but also provides the audience with a sense of purpose in suggesting that her audience helped Jay get to where she is. This establishes a well-grounded performer-audience relationship. Jay also uses slang and colloquial language, further initiating the performer-audience relationship by demonstrating authenticity.

In all three case studies, the word establishes the performer-audience relationship in three ways. Schumer uses her language to associate her entrance onto the stage with starting a connection or conversation with a stranger (audience). Schumer starts to speak more conversationally, prompting her audience and asking questions, suggesting a successful interaction with a stranger who has now become an acquaintance. Through this, Schumer's audience starts feeling like peers and equals through her use of friendly language.

Wong uses quite the opposite approach. It is as if Wong needs to establish a performer-audience relationship because she is well acquainted with her audience demographic. As Wong enters, her language jumps instantly into conversation, which suggests Wong feels an introduction is not necessary. This could also initiate authenticity because it is as if Wong is picking up on a conversation with a good friend she has not seen in a long time. This creates comfort and ease amongst the audience.

Jay's word is the most complex of the three, which could be because Jay is the most recent of the three case studies to enter the comedy space. Jay enters the stage, addresses her newness to comedy, which reflects her modesty, and establishes rapport with her audience. Her audience feels credible in assisting Jay in her success by supporting her. Jay further uses colloquial language, which speaks to authenticity.

Tone	Schumer's tone is calm and collected, and she maintains a relaxed demeanour throughout the performance. Schumer uses accusatory undertones as she questions the physicality of the female form.
	Wong's tone is assertive and definitive in pronouncing words, proffering opinions, and making crude, detailed analogies. Wong, like Schumer, also adopts an accusatory tone and even conveys cynicism in how she aggressively and very physically addresses her topics.
	Jay's tone is controlled, light, and soft, but is clear and assertive in what she addresses. Jay's light tones allow a calming and intimate atmosphere. She establishes confidence and control through her tone, which offers precise direction and room for interpretation.

In terms of tone, both Schumer and Ali Wong take a similar approach in their accusatory undertones. However, Wong is more aggressive than Schumer. It is almost as if Schumer has come to terms with the high standards expected of women in the way that Schumer adopts accusatory tones but does not appear to question them. She addresses the topics and

contextualises them. However, Wong's accusatory tone offers direct questioning, which Wong herself assertively answers. In answering, she presents a gloomy and cynical attitude.

Jay takes an approach contrary to Schumer and Wong; Jay's tone is soft and approachable. Jay's jokes offer room for interpretation (arguably due to her intersectionality), which creates an intimate and safe space for her audience.

Tone plays a significant role in how case studies examine gender. I discuss the tone in further detail when I compare the case studies' gender performativity.

For the following section, I will combine the *facial mime* and *gestures* into one, as they both speak to the performer's physicality and would appear inferior or redundant if one were to separate the two.

Facial mime and the gesture	Schumer's facial mimes and gestures are controlled and do not display a high degree of physicality.
	Ali Wong displays the most physicality and a high degree of that. Wong is agile in her performance. As Wong's physicality increases, her cadence fastens, aligning with a joke's climax or conclusion.
	Sam Jay performs very few facial mimes and gestures. The most common gesture is Jay putting her hand in and out of her pocket throughout her performance.

The three case studies differ in this category. Ali Wong performs the highest degree of physicality, which could speak to the cynicism she presents through her tone. I think her overt physicality in her performance conveys her restlessness about 'female expectations' (which she discusses broadly throughout her performance).

Schumer is controlled in her physicality, which could speak to her tone and how Schumer discusses oppression but does question the oppression. Instead, she uses the oppression for comedy.

Jay is also controlled in her facial mimes and gestures but performs significantly fewer facial mimes and gestures than Schumer and Wong. Instead, Jay puts his hands in her pockets now and then and conveys a calm and collected atmosphere. Based on this analysis of the facial mimes and gestures, it is safe to assume that the performer's physicality is largely intertwined or dependent on the performer's tone..

Movement on stage	For movement on stage, all three case studies display similar movements and feelings, so it is unnecessary to tabulate them individually. All three case studies often walk from stage left to stage right throughout their performance, contributing to inclusivity and nurturing the audience-performer relationship.

This section discusses *makeup* and *hairstyle* working together to present the face.

Makeup and hairstyle	Schumer's makeup focuses on the eyes, which initiates bonding as she draws attention to her eyes (and wears no heavy lipstick). Schumer wears a plait over one shoulder that is carefully positioned as it does not move throughout the performance. The plait frames the face but only rests on one shoulder, suggesting a child-like persona.
	Wong wears natural makeup and large spectacles. Wong has plaited hair in two plaits – as worn by young girls. Wong wears her hair plaited for efficiency so that it does not get in her face when she performs physically.
	Sam Jay wears no makeup (or visible none) and adds to projecting an unpretentious and authentic persona. Jay has a short buzzcut to explain this -, with shorter hair on the sides of her head, reinforcing the no makeup look and possibly a masculine persona.

Interestingly, both Schumer and Wong chose to wear plaits. Schumer's plait is assembled precisely but messily and does not move throughout her performance. While Wong's plaits are tightly plaited, they move frequently throughout her performance.

Schumer's dark eyeliner suggests maturity, while the plait offers femininity. The plait suggests a childlike persona, but the eyeliner contradicts this. One could assume Schumer uses the plait to impart a sense of fun associated with childhood and comedy. In comparison, Schumer's makeup and hairstyle contribute to her persona on stage and what she signifies to the audience. Her efficiency on the stage determined Ali Wong's hair and makeup, ultimately prioritising her performance. Yes, it is naive to assume that Wong is not concerned about how she signifies herself, and I believe this is unpacked in the following category

Costume	Amy Schumer's costume uses colour to signify mature femininity; it uses fabric to represent the importance of both the performer and the significance of the performance (because it is expensive) and is paired with white Vans (sneakers).
	Ali Wong's costume hugs her body tightly and enhances her form. She pairs the dress with white sneakers.
	Sam Jay's top pays homage to her hometown and further supports a masculine persona.

Jay's *costume* aims to pay homage to her hometown and differs significantly from the other case studies.

Noteworthily, Schumer and Wong wear white flats. Schumer discusses the need for orthopaedic inserts, suggesting that her flats are for comfort. Wong wears white flats to support her physicality on stage. Could these two comedians have the same motives for wearing flats? Wearing comfortable shoes to support physicality? Schumer wears white Vans (sneakers), intended for skateboarding due to their excellent grip on the floor, while Wong wears white sneakers, which signifies activity. Schumer's costume contributes to an identity: a mature woman prioritising comfort. Wong's costume accommodates her physicality for the most part. However, as previously mentioned, it would be naive to think Wong does not consider her appearance and what it signifies during a performance. In section 3.7, Wong's semiotic analysis, I noted that Wong wears a short, skin-tight dress that is not conducive to performance high in physicality, which poses the question, 'Why?' I think it may be that due to the dress being skintight, which frames the body, it could simply be Wong adding her spin on femininity.

The *accessories* and *decor* are complex as all three comedians do not utilise many accessories or detailed décor. It can be noted here that Jay wears accessories and the most jewellery of the three case studies (she wears a chunky necklace and watch, with dainty earring studs and a bracelet). Regarding accessories and decor, the bar stool and water bottle present on Schumer and Wong's stage signify humanity, as the performers also need water. However, is it an accessory because the performers do not drink from the water? This leads me to believe it can be considered decor rather than an accessory, which suggests the idea of humanity but does not execute it. Jay does not have a bar stool and water bottle on her stage, which could speak to her newness in the stand-up comedy space. However, because this show is her second Netflix comedy special, it is possible to assume that this embraces Jay's authenticity, as she goes against the customary bar stool and a water bottle because she will not drink from it.

The *lighting* in Schumer and Wong's performances is very similar. Schumer has chandeliers that create a majestic but still warm environment. Wong's lighting is yellow, which creates a warm atmosphere. Jay's lighting is smaller and direct, creating a more intimate environment.

Lastly, in terms of *music*, all three case studies use music to announce their entrance to the stage and initiate the show's start.

5.3.3 Comparison of gender performativity findings

Based on the discussion of the findings of gender performativity within these three case studies, two significant factors emerge: first, the superficial way the performer communicates their gender, and second, the perspective of the influence and impact of gender lineage on the performer. The lineage of gender becomes particularly important in comedy and stand-up comedy because of the stereotypes historically and consistently attached to gender.

Regarding superficially performing gender, both Schumer and Wong play into the feminine appearance. However, they use their appearance to endorse their femininity further. Schumer signifies a mature femininity prioritising comfort, while Wong signifies a slight sexual femininity (her tight clothing) that prioritises efficiency. Jay represents a masculine persona and sports much jewellery.

For clarity, I refer to the practice of the lineage of one's gender influencing their perspective, simply as the gender lineage perspective. In terms of the gender lineage perspective, again, both Schumer and Wong present similarly, with Jay as the outlier. Schumer and Wong both use accusatory undertones, with the latter embracing cynical and sad themes. Due to the accusatory tones, one can assume that Schumer and Wong are performing the gender lineage perspective in their tone, and they perform femininity.

Schumer and Wong's accusatory tones follow through to their content as we recall the findings in the summary section. Schumer mainly discusses the physicalities in a derogatory way, while Wong discusses men not wanting to date powerful women and comparing men's genitalia to corporate assets. It appears that Jay's gender lineage perspective can be more complex than that of Schumer and Wong. Jay does not take on an accusatory tone but often positions herself with the man when addressing oppressed female stereotypes.

I believe Jay's position is a limitation. One can assume that Jay is performing masculinity in a naturalised state as she signifies a masculine persona, but that would be premature. Due to Jay's intersectionality, many things become uncertain. One could argue that she is performing femininity in a naturalised state because she is a masculine-presenting lesbian, but she

identifies as female. Perhaps within intersectionality, there are further gender lineage perspectives to be explored, as well as how the gender lineage perspective of women and men could intersect.

5.4 Limitations

The most significant limitation is the need for more literature to assist a person in analysing comedy. There is some literature on stand-up comedy and its characteristics. However, not much research has been conducted on the social impact of comedy and its purpose, nor have there been frameworks in which to study comedy and stand-up comedy further.

Stand-up comedy, in particular, is a large subject to tackle due to its complexities and facets. Comedy can be analysed in terms of movement, content, type of humour used, social impacts of comedy, and social information provided by comedy, among others.

5.5 Future research recommendations

Due to the many exciting findings throughout this analysis, it has become clear to me that I have only scratched the surface. Many avenues can be further explored. One can analyse the type of humour each performer adopts regarding the performer's cadence and physicalities. One can consider the progression of the comedy form from the start to the end of a single performance. For example, further into their set, many comedians increasingly become more vulgar, focus on physicality, and address content that becomes more absurd throughout their performance.

There are various frameworks through which one can view comedy. Such a significant topic could be dissected further, and my womedy analysis framework could be applied to South African stand-up comedy. This route will be more accessible soon based on the timely introduction of South African comedy specials introduced on Netflix and the increased available resources, such as snippets on Instagram and TikTok.

One can consider the progression of stand-up comedy (in terms of costume, gender, and content) throughout the past three decades—for example, Joan Rivers' progression from her early stand-up performances to her last performances. One could analyse historical stand-up comedy performers compared to today's stand-up comedy performers.

Another significant aspect growing exponentially in stand-up comedy is identity. One can investigate how transgender and non-binary stand-up comedy performers explore comedy.

5.6 Practical implications of the findings

This study aims to amplify the importance of comedy in our society today. Stand-up comedy is a vessel that creates awareness and informs society in an effective and relatable way. Living in a post-COVID pandemic world and having knowledge and experience of isolation, one hopes for connections and relatability to rekindle community and repair loneliness.

5.7 Main outcomes from findings

In terms of the semiotic analysis, the most compelling aspect is how important the tone of the performance case studies is, especially in determining the performer-audience relationship. All three women use the tone independently, and all use tone to establish an authentic performer-audience relationship.

All three women use stereotypes to address their respective topics. However, Schumer and Wong address stereotypes, use personal narratives to contextualise the stereotype, and then lampoon the stereotype. While Jay similarly addresses stereotypes, she uses personal narrative to contextualise the stereotype and often uses her intersectionality to create irony as she complies with the stereotypes that generally favour men. These three women all use stereotypes in complex and compelling ways to reshape the perspective of stereotypes. As a viewer, one does not realise the complexities that these stereotypes provoke through the way these women have addressed them.

In terms of gender performativity, the significant outcome of gender lineage performance becomes apparent. In this case, Schumer and Wong also portray gender lineage performance similarly in the distasteful and pessimistic way they address the stereotypes that favour men. However, Jay displays contrast, and it is essential to note that due to Jay's intersectionality, her gender lineage performance is complex, and further academic research is needed to analyse it further. Nonetheless, I proffer assertions based on my research but acknowledge further research is needed to substantiate these assertions.

In terms of stereotypes, Jay adopts the stereotypes in an opposing way to the other subjects. Jay specifically adopts the stereotypes that oppress women. Jay places the position of favour or privilege using the lens of men. She uses the assumption that these stereotypes are met successfully by her audience based on their laugh response, which indicates a successful joke. In other words, Jay is not a man; rather, she adopts a masculine persona or ensemble. In a relatable way, Jay adopts the male privilege lens of the stereotypes that oppress women, which proffers an interesting perspective of the strength of stereotypes. It appears that stereotypes may be fickle enough to persevere based on appearance alone rather than based on the sex of the performer.

Additionally, gender lineage performance research suggests that adopting the male lineage provides an essence of privilege regardless of the sex of the subject. Jay almost effortlessly adopts the male lineage simply by presenting masculinely and can switch to adopt the privileged position of the stereotypes that oppress women.

In terms of the basis of gender performativity, Schumer and Wong both use feminine appearances to deconstruct the idea of femininity. Schumer appears in a cerise shirt and wears a knee-length skirt. Wong wears tightly fitted dresses, and both women have plaited hair. The semiotic analysis, in conjunction with the application of gender performativity theory, is that both women establish a feminine persona, which is created from the onset as this is the first glimpse that the audience gets of the performer. Then, throughout the performance, both women discuss multiple issues about physical shortcomings, sexual activities, and social pressures. Through performance, they deconstruct the feminine persona they portray at the start of the performance.

CHAPTER 6: Conclusion

This study aimed to determine how comedians confront and perform gender within dress and costume by completing a semiotic analysis and applying gender performativity theory to three case studies. The intention is to determine how female stand-up comedians tackle their gender throughout their routines and to discover the similarities and differences between these case studies.

The case studies determined the function, process, and practices of stand-up comedy and the imperative purposes that comedy serves, such as creating awareness and developing bonds. The case studies also looked at how stand-up comedy is performed in the marginalised sectors and how differently comedy and its jokes are performed.

Dress, costume, and clothing are significant in determining the presentation of oneself and how a person is positioned in society. The costume/clothing is linked to comedy through gender, which is evident through the outcome of the semiotic analysis in conjunction with gender performativity theory.

The semiotic analysis allowed a greater understanding of how these performers present themselves, from their tone of voice to their costumes. The analysis also encouraged a broader perspective of how each case study determines how they are to be seen by their audience. The semiotic analysis makes it clear that there is intention in making decisions that may seem mundane, such as using a person's tone to establish an authentic performer-audience relationship, which will ultimately align with the success of the comedy.

Gender performativity theory is valuable to this study and can be explored in excellent detail, which I believe would greatly serve to further this research.

It is clear and safe to assume that the complexities of comedy offer many challenges. However, how the study approached and organised the comedy topic allowed the outcome to be presented clearly and generated many significant findings.

BIBLIOGRAPHY

BARTHES, R. (1990). *The Fashion System*. California: University of California Press.

BISCETTI, S., & BAICCHI, A. (2022). *The Language of Fashion*. New York: Peter Lang AG International Academic Publishers.

BRODIE, I. (2008). Ethnologies. *Stand-up Comedy as a Genre of Intimacy*, *30*(2), 153-180.

BUTLER, J. (1988). Performative acts and gender constitution, an essay. *Phenomenology and Feminist Theory*, *40*(4), 519-531

CALISKAN, D., Subasi, N., & Sarisen, O. (2006). American Studies International: *Is There Such Thing as Women's Humor? 127*(2), 244-251. DOI; 10.1016/j.ejogrb.2005.11.024.

CHAPELLE, D. (2017). *The Bird Revelation*. Film Documentary (Stand-Up Comedy). Directed by Stan Lathan. United States of America, Netflix.

CHAPELLE, D. (2019). *Sticks and Stones*. Film Documentary (Stand-Up Comedy). Directed by Stan Lathan. United States of America, Netflix.

CHIARO, D. (2018). *The Language of Jokes in the Digital Age.* Routledge: New York

DOUKA, A. (2018). Dior/what would you do for Love? Medium.com. Accessed: https://medium.com/ad-discovery-and-creativity-lab/dior-what-would-you-do-for-love-4f716ca856d3.

DUBE, M. (2009). Laughter in Revolt- Race, Ethnicity, and Identity in the Construction of Stand-up Comedy. Ph.D. thesis. (Philosophy in Drama and Humanities). America: Stanford University.

EICHER, J. B., & ROACH, M. E. H. (1992). *Definition and Classification of Dress*: *Implications for analysis of gender roles*. Oxford: Berg Publishers.

ENTWISLE, J. (2015). *The Fashioned Body: Fashion, Dress and Social Theory*. New Jersey: John Wiley & Sons.

FASHIONGONEROGUE.COM. (2014). Doutzen Kroes goes naked in the reveal for men Calvin Klein fragrance advert. FashionGoneRogue.com. Accessed: https://www.fashiongonerogue.com/doutzen-kroes-goes-naked-reveal-men-calvin-klein-fragrance-ad/.

GERVAIS, R. (2022). *Supernature*. Film Documentary (Stand-Up Comedy). Directed by John L. Spencer. United States of America, Netflix.

GILBERT, J. R. (2004). *Performing Marginality: Humor, Gender, and Cultural Critique*. Michigan: Wayne State University Press.

GOFFMAN, E. (1990). *The Presentation of Self in Everyday Life*. Scotland, Doubleday.

GRĂDINARU, I (2012). The Ways of the Trickster: Meaning, Discourse and Cultural Blasphemy. Semantic Scholar.

GRANT, U. S. (1998). *The Reasons of the Code. Reading Eco's "A Theory of Semiotics”.* New York, Routledge.

GREENBAUM, A. (2015). *Metonymy of Peace: The Comic Book Peace Project*. (pp. 40-55). London: Palgrave Pivot DOI: 10.1057/9781137550774_5.

HADDISH, T. (2015). *My Body is like an Expensive House*. Film Documentary (Stand-Up Comedy, YouTube).

HANDLER, C. (2022). *Revolution.* Film Documentary (Stand-Up Comedy). Directed by Jo Koy. United States of America, Netflix.

HARMS, N. 2012. Gender Performativity in South African Films with Reference to Leon Schuster's Comedies (1993 – 2012). MA Thesis (Culture and Media Studies). Pretoria: University of Pretoria.

HE, L. (2017). *The construction of gender:* Judith Butler and gender performativity. Dordrecht: Atlantis Press. DOI: 10.2991/iccessh-17.2017.166.

HITCHENS, C (2007). Why Women Aren’t Funny. *Vanity Fair.* Accessed: https://www.vanityfair.com/culture/2007/01/hitchens200701

JHALLY, S. (2007). *The Codes of Gender.* Film Documentary (Kanopy). Directed by Sut Jhally.

KAWALEC, A. (2020). Stand-up Comedy as a Hallmark of Western Culture. *Journal of Aesthetics & Culture, 12*(1), 1788753. DOI: 10.1080/20004214.2020.1788753.

KOTTHOF, H. 2006. Gender and Humour: The State of the Art. *Journal of Pragmatics 38*(1), pp. 4-25.

KOWZAN, T. (1968). Philpapers: The Sign in the Theatre, pp. 52-80. DOI:

10.1177/039219216801606104

KWAKYE-OPINGK, R., & ADINKU, G. U. (2013). *Arts and Design Studies:*Costume as Medium for Cultural Expression in Stage Performance, Laughing all the Way to the Bank, 8(1), 9-18.

LETTERMAN, D. (2018). *My Next Guest Needs No Introduction*. Television series (Netflix). Directed by M. Bonfiglio, M. A. Ritchie and M. Steed.

LUCKERSON, V (2017). *The Ringer:* Laughing all the Way to the Bank. Online article.Accessed: https://www.theringer.com/authors/victor-luckerson/archives/14. Accessed 7 July 2023.

MADDISON, T, *Popsugar: If You’re in Need of a Laugh, These are the 30 Best Comedy Specials on Netflix Right Now.* Online Image. Accessed: https://www.popsugar.com/entertainment/best-stand-up-comedy-on-netflix-48622607 Accessed: 30 October 2023

MINTZ, E. 1985. Comedy as Social and Cultural Mediation. *American Humour, 37*(1), Spring: 71-80.

PRESCOD, C. (2022). Paste: *Ali Wong Embraces Unrelatability.* Online Image. Accessed: https://www.pastemagazine.com/comedy/ali-wong-don-wong-review. Accessed: 27 October 2023

PROULX, M. (2018). Comedy Studies. *Shameless Comedy: Investigating Shame as an Exposure Effect of Contemporary Sexist and Feminist Rape Jokes. Comedy Studies,* 9(2), 183-199. DOI: 10.1080/2040610X.2018.1494361

RAPF, J. E. (1993). Comic Theory from a Feminist Persepective: A look at Jerry Lewis. *Journal of Popular Culture* 27(1), Summer: 191-203.

RYAN, S, Ryan, D. (2022). The Academy: Semiotics. Accessed: Accessed: 9 July 2023 E. https://resource.acu.edu.au/siryan/Academy/author%20pages/author%20main%20page.htm.

SANG, J., & PARK, M. (2009). A Study on the Use of Underwear as Outerwear. *International Journal of Costume Culture, 12*(1), 1-12.

SCHUMER, A. (2019). *Growing*. Film Documentary (Stand-Up Comedy). Directed by Amy Schumer. United States of America, Netflix.

SCHUMER, A. (2023). *Emergency Contact.* Film Documentary (Stand-Up Comedy). Directed by Amy Schumer. United States of America, Netflix.

SCORZIELLO, S. (2023*). Amy Schumer: Emergency Contact sets June Premiere on Netflix*. Online Image. Accessed: https://variety.com/2023/tv/news/amy-schumer-emergency-contact-premiere-netflix-1235615525/. Accessed 9 July 2023.

SCOTT, B (2018). Tina Fey insists Diversity is Better for TV Writing Rooms. BuzzFeed.com. Online Article. Accessed: https://www.buzzfeed.com/scottybryan/tina-fey-clapback-equality-writers-rooms

SHIELDS, S. A. (2008). *Gender: An Intersectionality Perspective*. New York: Springer Science and Business Media. DOI: 10.1007/s11199-008-9501-8

SHLESINGER, E. (2022). *Hot Forever.* Film Documentary (Stand-Up Comedy). Directed by Steve Paley. United States of America, Netflix.

SQUIRE, G. (1974). *The Eye of the Beholder. Dress, Art and Society*. London: Studio Vista.

STURGES, P. (2010). *Comedy as Freedom of Expression*. Leeds: Emerald. DOI: 10.1108/00220411011023661.

TOMLINSON, T. (2022). *Look at You.* Film Documentary (Stand-Up Comedy). Directed by Kristian Mercado. United States of America, Netflix.

TOMSETT, E. (2018). Positives and Negatives: Reclaiming the Female Body and Self-Deprecation in Stand-Up Comedy. *Comedy Studies, 9*(1), 6-18. DOI: 10.1080/2040610X.2018.1437167.

UMBERTO, E. (1977). The Drama Review: *Semiotics of Theatrical Performance, 21*(1), 107-117. DOI: https://doi.org/10.2307/1145112

WGSN Original CADs/Flats (2024). Knit and Jersey Tops. Accessed: https://www.wgsn.com/library/results/0/collar.

WHITE, P. (2017). *Film Quarterly,* Bodies that matter*, 70*(3), 23-31. DOI: 10.1525/FQ.2017.70.3.23.

WONG, A. (2018). *Hard Knock Life*. Film Documentary (Stand-Up Comedy). Directed by Jay Karas. United States of America, Netflix.

WONG, A. (2020). *Don Wong,*. Film Documentary. (Stand-Up Comedy). Directed by Nahnathka Khan. United States of America, Netflix.

WORLDWIDE PANTS (2018). Tina Fey Insists Diversity is Better for TV Writing Room BuzzFeed.com. (Online Image).

APPENDICES

Kindly click on the link attached to each heading to review the appendix. Below is an image that reflects the google drive that will appear after clicking on the links.

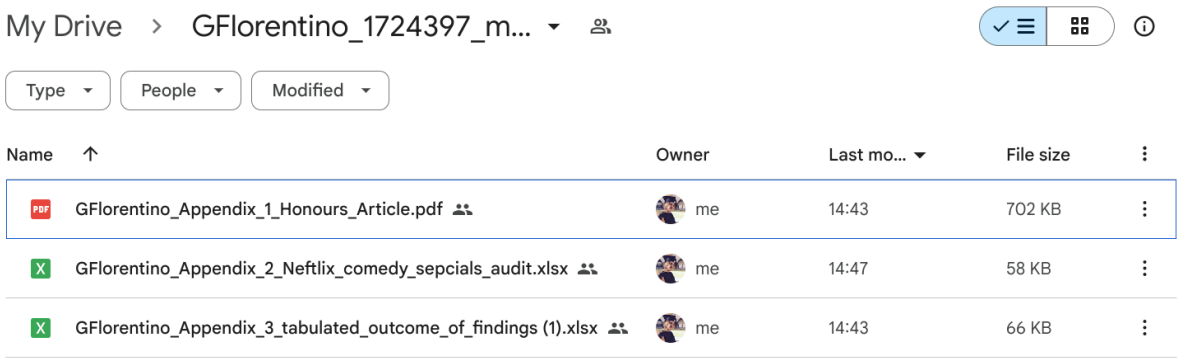

Google Drive Folder: GFlorentino_1724397_masters2024_appendices_folder

APPENDIX 1: Honours article

https://drive.google.com/file/d/1vNoS0XRRD1Lf-30qAPTRR6CciQEK2V6S/view?usp=drive_link

APPENDIX 2: Netflix comedy specials

https://docs.google.com/spreadsheets/d/1E52L0BQnQcy6uKFbjyuBg2Dcr11yUD2_/edit?usp=drive_link&ouid=103046317766000758898&rtpof=true&sd=true

APPENDIX 3: Tabulated outcome of findings

https://docs.google.com/spreadsheets/d/1H9QGDT6HZ1D8scIkuQbnVmdTa_h1U4_P/edit?usp=drive_link&ouid=103046317766000758898&rtpof=true&sd=true