

https://dspace.org/

Edulan : a local area network for an educational environment

De Souza, Eduardo Albino

2015-03-05
http://hdl.handle.net/10539/17154

Downloaded from a DSpace repository. https://dspace.org/

EDULAN : A LOCAL AREA NETWORK FOR AN EDUCATIONAL ENVIRONMENT

Eduardo Albino De Souza

A dissertation submitted to the Faculty of Engineering, University of the Witwatersrand, Johannesburg, in fulfilment of the requirements for the degree of Master of Science in Engineering.

DECLARATION

I declare that this dissertation is my own, unaided work. It is being submitted for the Degree of Master of Science in the University of the Witwatersrand, Johannesburg. It has not been submitted before for any degree or examination in any other University.

E. A. DE SOUZA

On this the 16'th day of Marc

ABSTRACT

The needs and requirements of a typical Personal Computer (P.C.) network in an educational environment are discussed. A proposed system with a 'star-bus' topology with a file-server at the hub is described. Each ray of the star is a RS 422 twisted pair bus onto which a number of personal computers are attached. Access to the bus is by means of the CSMA CA (Carrier Sense Multiple Access with Collision Avoidance)access method. The busses operate at bit rates of between 1 and 1.5 Mbits per second. The interface to the Personal Computer is by means of a floppy disk drive emulator. The principles of operation of the floppy disk drive system in a Personal Computer are described as well as the design and implementation and testing of the disk drive emulator. Development of a device driver to create a number of logical drives on each Personal Computer with associated drives on the file-server is described.

ACKNOWLEDGEMENTS

I wish to express my thanks to:

- Mr. G. T. Gray who supervised my project, for his support and help, for the discussions we have had, and for the great autonomy I have had in my work.

- Professor H. E. Hanrahan for his assistance and the discussions we had.

- The Council for Scientific and Industrial Research for their financial assistance by way of a bursary during my period of research.

- Mr. S. Marantos whose assistance in a number of aspects is greatly appreciated.

- Mr. R. A. Schutz for his research into automated marking techniques for novice Pascal programmers which is to be implemented on the file-server.

- Mr. M. W. Hildyard For his research into the high level software for the file-server.

- I am also grateful to those laboratory technicians, who by their valuable advice, have helped me in this project.

TABLE OF CONTENTS

1.0 INTRODUCTION 1

2.0 NETWORKS IN AN EDUCATIONAL ENVIRONMENT: ARE THEY NECESSARY? 2

3.0 NETWORKS FOR EDUCATIONAL ENVIRONMENTS: WHY ARE THEY DIFFERENT? 4

4.0 NETWORK REQUIREMENTS 6

5.0 SYSTEM OVERVIEW 7

5.1 Use of one P.C. with the floppy disk drive emulator connected to the file-server. Only one floppy disk is emulated. 10

5.2 Emulation of 25 floppy disk drives using the hardware configuration in (5.1). 12

5.3 The operation of the menu program and software protection on the system described in (5.2) above. 13

5.4 A number of P.C.'s operating as in (5.3) above. 15

6.0 THE FLOPPY DISK DRIVE EMULATOR 16

6.1 The Floppy Disk Drive Emulator (Hardware) 19

6.2 The Floppy Disk Drive Emulator (Software) 23

7.0 REQUIREMENTS OF THE FILE-SERVER 28

8.0 CONCLUSION 30

APPENDIX A THE STRUCTURE OF FLOPPY DISKS 33

APPENDIX B THE FLOPPY DISK DRIVE INTERFACE 38

APPENDIX C THE FLOPPY DISK CONTROLLER 41

APPENDIX D DATA RECORDING TECHNIQUES 43

APPENDIX E THE DECODER CIRCUITRY 47

APPENDIX F THE ENCODER CIRCUITRY 60

APPENDIX G THE INTERFACE BOARD 68

APPENDIX H THE MICROPROCESSOR CONTROLLER UNIT 70

APPENDIX I THE TRACK CACHE 81

APPENDIX J WHY 'STAR-BUS' NOT ETHERNET 89

APPENDIX K THE CSMA CA ACCESS PROTOCOL 91

APPENDIX L MESSAGE PASSING ON TRACK 40 96

APPENDIX M THE MS-DOS DEVICE DRIVER 99

APPENDIX N THE ENVISAGED FILE SERVER HARDWARE 119

APPENDIX O EMULATION SOFTWARE 121

APPENDIX P THE TRACK EMULATION SOFTWARE 143

APPENDIX Q TESTING THE FLOPPY DISK DRIVE EMULATOR . 157

LIST OF REFERENCES 166

BIBLIOGRAPHY 168

LIST OF FIGURES

Figure		Page
5.1	Schematic Diagram Of The 'Star-bus' Network Topology	7
5.2	Schematic Diagram Of The Configuration For The Emulation Of a Single Floppy Disk	10
5.3	Schematic Diagram Of The Configuration For The Emulation Of 25 Floppy Disks	12
5.4	Logical Association And Physical Mapping Of The Disk Drives On The P.C. And The File-server	12
6.1	Components Comprising The Floppy Disk System In The P.C.	17
6.2	Flow Of Data In And Out Of The Emulator	21
6.3	Schematic Diagram Of The Emulator Track Counter	22
6.4	Flow-chart Of The Emulator Software	25
A.1	Subdivision Of The Disk Surface Into A Number Of Tracks	33
A.2	Diagram Of The IBM System 34 Double Density Track Format	35
A.3	Composition Of A Sector	37
D.1	Diagram Illustrating FM And MFM Encoding	44
D.2	Encoding Of The Address And I D Address Markers	45
E.1	The Decoder Circuit Diagram	48
E.2	Timing Diagram Of The Counter Reset Circuit	50
E.3	Timing Diagram Of Write Data At The Start Of A Write Operation	51

E.4 Timing Diagram Of Clock Pulses Showing Expanded Pulses And Added Clock Pulses 54

F.1 Bit Cell Structure - Pulses May Occur During The First And Third Microsecond 61
F.2 Encoding Of The Address And I.D. Address Markers . 62
F.3 Counter Output Waveforms 64
F.4 The Encoder Circuit Diagram 67

G.1 The Interface Circuit Diagram 69

H.1 Block Diagram Of The Floppy Disk Drive Emulator .. 71
H.2 The 80188 CPU Circuit Diagram 72
H.3 The Memory Circuit Diagram 73
H.4 The Memory Map Of The 80188 76
H.5 Timing Diagram Of The RAS, CAS And WE signals 77
H.6 The I/O Circuit Diagram 79
H.7 The I/O Map 80

I.1 Cache Implementation With Each Data Segment Preceded By A Header 81
I.2 Separate Index And Data Areas For The Cache 82
I.3 Diagrammatic Represention Of The Track Cache Data Structure ..... 8.

K.1 Timing Of A CSMA CA Network Dialogue 93
K.2 CSMA CA Frame Format 95

P.1 Diagram Of The IBM System 34 Double Density Track Format 144
P.2 Bit Functions Of Write Register 5 Of The Z8530 ... 149

1.0 INTRODUCTION

I.B.M.'s launch of its Personal Computer (P.C.) in 1981 and the subsequent flood of P.C. clones on the market has accelerated the use of computers in a number of fields and education is no exception. A number of networks have been designed for these P.C.'s for commercial use but the design of networks for use in educational environments presents certain design challenges that are rarely encountered in other environments.

In this dissertation the necessity of a network system in an educational environment is discussed as well as the aspects that make these networks different to others. A 'star-bus' topology is proposed with a file-server at the hub. Access to each of the rays of the star which consist of an RS422 twisted pair operating at speeds between 1 and 1.5 Mbits per second is by means of the CSMA CA access method. A novel approach has been adopted whereby the interface between the P.C. and the network is by means of the floppy disk drive system of the machine. This hardware approach along with a small amount of software makes the network appear to the P.C. as a number of disk drives. A degree of software protection is included to reduce the possibility of software on the file-server being copied.

The design, implementation and testing of the P.C. interface comprised the major portion of the research and hence forms the major part of the dissertation. Aspects such as network media access, requirements of the file-server and software protection are also discussed.

Due to the extremely technical nature of most of the descriptions, a large number of these descriptions have been placed in the appendices to make the main body of the report easier to read. The P.C.'s referred to in a number of places in the report refer to the I.B.M. and compatible Personal Computers. These machines operate primarily on the PC-DOS and MS-DOS operating systems.

2.0 NETWORKS IN AN EDUCATIONAL ENVIRONMENT: ARE THEY NECESSARY?

To answer the question 'Are networks necessary in an educational environment ' consider a set of comp ters used in an educational laboratory, and the advantages which will be provided by adding a network.

A Personal Computer (P.C.) laboratory is equipped with between 25 and 40 computers. Each of these computers has two floppy-disks and no hard-disk. This laboratory may be required to serve more than 100 students in total. During this computer course the students are required to do certain laboratory exercises, prepare assignments and write tests. One may initially think that it is a simple task to provide each of the computers with a 'Master Disk' which has the required Disk Operating System (DOS) along with the necessary laboratory exercises or assignment. If we stop to consider the time required to prepare these master disks we soon realise that the preparation of 40 such disks is a tedious task. We must be realistic since as experience has shown, it is rare that these exercises are fault free. As the exercise is carried out, invariably errors are found that have to be corrected. We are now confronted again with the master disk preparation task.

It would be far more efficient for one master disk to be corrected and be available immediately to the students. This would certainly be possible if these masters were kept on a central file server to which all the students had access via each P.C. The network would thus be required to provide the interconnection between the file server and each individual P.C..

Another aspect mentioned above viz. the writing of tests would benefit by the use of a network. Considering the number of students mentioned above we must examine the effort required by the examiners in such an

exercise. In most cases each student requires two floppy disks for the test in addition to the disk which contains the test itself. If a network was available there would only have to be one test master disk. The disks that the students 'write' their tests on have to be collected from the students, distributed to the markers, re-collected, then distributed to other markers for checking and again re-collected. Would it not be easier for all the tests to be stored on one device with possibly another copy on a floppy-disk in case of a catastrophe on the network or mass storage device. This would reduce the number of floppy-disks required to half. The marking of the tests would be simplified since the markers would be able to access the tests from this central point as well. If an artificial intelligence system was adopted to perform the task of marking the tests the centralised data storage would also be of great benefit.

The questions of software piracy and software security have been extremely contentious issues of late. In an educational environment in particular we may have a large amount of expensive software available which should not be copied. The software available to the user on the network can be broadly categorised into two well defined categories viz. That which can be copied and that which can't. In the first category we may have software such as master disks for laboratory exercises and assignments. This software along with each users' own work area can be copied to allow the students to be able to work elsewhere if they wished. In the latter category we have all the commercial software which is subject to strict copy-write protection.

It would be an advantage if the network could thus provide as large a degree as possible of software protection i.e. preventing students from copying the commercial software.

From the above discussion it is immediately evident that a network can provide extensive advantages in this type of environment.

3.0 NETWORKS FOR EDUCATIONAL ENVIRONMENTS: WHY ARE THEY DIFFERENT?

Networks for use in an educational environment have some peculiarities that make them unique in some respects from those used in commercial environments.

A number of factors emerge when we examine the personal computer laboratory more closely. Firstly when we consider the type of work performed in such a laboratory we find that most of it is file orientated. A student will enter a Turbo Pascal environment and then edit, save and run this program. When this program is executed it may read a data-file, write a data-file or both. The essential point to note is that all the units being processed are files. A second aspect is that although all the students may be working on the same exercise, there is no communication required between the computers. We should now contrast this with typical commercially available network systems. Two aspects that are considered to be of prime importance in these networks are message passing between P.C.'s and the facility for a number of users to be running the same program and editting a common data-base for example. These features are not required in the system envisaged and in fact message passing between P.C.'s is quite undesirable during the writing of a test. A number of users may run the same program but the running of each persons program is completely independent to that of other users e.g. there would be no sharing of data bases.

Network loading is also rather unusual. The network will probably experience very heavy loading at the start of the laboratory session for example when the students access the files for that session. The loading will then dwindle to a low level while the actual exercises are being performed. The loading will reach extreme proportions during the writing of a test initially when the test is accessed and likewise at the end of

the test when everyone is saving their attempts. During a test it would also be undesirable for some students to receive faster service than others. Loading such as described is rarely encountered in such proportions in other environments.

Another important aspect to be considered here is that of operating systems. In this type of environment it is necessary that more than one type of operating system can be used on the P.C.'s concurrently or at different times. In this respect a number of commercial networks fail. The number of networks that support more than one operating system are by far in the minority[1]. I quote from Olivetti's "10-NET" product overview

> "10-NET" runs under MS-DOS 2.0. DOS function calls are intercepted by "10-NET" and re-routed across the network when appropriate.

This is one of many that share the same problem.

The aspects mentioned above illustrate the differing requirements between networks for use in educational environments as opposed to those used in business type environments.

4.0 NETWORK REQUIREMENTS

The requirements of a network for a particular P.C. laboratory that was investigated will be laid down in broad terms.

- The network should be able to cater for up to 40 P.C.'s.
- Each user on the network should have a response time comparable to or better than that obtained from a floppy-disk drive.
- Each user should be able to access a pool of common software as well as his own user area.
- As much copy protection as possible must be provided for software in the 'strictly copyright' area.
- Since the response time should be comparable to a floppy-disk the cost of each P.C.'s interface should be comparable to that of a floppy-disk drive unit.
- The network should be able to operate under more than one operating system.
- There should be no restriction on the type of computer that can be connected on the network

5.0 SYSTEM OVERVIEW

The system consists of a 'star-bus' topology as shown below in Figure 5.1.

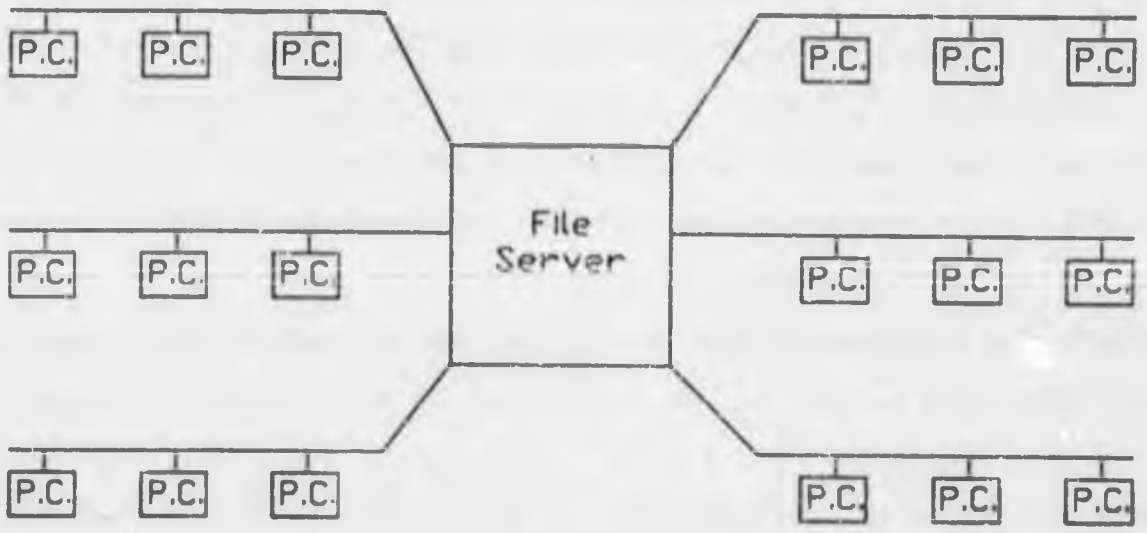

Figure 5.1 Schematic Diagram Of The 'Star-bus' Network Topology.

The reason for the term 'star-bus' is evident from the diagram. We have a star since the file server forms the hub of a star topology while each ray of the star is itself a bus. Hence the name star bus. Each of the busses uses the CSMA-CA (Carrier Sense Multiple Access with Collision Avoidance) access method. The bus itself operates at between 1 and 1.5 Mbits per second and consists of a RS422 twisted pair. The interface to each of the P.C.'s consists of a floppy disk drive emulator. This emulator is connected in the same manner that a normal floppy disk drive would be connected. The reasons for choosing this type of topology is described in detail in Appendix J. The data rate between the disk drive emulator and the P.C. is 250 Kbits per second. To maintain this data rate on a network of 25 P.C.' s for example requires data to be supplied at a bit rate of about 10 Mbits per second. the use of a single bus capable of this data rate would make the cost of each emulator much higher as well as adding to the complexity of the emulator circuitry. This single bus has rather been divided into a number of busses operating in parallel at a

lower data rate. A substantial reduction in the cost per emulator can be achieved but the complexity of the file-server hardware is increased. This compromise was accepted however.

The network appears to the P.C. on the hardware level as a floppy disk drive unit and to the software as a number of logical floppy disk drives. These additional logical disk drives are used by the file-server to provide access to the software pool as well as individual user areas. The data is transferred from the file server to the emulator in the form of tracks of data rather than individual files. This requirement is a direct result of the nature of the floppy disk emulator and will be explained later.

The P.C. is provided with a type of menu program, the selections being the software available for that particular operating system. One of these menu programs would be required for each of the operating systems that may be used on the P.C.. When the P.C. 'boots-up' initially off the network, the user would have to provide a user I.d. and password which is used in the network management. The menu program loaded would be that for MS-DOS since this is the most frequently used operating system at this stage. One of the options in this menu would be to change operating systems. The menu program performs a fundamental role in the software protection system since it is through this program that the user obtains access to the protected software on the file-server. The menu program 'maps-in' the requested software and hands over control to this software package. When the package terminates, control is returned to the menu program to 'map-out' the software package. By doing this the user, even if he leaves the menu program to the operating system, is unable to copy any of the protected software since it will be mapped out of the system. Problems do arise however in software packages that allow the user to copy files from within the package. Although elimination of the floppy disk drives altogether from the P.C. would ensure that no copying took place,

it was considered necessary that at least one drive should be retained. The reasoning behind this argument is that the students would be unable to take any of their work home with them if they wished to do so.

An explanation of the operation of the entire system is rather complicated and for this reason the explanation will start off with the simplest configuration. This will be expanded upon until the full system is reached.

The system developments that will be described are the following:-

1. One P.C. with the floppy disk drive emulator connected to the file-server. The emulation of a single floppy disk will be described.

2. The same hardware configuration as in (1) but 25 floppy disk drives will be emulated.

3. The operation of the menu program and software protection using the same configuration as in (2).

4. The combination of a number of P.C.'s operating as in (3).

5.1 USE OF ONE P.C. WITH THE FLOPPY DISK DRIVE EMULATOR CONNECTED TO THE FILE-SERVER. ONLY ONE FLOPPY DISK IS EMULATED.

This configuration is shown in the diagram below. See Figure 5.2.

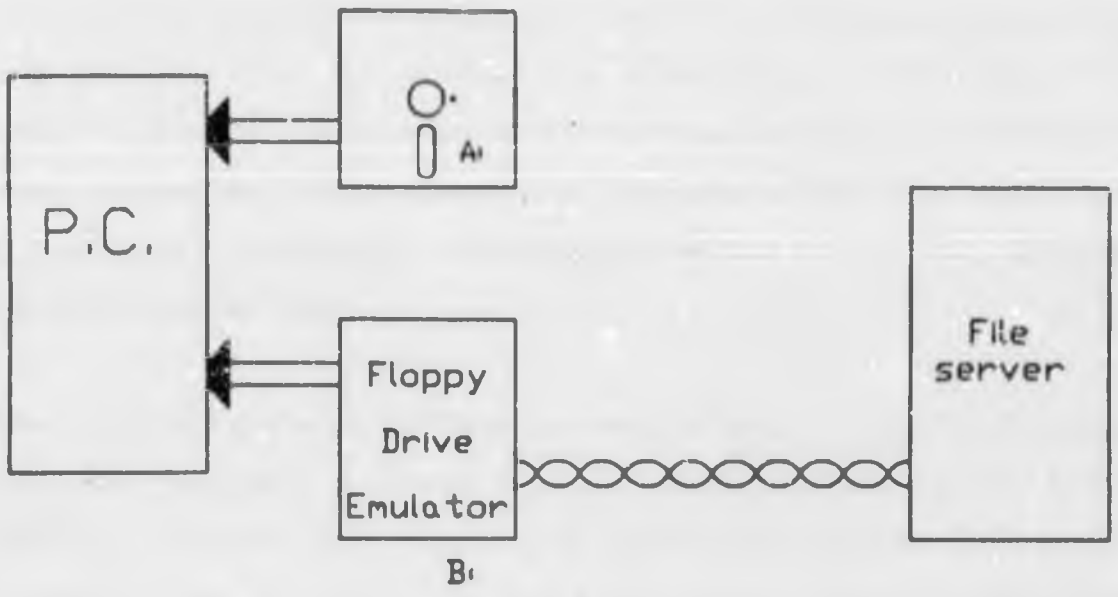

Figure 5.2 Schematic Diagram Of The Configuration For The Emulation Of A Single Floppy Disk

In the diagram above it can be seen that drive B on the P.C. is now actually the floppy disk drive emulator. This is done by simply plugging in the emulator instead of physical disk drive B.
Since we are only emulating one floppy disk, the file server only needs to be able to store 40 tracks of data for each side of the floppy disk. As will be described, the floppy disk drive emulator emulates whole tracks of data.

When a read access is made to drive B, the emulator will interpret the Floppy Disk Controller signals to determine which track and which side of the disk is required. Included as part of the emulator, as will be described, is a cache which stores tracks of data. At this point two situations may arise viz. the track cache on the emulator may be full,

or the cache may be empty or partly filled. In the latter case which will occur most often when the emulator has just been powered up, the track cache index will be searched to see if the required data is in the cache. Obviously immediately after power-up the cache will be empty. In general if the required data is found, the emulation process will commence immediately thus allowing the Floppy Disk Controller to begin reading in the required data. When the required data is not found in the cache, a 'request' is sent to the file-server for the required data. The file-server then accesses the required data from its cache or disk and sends it to the emulator. The emulator then updates its track cache and begins the process described again.

When the track cache is full and the required data is not in the cache, the cache management algorithm as will be described is implemented. This algorithm decides which data in the cache should be over-written. The process is then the same as described above viz. a request is sent to the file-server and the data returned is then placed in the area that has just been freed.

A write access to drive B is very similar to that described above for a read access. The entire track of data to which the write is taking place still has to be emulated and thus the same procedure as above is followed. When a track has been written to, this fact is flagged and the track cannot be replaced in the cache until the updated version of the track is written to the file server. This write takes place as soon as the emulator is able to access the file server for this write operation.

The fact then that the data is not coming from a physical floppy disk drive is totally invisible to the P.C.. The only modification that has been made to the P.C. is the replacement of the physical disk drive by the emulator.

5.2 EMULATION OF 25 FLOPPY DISK DRIVES USING THE HARDWARE CONFIGURATION IN (5.1).

To emulate 25 logical floppy disk drives requires the device driver that will be described to be loaded when the P.C. is 'booted up'. The configuration is now as shown below. See Figures 5.3 and 5.4.

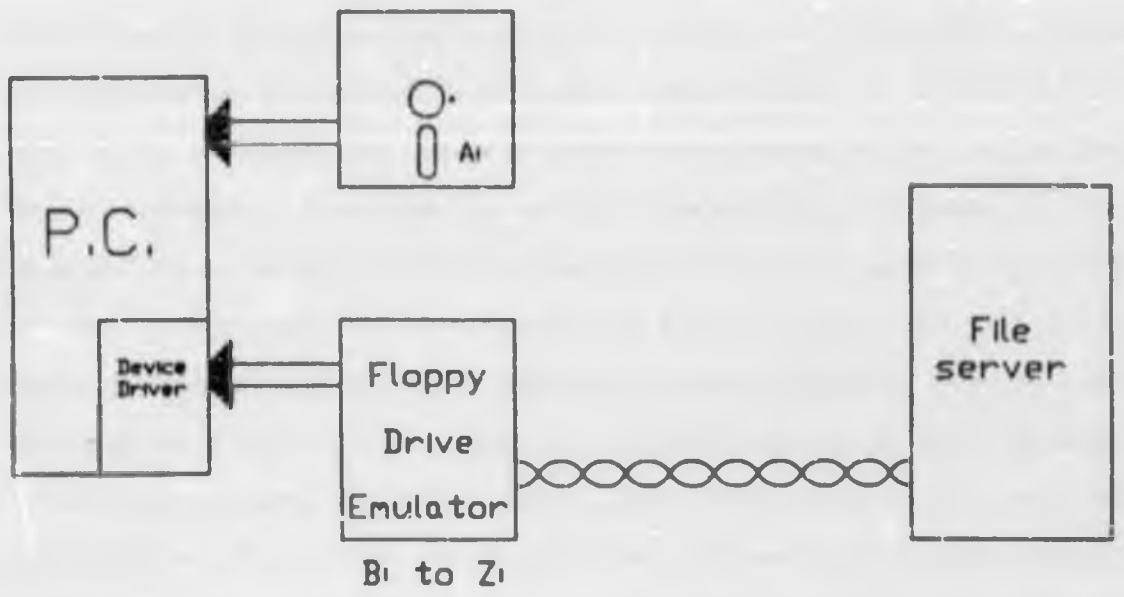

Figure 5.3 Schematic Diagram Of The Configuration For The Emulation Of 25 Floppy Disks

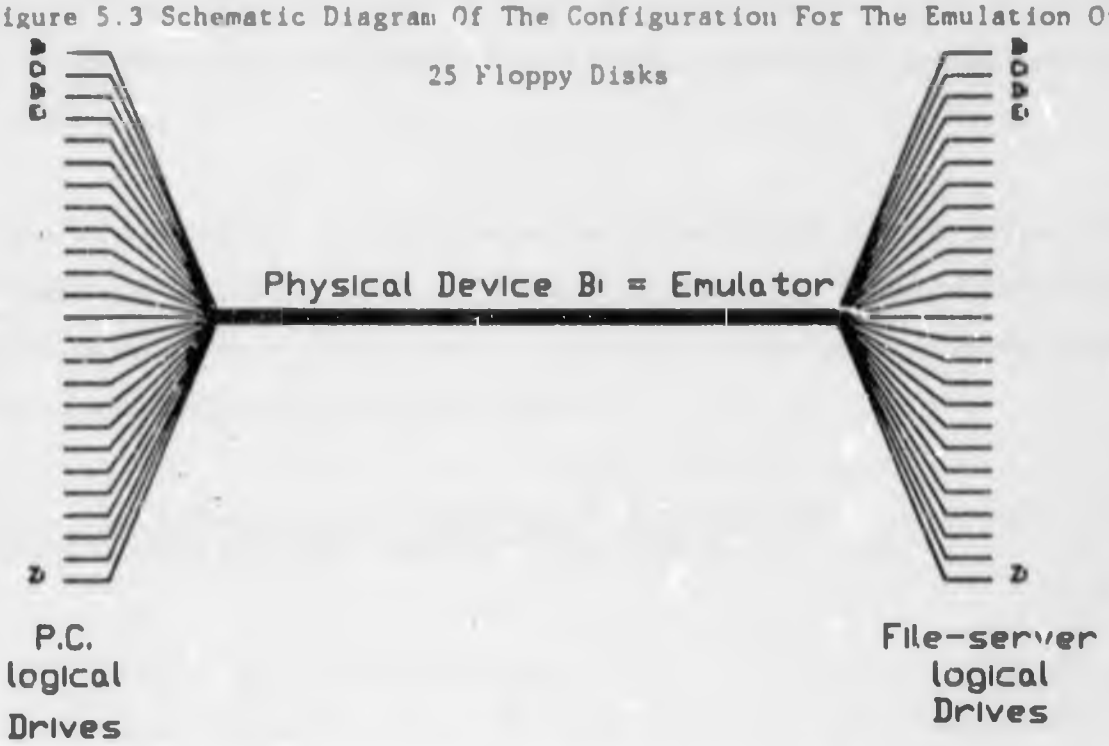

Figure 5.4 Logical Association And Physical Mapping Of The Disk Drives On The P.C. And The File-server

As described in detail in Appendix M, the device driver performs some 'pre-processing' of the DOS calls for the floppy disks. This pre-processing consists of mapping all the logical disk drives from D: to Z: to one physical device viz. drive B. (Note MS-DOS assigns the logical drives the letters of the alphabet from B to Z). This alone would be rather pointless since we would still be accessing the same data no matter which logical drive was selected. To overcome this a record is kept both in the device driver and the floppy disk emulator as to which logical device was accessed last. Whenever there is a change in the logical device being accessed, a 'message' is sent to the emulator informing it of the change. This message is sent to the emulator by writing a sector to track 40 which is beyond the normal range of track numbers used viz. 0 to 39. Sending this message is vital since we may have track 1, say, of each of the logical devices in the cache on the emulator and we must be able to distinguish between which one is required. This write is performed using one of the BIOS routines. The track emulator interprets this message and all subsequent searches of the track cache index include this drive identifier as one of the search criteria. The reason that track 40 is used for message passing and the mechanism used in message passing is described in Appendix L.

The user would then be able to access in effect 26 floppy disks. This includes his physical drive A along with 25 floppy disks of data on the file-server. Any of this data is accessible in the same way as data would be accessed from any other disk drive.

5.3 THE OPERATION OF THE MENU PROGRAM AND SOFTWARE PROTECTION ON THE SYSTEM DESCRIBED IN (5.2) ABOVE.

The operation of the menu program is vital in the attempt to prevent unauthorised software copying. The idea itself is rather simple. When he user 'boots-up' the computer the first menu program will automatically be executed. This menu will be that of the programs available that use

the MS-DOS operating system. This program then prompts the user for his choice. When a choice is made the file server is notified of the requested software. The file-server then associates virtual floppy disks in its mass storage with as many disks as the package requires. The current drive is changed to whichever drive the package is on. The program is then loaded and executed using the normal DOS call. This commences with a directory search for the file-name. The directory was empty previously but now it contains the required file-name.

An example may be useful to further illustrate the system. Consider a user that boots up the computer and is provided with the menu choice. He then branches from the menu to the operating system level. If the user now asks for a directory of any of the logical drives on the file server, the response will indicate that there are no files on any of these drives. He is unable then to copy any software.

Assuming the user returns to the menu program and requests a program called 'Gamma-graphix' for example. This package when normally run on floppy disks occupies three disks. The menu program then maps this package into drives B, C and D say. At this stage if the user was able to exit to the operating system and ask for a directory of drives B, C or D he would find all the files on these disks that would normally be on the individual floppy disks. (He would then be able to copy these files). The menu program would then commence execution of Gamma-graphix. When the user exits from Gamma-graphix whether normally or abnormally, the menu program would map Gamma-graphix out of drives B, C and D. If the user now gets a directory of these drives they would indicate that there are no files present.

When a software package is requested in the menu program, a message is passed to the disk emulator in the same way as in (2) above. The information contained in such a message is different however. The message content in this case would include the number of floppy disks the package

requires as well as an 'application number'. These messages are forwarded directly to the file-server. Each application package has an application number that has an important role in the overall system. For example when the file-server maps out a software package a number of tracks of that package will probably be present in the disk drive emulator track cache. We could remove these tracks from the cache though it would be more efficient to leave them there so that if the user left package A and then decided soon after that he was going to use package A again, the tracks of package A still in the cache would not have to be re-transferred across the network.

The application number becomes an added search criterion when the track cache index is being scanned to find a particular entry. The present application number being used is stored in the floppy disk drive emulator and is updated each time the menu program writes a message to the emulator.

The menu program would then provide a degree of software protection by not allowing the user to have direct access to the software files.

5.4 A NUMBER OF P.C.'S OPERATING AS IN (5.3) ABOVE.

Extending the above system to a number of P.C.'s does not require much effort at all. The only requirements now are that the user is prompted for a user I.D. and password when the P.C. is booted up initially. Each P.C. has associated with it a particular node number. The user I.D. provides a logical link to each user for the file-server while the node number provides a means for the network software to know where exactly to send the data. The network software also now has to contend for the network since the emulator file-server link is now shared by more than one user.

6.0 THE FLOPPY DISK DRIVE EMULATOR

Up until now reference has been made to the floppy disk drive emulator that provides the interface between the P.C. and the network. Naturally a few questions arise viz. What is this floppy disk drive emulator, how does it work and why emulate a floppy disk drive at all. These questions will now be answered.

Firstly, what is a floppy disk drive emulator? The disk drive emulator is a piece of microprocessor based circuitry that is able to emulate the characteristics of a floppy disk drive unit. Operation of the emulator will be discussed in detail later. The most interesting aspect is why emulate a floppy disk drive. If we look at microprocessor systems over recent years we soon see that the floppy disk has been the fundamental means of transferring data between these machines since they are in effect removable mass storage media. To execute a number of software packages on a P.C. for example we would load these packages from a number of floppy disks. The driving force behind the floppy disk drive emulator idea as the connection to the network is that instead of physically loading separate floppy disks, the network could provide the same data, that would be stored on a central file-server, to a floppy disk drive emulator. The P.C. is then totally unaware that the data is coming from a network and not from separate floppy disks. To appreciate why the floppy disk drive itself should be emulated we must examine the whole disk system of a P.C..

Components Comprising the Floppy Disk System in a P.C. The primary components of the floppy disk system in a P.C. are identified and their functions and structure described. The components are shown in Figure 6.1.

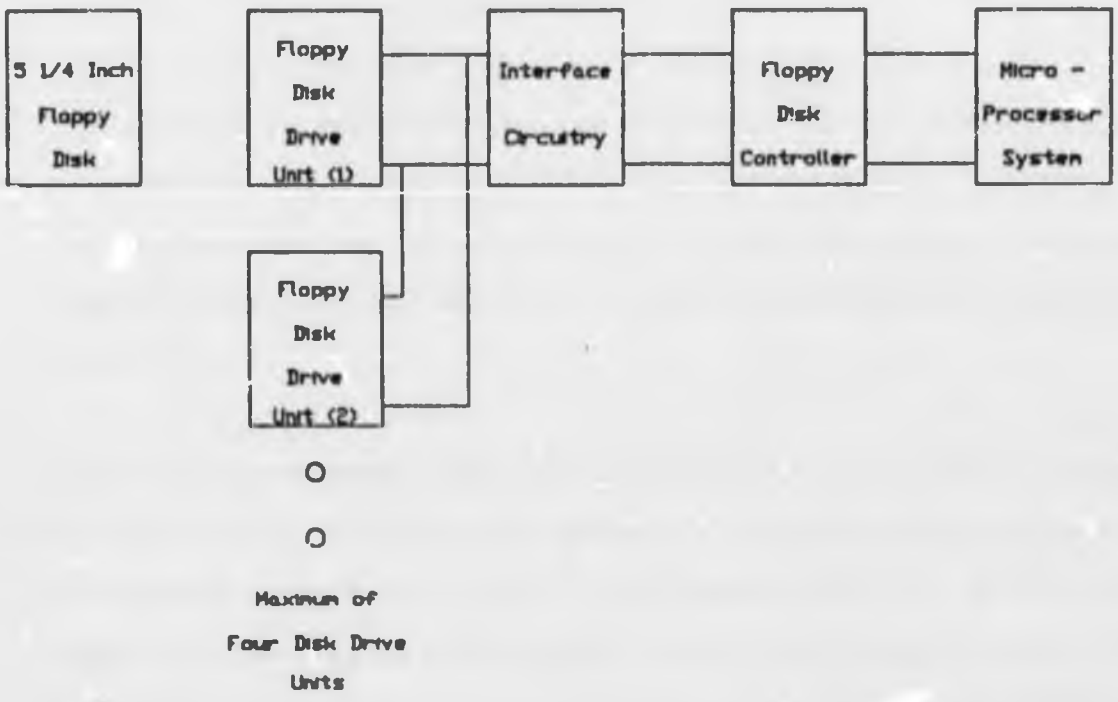

Figure 6.1 Components Comprising The Floppy Disk System In The P.C.

Functions:

Floppy Disk: A removable magnetic data storage medium which is double sided, divided into 40 tracks each subdivided into 9 sectors.

Floppy Disk Drive Unit: This provides a 'recording and play back' facility for the floppy disk.

Interface Circuitry: This provides the necessary line driver receiver circuits which are required between the disk drive units and the floppy disk controller as well as data separation circuitry.

Floppy Disk Controller: A dedicated processor provides and interprets the signals associated with the disk system. 'High level' commands are provided to the controller by the microprocessor system. The controller processes these commands thus alleviating the microprocessor of this task.

Microprocessor System: This consists of the hardware making up the remainder of the P.C. This provides decoding, DMA and interrupt facilities.

The BIOS (Basic Input/Output Subroutines) provides low level software for the floppy disk system (among other things).

From the above description we can see that only two components may be emulated viz. the floppy disk drive unit and the floppy disk controller. When we consider the inputs and outputs and complexity of emulation of each of these devices, emulation of the floppy disk drive unit is more favourable.

From the diagram we can see that the floppy disk controller is interfaced directly to the microprocessor system. This requires that the controller be emulated on both the hardware and software levels. As described in Appendix C the floppy disk controller is a very complex device. From a purely practical point of view emulation of the controller would require in a number of situations that the component be unsoldered from a circuit and be replaced with a plug in header, say, that is connected to the emulation circuitry. From an installation point of view the user would have a daunting task on his hands.

Emulation of the floppy disk drive unit is restricted to hardware emulation. The number of inputs and outputs to the emulator is much smaller. A disadvantage of this system, however, is that it is not possible to identify which sector is required by the floppy disk controller. It is only possible to isolate which track and which side of the disk is required. See Appendices B and C.

An alternative to emulating both the floppy disk controller as well as the floppy disk drive is the design and construction of a plug-in board for the P.C.. This is the form that most of the commercially available network boards take. These boards can interfere with the DMA and interrupt system on the P.C. (e.g. the same interrupt used by more than one board, the same I/O addresses may be used etc.). Extensive software is often also

required to drive them. This software can often cause problems when different operating systems are used with the same network card and may even be problematic with everyday software packages. In this respect emulation of the floppy disk drive unit does not interfere with DMA, interrupts or the software since we can virtually say that the software is un-modified. The MS-DOS device driver for the extra logical drives is virtually identical to that for the normal disk drive system. The only exception is the message passing to track 40 but even this is totally transparent to MS-DOS.

System busses into which plug-in boards are inserted and floppy disk controllers are very specific devices. Emulation of the disk drive unit is less specific since a number of disk drives have the same interface. The small discrepancies that may occur can be overcome by adapting the emulation principles developed. With speculation that future P.C.'s will be equipped with 3½ inch drives makes emulation of the disk drive a logical step. Current specifications for 3½ inch devices indicate that the emulator can be used, with possibly some small software modification on these systems [2].

By keeping the P.C. interface as we would by emulating the disk drive it would be possible to include P.C.'s of various makes on the same network. If these P.C.'s share the same operating system as other makes of machine on the same network, it would be possible for files to be shared by these machines. This would be more difficult if a plug in card were used, say, since these cards would have to be tailored to the individual systems.

6.1 THE FLOPPY DISK DRIVE EMULATOR (HARDWARE)

The floppy disk drive emulator can be divided into six sub-sections. These sections are:-

1. A decoder to process data being written to the disk drive.

2. An encoder to reproduce data being read from the disk drive.
3. A track counter to monitor the required head movement.
4. The CPU, RAM and EPROM to control the emulator and provide the track cache.
5. The network interface.
6. The interface to the floppy disk drive interface.

As described in Appendix D the data recorded on the floppy disk is MFM encoded. If the fact that the data is MFM encoded is disregarded for the moment and the data format on the floppy disk as described in Appendix A is considered, the following characteristics become apparent:

1. The data stream is very similar to that on a synchronous communications link.

2. The data is divided into blocks on which Cyclic Redundancy Checks (CRC) are calculated.

Considering these two observations a synchronous communications device was chosen to perform these tasks. Using NRZ (Non Return-to-Zero) encoding on this communications chip the data entering and leaving the emulator would just require MFM decoding and encoding respectively. The data flow is shown in Figure 6.2.

WD and RD are the data input and output to the floppy disk drive units. The lines shown here are the same as those on the 34 way interface cable (See Appendix B) except they have already been buffered.

This is conceptually how the data flow is managed. Unfortunately the implementation is not quite so simple. The full details of these subsections are given in Appendices E and F.

It is necessary to monitor the head position so that the correct track can be emulated when required. The required head movement is indicated to the floppy disk drive by two lines. These lines, DIRection and STEP, convey this information. The state of the DIR line determines whether the head must move inwards or outwards. Each pulse on the step line represents the movement to move from one track to the next.

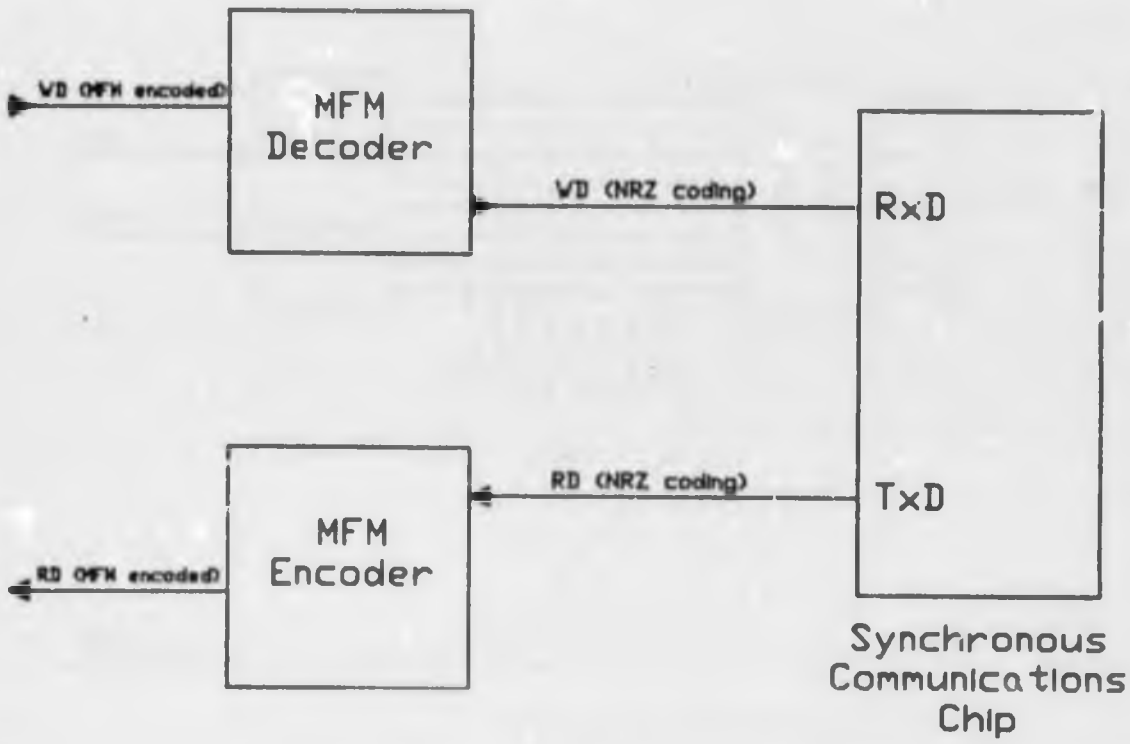

Figure 6.2 Flow Of Data In And Out Of The Emulator

For the floppy disk controller to know where the head is immediately after power-up, for example, a feedback signal is provided from the floppy disk drive unit to the disk controller. This signal, TRACK0, indicates that the head is positioned over track 0 (the outermost track of the disk). The floppy disk controller, when issued with a Recalibrate command [3], steps the head outwards until the TRACK0 signal becomes active. The floppy disk drive controller then sets its internal counter to zero.

The principle of the floppy disk controller's track control circuitry is extended to the emulator. An up-down counter whose direction is controlled by DIR and clocked by STEP performs this function. The outputs are gated to provide the TRACK0 signal when the counter's value is zero. The outputs are also made available to an input port on the CPU controller so that the counter can be monitored.

The track counter is shown below in Figure 6.3.

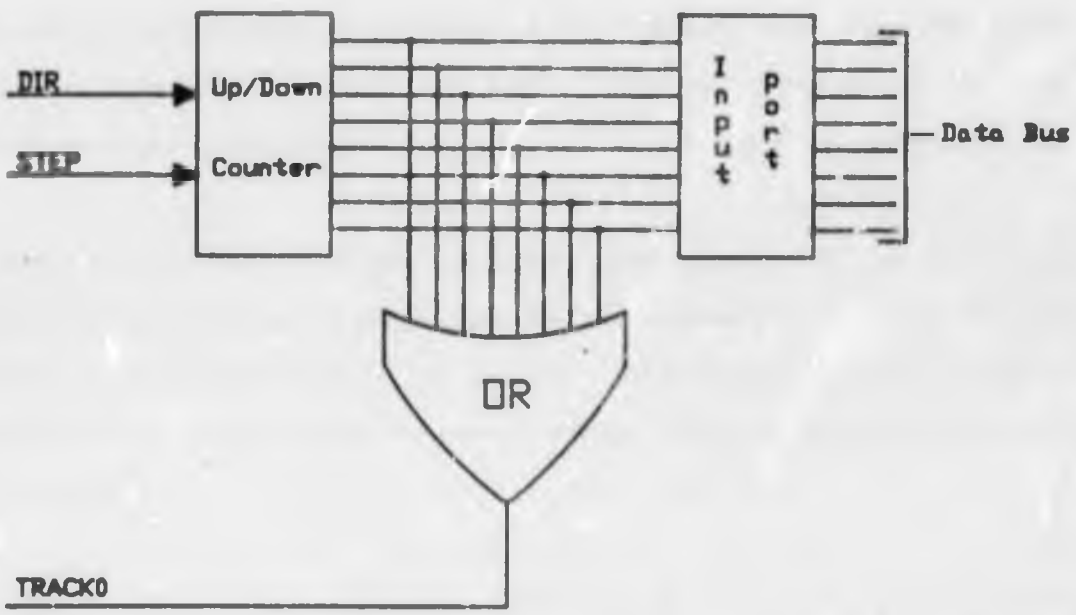

Figure 6.3 Schematic Diagram Of The Emulator Track Counter

The entire functioning of the emulator is co-ordinated using a microprocessor based system. the central processing unit used is the INTEL 80188. This is supported by 256Kbytes of RAM, (expandable to approximately 1Mbyte), 8Kbytes of EPROM, 2 Z8530 Synchronous Communications Controllers, an 8 bit input and an 8 bit output port.

The 80188 CPU is ideal in this application since it combines a number of peripheral devices within one physically small component. A dual channel DMA controller, 3 16 bit timers, an interrupt controller, bus controller,

chip select logic, ready generation logic as well as a clock generator are included in the package. 1 Mbyte of memory is directly addressable which is extremely useful for cache management. The timer, clock generator and DMA unit are used to overcome the problems commonly associated with dynamic RAM memory. See Appendix H. In the present implementation of the emulator only 256Kbytes of RAM are used. The emulation software and general 'house-keeping' software resides in the EPROM. The two Synchronous Communications Controllers (SCC) are used for the emulator and network. As mentioned above the input port is required for the track counter. An output port is provided to drive L.E.D.'s to indicate various states on the emulator and for general diagnostic purposes. The SCC's provide various other control inputs and outputs that are required.

The network interface consists of direct transmission of the data clock along with the data on a three line system between the nodes. The only additional circuitry required on the SCC's are the RS422 line drivers and receivers. The line drivers outputs are controlled by the RTS line of the network SCC.

Circuitry is required to interface the emulator to the floppy disk drive interface circuitry. This circuitry is based on an open collector bus type of system. All the outputs of the emulator have to be equipped with open collector drivers while the inputs must only accept information on the bus when the relevant physical drive is selected. See Appendix G. The circuitry is simple, however, and merely consists of latches and pull up resistors on the inputs and open collector drivers on the outputs.

6.2 THE FLOPPY DISK DRIVE EMULATOR (SOFTWARE)

The first aspect of the emulation software that will be discussed is that of the track cache. An area of RAM memory (192K) in this case has been set aside for creating such a cache.

An index of the cache contents is kept separate from the data area of the cache. This index contains entries identifying the track number, the head number (i.e. side of the disk), the application number, counters for the implementation of the caching algorithm and a pointer to the actual data area. The function of the track, head and application number has been explained in the system overview. When the cache is full, a caching algorithm is implemented to determine which track entry should be replaced. The algorithm is based on a method where both the frequency of access as well as when last an entry was accessed are used in the decision algorithm. This decision algorithm is particularly well suited to small sized caches. A detailed explanation of both the cache and the replacement algorithm is given in Appendix I.

Important aspects of the flow-chart will be mentioned here. See Figure 6.4.

The hardware of the emulator needs to be initialised and the memory tested before the emulation process can be started. The CPU itself needs to have certain parameters set up before the rest of the software can be executed. Memory and I/O mapping as well as 'wait-state' generation are of primary importance. One of the three timers as well as one of the DMA channels need to be configured to commence the refreshing of the emulator's dynamic RAM. DMA cycles are performed at fixed time intervals to carry out this function. Faulty memory locations are located by writing known bit patterns to an area of memory and then reading the contents of this area and checking for correspondence. If all the memory functions as required the track cache is initialised. The current disk and application numbers are given values that would not exist under normal circumstances and this ensures that when the cache index is searched, the search fails and the data is requested from the file server.

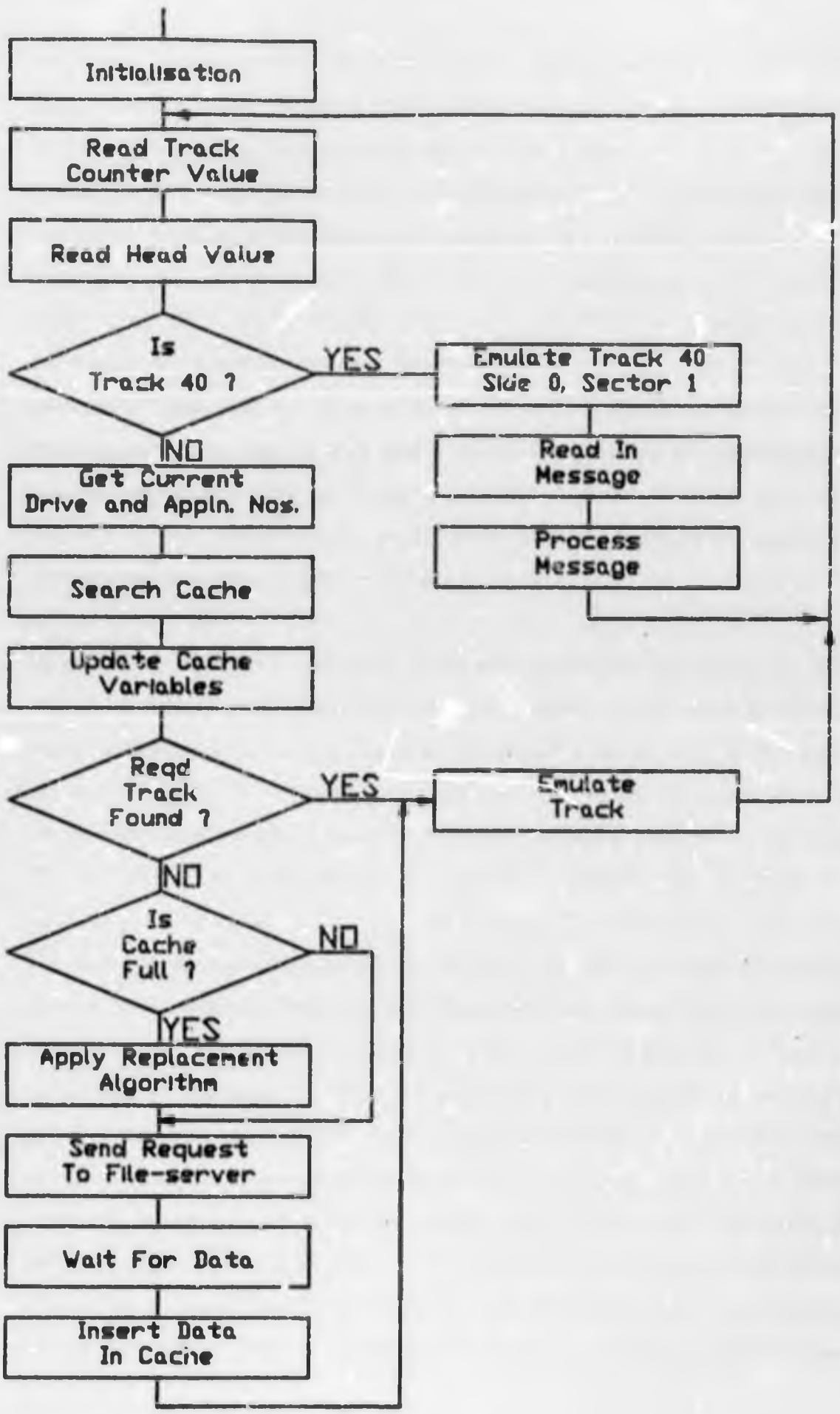

Figure 6.4 Flow-chart Of The Emulator Software

The track counter value is read from the input port. One of the control inputs on the SCC is used to check which head is required. This is possible since the head can be only one of two values viz 0 or 1. If the track counter value is y it is immediated identified with the exceptional case of a message being passed to the emulator and an abnormal track emulation takes place. The track size is reduced to 1 sector and only track 40, side 0, sector 1 is emulated. This is done primarily to save time as emulation of any further sectors is a waste of time. The message is then read in. This is done in the same way as any normal sector write except that the data is not written into the cache. Processing the message may simply involve updating variables on the emulator such as the current drive number and/or application number, sending an application request to the file server or both.

If the track counter value read is between 0 and 39 then using the stored drive and application numbers, the track index is searched to find an entry corresponding to the required track and side as well as the correct drive and application number. If the required entry is found, a pointer to the data area is returned and the track emulation process is initiated. The variables for cache management are also updated. In the case of an entry not being found the cache replacement algorithm comes into effect. The entry used least frequently is replaced. If the situation arises where two or more entries have the same frequency of use the one that hasn't been used for the longest period of time. This algorithm is described in detail in Appendix I. Once the area of the cache that is to be overwritten has been identified a message which includes information which identifies the requesting emulator (source address), the type of message (request for data), the required drive, application, track and side numbers, is sent to the file server. The actual access method on the network (CSMA-CA) is described in Appendix K. This method was chosen for its ease of implementation both in terms of hardware and software. With the small

number of users on each of the buss' s as explained in Appendix J (+- 5 users per bus), each user should receive sufficient use of the network.

When the data is returned from the file-server it is inserted into the track cache. The main emulation software is then called. As is explained in Appendix P, the track emulation begins with the generation of the index pulse followed by the gap preceding the first sector. Before each sector is emulated the track number as well as the side number is re-read from the respective input ports so that as soon as the floppy disk controller has performed the required function on the track initially chosen, the emulator can respond to any change in the requested track or side. Continued emulation of the originally chosen track is a waste. Emulation of a particular track continues therefore until there is a change in the emulator track or side inputs. The formatting information between sectors has been reduced to the minimum possible so that as much emulation time as possible is devoted to emulating data rather than formatting information that is useless to the user.

7.0 REQUIREMENTS OF THE FILE-SERVER

The requirements of the file-server both in terms of hardware and software are discussed.

From a high level point of view the file-server has to manage the access of a number of users both to an area of common software as well as the individual user areas. The file-server software is closely associated with the menu program on the P.C. and the finer details of both their implementations are beyond the scope of this report. In general though the menu program instructs the file-server to associate a certain number of floppy disks with logical disks on the P.C. Upon a request from the P.C. the file-server must be capable of providing any track required from one of these logical disks. The operating system on the P.C. is always in control of the logical disks themselves thus allowing the operating system on the file-server to be different from that on the P.C. It would be an advantage if the file-server used a multi-tasking operating system so that disk accesses for example can be taking place at the same time as other processing tasks. The file-server requires extensive mass storage facilities, the access time of which is of extreme importance. In this regard the implementation of a track cache on the file-server would reduce the access times particularly for software that is access by a number of users.

The lower levels of software are dependant on the type of hardware interface that exists between the file-server and the network. The two situations that can be defined here are the cases where the processor controlling the file-server controls the network, and then the case where the network is controlled by a separate processor. In the latter case communication with the network is by means of messages passed between the processors. In the first case the hardware of the file-server needs a synchronous communications port capable of handling SDLC communications

at speeds between 1 and 1.5Mbits per second. Software also has to implemented to control the media access. This makes the use of a multi-tasking operating system virtually obligatory.

The second approach involves the inclusion in a multiprocessor environment of a processor to handle the network management and media access. Communication between the network processor and file-server processor is by means of two queues. Requests from the network are entered into the input queue while data for the network is extracted from an output queue. These queues would be maintained in a memory area that can be accessed by both processors. From the file-server's point of view communication with the network would consist of fetching requests from the input queue, processing them and providing the results in the output queue. This relieves the file-server of a large amount of processing.

The proposed system does not therefore pose any major constraints on the capacity, make of, or operating system used, on the file-server.

8.0 CONCLUSION

A set of network requirements for an educational environment were derived after analysing the requirements and peculiarities of such a system.

The proposed system , based on a 'star-bus' topology, provides a low cost, flexible system. The file-server which forms the hub of the star topology is subject to no major constraints and can be of any make and use any operating system but should have mass storage facilities with access times that are as short as possible. Using an RS422 twisted pair bus provides a medium speed link at between 1 and 1.5 Mbits per second as well as being cheaper, in terms of both material and installation costs, when compared with a coaxial cable based system. The CSMA CA access method provides a simple yet effective means for controlling each of the busses especially since the number of users per bus is small. No sophisticated hardware or software is required to implement it either. The use of a radio based system on one or more rays of the star for connecting computers that are some distance from the file-server should be investigated since the CSMA CA access method does lend itself to this type of medium as well.

The use of a floppy disk drive emulator as the interface between the P.C. and the network is certainly a new approach. This method eliminates most of the hardware incompatibilities that are often associated with plug-in network boards as well as dispensing with the need for operating system modifications. The design, implementation and testing of such a unit has been described. Certain constraints laid down in the network requirements have been satisfied by this interface. The cost of the interface is approximately the same as that of a typical floppy disk drive unit. No components have been used that are rare or expensive. Most of the components can be obtained from more than one manufacturer. The performance of the disk drive emulator unit when tested

as a stand alone unit proved to be excellent. Response time was within the requirements and no data errors were encountered during the testing.

Two disadvantages of the system must be mentioned. Due to the structure of the network and the P.C. interface, the nett data rate between the emulator and the P.C. is 250Kbits per second. When a single user, therefore, is using the system he will not receive the full benefit from the network operating at 1.5Mbits per second, say, due to the lower transfer rate between the emulator and the P.C.. The second matter is not really a disadvantage but should be considered for optimal performance. Since the data is transferred between the file-server and the emulator in the form of tracks, the files should be kept in a form that all the sectors on the tracks transferred actually carry useful data. This can be ensured by keeping the files on the file-server in a contiguous form.

A limiting factor of the system under heavy loading could be the data transfer rate between the file-server hardware and the file- server mass storage system. This would limit the amount of data available to the network. A cache in the memory of the file- server could reduce this limitation in situations were the loading is heavy but a number of users are requesting the same software.

These last two limitations should not make the overall system less attractive. To ensure that the requirements laid down are met further research and testing is required on the file-server and the network itself. The performance of the file-server is very important since all the data being transferred on the network passes into or out off it. Connection of a single floppy disk drive emulator to the file server will give a good idea of the best performance possible. Extending the testing to a full complement of P.C.'s on a ray of the star will give a good in-

dication of the overall performance of the system since any additional rays added will be operating in effect in parallel. The file-servers capabilities will be the limiting factor. Implementation of a printer and/or a plotter server using the message passing mechanism on track 40, as described, should be investigated. These servers will have to use other tracks though.

The research described in this dissertation has described the network system in general terms and the P.C. interface in detail. It has also provided a number of aspects that should be researched to optimise the performance of the network as a whole.

APPENDIX A THE STRUCTURE OF FLOPPY DISKS

The surface is divided into a number of concentric tracks or cylinders as shown in Figure A1. On the 5¼ inch disks there are typically 40 tracks. The beginning of a track is located by means of a small hole which is optically sensed on each revolution of the disk.

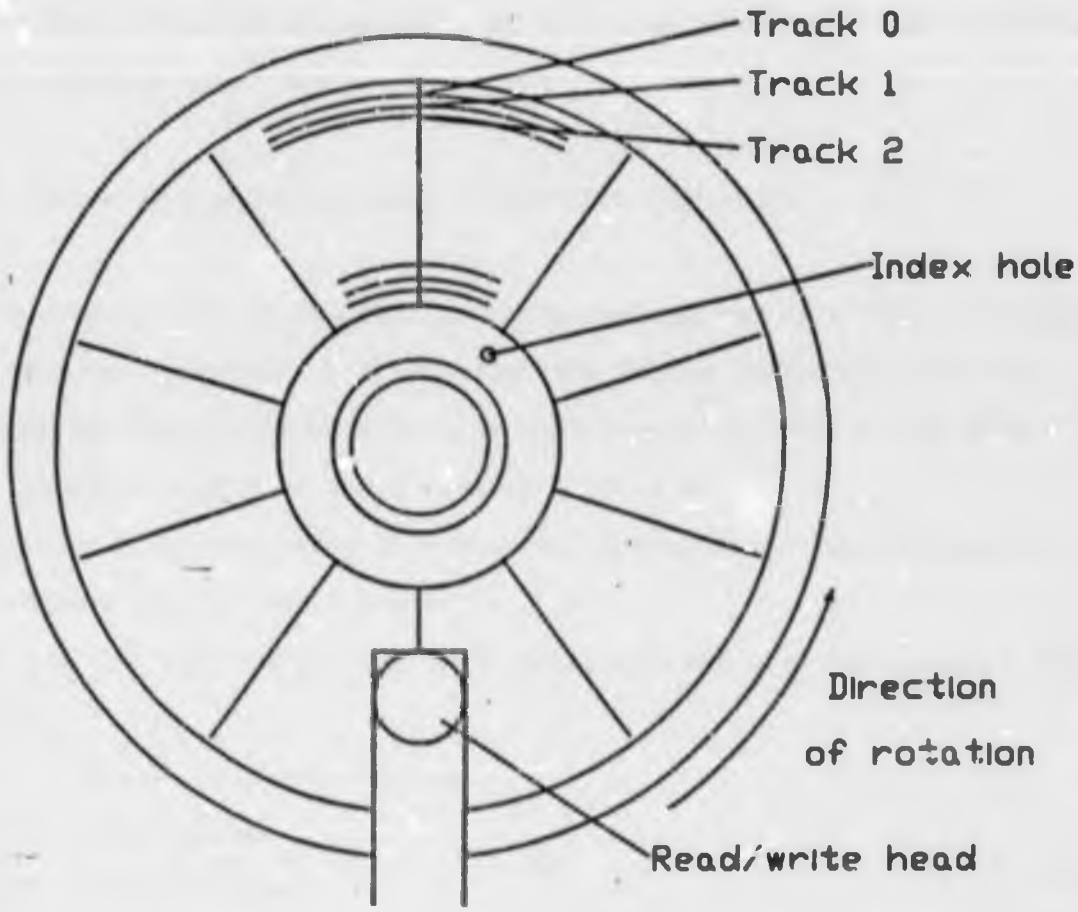

Figure A1 Subdivision Of The Disk Surface Into A Number Of Tracks.

Each track is further subdivided into sectors. See Figure A2. These sectors may be 128, 256, 512 or 1024 bytes long. The method of indicating the start of sectors is called soft sectoring which is the IBM standard method. This method allows software selection of sector sizes. Each data sector is preceded by a unique sector identifier that is read/written by the disk controller. The sector size is specified when the disk is formatted. The most popular disk format used in the I.B.M. type P.C.'s is

the 360K format. These disks are double sided which means there is a read/write head on either side of the disk. The disks rotate at 300 r.p.m which gives a rotation time of 200ms.

The 360 Kbyte capacity is achieved as follows:-

The disk is subdivided into 40 tracks which are then further subdivided into 9 sectors each with 512 bytes. (1/2Kbyte). (Note this applies to MS-DOS version 2 and subsequent versions). This gives a total of ½ X 40 X 9 = 180K. This is the capacity of each side of the disk and since the disk is double sided the total is 360K.

Each sector is composed of four fields. See Figure A3.

1) The Sector I.D. Field. This is ten bytes long and is written only when the disk is formatted. This provides the sector identification that is used by the controller when data is read from or written to the disk.

The ten bytes each have the following functions:

Bytes 1 - 3 are A1H bytes with missing clock pulses. These form part of the address marker. See Appendix D.

Byte 4 - I.D. Address marker. This specifies the beginning of the I.D. field.

Byte 5 - Track (cylinder) address

Byte 6 - Head address

Byte 7 - Sector address

Byte 8 - Sector length code

Bytes 9 and 10 - This is a 16 bit CRC for the I.D. field calculated on the first eight bytes.

The controller supplies the address mark during formatting and the three preceding A1H bytes. The rest is supplied by the processor software.

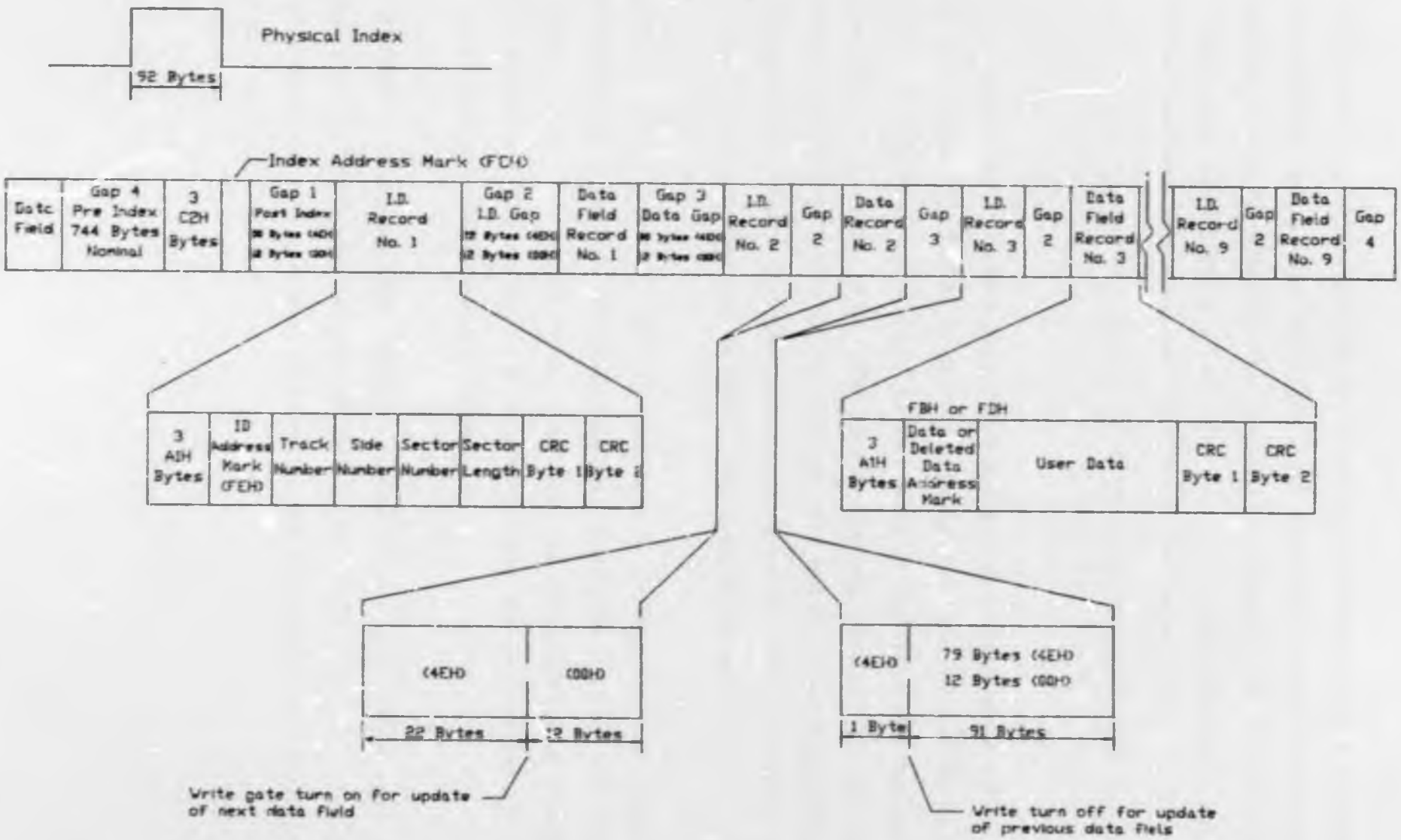

Figure A.2 Diagram Of The IBM System 34 Double Density Track Format

2) The Post I.D. Field Gap (Gap 2). This gap is written during formatting. During write operations, the device write circuitry is enabled within the gap and are re-written each time a sector is updated. During read operations the trailing bytes of the gap i.e. the 12 00H bytes are used to synchronise the data separator logic with the upcoming data field. The remainder of the gap consists of 4EH bytes as shown in the Figure.

3) The Data Field

This field also commences with 3 A1h bytes with missing clock pulses as in the sector I.D. field. In this case though they are followed by an FBH byte. If the data area is found to be faulty during the format operation the FBH byte is replaced by a FDH byte indicating a bad sector. The rest of the field is filled with the required data and has a two byte CRC for the whole data field appended at the end (Note The CRC calculation includes everything from and including the three A1H bytes).

4) Post Data Field Gap (Gap 3). This gap is written when the track is formatted and separates the proceeding data field from the next I.D. field on the track. This gap is not written after the last sector on the track. The number of bytes in this gap is programmable and is 22 bytes of 4EH and 12 bytes of 00H as shown in Figure A2.

The CRC'c calculated above are calculated on the most significant bit first of each byte. The polynomial used is $x^{16} + x^{12} + x^5 + 1$. The CRC generators and receivers must be preset to all 1's before the calculations are started.

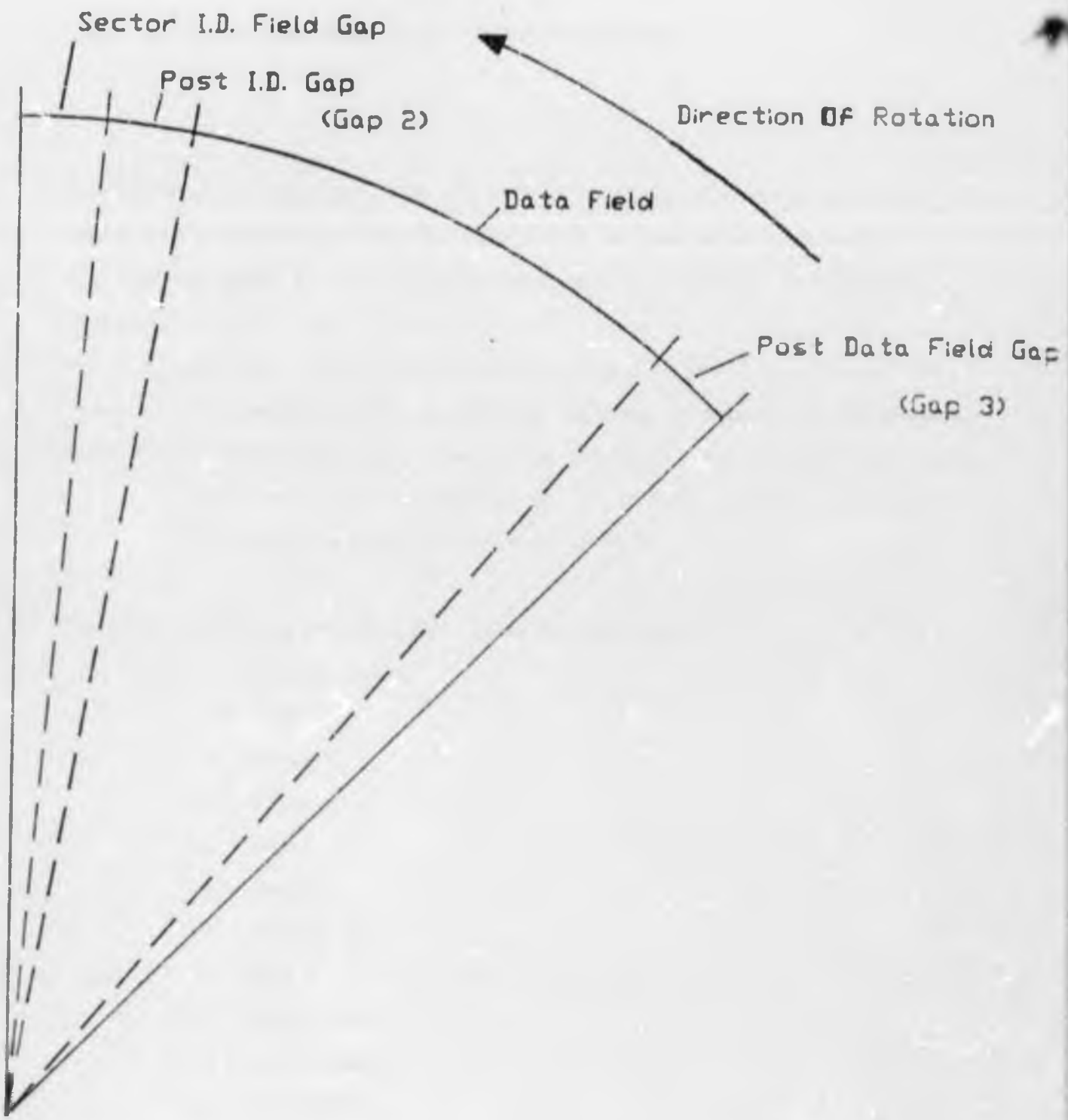

Figure A.2 Composition Of A Sector

APPENDIX B THE FLOPPY DISK DRIVE INTERFACE

The interface to the floppy disk drive unit consists of a 34 way connector cable. The odd numbered pins of this cable are grounded (i.e. pins 1 - 33). The remaining lines carry input and output signals at standard TTL levels.

Output lines: These lines are driven by standard open collector gates. The diskette drives provide the pull-up resistors for these lines.

Input lines: Each input line presents one low power Schottky (LS) load to the diskette drives connected to the interface and is terminated with a 150 Ohm load resistor to +5 V.

The even numbered lines have the following functions:

2,4,6,34 : No connection
8 : Index
10 : Motor 0
12 : Select 1
14 : Select 0
16 : Motor 1
18 : Direction
20 : Step
22 : Write Data
24 : Write Enable
26 : TR0 (Track 0)
28 : Write Protect
30 : Read Data
32 : Hdsel (Head select)

In the following table 0 denotes an output while 1 denotes an input from the P.C.'s point of view.

Signal	Direction	Description
Select 0, select 1	O	Drive Select - used to enable the driver outputs and Rx inputs of the diskette drive - active low. Select 0 for drive A, select 1 for drive B.
Motor 0, motor 1	O	Motor Enable - controls spindle motor low - motor on high - motor off Select 0 for drive A, select 1 for drive B.
Step	O	Step - used to move the R/W head in or out one cylinder on the selected drive for each pulse present on the line. The direction of motion is determined by the DIR line.
DIR	O	Direction - Moves head in if low, out if high, used in association with Step.
Hdsel	O	Head select - The side 1 (upper head) is selected when this line is low

low.

WE	O	Write Enable - enables write current to the R/W head when active (low).
WD	O	Write Data - data to be written on disk
INDEX	I	Index - one pulse appears on this line each time the index hole is detected (i.e once per revolution)
WP	I	Write protect - low when disk write

Signal	Direction	Description
Select 0, select 1	O	Drive Select - used to enable the driver outputs and Rx inputs of the diskette drive - active low. Select 0 for drive A, select 1 for drive B.
Motor 0, motor 1	O	Motor Enable - controls spindle motor low - motor on high - motor off Select 0 for drive A, select 1 for drive B.
Step	O	Step - used to move the R/W head in or out one cylinder on the selected drive for each pulse present on the line. The direction of motion is determined by the DIR line.
DIR	O	Direction - Moves head in if low, out if high, used in association with Step.
Hdsel	O	Head select - The side 1 (upper head) is selected when this line is low
WE	O	Write Enable - enables write current to the R/W head when active (low).
WD	O	Write Data - data to be written on disk
INDEX	I	Index - one pulse appears on this line each time the index hole is detected (i.e once per revolution)
WP	I	Write protect - low when disk write

		protected
TR0	I	Track 00 - low when head over track 0
Read Data	I	Data read from the disk (data with imbedded clock information)

APPENDIX C THE FLOPPY DISK CONTROLLER

The Floppy Disk Controller (F.D.C.) used in the I.B.M. type P.C.'s is the Intel 8272A and the NEC 765. These LSI devices are very complex and will only be described very briefly here. The F.D.C. interfaces to the central processing unit like most peripheral devices and makes full use of the interrupt and DMA resources available. The microprocessor is able to issue 15 'high level' commands to the F.D.C. These include read data, write data, format a track, read a track, seek, recalibrate, sense drive status etc. Typical parameters that are included with these commands are the cylinder number (track number), head number, sector number, number of data bytes in a sector, the last sector number on a track, the length of gap 3 etc.

Explanation of two of these commands will illustrate the functioning of the F.D.C.

Firstly the seek command. This command is issued before data is read from or written to a particular track. Although the cylinder number is one of the parameters included in the read or write command, the floppy disk controller does not automatically position the head over the required track. The seek command is therefore necessary to perform this function. When the seek command is issued the requested cylinder (track) number is compared to the value stored in the controller. Step pulses on the STEP line and the required level on the DIR line are asserted to position the head over the required track.

When a write command is issued, the F.D.C. begins to read the data passing the read/write head. This continues until the required sector I.D. field i.e. the sector I.D. field containing the required sector number is found. As is shown in Figure A2 in Appendix A the synchronisation 00's are re-written followed by the data for the sector as well as the first byte of

the next gap. These synchronisation bytes are rewritten each time a sector is rewritten so that when the sector is read, the floppy disk controller is properly synchronised with the incoming data field by the time the data field is encountered.

APPENDIX D DATA RECORDING TECHNIQUES

The recording technique used on a floppy - disk has to be such that it is capable of conveying data as well as clock information. The method used in double density recording as used on the P.C.'s under consideration is called MFM (Modified FM). FM is the technique used in single density recording systems. The FM technique will be described first and then the modifications will be discussed.

Each data bit can be considered to have a 'bit cell' associated with it. In the FM technique, a pulse is **always** present at the beginning of each bit cell (except for markers See later). This conveys the clock which is used by the floppy - disk controller circuitry to synchronise itself so that the data can be read correctly. If the data bit associated with a bit cell is a 1, another pulse is present in the middle of the bit cell i.e. there are two pulses in the bit cell. A 0 is therefore identified by the absence of a pulse in the middle of the bit cell.
In the MFM technique, the pulse at the beginning of the bit cell NEED NOT be present. The data bits are, as above, indicated by the presence or absence at the middle of the bit cell for a 1 or 0 bit respectively. When a 1 is followed by two or more 0 bits, the clock pulses at the start of the bit cell are re - inserted. This is necessary to maintain synchronisation.

If we consider a bit cell size of 4µs as encountered on the standard 5¼ inch floppy - disk interface, we can see the waveform structure after encoding in Figure D1. As can be seen, 3 fundamental time pacings between pulses become ev. ent. 4µs gaps are present between consecutive 1 bits and between 0 bits after the second 0 bit 6µs gaps occur when there are 01 or 10 bit combinations except for the case of 101 where the gap is 8µs.

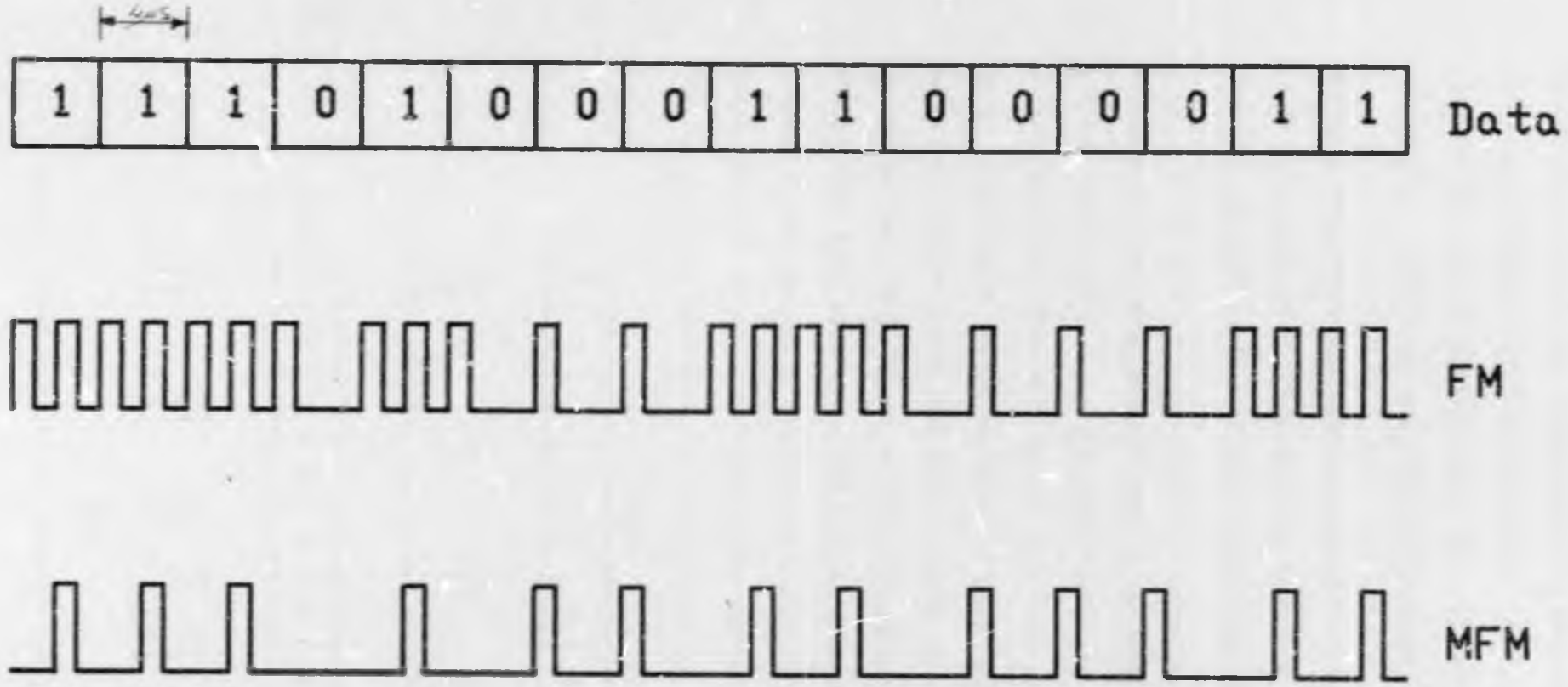

Figure D.1 Diagram Illustrating FM And MFM Encoding

The difference between single and double density is clearly evident in the figure The bit cell in the single density case is twice the size of that in the double density name. The data per second ratio is therefore 2:1 between the two systems, hence the names.

Markers NOTE: This explanation applies to the double density technique. As we have seen, each track and each sector of each track has to have some form of identification. These identifiers require the generation of unique clock and data sequences to distinguish them from user data. A sequence of regularly encoded data bytes cannot be used for these identifiers since there is no guarantee that this data sequence may not occur in the user data. The user should also have no restriction on his data. To generate these unique markers, a clock bit is omitted. The modified bytes used in the index and address marks are $C2_H$ and $A1_H$ respectively. As can be seen from Figure D2 these bytes consist of an active data bit followed by four zero bits. This would result normally in pulses being present at the start of three consecutive bit cells (for the 3 zeros). The middle bit pulse is omitted (shown dotted) to make the byte unique. This is the only case where an 8µs gap occurs between 0 bits.

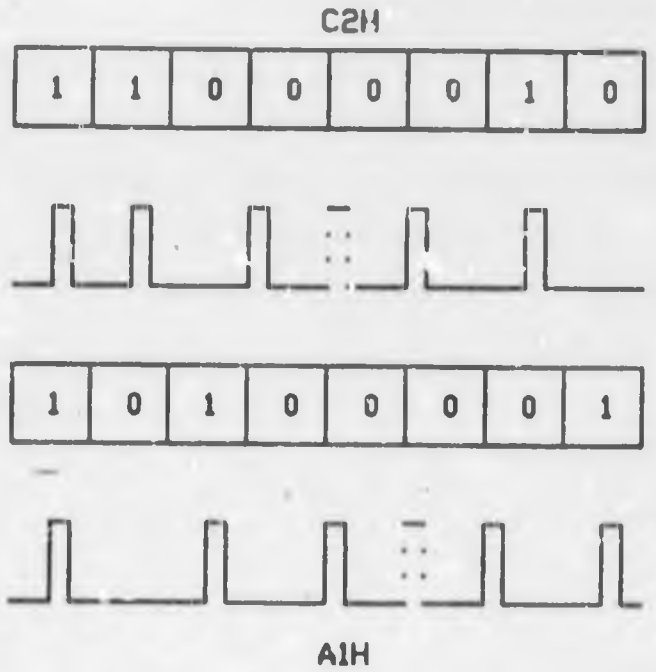

Figure D.2 Encoding Of The Address And I.D. Address Markers

Write Precompensation Peak shifting i.e. shifting of the position of the data pulses recorded on the disks is a characteristic of magnetic disks that results from interference of adjacent bit flux reversals which cause a flux reversal to be read slightly befcre or after its nominal time. Critical bit patterns are 011, 1000, 110 and 0001. If, for example, we consider the pattern 1101' the gap between the first two 1's is 4&mu,s, the second two i.e. 101 is 8µs and the last two 4µs. The data pulses corresponding to the 1's on either side of the 0 appear to migrate towards each other thus reducing the 8µs gap. By writing the first of these pulses earlier than normal and the second later than normal, they appear to be in their correct positions when they are read. These early and late writes are performed by shifting the position of the data pulses 250ns either way of their nominal positions.

APPENDIX E THE DECODER CIRCUITRY

The function of this circuit is to take the data waveform WD i.e. write data, which would conventionally be written to the floppy disk, and retrieve the data and present it in a similar form to that which would be encountered on a synchronous communications link, in this case NRZ coding. It should be recalled that over and above the MFM encoding of the data, the wave-form has write pre-compensation incorporated as well. The decoder must also be capable of removing this compensation.

The circuit operates essentially according to the following principles:- The data waveform is 'sampled' to detect the data pulses being written to the floppy disk. These pulses are used to reset a counter circuit which obtains a certain count value in effect measuring the time between the pulses. The counter value is stored before the counter is reset. The counter value that has been stored is then, in effect, quantised thereby producing an active signal corresponding to one of the three possible nominal bit spacings i.e. 4, 6 or 8us. This together with the previous data bit is used to calculate the present data bit. Clock information is also generated from the incoming data stream. The NRZ data stream is reversed on a byte by byte basis (See reason later) after being input to the Z8530 SCC (Synchronous Communications Controller) which performs serial to parallel conversion. The remainder of the circuitry is to cater for 'special case conditions' which generally occur at the beginning of the data stream.

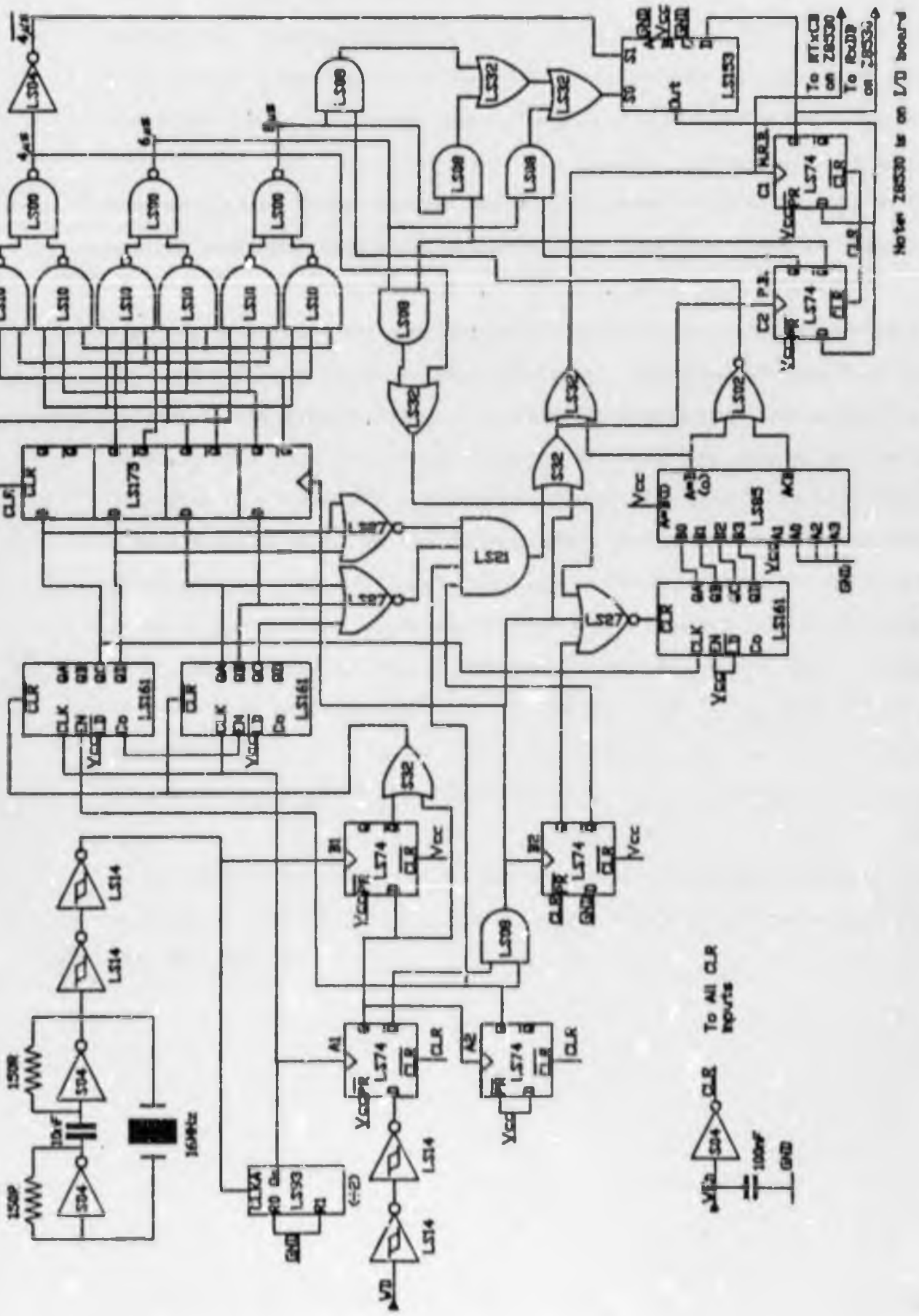

Figure E.1 The Decoder Circuit Diagram

Implementation details See Figure E1. The inputs to the circuit are the WD (Write Data) and WEn (Write Enable). These signals are obtained from the floppy disk interface after being buffered. A 16 MHz clock is obtained from a simple ring oscillator. The Write Enable (WEn) line is used as a master clear signal to keep the whole decoder circuit in a reset state when data is not being input. The pulses occurring on the Write Data (WD) decoder input are 250ns wide with nominal spacings of 4, 6 or 8µs between pulses. These spacings may vary by about 250ns either way of the nominal positions (Write Pre-compensation). The data input is 'sampled' at 8MHz to ensure detection of the pulses in accordance with the Nyquist sampling criterion. The sampling is performed by the D-type flip-flop A1. Note: The LS74 is positive edge sensitive. The input to this flip-flop is preceded by Schmitt-trigger inverters to ensure that the waveform has an acceptable form before the sampling process. The output of the A1 flip-flop is a 0 when WEn is inactive. The B1 flip-flop is used to provide a narrow reset pulse on the falling edges of the WD pulses to the LS161 pulse spacing counters. This occurs in the following manner:- The D input to B1 is high between pulses which results in a 0 output from the Q* output of B1. When a negative edge occurs, the D input is now a 0. The two inputs to the S32 OR gate are both 0 until the B1 latch is clocked. (Clocking at 16MHz). When this occurs the latch output is set to a 1 thus terminating the reset pulse. See Figure E2.

If the WD line is monitored at the beginning of a write operation, the waveform shown in Figure E3. The beginning of the write operation occurs when WEn goes low.

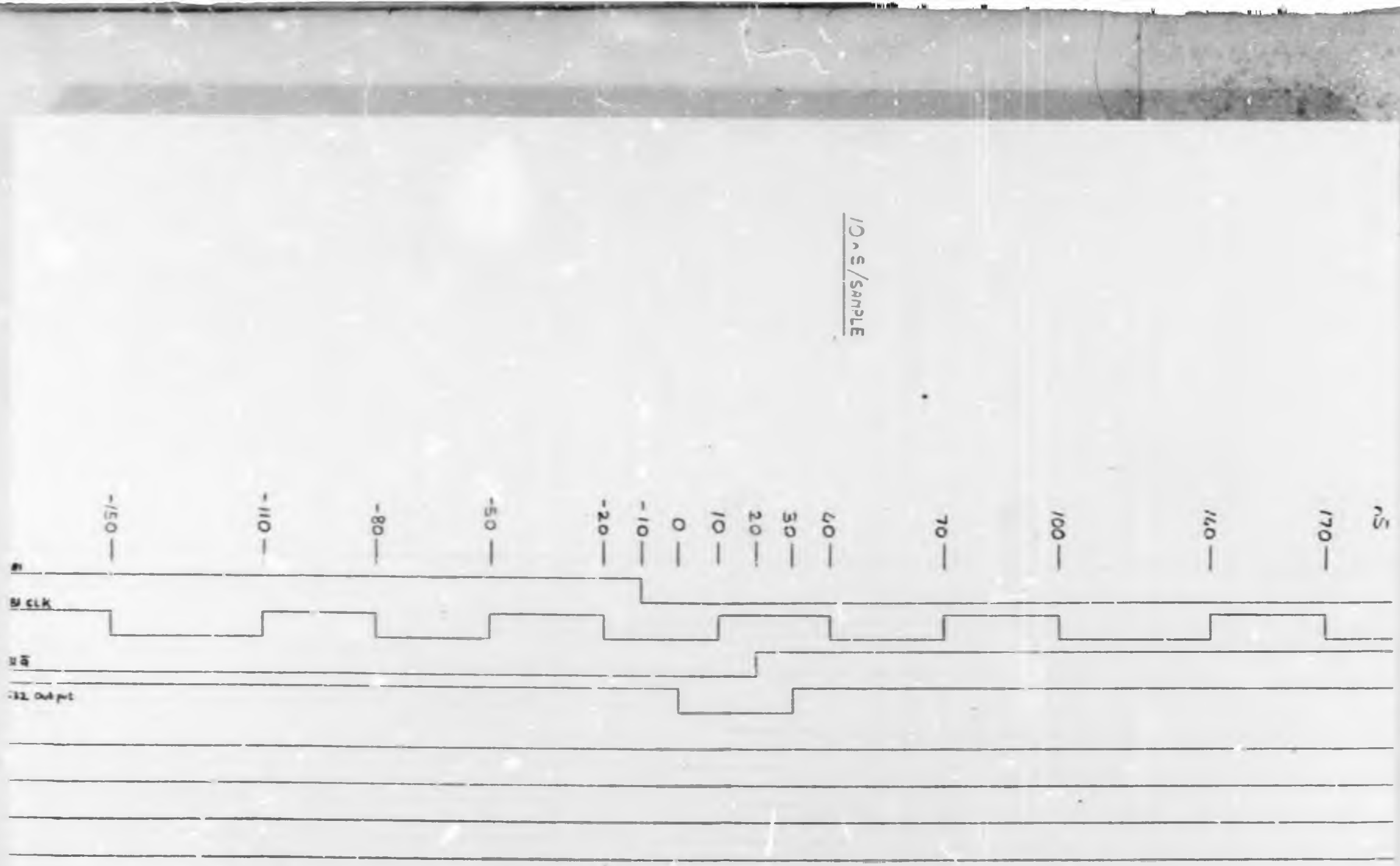

Figure E.2 Timing Diagram Of The Counter Reset Circuit

50n S/sample

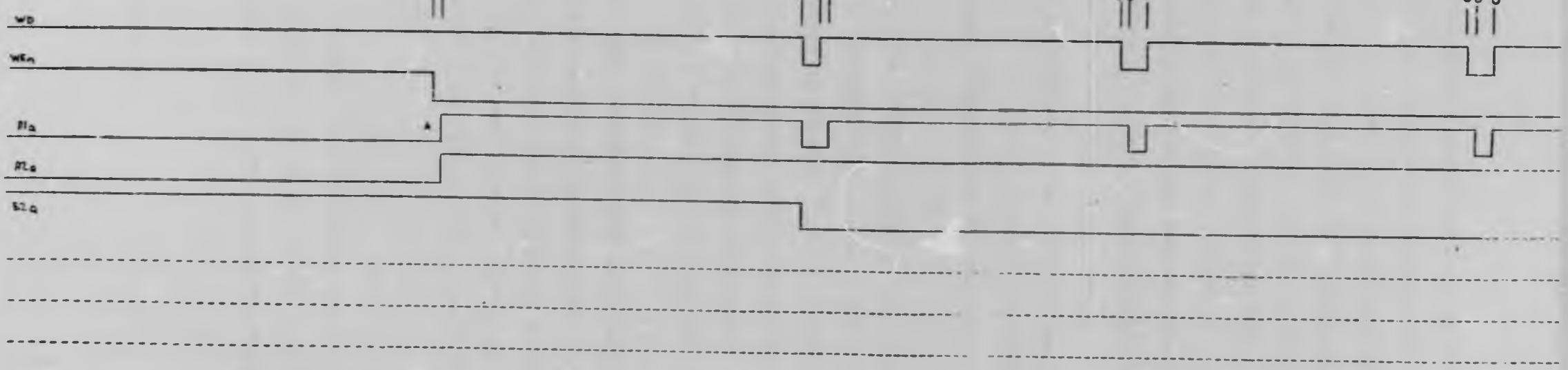

Figure E.3 Timing Diagram Of Write Data At The Start Of A Write Operation

As was described above, the LS161 counters are reset on the falling edges of the sampled WD waveform i.e. The Q output of latch A1. This leads to an unacceptable situation at the start of the WD pulse train. The counters begin to count while the sampled WD remains low. The result is that the first count value latched on the falling edge of the first pulse is too large. The required period is from the first rising edge (pt A in Figure E3) to the falling edge of the first pulse. For this reason flip-flop A2 is included. This is used to disable the counters until a rising edge is encountered in the waveform. The output then keeps the counters enabled until the WEn line is deactivated. Flip-flop B2 keeps the third counter (see function later) in a cleared state and inhibits the pulse expander circuit (see later) until it is clocked. Latch B2 is clocked whenever a pulse occurs on WD and latch A2 has enabled the circuit.

The pulse spacing counters are clocked at 8MHz. The outputs of these counters form the input to two further sections of the circuit viz. the counter latch LS175 and the pulse expander (LS27's and LS21). The latter circuit is used to provide a high output on the LS21 output when all five counter outputs shown in the circuit diagram are all zero. This only occurs when the counter has been cleared (i.e. falling edge of WD). The WD pulses are only 250ns wide. By combining the counter's outputs whose least significant bit changes at 1MHz, and ORing this with the 250ns pulses, a more symmetrical clock is generated for the Z8530 SCC.
The data latch is used to store the counter value while the serial data output is being generated and the next counter value is being generated. The counter value is latched in on the falling edge of WD. i.e. just before the counters ar .ct.

As can be seen from Table 1, count values ranging from 24 to 39 make the 4µs output active while values from 40 to 55 and 56 to 71 make the 6µs and 8µs outputs active respectively. These outputs are obtained by gating

the outputs of the LS175 latch using the LS00's and LS10's. The use of these signals will be described shortly.
Flip-flops C1 and C2 are used to store the 'Most Recent Bit' (M.R.B.) produced by the circuit and the 'Previous Bit' (P.B.) respectively.

The 'previous bit' and the 4, 6 and 8µs pulse width signals are used to control the serial data generator according to the following conditions:-
Note: The 'previous bit' is in brackets. Bold face characters indicate where data pulses are present.

CONDITIONS	DATA	
If 'previous bit' = 1 and 8µs is active	(1)01	(A)
= 0 and 8µs is active	(0)00	(B)

(Note: This second case is an exceptional case and only occurs in markers. See Appendix D on Data Recording Techniques)

If 'previous bit' = 1 and 6µs is active	(1)00	(C)
= 0 and 6µs is active	(0)1	(D)
If 'previous bit' = 1 and 4µs is active	(1)1	(E)
= 0 and 4µs is active	(0)0	(F)

As can be seen from the above, cases A to C require an extra clock pulse to be generated since there are more data bits than pulses from the WD line.

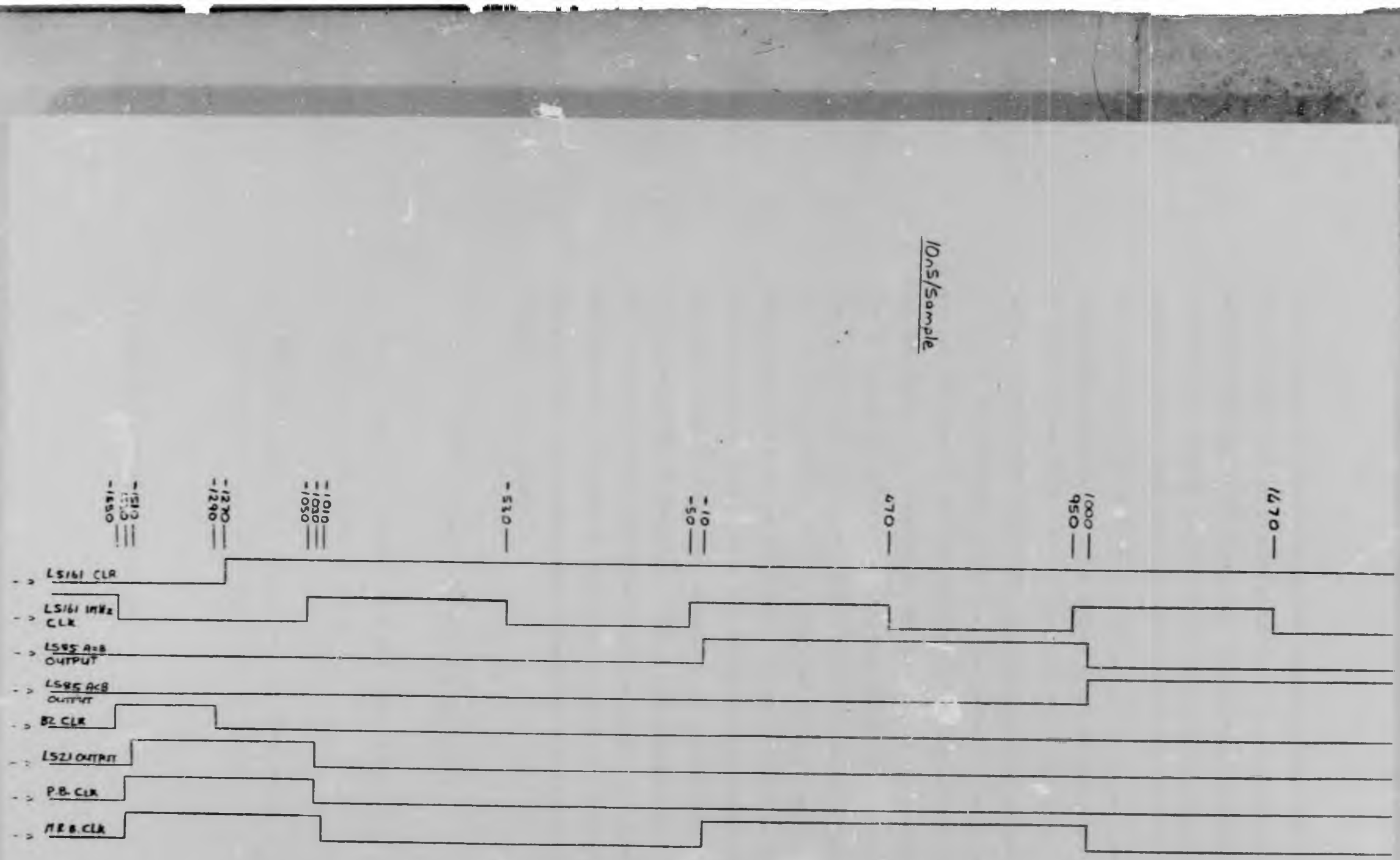

Figure E·4 Timing Diagram Of Clock Pulses Showing Expanded Pulses And Added Clock Pulses

On the output of the MFM decoder we require a clock edge for EACH data bit. To cater for these situations the third LS161 counter is used along with the LS85 magnitude comparator. This counter is cleared by each pulse in WD and the counter is kept in the cleared state when cases D to F are present. These cases are defined by (4µs being active) OR (P.B.=0 AND 6µs is active). In cases A to C this LS161 clocks at 1 MHz. During the second count period, the A = B output is active due to the wiring on the A inputs of the LS85. It is necessary that this output should become active on such a low count value since all possible bit combinations must be able to be processed in 4µs i.e. the shortest inter pulse gap. If this was not the case it may be possible that a new counter value would be latched before the previous one had been completely processed.

The 4, 6 and 8µs pulse width signals, the A < B output of the LS85 and the 'present bit' value are used to drive the select lines of the LS153 (a 1 of 4 multiplexor). This is connected in such a way so as to generate the required data bit on the output. The flip-flop C1 described above is clocked on every clock pulse at the output and thus stores the most recent data bit. The C2 flip-flop, meanwhile, is clocked only when there is a data pulse on the WD line. (i.e. stores the present bit).

The derivation of the next data bit in the serial data generator may have been done using fundamental gating but the use of a multiplexor made the design easier. The requirements of the circuit are shown below. The following should be noted:-

1. The 4, 6 and 8µs signals are mutually exclusive.

2. The 'Present Bit' differs from the 'Most Recent Bit' only when an additional clock pulse is added.

3. $\overline{(A=B)+(A<B)}$ gives a 0 output when the clock pulse is generated and stays in this state until the counter is reset.

(A=B)+(A<B)	P.B.	4µs	6µs	8µs	Required output.
0	0	0	0	1	0
0	1	0	0	1	1
1	0	0	0	1	0
1	1	0	0	1	0
0	0	0	1	0	Doesn't occur
0	1	0	1	0	0
1	0	0	1	0	Doesn't occur
1	1	0	1	0	0
0	0	1	0	0	Doesn't occur
0	1	1	0	0	Doesn't occur
1	0	1	0	0	M.R.B. (=P.B.)
1	1	1	0	0	M.R.B. (=P.B.)

The 4µs line defines a unique requirement and can therefore be connected directly (after inversion) to one of the multiplexor select lines. The other select line is controlled by the following equation:-

S_0 = 8µsoP.B.oX + 8µsoP.B.oX + 8µsoP.B.oX + 6µsoP.B.oX + 6µsoP.B.oX

This can be simplified to

S_0 = 8µsoP.B. + 8µsoX + 6µsoP.B.

Where X = (A=B) + (A<B) The multiplexor inputs on the circuit diagram correspond to the following select inputs:-

S_1	S_0	Input
0	0	D
0	1	C
1	0	B
1	1	A

The data input to the Z8530 SCC is obtained from the output of the M.R.B. latch (C1). The SCC clock consists of the WD pulses that are expanded as well as the additional clock pulses from the LS85. Examples are shown in Figure E4. The SCC is synchronised onto the NRZ data stream using synchronisation characters in the data stream (See Appendix O on Emulation Software). The SCC converts the serial data into parallel form for the microprocessor system. In the I/O circuitry it should be noted that the data is reversed i.e. the most significant bit is made the least significant etc. since the data written to the disk is written most significant

bit first and the SCC expects the least significant bit first. This has more serious ramifications for the Encoder circuitry a ill be explained more fully there.

The MFM decoder performs a vital function in the emulator by converting the write pre-compensated MFM encoded waveform into an NRZ coded waveform suitable for a SCC. Each building block of the decoder is simple in isolation but are combined to perform a complicated task.

TABLE 1:Counter Values

Count	Q_{B2}	Q_{A2}	Q_{D1}	Q_{C1}	Q_{B1}	Q_{A1}	
0	0	0	0	0	0	0	
1	0	0	0	0	0	1	
2	0	0	0	0	1	0	
.	.	.	.	.	.	.	
.	.	.	.	.	.	.	
.	.	.	.	.	.	.	
23	0	1	0	1	1	1	
24	0	1	1	0	0	0	
25	0	1	1	0	0	1	
26	0	1	1	0	1	0	
27	0	1	1	0	1	1	
28	0	1	1	1	0	0	
29	0	1	1	1	0	1	
30	0	1	1	1	1	0	
31	0	1	1	1	1	1	
32	1	0	0	0	0	0	- 4µs
33	1	0	0	0	0	1	
34	1	0	0	0	1	0	
35	1	0	0	0	1	1	
36	1	0	0	1	0	0	
37	1	0	0	1	0	1	
38	1	0	0	1	1	0	
39	1	0	0	1	1	1	
40	1	0	1	0	0	0	
41	1	0	1	0	0	1	
42	1	0	1	0	1	0	
43	1	0	1	0	1	1	
44	1	0	1	1	0	0	
45	1	0	1	1	0	1	
46	1	0	1	1	1	0	
47	1	0	1	1	1	1	
48	1	1	0	0	0	0	-6µs
49	1	1	0	0	0	1	
50	1	1	0	0	1	0	
51	1	1	0	0	1	1	
52	1	1	0	1	0	0	
53	1	1	0	1	0	1	
54	1	1	0	1	1	0	
55	1	1	0	1	1	1	
56	1	1	1	0	0	0	
57	1	1	1	0	0	1	
58	1	1	1	0	1	0	
59	1	1	1	0	1	1	
60	1	1	1	1	0	0	
61	1	1	1	1	0	1	
62	1	1	1	1	1	0	
63	1	1	1	1	1	1	
64	0	0	0	0	0	0	-8µs
65	0	0	0	0	0	1	
66	0	0	0	0	1	0	
67	0	0	0	0	1	1	
68	0	0	0	1	0	0	
69	0	0	0	1	0	1	
70	0	0	0	1	1	0	
71	0	0	0	1	1	1	
72	0	0	1	0	0	0	

The following gating is required to get these signals--

Note The Q's have been dropped.

$$4\mu s = D1 \bullet A2 \bullet \overline{B2} + \overline{D1} \bullet \overline{A2} \bullet B2$$

$$6\mu s = D1 \bullet \overline{A2} \bullet B2 + \overline{D1} \bullet A2 \bullet B2$$

$$8\mu s = D1 \bullet A2 \bullet B2 + \overline{D1} \bullet \overline{A2} \bullet \overline{B2}$$

These are implemented as:-

$$4\mu s = \overline{D1 \bullet A2 \bullet \overline{B2}} \bullet \overline{\overline{D1} \bullet \overline{A2} \bullet B2}$$

$$6\mu s = \overline{D1 \bullet \overline{A2} \bullet B2} \bullet \overline{\overline{D1} \bullet A2 \bullet B2}$$

$$8\mu s = \overline{D1 \bullet A2 \bullet B2} \bullet \overline{\overline{D1} \bullet \overline{A2} \bullet \overline{B2}}$$

APPENDIX F THE ENCODER CIRCUITRY

The encoder circuitry is required to perform the process of providing data in such a form to the floppy disk interface of the computer so that it appears to be receiving this data from the disk itself. As the problem is examined more closely we can see that this requires extensive designing in both the hardware and software fields since they have a very close association.

Requirements It must be remembered that following the initial formatting of a disk for use, the floppy disk controller expects to find all the data recorded during formatting on subsequent disk read operations. For this reason ALL the data, i.e. including that between sectors needs to be emulated. The waveform present on the read data line from the disk-drive to the floppy disk controller was examined using a logic analyser to ascertain the exact characteristics of the wave-form. If this wave form could be reproduced as accurately as possible, the floppy disk controller must surely be convinced that it was in fact receiving the data from a disk and thus function as required.

Implementation The wave form consists of an MFM encoded data stream. The pulse width was measured at 1 µs with nominal pulse spacing of 4, 6 and 8 µs when measured from the beginning of one pulse to the beginning of the next. The voltage levels encountered were typical TTL levels as expected. The data bytes are received MOST significant bit first. On the 5 1/4 inch disk drives as presently found on the IBM PC type computers, the average bit rate is 250 kbits per second.

A Serial Communications Controller (SCC) is used to provide a number of fundamental functions viz. parallel to serial conversion and CRC calculation. An important fact must be emphasised at this stage. In a typical data communication system using this or similar devices, the data is

transmitted LEAST significant bit first. It is immediately evident that this is in direct conflict with what was stated above. As shown in the circuit for the I/O devices (See Appendix H) it is possible to reverse the data being sent or read from the SCC. The CRC on the data that is written by the Floppy Disk Controller is calculated on the data most significant bit first. The SCC performs the calculation on the least significant bit first. The data must be reversed BEFORE the CRC calculation.

At this stage we may assume that we have a serial data stream using NRZ encoding but with the most significant bit of the byte transmitted first. This signal then just has to be encoded in the MFM format. The principal behind the encoder used here is the following:- Each bit can be considered to have a 'bit cell'. In this case the length of this bit cell is 4 µs since the bit rate is 250k bits/s. In each bit cell there may be a pulse of 1 µs duration that may occur either at the beginning or the middle of the bit cell i.e. either during the first or the third microsecond of the bit cell. See Figure F1.

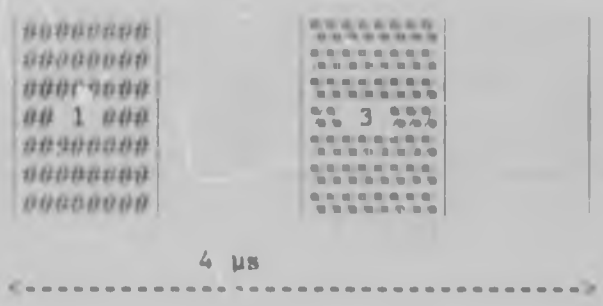

Figure F1: Bit Cell Structure. Pulses May Occur During The First Or Third µs.

A counter circuit is used to provide one µs pulses at both the first and third µs points. Using the values of the present and of the previous bits, these pulses are gated thus producing the required 4, 6 and 8 µs pulse spacing according to the MFM encoding technique. This then takes care of

the encoding of most of the data. The only other encoding that is required is that of address markers. It should be recalled that the address markers (C2H - Index address mark and A1H I.D. address mark) consist of one active data bit followed by four zero bits. See Figure F2. As can be seen from the figure, the four zero bits in the markers generate three pulses at the start of three consecutive bit cells. The markers are identified by leaving the middle of these three pulses out. The circuit used generates the three pulses as would be the case for a normal data byte but the second of the three is suppressed. Therefore all the encoding requirements are met.

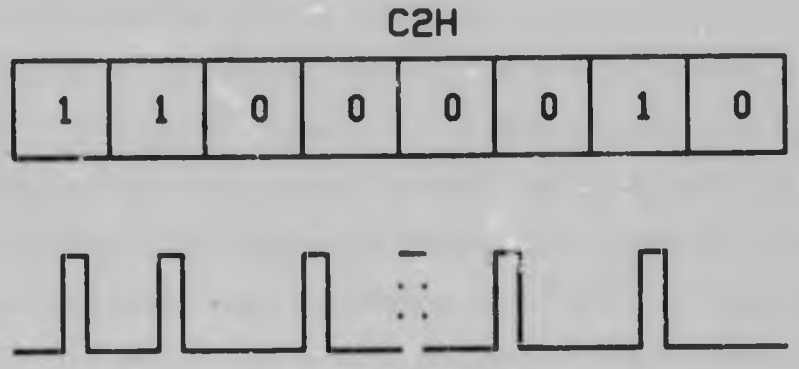

Figure F.2 Encoding Of The Address And I.D. Address Markers

Detailed Description of Encoder Circuit Operation See Figure F4. A 2 MHz symmetrical clock is derived from the 8MHz CPU clock and is used to drive the LS161 synchronous counter. The counter is permanently enabled but has its clear input controlled by the inverted RTS line from the SCC. This is used to keep the output of the counter zero when required. The RTS line is also used to keep the other flip-flops in a cleared or preset state as required. The outputs of the counter provide clocks at 1MHz, 500kHz and 250kHz. The 250kHz is used to provide the fundamental data rate while the other two are used in the encoding process. The output waveforms of the counter are shown in Figure F3.

The data is clocked out of the Z8530 (SCC) on the falling edge of the 250kHz clock which is latched into the LS74 data latches by the rising edge of the 'latch load' signal. This signal is obtained by ANDing the 250kHz, 1MHz and inverted 500kHz signals. The 'start cell' and 'mid-cell' signals are produced by ANDing the 500kHz signal with the inverted 250kHz signal and the 250kHz signal respectively. Gating of these two signals according to the serial bit stream provides a simple method to perform the MFM encoding.

Consider the following bit patterns:-

Note:- Qi denotes the present and Q(i-1) denotes the previous bit

a. Qi = 0 and Q(i-1) = 0 , the 'start cell' signal is allowed through since the output of the NOR gate is a 1.

b. Qi = 1 and Q(i-1) = 0 , the 'mid-cell' signal is allowed through since the NOR output is now a 0.

c. Qi = 0 and Q(i-1) = 1 , in this case neither the 'mid-cell' or the 'start cell' signals is allowed through since the Qi output is zero thus disabling the 'mid-cell' signal and the NOR output is zero, thus disabling the 'start cell' signal.

d. Qi = 1 and Q(i-1) = 1 , here the 'mid-cell' signal is passed through since the Qi output is a 1 and the NOR output is zero.

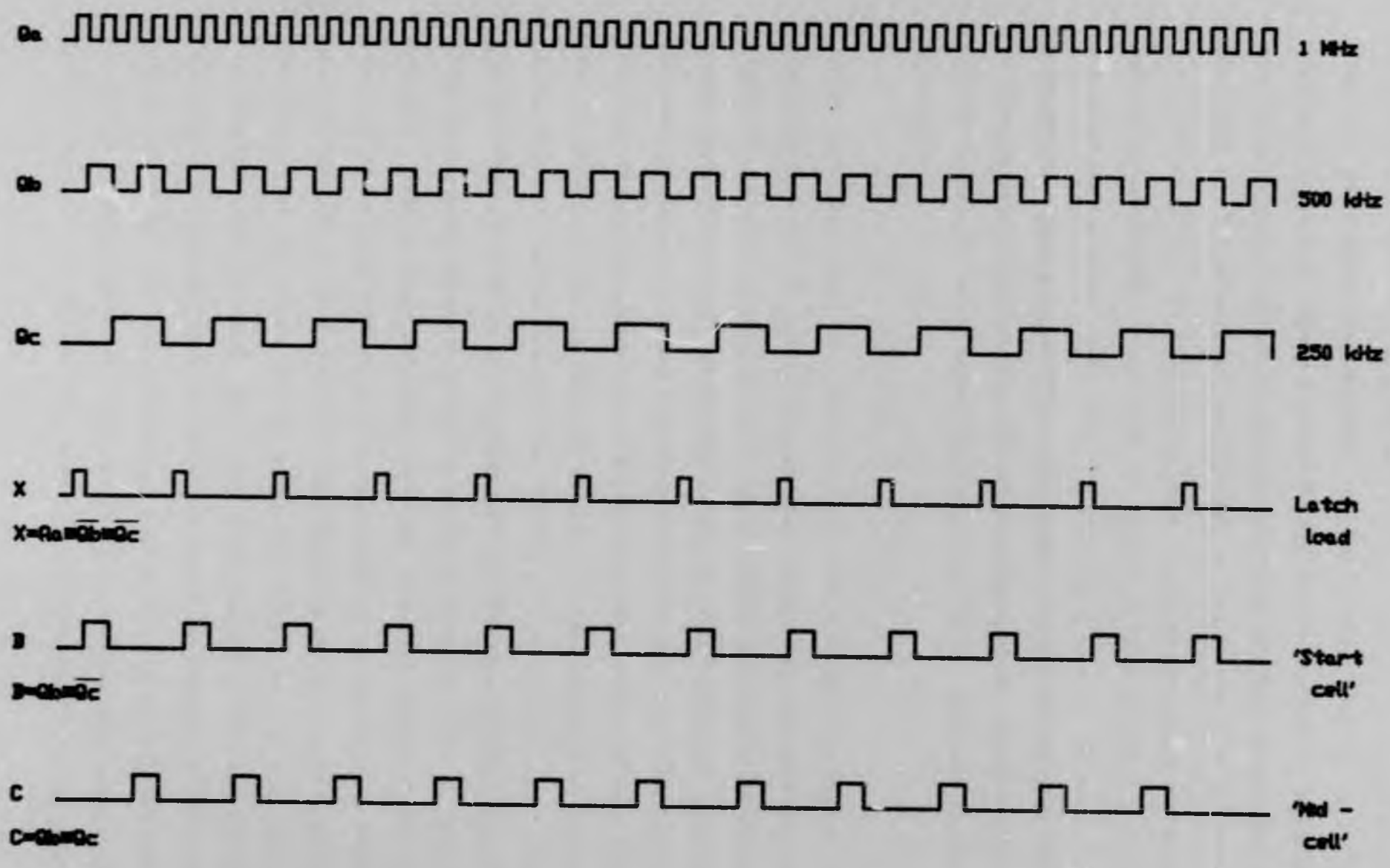

Figure F.3 Counter Output Waveforms

If we consider some three bit, bit sequences the operation may become more clear. If we consider the sequence 101 for example, when Qi is a 1 the 'mid-cell' signal is always allowed through as can be seen from cases b and d above, thus a pulse in the middle of the bit cell is present for the first 1. In the next bit period then we have Q(i-1) = 1 and Qi = 0 i.e. case c above. No pulse is allowed at either the start of the bit cell or in the middle. In the next bit period we have Q(i-1) = 0 and Qi = 1 i.e. case b above. Here only the mid cell pulse is allowed. If we consider the spacing between the pulses, we can see that the required 8 µs spacing is present between the two mid cell pulses. Using a similar process it can be easily shown that the 6 and 4 µs gaps are produced correctly.

As was described above the generation of address markers requires that certain pulses be left out of the encoded stream. As can be seen from Figure F2 the pulses that are left out to identify the bytes as markers always occur at the start of the bit cells. An extra piece of circuitry has been introduced to remove 'start cell' pulses when this is required. The heart of this circuit is the J-K flip-flop. The output of this flip-flop is ANDed with the 'start cell' signal i.e. the signal is suppressed if the flip-flop output is a 0. The flip-flop is held in a preset state i.e. Q=1 when the encoder is disabled (via the DTR line and AND gate) and it is also preset whenever a midcell pulse is produced (i.e. a 1 bit is encoded). This is done to ensure that the flip-flop always allows the required 'start cell' bits to pass through until it is necessary to remove these pulses. The J and K inputs to the flip-flop are both tied high and thus the output toggles on each applied clock. (Negative edge sensitive). What happens then (assuming the 'start cell' stream to be clocking the flip-flop i.e. the AND gate on the clock input by-passed) is that the output, initially 1 and thus allowing passage of the signal, changes state to 0 and thus prevents the next pulse from reaching the output. The falling edge of this pulse does, however, restore the flip-flop output

to the 1 state. It is immediately evident therefore that this flip-flop must only be allowed to operate during address marker generation. This is done via the remaining D-type flip-flop whose output is held at 0 by the DTR line of the Z8530 that controls the clear input of the flip-flop. The output is only allowed to attain the 1 state when it is clocked by a 1 in the data stream from the Z8530. This is advantageous since the DTR line can be set as soon as the address mark data is written to the Z8530 without having to worry about the delays encountered in the encoder circuit. A necessary condition for this to work is that there are no 1 bits in the data stream between the DTR line being asserted and the address mark data arriving at the data latches. This condition is satisfied since the address markers are always preceded by 12 00H bytes. See Appendix A. The J-K flip-flop needs to be reset for each address mark byte since the output would toggle to 0 on the first pulse, toggle to 1 on the second and back to 0 on the third. It must, however be in the 1 state at the start of the next address mark byte. Care must be taken when writing the software that controls the DTR line since this line must remain active until all three address markers have passed through the encoder. The inclusion of the flip-flop chain on the J-K preset line ensures that only three address markers can be generated. The DTR line can be left in the active state longer thus making the software less critical. After the three markers have been generated the flip-flop is forced into the preset state.

The waveform available from the MFM encoder is buffered before being applied to the floppy disk interface. The waveform produced by the circuitry is identical to that obtained from a floppy disk drive unit. All that is required is the software to provide the data expected by the Floppy Disk Controller and to control the SCC control lines. This is described in Appendix P.

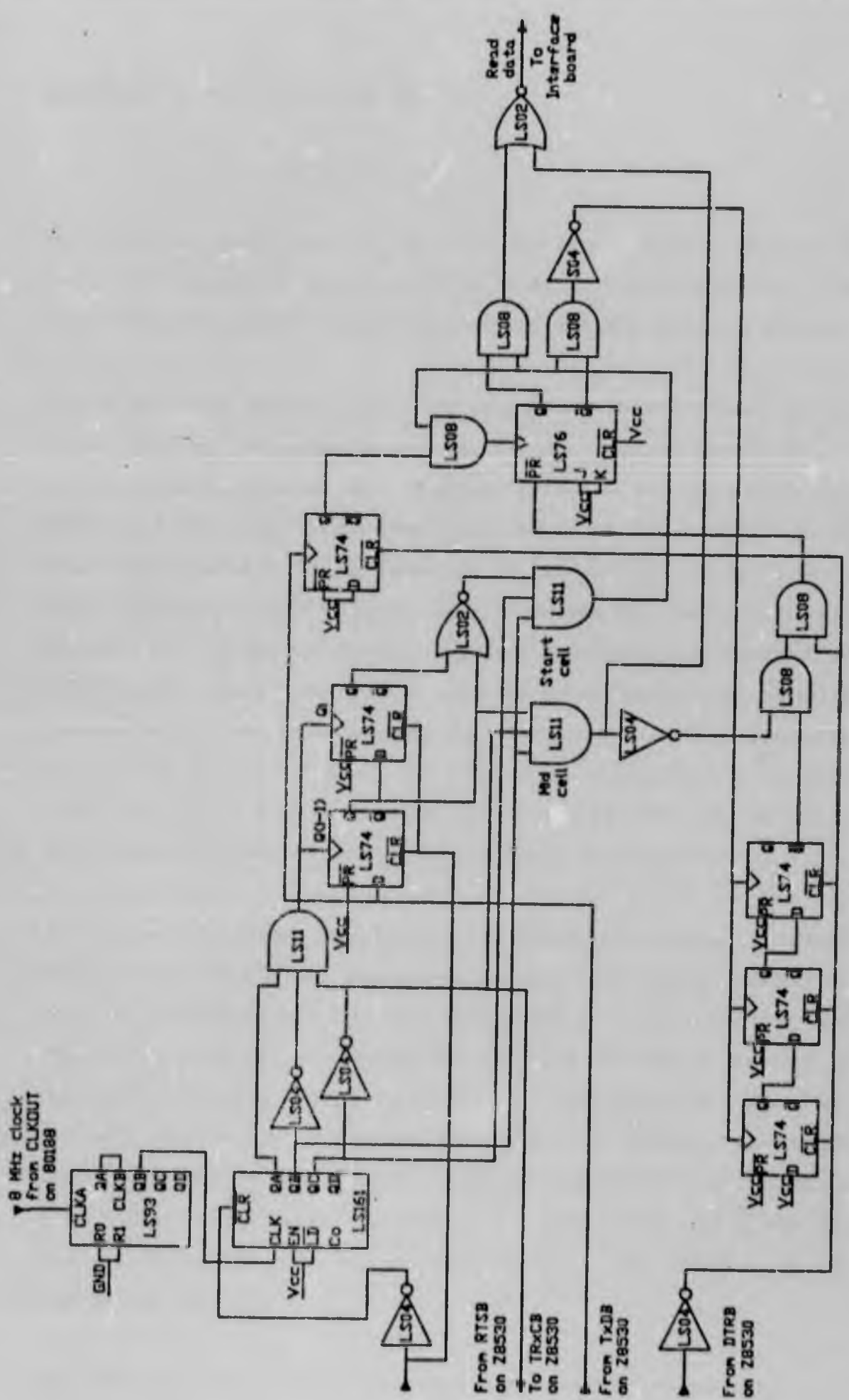

Figure F4 The Encoder Circuit Diagram

APPENDIX G THE INTERFACE BOARD

The interface board contains the input and output buffers required to interface the emulator circuitry to the floppy disk interface cable. The track counter to monitor the head movement is included in this circuitry.

Most of the lines on the interface cable are 'bus' signals except for the select lines for the individual drives. All the lines are however driven by open collector drivers. All the inputs therefore require pull-up resistors and 150Ω resistors are used since this is the value used on normal disk drive units. All the inputs except the select input are buffered by D-type latches. In this way the state of the bus is retained when the emulator is no longer selected. The select line itself is inverted to enable these latches as well as to cause the output NAND drivers to drive the bus. Most of the signals sources and destinations are self explanatory but some are worthy of mention. The Index pulse is generated by software which controls the DTR line of channel A of the Z8530 SCC. The WP signal is permanently disabled by grounding the input. See Figure G1.

The head motion is monitored by an 8 bit up/down counter that is driven by the DIR and STEP lines. Step pulses are generated for each track that is to be traversed. The DIR line determines in which direction the counting takes place i.e. towards the centre or outside of the disk. A low on DIR causes the count value to increase (equivalent to inward head movement). The counter outputs are ORed together to generate the TRACK0 signal which, as its name implies, is active when the counter's value is zero. A simple port allows the counters' outputs to be read by the CPU when the PCS3 and RD lines are low simultaneously. Note:-PCS3 is an I/O chip select line from the 80188 CPU.

This board provides a simple yet critical function in the emulator.

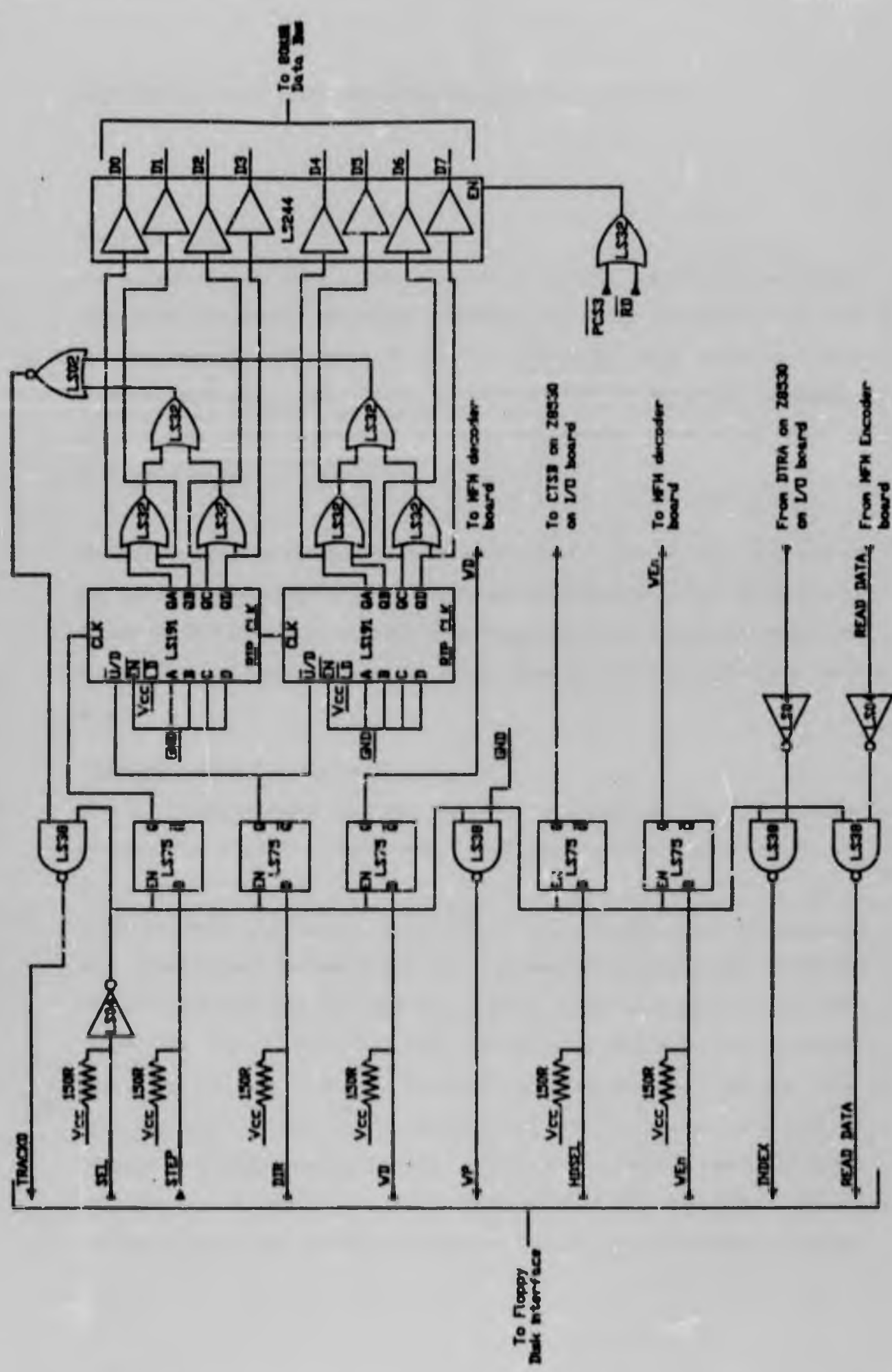

Figure G.1 The Interface Circuit Diagram

APPENDIX H THE MICROPROCESSOR CONTROLLER UNIT

See Figure H1.

The microprocessor unit's functions are to control the network and floppy disk drive emulation. The 80188 microprocessor forms the core of the unit and is supported by 2 Z8530 SCC's, a parallel input port (tri-state buffer), a parallel port (latch) as well as 256K of RAM which is expandable to just under 1 Mbyte in 256Kbyte increments. 8Kbytes of EPROM is also allowed for.

The microprocessor controller unit consists of 3 boards viz. CPU, memory and I/O boards and each will be discussed individually as far as possible. It should be noted however that eventhough the term boards has been used this refers to logical divisions rather than physically separate circuit boards.

The CPU board See Figure H2.

The only requirements for the internal oscillator of the 80188 microprocessor is a 16MHz crystal and 2 20pF capacitors as specified by the manufacturer. The 16MHz crystal provides an 8MHz processor clock and an 8 MHz 50% duty cycle clock on the CLKOUT line. The RES input is connected to a conventional RC reset circuit. The component values are R=1KΩ and C=22μF which keep RES low long enough after power-up to satisfy the reset input requirements. The low to high transition on RES must occur no sooner than 50μs after power-up[4]. The RESET output indicates that the 80188 is being reset internally, is synchronised with the system clock and can be used as a master reset. In this case it is only used to reset the Z8530 SCC. The unused inputs viz. HOLD, SRDY, ARDY, TEST, INT1, NMI, IT2 and IT3 are tied to Vcc or GND depending on their respective inactive states.

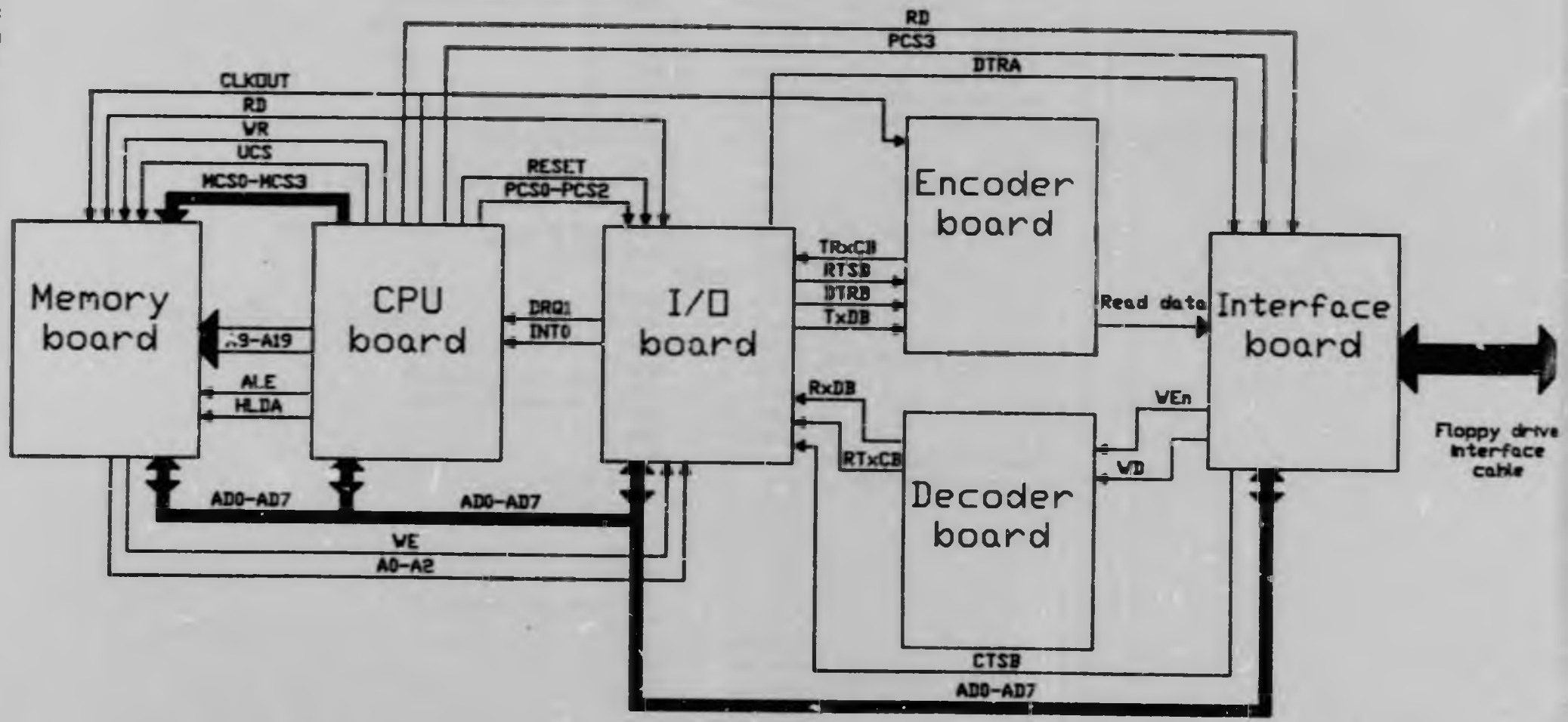

Figure H.1 Block Diagram Of The Floppy Disk Drive Emulator

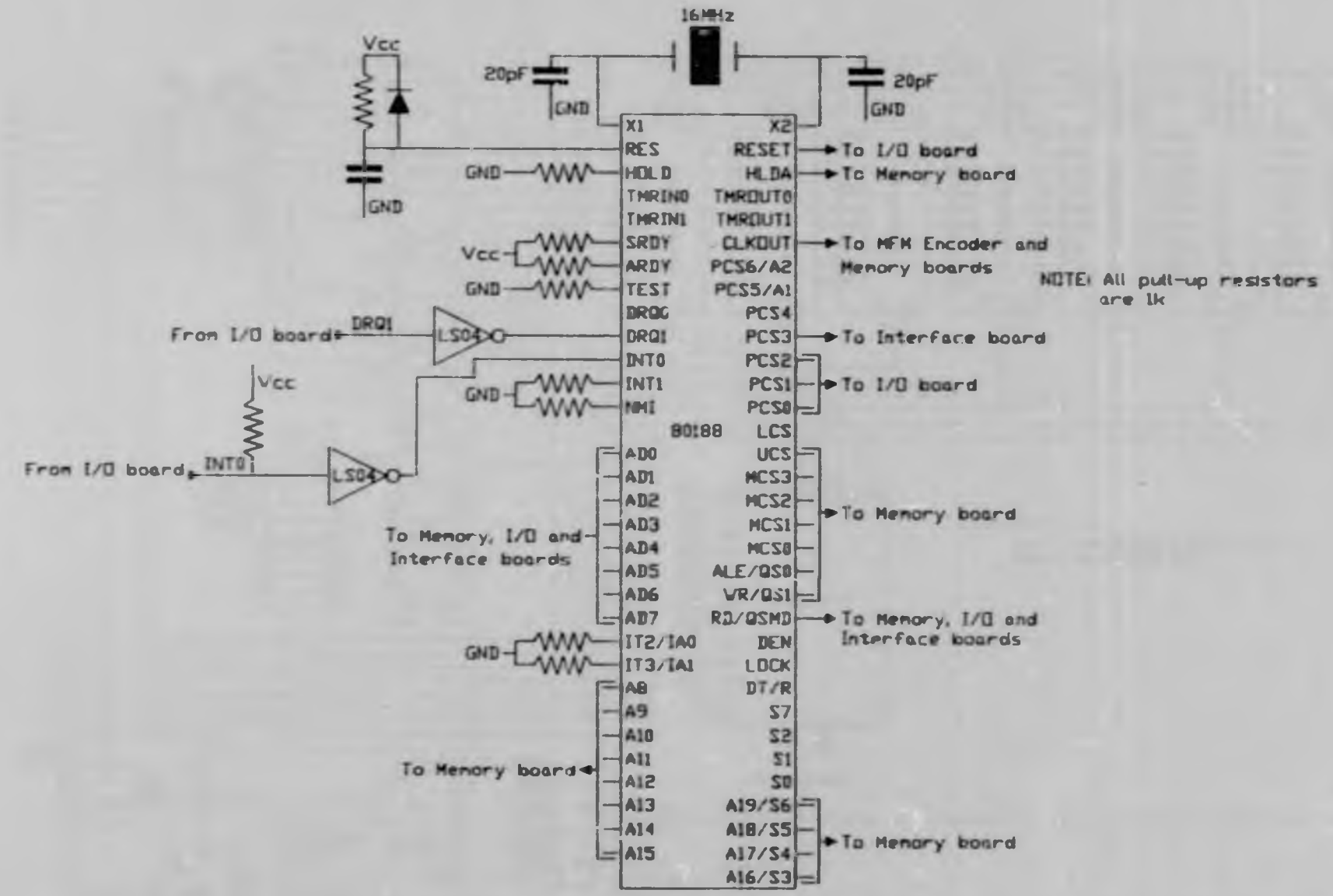

Figure H.2 The 80188 CPU Circuit Diagram

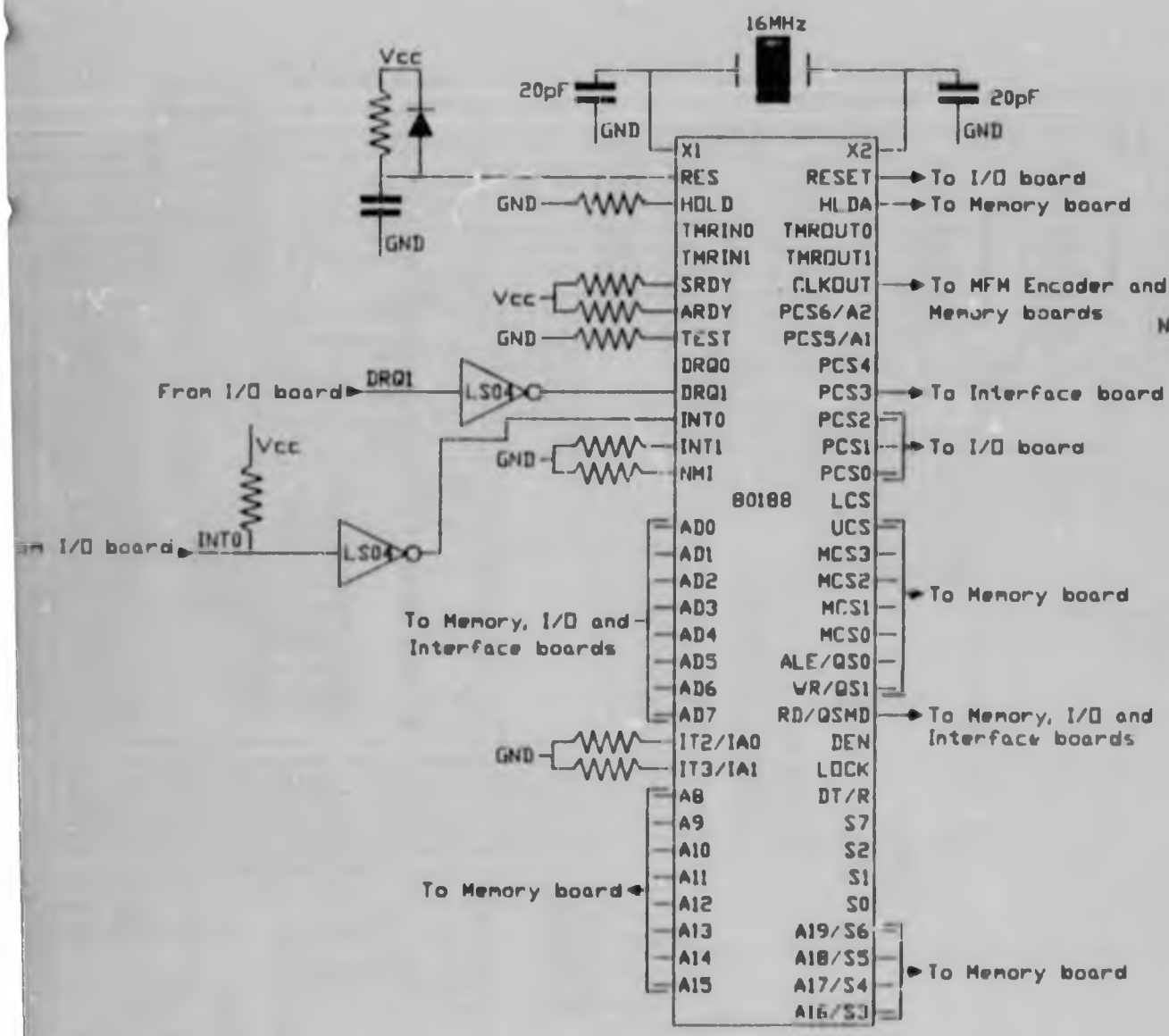

Figure H.2 The 80188 CPU Circuit Diagram

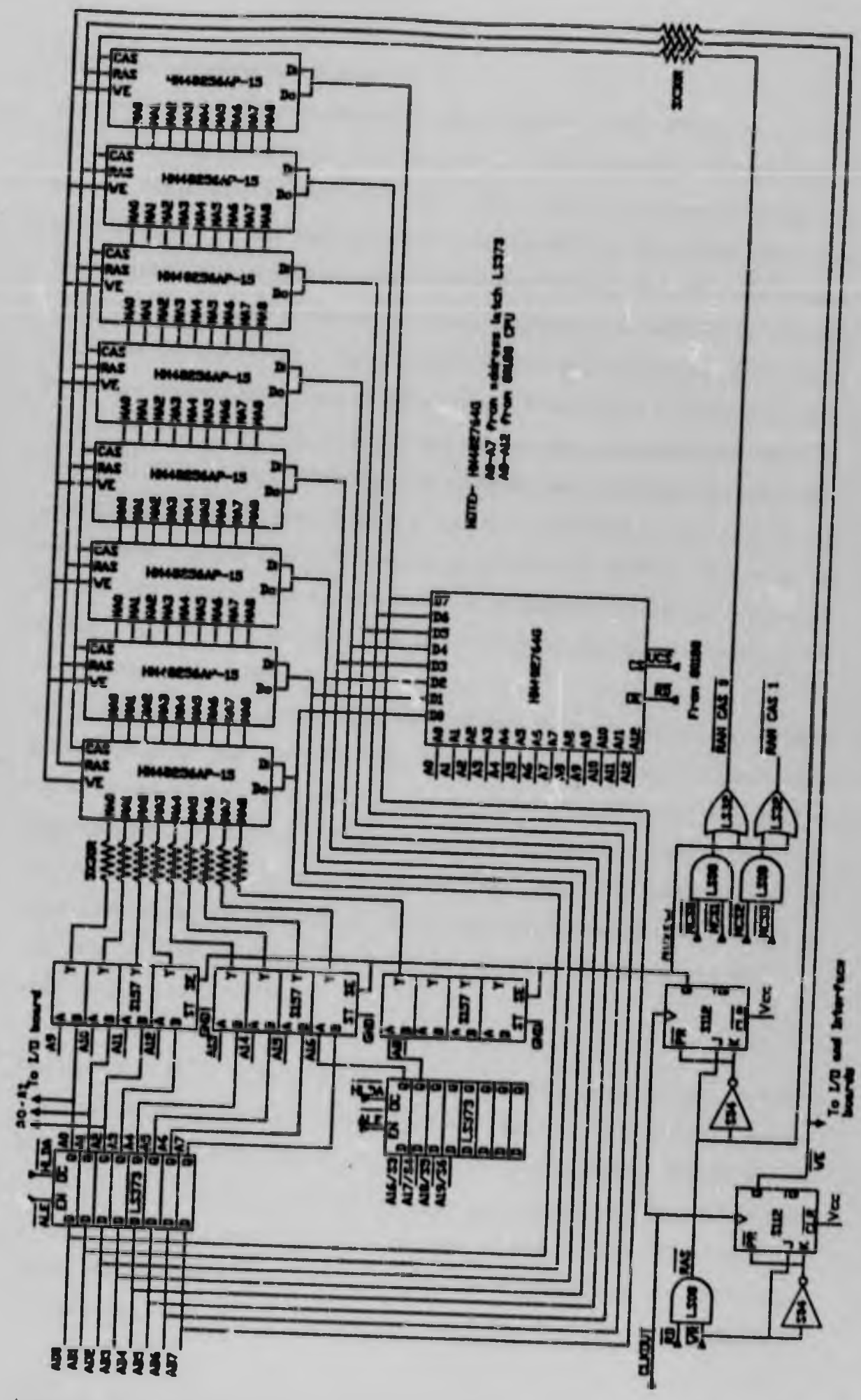

Figure H.3 The Memory Circuit Diagram

The Memory Board See Figure H3.

Note the sources of the address lines on the HN482764G EPROM.

The first requirement for both memory and I/O devices is for the lower address lines A0 - A7 and upper lines A16 - A19 to be de-multiplexed. On the 80188, the former group is multiplexed with the data lines while the latter group is multiplexed with some status lines. This is done simply using two LS373 latches which are enabled by the ALE (Address Latch Enable) line of the 80188. The outputs of the memory mapping unit in the 80188 are programmable thus allowing these lines to be activated at various positions in memory. The memory map of the microprocessor unit is shown in Figure H4. Address lines A0-A2 are provided in their de-multiplexed form for use on the I/O board. The EPROM is located at the top of memory since the reset vector is located at FFFF0H. The position of the UCS (Upper Chip Select) line is programmed to become active at FE000H. EPROMS with access times of up to 250ns can be used with a CPU clock frequency of 8MHz.

It is possible to use four banks of 256K RAM chips to give (1Mbyte-EPROM size)K bytes of RAM. If more than 512K is used, chip select lines have to be generated due to a peculiarity of the 80188. The four MSC (Mid - range Memory Chip Select) lines are used to enable the lower 512K i.e.0 to 512K. The chip select lines for the area above this would have to be generated using UCS and A19 and A18. LCS (Lower Memory Chip Select) is not used in this design. MCS0 and MCS1 select 0 to 256K while MCS2 and MCS3 select 256 to 512K.

The 256K RAM chips have 9 multiplexed row/column address lines. Address lines A0 to A17 are multiplexed to provide the required 9 lines i.e. MA0 of the RAM is switched between A0 and A9 of the processor. The RD and WR lines of the processor are used to generate the RAS signal for the RAM. The RAS line also controls the operation of one of the S112 J-K flip-flops. When RAS is active and the flip-flop is clocked by the CLKOUT line of the 80188, the output changes thus switching the address multiplexor.

The multiplexor should therefore switch at the start of the T3 CPU cycle. See Figure H5. The actual CAS signals applied to the RAM chips is a combination of this multiplexor switching line and the Chip Select lines. Resistors are included on the inputs to the RAM chips in an attempt to keep the voltage overshoots and ringing that can occur to a minimum.
The WE enable inputs of the RAM chips as well as that of the Z8530 require that the data to be written be stable on the data bus before this line is active. The WR line of the 80188 does not satisfy this condition and a WE signal is generated by allowing the output of the S112 J-K flip-flop controlled by WR only to become active on the rising edge of CLKOUT following the activation of the WR line. Again this should correspond to the start of the T3 CPU cycle.

The RAM chips require each row to be refreshed every 4ms Considering that there are 256 rows that require refreshing, and assuming refreshing is done on a regular continuous basis, a refresh cycle is required every 15.625µs. The refreshing is done by programming one of the timers in the 80188 to request a memory DMA cycle. See Appendix O. Each of these cycles refreshes an entire row of the memory.

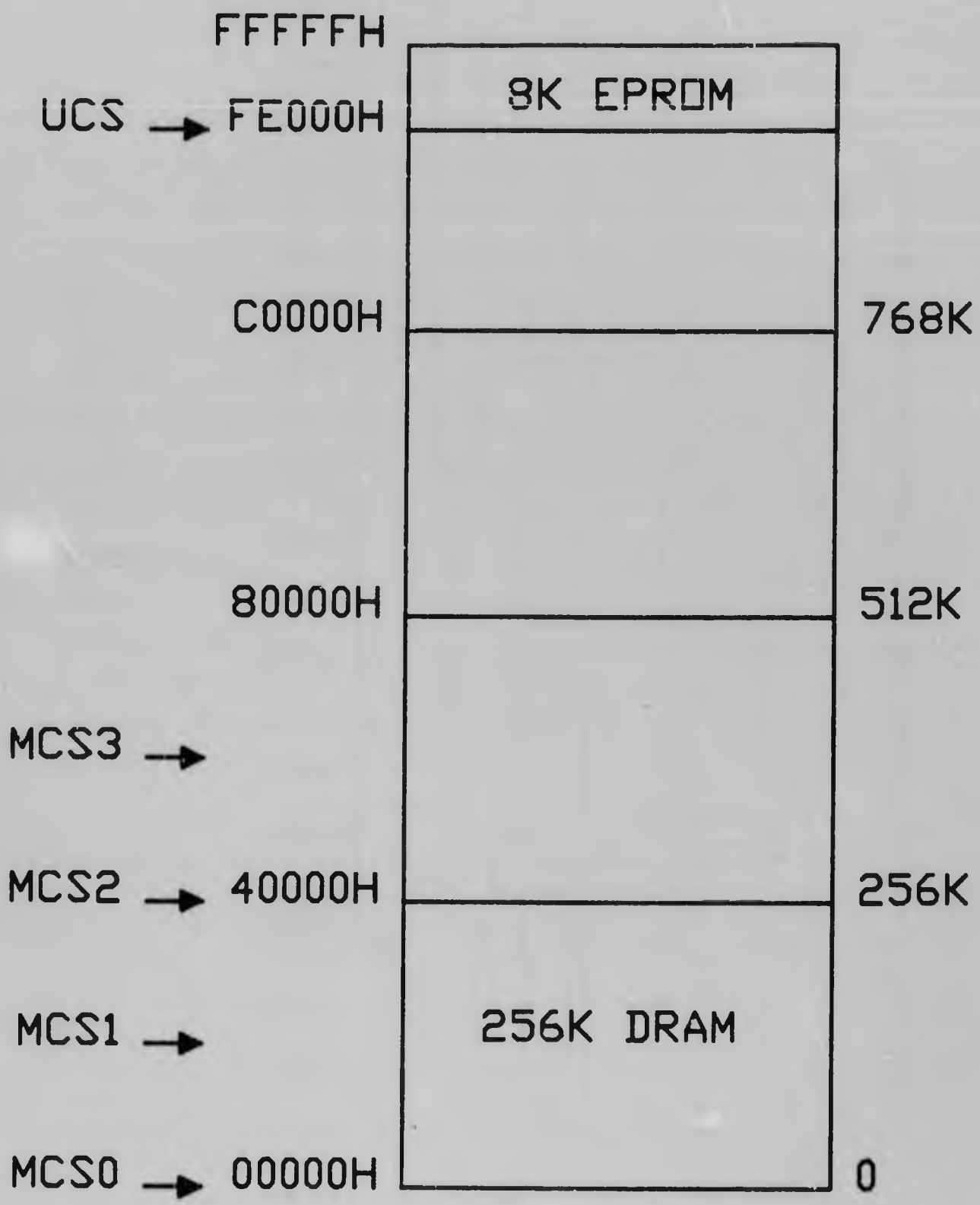

Figure H.4 The Memory Map Of The 80188

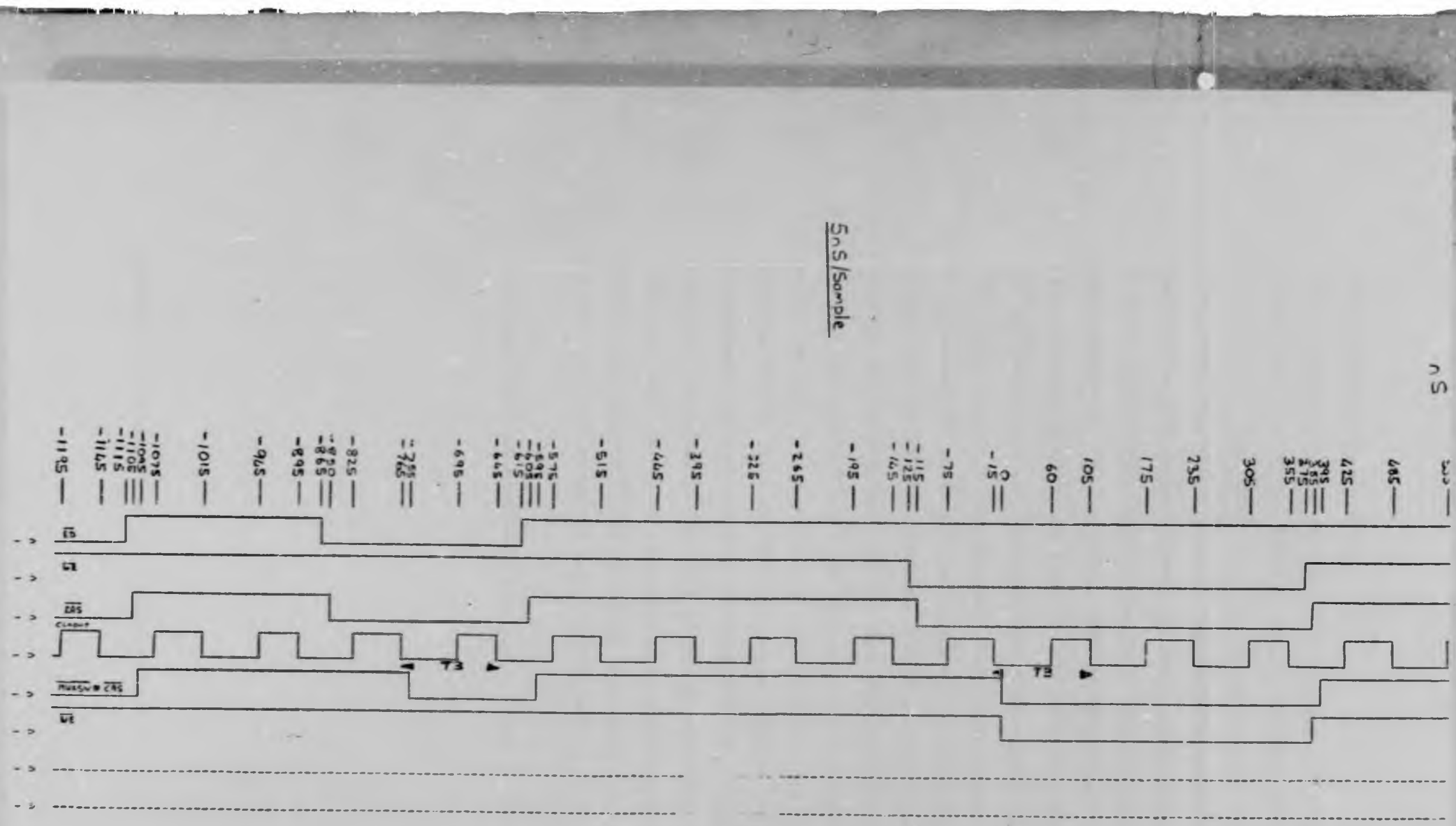

Figure H·5 Timing Diagram Of The RAS, CAS And WE Signals

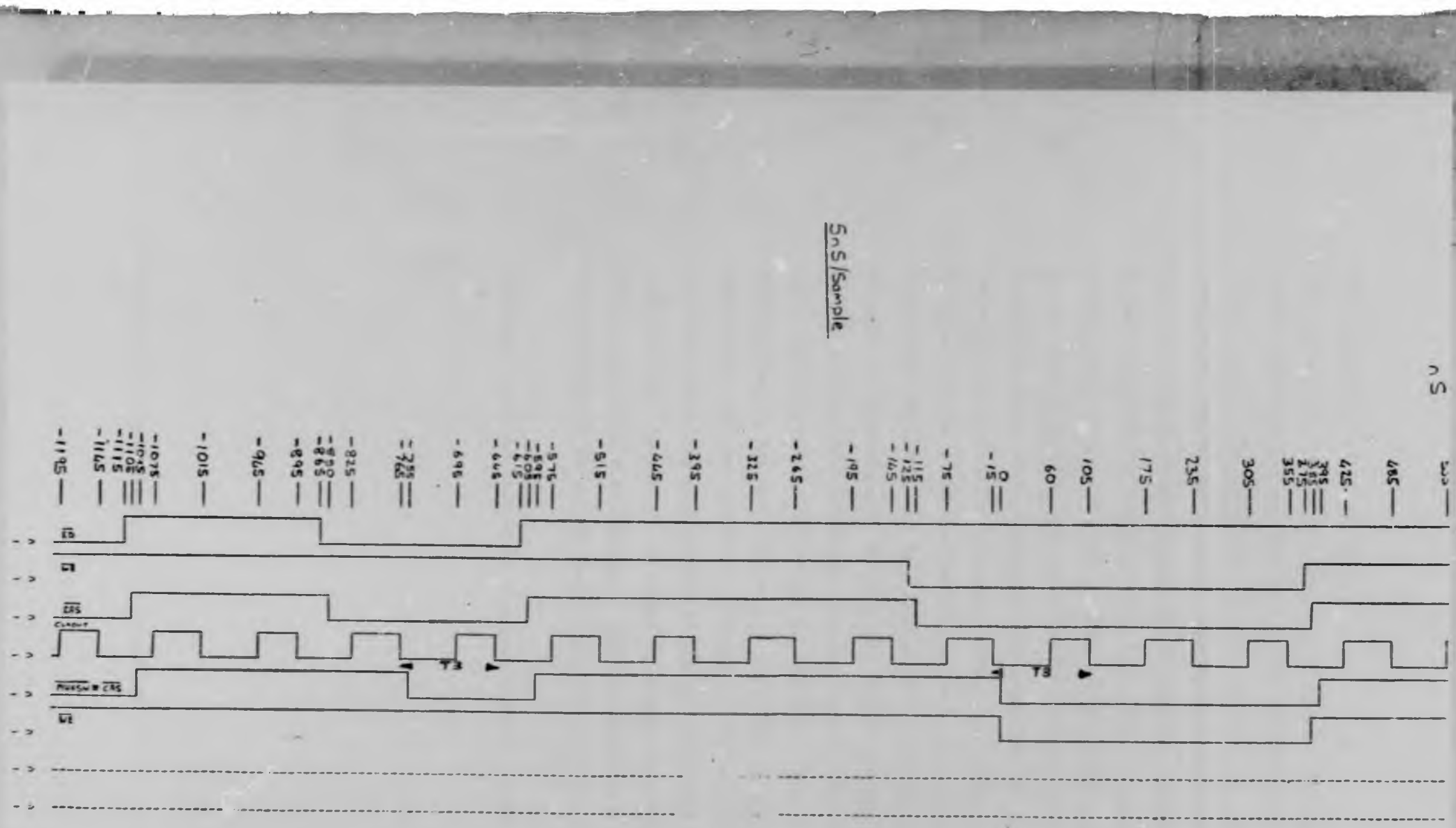

Figure H·5 Timing Diagram Of The RAS, CAS And WE Signals.

The I/O Board See Figure H6.

The organisation of the I/O map is very simple. See Figure H7. The I/O devices used are the two Z8530's , a parallel input port and one parallel output port. The Z8530 used for the emulator is enabled by the PCS0 (Peripheral Chip Select) line 0. Address lines A0 and A1 from the memory board are used to select between the data/control registers and channels A and B respectively. Address line A2 is used to control the circuitry which allows for the reversal of data being written to or read from the Z8530. When A2 is high, the lower data transceiver (LS245) in the figure is enabled which allows unreversed data transmission. As can be seen from the figure when A2 is low the upper transceiver allows the data on line D0 to be applied to D7 etc. Both tranceivers are only enabled when PCS0 is also low. The Z8530 used for the network is enabled using PCS1. No data reversal is required here and the data bus is therefore connected directly. Non-vectored interrupts are also allowed for. The DMA requirements are satisfied by inverting the RDY/REQA line of the Z8530 and applying this to the free DMA request input DRQ1 of the 80188. The clock requirements of the Z8530's are satisfied by a simple buffered ring oscillator operating at 6MHz. The RD and WE (described above) are gated with the RESET output of the 80188 to provide a hardware reset to the Z8530's. The Z8530's do not have a specific RESET input but can be reset by activating the RD and WR inputs simultaneously.

The output latch is enabled by PCS2 and WE being low simultaneously.

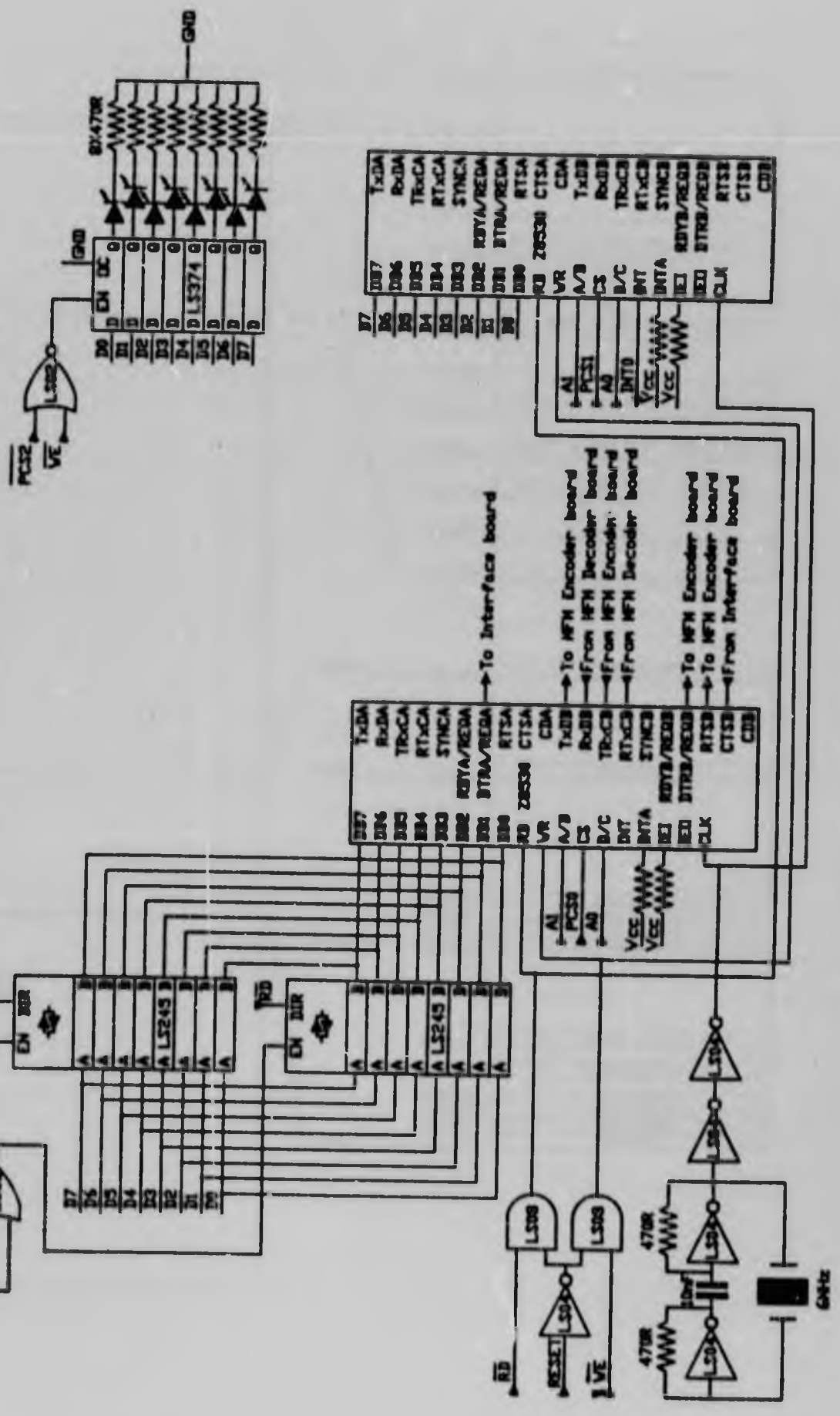

Figure H.6 The I/O Circuit Diagram

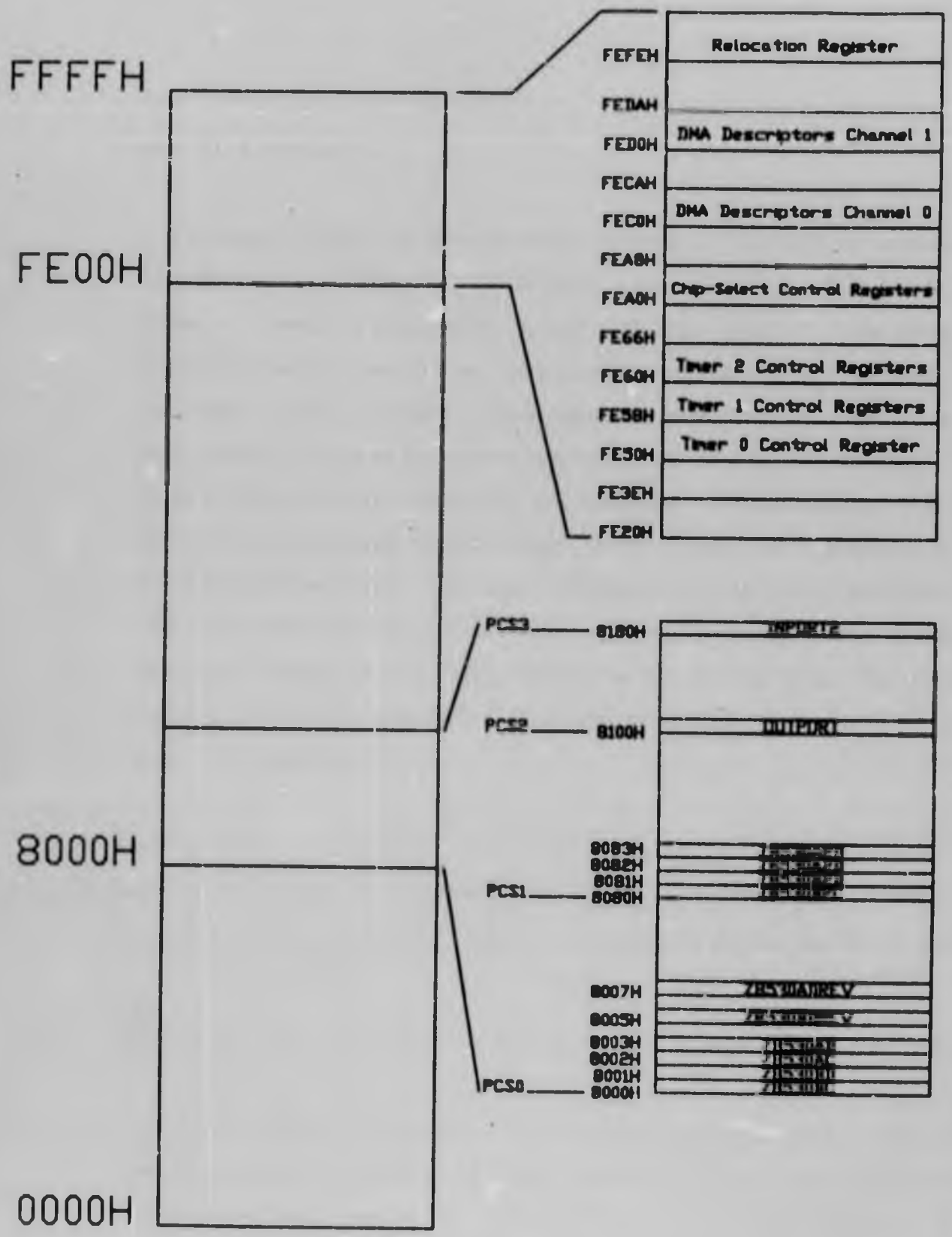

Figure H.7 The I/O Map

APPENDIX I THE TRACK CACHE

The implementation of the track cache and the cache replacement algorithm will be described.

The smallest 'block' of data that can be uniquely defined by the emulator is a particular track on a particular side of a disk. This block then forms the basis of the cache. Along with this each of these blocks is associated with a particular application program. As has already been described, each of these blocks requires some form of identification. Each block is defined by a track number, side number and an application number. Various other variables are required for the caching algorithm and will be discussed shortly. Each block of data is 4.5Kbytes. In the present implementation just under 192Kbytes of memory are available for the cache. This is therefore sufficient memory space for 42 blocks of data. The layout of the cache could take one of two forms. The first of which is similar to the layout on a disk viz. header, data, header, data etc. See Figure I1.

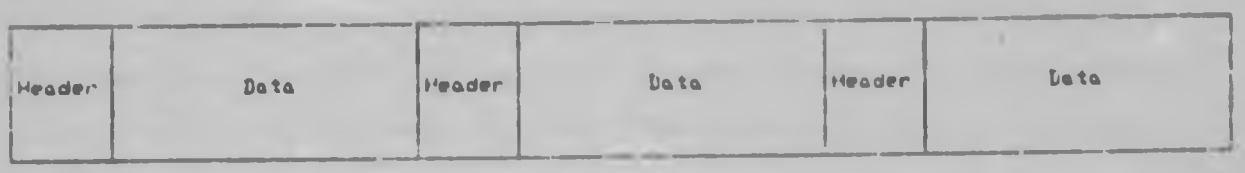

Figure I1 Cache Implementation With Each Data Segment Preceded By A Header

The header would contain the identification mentioned above. The second method consists of an area of memory dedicated to an 'index' and another area of memory dedicated to the data. The index includes a pointer to the data area corresponding to each entry. See Figure I2.

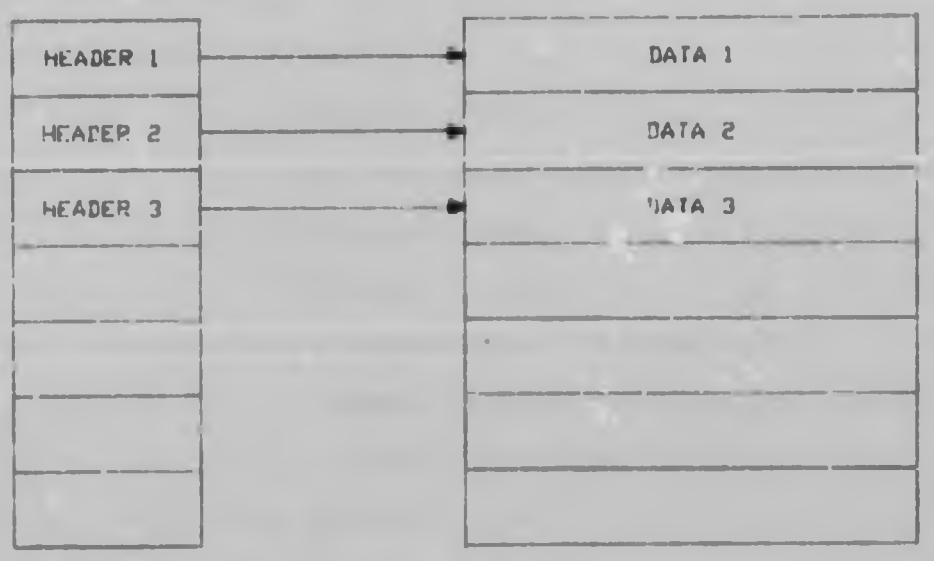

Figure I2 Separate Index And Data Areas For The Cache

Considering the way in which the 80188 manages its memory the second option was chosen. In the first situation when the cache is being searched for a particular entry, a memory area of more than 64K may have to be traversed to find the required header. The 80188 manages its memory in segments with a maximum size of 64K. The segment register would have to be updated then during the search which is undesirable. In the second option the segment register is assigned only once to scan the index since all the data lies well within 64K. An unusual way of implementing a pointer is used in the index as well. The number of bytes in each block of data is divisible by 16. Instead of implementing the pointer using two words i.e. one for the segment and one for the offset, the offset is always made zero and the segment register is made to point to the beginning of the data area for each track. The segment register alone is therefore included in the index.

The index can be described in high level language terms as an array of records as shown below.

```
Track_list_entry = RECORD
                       ive_no : byte;
                  .pplication_no : word;
                  Track_no : byte;
                   Side_no : byte;
                      Mask : byte; {For Caching}
                    XBFREQ : word; {For Caching}
                     XBAGE : word; {For Caching}
               Data_pointer : word;
                 END;
Index = ARRAY[1 .. no_of_sides] OF Track_list_entry;
```

This is shown diagrammatically in Figure I3.

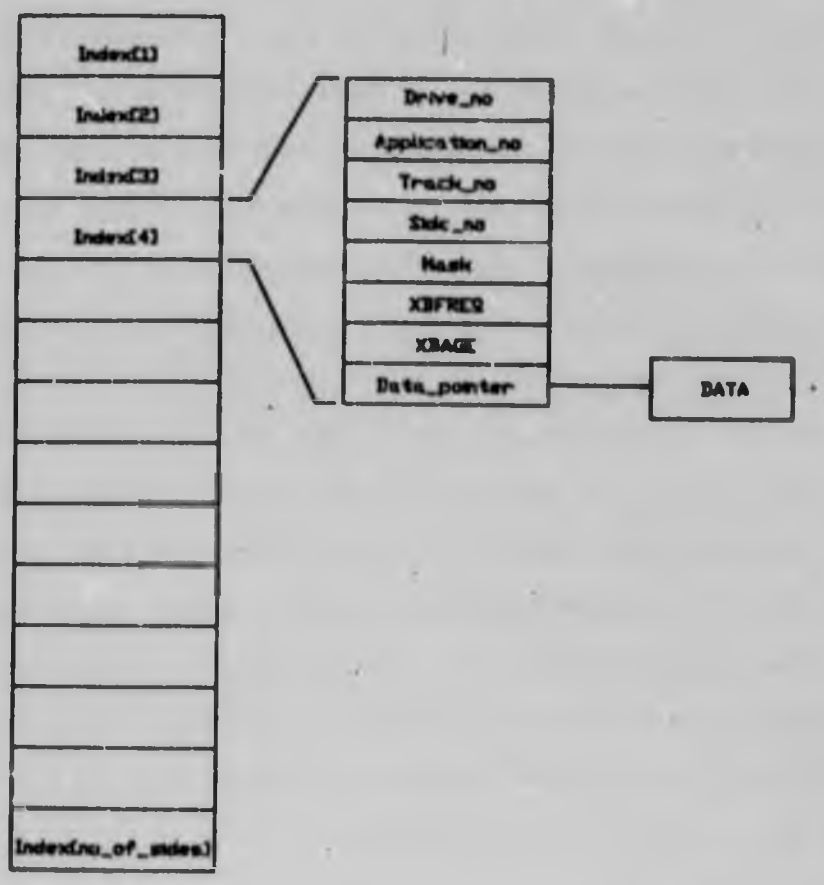

Figure I3 Diagrammatic Representation Of The Cache Data Structure

Managing the cache is a simple task until all the blocks in the cache are filled. The problem then arises as to which block should be overwritten. Decision algorithms in common use are random replacement, First In / First Out (FIFO) and Least Recently Used (LRU). In large caches the performance of these algorithms is much the same[5].The key to the better technique proposed by McKeon [6] is to measure the frequency of access of a block and use this in combination with when last the block was used when making the replacement decision. The additional information in the RECORD above is to implement this algorithm. The Mask is to indicate whether a block is in use and whether a track has been updated i.e. written to, but has not yet been updated on the file server. XBFREQ is used for the frequency of access while XBAGE is for when last the block was used.

When a block is found in the cache (a 'hit'), the frequency of access parameter (XBFREQ) is increased. When a block is not in the cache (a 'miss') and no buffers are free, the cache is scanned to find a block with the lowest frequency of use i.e. lowest XBFREQ and this block is replaced. If multiple blocks with the same lowest frequency of use are found, then the block that has not been used for the largest amount of time is replaced. This decision is made using the XBAGE parameter. It is obvious that copies that stay in the cache have a better chance of being found and therefore the XBFREQ parameters will continue to increase. This parameter is 'decayed' over a period of time otherwise some blocks would remain permanently in the cache. The decay process is implemented by halving the XBFREQ parameter every sixteenth call to the cache. The reason for halving every sixteenth call is that these functions can be performed conveniently and quickly using masking and rotates. The XBFREQ parameter is increased by 128 for each 'hit'. Using these values, even in the worst case where the same block is accessed repeatedly, the XBFREQ parameter cannot overflow. The maximum that XBFREQ can attain is 16 X 128 + ½ X 16 X 128 + ½ X 16 X 28 + ... which can be recognised as a geometric

progression. In the limit then the maximum value that can be reached is 2 X 16 X 128.

A high level description of the replacement algorithm, based on the data structure described above, is shown below.

```
CONST
  no_of_sides = 42;      {Maximum number of tracks in cache }
  in_use = 10000000B;    {Bit mask indicating block in use }
VAR
  devioage : word;       {Global variable}
BEGIN
  devioage := 0;         {Initialisa    of variable in main program}
PROCEDURE get_block (reqdrive, req        eqtrack : byte,
                                 reqAppln_no       : word,
                                 VAR data_point    : word);
  VAR
    index_posn : byte;
  BEGIN
    devioage := devioage + 1; {increment global age for each routine access
}
    IF devioage = 16 THEN
       FOR index_posn := 1 TO no_of_sides DO
         WITH index[i] DO
           IF ((Mask AND in_use) = 1) THEN
              XBFREQ := XBFREQ DIV 2;
       {If block in use then halve the frequency of access }
    Findblock(reqdrive, reqside, reqtrack, reqAppln_no, status, index_posn);
    IF status = successful THEN
       WITH index[index_posn] DO
         BEGIN
           XBFREQ := XBFREQ + 128; {Record a hit}
           XBAGE := devioage; {Update access age}
           data_point := data_pointer {Set pointer to data area}
```

```
      status := successful;
    END
  ELSE BEGIN {block not in cache}
         allocate_block (index_posn);
         WITH index[index_posn] DO
           BEGIN
             Drive := reqdrive;
             Side := reqside;
             Track := reqtrack;
             Application_no := reqAppln_no;
             Mask := in_use;
             XBAGE := devioage;
             XBFREQ := 0;
             data_point := data_pointer;
           END;
         get_data (data_pointer);
       END;

PROCEDURE Findblock (reqdrive, reqside, reqtrack : byte;
                                        reqAppln_no : word;
                             VAR status  index_posn : byte);
  BEGIN
    index_posn := 0;
    REPEAT
      index_posn := index_posn + 1;
    UNTIL (index[index_posn].Drive = reqdrive AND
           index[index_posn].Side = reqside   AND
           index[index_posn].Track = reqtrack AND
           index[index_posn].Application_no = reqAppln_no) OR
          (index_posn = no_of_sides);
    status := NOT (index_posn = no_of_sides);
  END;
```

```
PROCEDURE allocate_block (VAR index_posn : byte);
  VAR
    age, freq, oldest : word;
    i, marker : byte;
  BEGIN
    index_posn := 0;
    REPEAT
      index_posn := index_posn +1;
    UNTIL ((index[index_posn].Mask AND in_use) = 0) OR
          (index_posn = no_of_sides);
    status := NOT (index_posn = no_of_sides);
    IF NOT status THEN
       BEGIN
         freq := 32767;   {Find XBFREQ smaller than this}
         oldest := 0;
         FOR i:= 1 TO no_of_sides DO
             WITH index[i] DO
               IF ((Mask AND in_use) = 1) AND ((Mask AND write) = 0)
                  THEN IF XBFREQ <= freq THEN
                          BEGIN
                            freq := XBFREQ;
                            age := devioage - XBAGE;
                            IF (age > oldest) THEN
                               BEGIN
                                 oldest := age;
                                 marker := i;
                               END;
                          END
       END
  END;
```

The get_block procedure would be called each time data is required from the cache. The procedures are then called as required. The get_data procedure is not described here but this procedure's responsibility is to obtain the required data from the file-server and insert it at the area starting where data_pointer is pointing to.

APPENDIX J WHY 'STAR-BUS' NOT ETHERNET

The disk drive emulator board has a nett data rate of 250Kbits per second between it and the P.C.. To provide each user with a response time comparable to that of a floppy disk, the network must be capable of providing data at a sufficient rate. To illustrate the needs of the network a loading situation that was described earlier to be possible in this type of environment will be considered viz. a number of users simultaneously requesting data that has to be fetched from the file-server. The emulation of a track of data takes approximately 200ms. If we take a number of emulators each successively requesting data from the file-server we can obtain a feel for the bit rate necessary for the network. A bit rate of 250Kbits per second would therefore sustain the needs of one emulator. If we take a system with 25 P.C.'s the required bit rate can be calculated.

Data rate = 250Kbits per second × 25

= 6,250 Mbits per second

An Ethernet type system with a bit rate of 10 Mbits per second would therefore satisfy the requirements from the bit rate point of view. This has some significant cost implications as will be discussed shortly.

Looking at a simpler twisted pair type network with transmission speeds of the order of 1 Mbit per second we find that the operation of a maximum of four emulators can be sustained. This therefore does not provide very extensive networking capabilities. Typical maximum transmission speeds that can be achieved with common communications controllers is 1.25Mbits per second. This increases the maximum number of emulators to five. The possibility of constructing a star type network with the file-server at the hub was considered. Each ray of the star would consist of a bus structure operating at 1.25Mbit per second. The number of these rays could

be increased until sufficient nodes could be catered for. In this way an equivalent effective throughput of the Ethernet system could be achieved.

As always these two systems have compromises. In the first instance the cost and complexity per emulator would be increased considerably since hardware capable of providing these high bit rates has to be provided. The file-server would only require one of these Ethernet type controllers and would therefore be less complex than that for the star system. For the second system each emulator need only be capable of transferring data at 1.25Mbits per second that can be handled by a communications controller. The emulator's network complexity is therefore limited. The file-server is however far more complex than in the first case. A communications controller is required for each of the rays of the star. The bus access is less contentious however having fewer nodes on each bus since there are a number of busses running in parallel.

The added complexity of the file-server is worthwhile when the costs for the Ethernet type system are considered. Although the system may be complex, the individual components on the file-server board are relatively cheap. The overall system is therefore substantially cheaper. The Ethernet type interface would make the goal of the P.C. interface price being comparable to that of a disk drive, impossible to attain. Typical prices for Ethernet controllers alone are of the order of R200 while the communications controllers in question are of the order of R20. The wiring and installation costs are also substantially cheaper than those associated with a coaxial cable based system.

APPENDIX K THE CSMA CA ACCESS PROTOCOL

The principle of operation of the CSMA CA (Carrier Sense Multiple Access with Collision Avoidance) access protocol will be described.

The purpose of this access protocol is to control the access to a shared bus system in an orderly fashion so as to reduce the probability of collision.

To describe the implementation of a CSMA CA system, the implementation used in the Apple-talk system will be described. In this implementation the bit rate is 250Kbits per second using a RS 422 twisted pair bus.

The dialogues (i.e. transactions on the bus) must be separated by a minimum Inter-Dialogue Gap (IDG) of 400µsec; the different frames of a single dialogue must follow one another with a maximum Inter-Frame Gap (IFG) of 200µsec. Consider the transmission of a data frame as shown in Figure K1. The transmitting node uses the physical layer's ability to sense if the line is in use. If the line is busy the node waits until it becomes idle (the node is said to *defer*). Upon sensing an idle line, the transmitter waits for a time equal to the minimum IDG (400µsec) plus a randomly generated amount. During this "wait", the transmitter continues to monitor the line. If the line remains idle throughout the wait period, then a RTS frame is sent to the intended receiver of the data frame. The receiver must, within the maximum IFG (200µsec), return a CTS frame to the transmitting node. Upon receiving this frame, the transmitter must send out the data frame within the maximum IFG.

The purpose of this collision avoidance algorithm is twofold: (1) to restrict the periods in which collisions are highly likely (this is during the RTS CTS exchange), and (2) to spread out in time several transmitters waiting for the line to become idle. The RTS CTS exchange, if successfully completed signifies that a collision did not occur, and that all intending

transmitters have heard of the coming data frame transmission and are deferring/waiting.

If a collision does occur during the RTS CTS exchange, a CTS will not be received, and the sending node will then *beckoff* and retry. The sending node is said to presume a collision.
The range of the random wait is adjusted if such a collision is detected. In fact, this adjustment or back off is done using a linear back off algorithm that dynamically modifies this range in response to recent traffic history. The idea is that if collisions have been presumed for recently sent packets, this signifies heavier loading and higher contention for the bus. Then the random wait should be generated over a larger range, thus spreading out (in time) the different contenders for the line.

Two factors are used for adjusting the range: (a) the number of times the node had to defer, and (b) the number of times it had to backoff. This history is maintained in two 8-bit *history bytes*, one each for the deferences and for backoffs. At each attempt to send a packet these bytes are shifted left one bit. The lowest bit of each byte is then set if the node had to defer or back off, respectively, on that attempt, else this bit is cleared. In effect the history bytes remember the deference and back off history for the last eight attempts.
The history byte is used to adjust a *global backoff mask*. The mask takes values in the range 00H to 0FH. When the first attempt is made to send a particular frame, and the node must defer, the mask is OR'ed with 01H, thus setting its lowest bit.

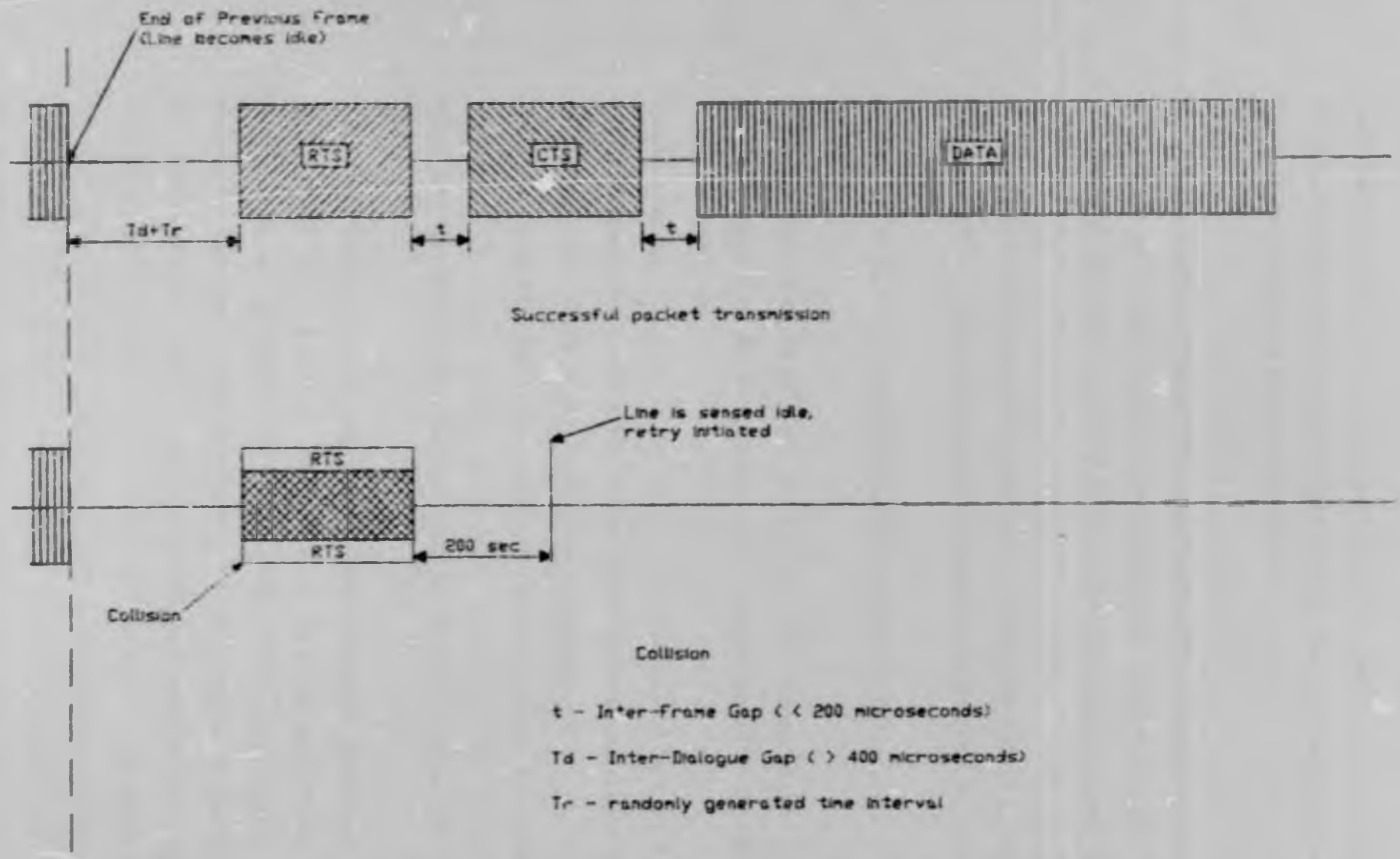

Figure K.1 Timing Of A CSMA CA Network Dialogue

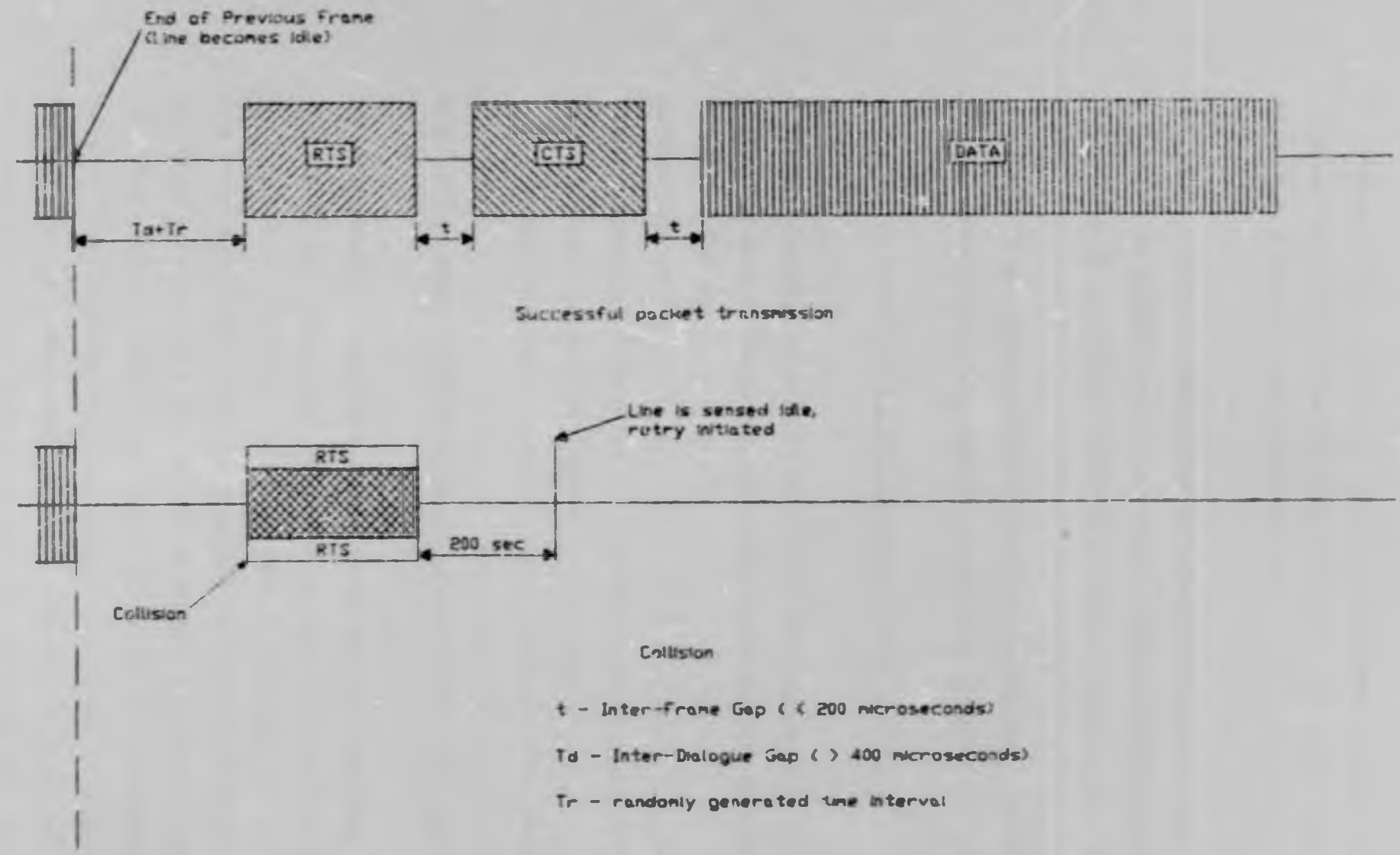

Figure K.1 Timing Of A CSMA CA Network Dialogue

The number of bits set in each history byte provides a count of the number of times the node had to defer (back off) in the last eight attempts. This is used to adjust the mask as follows:-

- If the number of times the node backed off during the last eight attempts is greater than 2, the mask is extended by one bit (up to the maximum of 4 bits) and the back off history byte is then cleared.

- Else, if the number of times the node had to defer is less than 2, the mask is reduced by one bit (down to the minimum of 1 bit).

- Else, if neither of these apply, the mask is left as is.

A typical dialogue takes place as follows (See Figure K1)

L1)The transmitter senses the bus until the bus is idle for the minimum IDG time.

L2)The transmitter waits an additional time determined by a random number.

L3)The transmitter sends a RTS frame to the intended destination node.

L4)The receiver sends a CTS frame to the transmitter.

L5)The transmitter, upon successful reception of the CTS, sends a Data frame.

NOTE: All response frames must be sent within the maximum IFG time.

For each attempt in L2 a new random number must be generated. If after 32 attempts the transmitter is unable to send the data frame, an error is reported to the higher level software The access method may seem clumsy in that three frames are required to transfer on packet of data. The extra transactions required must be weighed against the extra circuitry that would be required to detect collisions on the hardware level. We must also consider the frame format as is shown in Figure K2. The figure shows the general frame format. It should be noted that the frame is of the form used in SDLC links and thus the flags are 7EH bytes and

the frame check sequence is the same as that used in SDLC. Carrier is said to be present when the receiver has detected the start of a valid frame i.e. a flag has been found. The RTS and CTS consist only of the destination address, source address and type field. This type field is used to differentiate between an RTS, CTS and data frames. The data frame thus includes the data field. The frames used therefore to detect collisions are substantially smaller.

The CSMA CA access protocol provides a convenient means for bus control that does not require complex hardware or software.

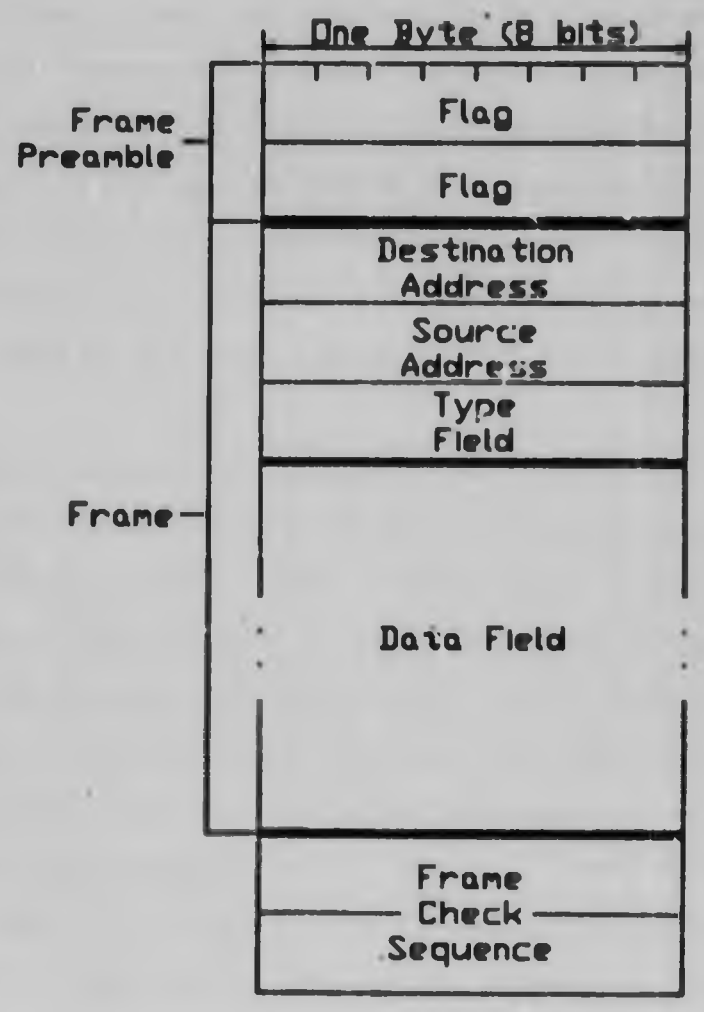

Figure K.2 CSMA CA Frame Format

APPENDIX L MESSAGE PASSING ON TRACK 40

The reason for using track 40 for passing messages between the P.C. and the floppy disk drive emulator will be explained as well as the method used.

The file server needs to know when the logical drives are changed on the P.C. and when application programs are selected in the menu program. The amount of information that has to be transferred between the P.C. and the file-server is small and in general only a few bytes are required. To keep the data transactions between the P.C. and the emulator the same at all times, the method of transferring information in the form of a sector was chosen. In the case of MS-DOS this restricts the maximum message size to 512 bytes which is more than sufficient. Another factor in favour of this method is the availability of BIOS routines in the ROM of the P.C. that allow single sectors to be written to the floppy disk drives.

Before discussing the details of the BIOS routine, let us examine the reason for using track 40. There are three main reasons for this choice. The first is the structure of floppy disks, the second is a hardware restriction and the third is time. The floppy disks being emulated have forty tracks numbered from 0 to 39. None of these tracks can be used for message passing since they carry the data. The track number must therefore be greater than 39. The second constraint is directly related to the floppy disk controller used in the P.C. (Intel 8272A, NEC μPD765). This controller is designed for use in disk systems where the disks have less than 77 tracks. When a RECALIBRATE command is given to the floppy disk controller, the head is stepped outwards towards track 0 until the signal from the floppy disk drive unit indicates that the head is over track 0 (TRACK0). If after 77 step pulses (i.e. 77 tracks) have been issued by the controller and a TRACK0 signal has not been received, the disk con-

APPENDIX L MESSAGE PASSING ON TRACK 40

The reason for using track 40 for passing messages between the P.C. and the floppy disk drive emulator will be explained as well as the method used.

The file server needs to know when the logical drives are changed on the P.C. and when application programs are selected in the menu program. The amount of information that has to be transferred between the P.C. and the file-server is small and in general only a few bytes are required. To keep the data transactions between the P.C. and the emulator the same at all times, the method of transferring information in the form of a sector was chosen. In the case of MS-DOS this restricts the maximum message size to 512 bytes which is more than sufficient. Another factor in favour of this method is the availability of BIOS routines in the ROM of the P.C. that allow single sectors to be written to the floppy disk drives.

Before discussing the details of the BIOS routine, let us examine the reason for using track 40. There are three main reasons for this choice. The first is the structure of floppy disks, the second is a hardware restriction and the third is time. The floppy disks being emulated have forty tracks numbered from 0 to 39. None of these tracks can be used for message passing since they carry the data. The track number must therefore be greater than 39. The second constraint is directly related to the floppy disk controller used in the P.C. (Intel 8272A, NEC μPD765). This controller is designed for use in disk systems where the disks have less than 77 tracks. When a RECALIBRATE command is given to the floppy disk controller, the head is stepped outwards towards track 0 until the signal from the floppy disk drive unit indicates that the head is over track 0 (TRACK0). If after 77 step pulses (i.e. 77 tracks) have been issued by the controller and a TRACK0 signal has not been received, the disk con-

troller indicates a fault with the equipment [3]. This is not acceptable and therefore we cannot step further than 77 tracks from track 0. The permissible range for the message passing track is then between tracks 39 and 77.

Stepping between tracks is a slow process (of the order of milliseconds) and should be avoided as much as possible. It is an advantage therefore to have the track used for messages as close to the data tracks as possible. Hence the choice of track 40.

The BIOS routine for accessing the floppy disks is an interrupt routine viz. INT 13H. Various parameters are passed to this routine via the registers of the 8088/8086 CPU of the P.C..

The parameters are as follows [7]

Inputs: AH = 0 Reset disk system
= 1 Read status of disk system into AL
= 2 Read desired sectors into memory
= 3 Write desired sectors from memory
= 4 Verify desired sectors
= 5 Format desired track
DL - Drive Number (0-3 allowed, value checked)
DH - Head Number (0-1 allowed, not value checked)
CH - Track Number (0-39, not value checked)
CL - Sector Number (1-9, not value checked)
AL - Number of Sectors (Max = 9, not value checked)
ES : BX - Address of Buffer

Outputs: AH = Status of Operation
No Carry - Successful operation (AH = 0 on return)
Carry Set - Operation failed (AH has error reason)

The message to be written is assembled in memory and ES is set to the segment containing the message and BX to the offset of the message. The

required function viz. write desired sectors from memory is chosen by setting AH to 3. An assembler program segment will be given for the sake of completeness.

Note: It is assumed that the message is in a byte array called BUFFER defined as

```
BUFFER  DB      512     DUP(?)
```

The program segment follows:

```
        MOV     AX,SEG BUFFER   ;LOAD SEGMENT IN WHICH BUFFER LIES
        MOV     ES,AX           ;INTO ES
        MOV     BX,OFFSET BUFFER ;LOAD BUFFER OFFSET IN BX
        MOV     AH,3            ;SELECT WRITE SECTORS FUNCTION
        MOV     DL,1            ;SELECT PHYSICAL DRIVE B
        MOV     DH,0            ;SELECT SIDE 0
        MOV     CH,40           ;SELECT TRACK 40
        MOV     CL,1            ;SELECT SECTOR 1
        MOV     AL,1            ;WRITE ONLY ONE SECTOR
        INT     13H             ;CALL BIOS ROUTINE
        .       .
        .       .
```

The floppy disk drive emulator need only emulate this one sector on track 40 since this is the only sector that the floppy disk controller will look for.

This method is an effective way of transferring the required data between the P.C. and the emulator and file server.

APPENDIX M THE MS-DOS DEVICE DRIVER

The device driver creates 24 logical drives on the P.C. as required by the network as well as being responsible for passing messages on track 40 to the emulator when logical drives are changed. This file is called up during the booting up process of the P.C. and forms part of the CONFIG.SYS file. Various criteria for the structure of device drivers are specified and since these are standard they will not be discussed in detail here. Only the important features will be explained since the code (later in the Appendix) is well commented. Numbers in brackets refer to offsets in the program. This is the left-hand most column of numbers in the program listing.

In the device header, the constant DRVMAX (000A) corresponding to the Name/unit field in the standard device header [8] is set to 24 by the INITialisation routine (0650) of the device driver. If fewer drives are required the 24 can be reduced. MS-DOS assigns the letters of the alphabet, starting at A, to block devices such as the disks. Hence the standard two floppy disk system has drives A and B. Subsequent drives are assigned the letters up to Z. If more than 24 drives are requested in this device driver, the drive identifiers become the ASCII characters following capital Z in the ASCII character table. This makes drive identification somewhat difficult. The remainder of the parameters in the device header are the pointer to the next device header, attribute of the device, the pointer to the device strategy and the pointer to the device's interrupt routine in that order.

DRVTBL (000B) contains a number of pointers to routine to be called depending on the function required when the device driver is accessed. As can be seen from the listing a number of these point to the exit routine directly since these functions are not supported by the device driver.

The EXIT (0077) routine by which, as the name implies, the device driver terminates, is responsible for returning status information regarding the operations performed, to the calling program. The most significant bit of AH, when set, indicates that an error has occurred. The least significant bit of AH indicates that the operation is complete. If an error has occurred, the error code is returned in AL. The number of su[illegible]sful I/O operations that did take place is updated before the mach[illegible]tate is restored and control is handed back to the calling program.

The MEDIA$CHK (008B) routine is called by DOS before an operation is perf:rmed by DOS on a logical device. This is necessary so that DOS knows whether this data relates to the actual media in the logical device or not. If we consider a floppy disk system where the medium is removable the information in the buffer may be from a previous disk because the media can be changed between accesses to the disk. In the case of a hard disk which is not removable we know the buffer will have valid information. This media check can return one of three values to DOS viz. The media has been changed, the media hasn't been changed or I don't know if the media has changed. It is obviously an advantage to be able to say that the media has not been changed. In the case of the emulator unfortunately we cannot say that the medium has not changed because a floppy disk may be mapped out by the file-server for example between accesses. The device driver therefore always responds with I don't know if the medium has been changed.

The BUILDBP routine (00AB) generates th[illegible] required BIOS parameter block according to the given media descriptor byte. The routine usually generates the parameter block for a double sided disk with nine sectors per track. It is possible to have 8 sectors per track and a single sided disk if so desired.
This routine is followed by a number of variables, the first of which records the current drive. It may be recalled that both the device driver

in the P.C. as well as the emulator are required to remember which was the most recent logical device that was accessed. This variable performs this function and is initialised to a value that would not normally exist. This is done so that as soon as the first access is made to the one of the logical drives, a message is sent to the emulator. The remaining variables store temporary values during the actual data transfer.

When DOS calls a block device driver i.e. a device driver for a disk or similar system where the data is stored in blocks, the request is in terms of a logical start sector and a number of sectors after that, that have to be read or written. DOS also gives a Transfer Address where this data is to be transferred to or from. This method of requesting data is useful in the general sense that it is not device specific. It is upto the individual device driver to interpret exactly where on the physical device being used, the data must be transferred. In this case therefore we require a start track, start side and starting sector on the physical device. Before the calculations are done to find these parameters the current logical device must be conveyed to the disk drive emulator. In the SETUP (0135) routine after the jump is made to INRANGE (0147), the current drive is compared to the requested drive number. If they are the same all is well, if not a message is passed to the emulator via track 40 (See Appendix L). The message itself is inserted at this stage into the the buffer called TEMP_BUFFER (0450). The maximum length of the message is restricted to 512 bytes. The contents of the message itself are not important as long as they correspond to some message format that the emulator will understand i.e. the emulator's software and the device driver can be modified to send and receive message formats as may be required.

The message passing along with making the physical drive B in all cases takes care of the mapping of all the logical devices into one physical device. This is followed by the calculation of the physical location of

the data required from the logical sector specified by DOS. The number of sectors to be transferred is stored for later use. To calculate the starting sector the logical sector is divide by the number of sectors per track. The remainder of this calculation gives the starting sector between 0 and one less than the number of sectors per track. This value is incremented and stored. The quotient of this calculation is then divided by the number of heads on the device, in this case two, to determine on which side of the disk the data transfer begins. The remainder of this division thus gives the head required, while the quotient gives the starting track. We can now commence the data transfer.

The actual data transfer software has to be inside a loop, the reason for this being that the maximum number of sectors that can be transferred by each BIOS call is in this case nine i.e. one whole track. The number of sectors requested by DOS may exceed this value or we may have the situation where only two sectors may be required but the first of these is the last sector on a track. Two BIOS calls have to be made in this case. The loop counter therefore is the number of sectors that have to be transferred The loop performs the following:- A retry counter is reset for each I/O operation. Four retries are performed for each operation before an error status is returned to DOS. The RESET (03C0) routine checks for when the end of a track has been reached. If the track end has been reached and the operation has just been performed on side zero then the side is changed to 1 and the physical sector set to 1 i.e. the start of the track on the other side of the disk. If the end of the track on side one is reached, the track number is incremented, the physical sector set to one and the side set back to zero. The first time this routine is called, none of these situations will arise since the starting parameters will just have been calculated. The parameters for the BIOS routine (See Appendix L) are loaded and the routine called. This BIOS routine returns with the carry flag set if an error has occurred. AL returns the number of sectors that have been transferred. Taking initially the case when

the routine returns without an error, the transfer address has to be updated by an amount equal to the number of sectors transferred times the sector size. The segment register (ES) is constantly updated to prevent the offset register overflowing. The transfer address is not updated by the BIOS routine since the data transfer is performed using DMA. The correct value of the transfer address must be obtained for subsequent data transfers. The number of sectors still to be transferred is updated and then the loop repeated until all the required data has been transferred.

When an error condition is returned by the BIOS suitable error handling has to be performed (BIOS_ERROR). The exact cause of this condition is returned in the AH register If a DMA error is returned (AH=9) it is handled differently to the others since it is the only error that may not disappear if a retry is attempted. Since the cause and handling of this error are somewhat different to that for the others it will be discussed later. The retry counter is decremented and the operation re-attempted until the operation is either successful or the number of retries has been exceeded. In the latter case the BIOS error number is transformed to DOS via ERROR_EXIT (0292)

The DMA error results from a hardware design aspect of the P.C.. The DMA controller used is only capable of addressing 64K of memory directly. The P.C.'s memory size is 1 Mbyte and for this reason an extra register has been added to accommodate the extra memory i.e. the DMA controller controls address lines A0 - A15 while the register controls lines A16 - A19. The DMA error occurs in the following situation, DOS may allocate a data transfer area that causes the address register of the DMA controller to overflow. What we would like to happen is that the extra register be incremented automatically. Before commencing the data transfer the BIOS routine checks for this situation and if it will occur the error is returned. The following procedure is then adopted: the number of whole sectors that can be transferred before the overflow occurs is calculated.

A request to transfer these sectors is then given. The sector in which the overflow occurs is then transferred to a temporary buffer (TEMP_BUFFER) i.e. a request to transfer one sector is given with the transfer address being that of the temporary buffer. When this transfer has taken place, the temporary buffer is transferred byte by byte to the original data transfer area. The remaining sectors are then transferred in the normal manner. A similar approach is used when the problem occurs with a disk write. In this case however the data is transferred into the temporary buffer before the BIOS routine is called.

INITAB contains a pointer to a BIOS parameter block for each of the logical devices. The DRV$INIT routine is called to initialise the device driver. The 24 that is loaded into AL in the first line of this routine is what must be changed if fewer device drivers are wanted.

```
                                        PAGE        ,132        ;SET PAGE WIDTH TO 132
                                        TITLE       MULTIDISK Multiple logical floppy disk device driver

                                ;THIS CREATES 24 LOGICAL FLOPPY DISK DRIVES
0000                            CODE SEGMENT
0000                                    ORG         0000H
                                        ASSUME CS : CODE,DS : NOTHING,ES : NOTHING,SS : NOTHING

                                        ;DEVICE HEADER

0000                            DRVDEV  LABEL       WORD
0000  FFFF FFFF                         DW          -1,-1
0004  0000                              DW          0000H       ;BLOCK DEVICE,
                                                                  ;IOCTL NOT SUPPORTED,
                                                                  ;IBM FORMAT, NOT CURRENT CLOCK,
                                                                  ;NOT NUL DEVICE,
                                                                  ;NOT STANDARD OUTPUT OR
                                                                  ;INPUT DEVICE
0006  0029 R                           DW          STRATEGY    ;DEVICE STRATEGY
0008  0034 R                           DW          DRV$IN      ;INTERRUPT ROUTINE
000A  18                        DRVMAX  DB          24
0008                            DRVTBL  LABEL       WORD        ;COMMAND CODES
0008  0650 R                           DW          DRV$INIT    ;INIT
000D  088B R                           DW          MEDIASCHK   ;MEDIA CHECK
000F  0096 R                           DW          GET$BPB     ;BUILD BPB
0011  0067 R                           DW          CMDERR      ;IOCTL INPUT
0013  0117 R                           DW          DRV$READ    ;INPUT (READ)
0015  0077 R                           DW          EXIT        ;NON-DESTRUCTIVE INPUT
0017  0077 R                           DW          EXIT        ;INPUT STATUS
0019  0077 R                           DW          EXIT        ;INPUT FLUSH
001B  D123 R                           DW          DRV$WRIT    ;OUTPUT WRITE
001D  D123 R                           DW          DRV$WRIT    ;OUTPUT WRITE (WITH VERIFY)
001F  0077 R                           DW          EXIT        ;OUTPUT STATUS (CHAR DEVICES)
0021  0077 R                           DW          EXIT        ;OUTPUT FLUSH (CHAR DEVICES)
0023  0077 R                           DW          EXIT        ;IOCTL

                                        ;STRATEGY
0025  00 00 00 00               PTRSAV  DD          0

0029                            STRATP  PROC        FAR
0029  2E: 89 1E 0025 R          STRATEGY:   MOV     WORD PTR [PTRSAV],BX
002E  2E: 8C 06 0027 R                  MOV         WORD PTR [PTRSAV+2],ES
0033  CB                                RET
0034                            STRATP  ENDP

                                ;OFFSETS IN REQUEST HEADER
= 0000                          CMDLEN  =           0           ;COMMAND LENGTH
= 0001                          UNIT    =           1           ;SUB UNIT SPECIFIER
= 0002                          CMDC    =           2           ;COMMAND CODE
= 0003                          STATUS  =           3           ;STATUS
= 000D                          MEDIA   =           13          ;MEDIA DESCRIPTOR
= 000E                          TRANS   =           14          ;TRANSFER ADDRESS
= 0012                          COUNT   =           18          ;COUNT OF BLOCK OR CHARS
= 0014                          START   =           20          ;FIRST BLOCK TO TRANSFER
```

```
0034  56                        DRVSIN:     PUSH    SI              ;SAVE MACHINE STATE
0035  50                                    PUSH    AX
0036  51                                    PUSH    CX
0037  52                                    PUSH    DX
0038  57                                    PUSH    DI
0039  55                                    PUSH    BP
003A  1E                                    PUSH    DS
003B  06                                    PUSH    ES
003C  53                                    PUSH    BX
003D  2E: C5 1E 0025 R                      LDS     BX,(PTRSAV)     ;GET POINTER TO REQUEST HEADER
0042  8A 47 01                              MOV     AL,BYTE PTR(BX).UNIT    ;UNIT CODE
0045  8A 67 0D                              MOV     AH,BYTE PTR(BX).MEDIA   ;MEDIA DESCRIPTOR
0048  8B 4F 12                              MOV     CX,WORD PTR(BX).COUNT   ;COUNT
004B  8B 57 14                              MOV     DX,WORD PTR(BX).START   ;START SECTOR
004E  50                                    PUSH    AX
004F  8A 47 02                              MOV     AL,BYTE PTR(BX).CMDC    ;COMMAND CODE
0052  3C 08                                 CMP     AL,11
0054  77 10                                 JA      CMDERRP                 ;JUMP IF BAD COMMAND
0056  98                                    CBW
0057  D1 E0                                 SHL     AX,1                    ;CONVERT TO WORD
0059  BE 0008 R                             MOV     SI,OFFSET DRVTBL        ;INDEX TABLE
005C  03 F0                                 ADD     SI,AX
005E  58                                    POP     AX                      ;GET BACK MEDIA AND UNIT
005F  C4 7F 0E                              LES     DI,DWORD PTR(BX).TRANS  ;ES : DI = TRANSFER ADDRESS
0062  0E                                    PUSH    CS
0063  1F                                    POP     DS
                                  ASSUME DS : CODE
0064  FF 24                                 JMP     WORD PTR(SI)            ;DO COMMAND

                                            ;EXIT
                                            ;ALL ROUTINES EXIT THROUGH HERE
                                  ASSUME DS : NOTHING
0066  58                         CMDERRP:     POP     AX                      ;CLEAN UP STACK
0067  B0 03                      CMDERR:      MOV     AL,3                    ;UNKNOWN COMMAND ERROR
0069  EB 0B                                 JMP     SHORT ERRSEXIT
006B  2E: C5 1E 0025 R           ERRSCNT:    LDS     BX,(PTRSAV)
0070  29 4F 12                              SUB     WORD PTR(BX).COUNT,CX
0073  B4 81                      ERRSEXIT:   MOV     AH,10000001B            ;MARK ERROR RETURN
0075  EB 02                                 JMP     SHORT ERR1

0077                              EXITP       PROC    FAR
0077  B4 01                      EXIT:       MOV     AH,00000001B            ;STATUS DONE
0079  2E: C5 1E 0025 R           ERR1:       LDS     BX,(PTRSAV)
007E  89 47 03                              MOV     WORD PTR(BX).STATUS,AX  ;MARK OPERATION
                                                                            ;COMPLETE
0081  5B                                    POP     BX
0082  07                                    POP     ES
0083  1F                                    POP     DS
0084  5D                                    POP     BP
0085  5F                                    POP     DI
0086  5A                                    POP     DX
0087  59                                    POP     CX
0088  58                                    POP     AX
0089  5E                                    POP     SI
008A  CB                                    RET                             ;RESTORE REGISTERS AND RETURN
008B                              EXITP       ENDP
```

```
008B                            MEDIA$CHK:
                                ASSUME DS : CODE
008B  33 FF                             XOR     DI,DI           ;I DON'T KNOW
008D  C5 1E 0025 R                      LDS     BX,[PTRSAV]
0091  89 7F 0E                         MOV     WORD PTR[BX].TRANS,DI
0094  EB E1                             JMP     EXIT

0096                            GETSBPB:
                                ASSUME DS : CODE
0096  26: 8A 25                         MOV     AH,BYTE PTR ES : [DI]
0099  E8 00AB R                         CALL    BUILDBP
009C  C5 1E 0025 R              SETBPB: LDS     BX,[PTRSAV]
00A0  88 67 0D                          MOV     [BX].MEDIA,AH
00A3  89 7F 12                          MOV     [BX].COUNT,DI
00A6  8C 4F 14                          MOV     [BX].COUNT+2,CS
00A9  EB CC                             JMP     EXIT

00AB                            BUILDBP:
                                ASSUME DS : NOTHING
                                ;AH IS MEDIA BYTE ON ENTRY
                                ;DI POINTS TO CORRECT BPB ON RETURN
00AB  50                                PUSH    AX
00AC  51                                PUSH    CX
00AD  52                                PUSH    DX
00AE  53                                PUSH    BX
00AF  8A CC                             MOV     CL,AH           ;SAVE MEDIA
00B1  80 E1 F8                          AND     CL,0F8H         ;NORMALIZE
00B4  80 F9 F8                          CMP     CL,0F8H         ;COMPARE WITH GOOD MEDIA BYTE
00B7  74 02                             JZ      GOODID
00B9  B4 FD                             MOV     AH,0FDH         ;DEFAULT TO 2 SIDES 9 SECTORS
00BB  B0 01                     GOODID: MOV     AL,1            ;NUMBER OF FAT SECTORS
00BD  BB 4008                           MOV     BX,64*256+8     ;DIR ENTRIES AND MAX SECTORS
00C0  B9 0140                           MOV     CX,40*8         ;SIZE OF DRIVE
00C3  BA 0101                           MOV     DX,256+1        ;HEAD LIMIT + SECS/ALLOC UNIT
00C6  BF 040B R                         MOV     DI,OFFSET DRVBPB
00C9  F6 C4 02                          TEST    AH,00000010B    ;TEST FOR 9 SECTORS
00CC  75 07                             JNZ     HAS8
00CE  FE C0                             INC     AL              ;INCREASE NO OF FAT SECTORS
00D0  FE C3                             INC     BL              ;INCREASE SECTOR MAX
00D2  83 C1 28                          ADD     CX,40           ;INCREASE DISK SIZE
00D5  F6 C4 01                  HAS8:   TEST    AH,00000001B    ;TEST FOR TWO HEADS
00D8  74 08                             JZ      HAS1
00DA  03 C9                             ADD     CX,CX           ;DOUBLE SIZE OF DISK
00DC  B7 70                             MOV     BH,112          ;INCREASE NO OF DIR ENTRIES
00DE  FE C6                             INC     DH              ;INC SECS/ALLOC UNIT
00E0  FE C2                             INC     DL              ;INC HEAD LIMIT
00E2  88 75 02                  HAS1:   MOV     BYTE PTR[DI].2,DH
00E5  88 7D 06                          MOV     BYTE PTR[DI].6,BH
00E8  89 4D 08                          MOV     WORD PTR[DI].8,CX
00EB  88 65 0A                          MOV     BYTE PTR[DI].10,AH
00EE  88 45 0B                          MOV     BYTE PTR[DI].11,AL
00F1  88 5D 0D                          MOV     BYTE PTR[DI].13,BL
00F4  88 55 0F                          MOV     BYTE PTR[DI].15,DL
00F7  B8 0200                           MOV     AX,512
00FA  89 05                             MOV     WORD PTR[DI].0,AX
00FC  B8 0001                           MOV     AX,1
00FF  89 45 03                          MOV     WORD PTR[DI].3,AX
```

```
0102  B0 02                                  MOV     AL,2
0104  8F 45 05                               MOV     BYTE PTR(DI).5,AL  ;SAVE PARAMETERS
0107  5B                                     POP     BX
0108  5A                                     POP     DX
0109  59                                     POP     CX
010A  58                                     POP     AX
010B  C3                                     RET

010C  FF                 CUR_DRV             DB      0FFH        ;CURRENT DRIVE
010D  0000               SECCNT              DW      0           ;NO OF SECS TO BE TRANSFERRED
010F  00                 CURHD               DB      0           ;CURRENT HEAD NUMBER
0110  00                 CURSEC              DB      0           ;CURRENT SECTOR NUMBER
0111  0000               CURTRK              DW      0           ;CURRENT TRACK NUMBER
0113  00                 DRIVE               DB      0           ;CURRENT DRIVE
0114  0000               NO_OF_SECTS         DW      0           ;NO OF SECTS TRANSFERRED IN
                                                                 ;BIOS CALL
0116  00                 RETRY_CNT           DB      0           ;RETRY COUNTER
                         ;BPB OFFSETS
= 0008                   DRVLIM              =       8           ;NO OF SECTORS ON THE DEVICE
= 000D                   SECLIM              =       13          ;MAXIMUM SECTOR NUMBER
= 000F                   HDLIM               =       15          ;MAXIMUM HEAD NUMBER
= 0004                   NO_OF_TRIES         EQU     4           ;RETRY VALUE

                         ;                   DISK I/O HANDLERS
                         ;ENTRY              AL = DRIVE NUMBER
                         ;                   AH = MEDIA DESCRIPTOR
                         ;                   CX = SECTOR COUNT
                         ;                   DX = FIRST SECTOR
                         ;                   DS = CS
                         ;                   ES : DI = TRANSFER ADDRESS
                         ;EXIT
                         ;                   IF SUCCESSFUL CARRY FLAG = 0
                         ;                   ELSE IF CF = 1 THEN AL CONTAINS MS-DOS ERROR CODE
                         ;                   CX CONTAINS NUMBER OF SECTORS NOT TRANSFERRED

0117                     DRV$READ:
                                             ASSUME  DS : CODE
0117  E3 19                                  JCXZ    DSKOK
0119  E8 0135 R                              CALL    SETUP
011C  72 0F                                  JC      DSK$IO
011E  E8 01B2 R                              CALL    DISKRD
0121  EB 0A                                  JMP     SHORT DSK$IO

0123                     DRV$WRIT:
                                             ASSUME  DS : CODE
0123  E3 0D                                  JCXZ    DSKOK
0125  E8 0135 R                              CALL    SETUP
0128  72 03                                  JC      DSK$IO
012A  E8 02D4 R                              CALL    DISKWRT

                                             ASSUME  DS : NOTHING
012D  [illegible] 03     DSK$IO:             JNC     DSKOK
012F  E9 006B R                              JMP     ERR$CNT
0132  E9 0077 R          DSKOK:              JMP     EXIT
```

```
0135                            SETUP:
                                ASSUME      DS : CODE

                                ;OUTPUT   ES : DI = TRANS ADDR
                                ;         DS : BX POINTS TO BPB
                                ;         CARRY SET IF ERROR (AL HAS MS-DOS ERROR CODE))
                                ;         (DRIVE) = DRIVE NUMBER
                                ;         (SECCNT) = TOTAL SECTORS TO TRANSFER
                                ;         (CURSEC) = SECTOR NUMBER OF START OF I/O
                                ;         (CURHD) = HEAD NUMBER OF START OF I/O
                                ;         (CURTRK) = TRACK NO. OF START OF I/O
                                ;         ALL REGISTERS DESTROYED
0135  87 DF                                    XCHG        BX,DI               ;ES : BX = TRANSFER ADDR
0137  E8 00AB R                                CALL        BUILDBP             ;DS : DI = PTR TO BPB
013A  8B F1                                    MOV         SI,CX               ;NO OF SECTORS
013C  03 F2                                    ADD         SI,DX               ;ADD TO START SECTOR
013E  3B 75 08                                 CMP         SI,WORD PTR[DI].DRVLIM ;MAX NO OF SECTORS
0141  76 04                                    JBE         INRANGE
0143  B0 08                                    MOV         AL,8                ;ERROR CODE
0145  F9                                       STC                             ;SET CARRY FLAG
0146  C3                                       RET

0147  C6 06 0116 R 04          INRANGE:        MOV         [RETRY_CNT],NO_OF_TRIES ;INITIALISE RETRY
014C  3A 06 010C R                             CMP         AL,[CUR_DRV]        ;IS CURRENT DRIVE ?
0150  74 39                                    JZ          SKIP_FORTY          ;JUMP CURRENT DRIVE
0152  A2 010C R                                MOV         [CUR_DRV],AL
0155  50                                       PUSH        AX
0156  B4 0E                                    MOV         AH,0EH
0158  B0 07                                    MOV         AL,7
015A  CD 10                                    INT         10H
015C  58                                       POP         AX
015D  50                                       PUSH        AX
015E  53                                       PUSH        BX                  ;SAVE REGISTERS
015F  51                                       PUSH        CX
0160  52                                       PUSH        DX
0161  06                                       PUSH        ES
0162  8C C8                                    MOV         AX,CS
0164  8E C0                                    MOV         ES,AX               ;ES = CS
0166  BB 0450 R                                MOV         BX,OFFSET TEMP_BUFFER
                                ;PUT MESSAGE IN BUFFER HERE
0169  A0 010C R                                MOV         AL,[CUR_DRV]        ;TEMP MESSAGE
016C  A2 0450 R                                MOV         TEMP_BUFFER[0],AL
016F  A2 0451 R                                MOV         TEMP_BUFFER[1],AL
0172  A2 0452 R                                MOV         TEMP_BUFFER[2],AL
0175  A2 0453 R                                MOV         TEMP_BUFFER[3],AL
0178  B4 03                                    MOV         AH,3                ;WRITE OPERATION
017A  B0 01                                    MOV         AL,1                ;ONE SECTOR
017C  B1 01                                    MOV         CL,1                ;SECTOR ONE
017E  B5 28                                    MOV         CH,40               ;TRACK FORTY !
0180  B2 01                                    MOV         DL,1                ;DRIVE B
0182  B6 00                                    MOV         DH,0                ;SIDE 0
0184  CD 13                                    INT         13H
0186  07                                       POP         ES
0187  5A                                       POP         DX
0188  59                                       POP         CX
0189  5B                                       POP         BX
018A  58                                       POP         AX
```

```
018B  B0 01                SKIP_FORTY:     MOV     AL,1                    ;MAKE IT DRIVE B
018D  A2 0113 R                            MOV     (DRIVE),AL              ;SAVE DRIVE NUMBER
0190  89 0E 010D R                         MOV     (SECCNT),CX             ;SAVE SECTOR COUNT
0194  92                                   XCHG    AX,DX                   ;SET UP LOGICAL SECTOR
                                                                           ;FOR DIVIDE
0195  33 D2                                XOR     DX,DX                   ;SET DX TO 0
0197  F7 75 0D                             DIV     WORD PTR(DI).SECLIM     ;DIVIDE BY SECTORS PER
                                                                           ;TRACK
019A  FE C2                                INC     DL
019C  88 16 0110 R                         MOV     (CURSEC),DL             ;SAVE CURRENT SECTOR
01A0  8B 4D 0F                             MOV     CX,WORD PTR(DI).HDLIM ;GET NUMBER OF HEADS
01A3  33 D2                                XOR     DX,DX                   ;ZERO DX
01A5  F7 F1                                DIV     CX                      ;DIVIDE TRACKS BY HEADS
                                                                           ;PER CYLINDER
01A7  88 16 010F R                         MOV     (CURHD),DL              ;SAVE CURRENT HEAD
01AB  A3 0111 R                            MOV     (CURTRK),AX             ;SAVE CURRENT TRACK
01AE  F8                                   CLC                             ;CLEAR CARRY FLAG
01AF  87 DF                                XCHG    BX,DI                   ;ES : DI = TRANS ADDRESS
01B1  C3                                   RET

01B2                       DISKRD:
                                           ASSUME  DS : CODE
01B2  8B 0E 010D R                         MOV     CX,(SECCNT)             ;STORE NO OF SECS
01B6  C6 06 0116 R 04      RDLP:           MOV     (RETRY_CNT),NO_OF_TRIES ;INITIALISE RETRY
01BB  E8 03C0 R                            CALL    PRESET
01BE  51                                   PUSH    CX                      ;SAVE COUNTER
01BF  57                                   PUSH    DI                      ;SAVE ORIGINAL VALUE
01C0  B1 04                                MOV     CL,4                    ;ROTATE COUNTER
01C2  D3 EF                                SHR     DI,CL                   ;DIVIDE DI BY 16
01C4  50                                   PUSH    AX
01C5  8C C0                                MOV     AX,ES
01C7  03 C7                                ADD     AX,DI                   ;UPDATE VALUE OF ES
01C9  8E C0                                MOV     ES,AX
01CB  58                                   POP     AX                      ;RESTORE AX
01CC  5F                                   POP     DI                      ;RESTORE DI
01CD  81 E7 000F                           AND     DI,0000000000001111B ;LEAVE REMAINDER IN DI
                           ;SET UP PARAMETERS FOR BIOS CALL
0101  8A 16 0113 R         RETRY_ENTRY:    MOV     DL,(DRIVE)              ;DRIVE NUMBER
0105  8A 36 010F R                         MOV     DH,(CURHD)              ;HEAD NUMBER
0109  8B 0E 0111 R                         MOV     CX,(CURTRK)             ;TRACK NUMBER
010D  8A E9                                MOV     CH,CL
010F  8A 0E 0110 R                         MOV     CL,(CURSEC)             ;SECTOR NUMBER
01E3  A1 0114 R                            MOV     AX,(NO_OF_SECTS)        ;NO OF SECTORS IN AL
01E6  87 DF                                XCHG    BX,DI                   ;BX IS BUFFER OFFSET
                                                                           ;FOR BIOS
01E8  B4 02                                MOV     AH,2                    ;READ FUNCTION REQUIRED
01EA  CD 13                                INT     13H                     ;BIOS DISK CALL
                           ;TRAP ERRORS HERE I.E. CHECK CARRY AND RESET AND RETRY
01EC  87 DF                                XCHG    BX,DI                   ;DI AND BX RESTORED
01EE  72 25                                JC      BIOS_ERROR
01F0  59                   ERROR_RET:      POP     CX                      ;RESTORE COUNTER
01F1  52                                   PUSH    DX                      ;PREPARE TO MULTIPLY
01F2  8B 16 040B R                         MOV     DX,WORD PTR DRVBPB      ;LOAD SECTOR SIZE
01F6  A1 0114 R                            MOV     AX,(NO_OF_SECTS) ;AL HAS NO OF SECTS LOADED
01F9  F7 F2                                MUL     DX                      ;NUMBER OF BYTES LOADED
01FB  5A                                   POP     DX
01FC  03 F8                                ADD     DI,AX                   ;UPDATE POINTER
```

```
                                ;NOTE IT IS ACTUALLY THE NO OF SECTORS X SECTOR SIZE
01FE  A0 0110 R                         MOV     AL,(CURSEC)
0201  B4 00                             MOV     AH,0
0203  03 06 0114 R                      ADD     AX,(NO_OF_SECTS)
0207  A2 0110 R                         MOV     (CURSEC),AL
020A  2B 0E 0114 R                      SUB     CX,(NO_OF_SECTS)
020E  83 F9 00                          CMP     CX,0
0211  7F A3                             JG      RDLP
0213  F8                               CLC                             ;CLEAR CARRY FLAG
0214  C3                               RET
0215  80 FC 09            BIOS_ERROR:   CMP     AH,9                    ;IF DMA ERROR ?
0218  74 0C                             JZ      RDMA_ERROR
021A  FE 0E 0116 R                      DEC     (RETRY_CNT)
021E  74 72                             JZ      ERROR_EXIT
0220  B4 00                             MOV     AH,0
0222  CD 13                             INT     13H                     ;RESET FDC
0224  EB AB                             JMP     RETRY_ENTRY
0226  51                  RDMA_ERROR:   PUSH    CX
0227  8C C0                             MOV     AX,ES                   ;LOAD SEGMENT IN USE
0229  B1 04                             MOV     CL,4                    ;ROTATE COUNTER
022B  D3 E0                             SHL     AX,CL                   ;MULTIPLY BY 16
022D  03 C7                             ADD     AX,DI
022F  B9 0000                           MOV     CX,0                    ;INITIALISE COUNTER
0232  03 06 040B R          WHILE:      ADD     AX,WORD PTR DRVBPB      ;ADD SECTOR LENGTH
0236  72 03                             JC      END_WHILE
0238  41                                INC     CX                      ;INCREMENT COUNTER
0239  EB F7                             JMP     WHILE
023B  E3 07                 END_WHILE:  JCXZ    RDMA_OVERLAP            ;TRANSFER TO TEMP BUFFER
023D  89 0E 0114 R                      MOV     (NO_OF_SECTS),CX        ;LOAD SECTORS UP TO
                                                                        ;DMA OVERLAP
0241  59                                POP     CX
0242  EB 8D                             JMP     RETRY_ENTRY
0244  06                   RDMA_OVERLAP: PUSH    ES                      ;SAVE DTA SEGMENT
0245  57                                PUSH    DI                      ;SAVE DTA OFFSET
0246  8C C8                             MOV     AX,CS
0248  8E C0                             MOV     ES,AX                   ;SET ES = CS
024A  BF 0450 R                         MOV     DI,OFFSET TEMP_BUFFER ;DTA = TEMP_BUFFER
024D  C7 06 0114 R 0001                 MOV     (NO_OF_SECTS),1
0253  8A 16 0113 R                      MOV     DL,(DRIVE)
0257  8A 36 010F R                      MOV     DH,(CUPHD)
025B  8B 0E 0111 R                      MOV     CX,(CURTRK)
025F  8A E9                             MOV     CH,CL
0261  8A 0E 0110 R                      MOV     CL,(CURSEC)
0265  A1 0114 R                         MOV     AX,(NO_OF_SECTS)        ;NO OF SECTORS IN AL
0268  87 DF                             XCHG    BX,DI                   ;BX IS BUFFER OFFSET
                                                                        ;FOR BIOS
026A  B4 02                             MOV     AH,2                    ;READ FUNCTION REQUIRED
026C  CD 13                             INT     13H                     ;BIOS DISK CALL
                                ;TRAP ERRORS HERE I.E. CHECK CARRY AND RESET AND RETRY
026E  87 DF                             XCHG    BX,DI                   ;DI AND BX RESTORED
0270  8B 0E 040B R                      MOV     CX,WORD PTR DRVBPB      ;LOOP COUNT = SECTOR
                                                                        ;LENGTH
0274  5F                                POP     DI                      ;RESTORE DTA SEGMENT
0275  07                               POP     ES                      ;RESTORE DTA OFFSET
0276  73 0C                             JNC     RDMA_OVERLAP1           ;JUMP IF NO ERROR
0278  FE 0E 0116 R                      DEC     (RETRY_CNT)
027C  74 14                             JZ      ERROR_EXIT
```

```
027E  B4 00                         MOV     AH,0
0280  CD 13                         INT     13H             ;RESET FDC
0282  EB C0                         JMP     RDMA_OVERLAP    ;TRY AGAIN
0284  56                RDMA_OVERLAP1: PUSH   SI
0285  BE 0450 R                     MOV     SI,OFFSET TEMP_BUFFER
0288  57                            PUSH    DI
0289  FC                            CLD                     ;SET AUTO INCREMENT
028A  F3/ A4                        REP     MOVSB           ;TEMP TO PROPER BUFFER
028C  5F                            POP     DI
028D  5E                            POP     SI              ;RESTORE INDEX REGISTERS
028E  59                            POP     CX
028F  E9 01F0 R                     JMP     ERROR_RET

0292  80 FC 03    ERROR_EXIT:       CMP     AH,3            ;WRITE PROTECT ?
0295  75 05                         JNZ     NR
0297  B0 00                         MOV     AL,0
0299  EB 35 90                      JMP     BE
029C  80 FC 80    NR:               CMP     AH,80H          ;TIME OUT-NOT READY
029F  75 05                         JNZ     CRC
02A1  B0 02                         MOV     AL,2
02A3  EB 2B 90                      JMP     BE
02A6  80 FC 10    CRC:              CMP     AH,10H          ;CRC ERROR
02A9  75 05                         JNZ     SEEK
02AB  B0 04                         MOV     AL,4
02AD  EB 21 90                      JMP     BE
02B0  80 FC 40    SEEK:             CMP     AH,40H          ;SEEK ERROR
02B3  75 05                         JNZ     SECT
02B5  B0 06                         MOV     AL,6
02B7  EB 17 90                      JMP     BE
02BA  80 FC 04    SECT:             CMP     AH,4
02BD  75 05                         JNZ     CMD
02BF  B0 08                         MOV     AL,8            ;SECTOR NOT FOUND
02C1  EB 0D 90                      JMP     BE
02C4  80 FC 01    CMD:              CMP     AH,1
02C7  75 05                         JNZ     GF
02C9  B0 03                         MOV     AL,3            ;GENERAL FAILURE
02CB  EB 03 90                      JMP     BE
02CE  B0 0C       GF:               MOV     AL,0CH
02D0  F8          BE:               CLC
02D1  F5                            CMC                     ;SET CARRY FLAG
02D2  59                            POP     CX
02D3  C3                            RET


02D4              DISKWRT:
                                    ASSUME  DS : CODE
02D4  8B 0E 0100 R                  MOV     CX,(SECCNT)     ;STORE NO OF SECS
02D8  C6 06 0116 R 04 WRTLP:        MOV     (RETRY_CNT),NO_OF_TRIES ;INITIALISE RETRY
02DD  E8 03C0 R                     CALL    PRESET
02E0  51                            PUSH    CX
02E1  57                            PUSH    DI              ;SAVE ORIGINAL VALUE
02E2  B1 04                         MOV     CL,4            ;ROTATE COUNTER
02E4  D3 EF                         SHR     DI,CL           ;DIVIDE DI BY 16
02E6  50                            PUSH    AX
02E7  8C C0                         MOV     AX,ES
02E9  03 C7                         ADD     AX,DI           ;UPDATE VALUE OF ES
```

```
02EB  8E C0                                   MOV         ES,AX
02ED  58                                      POP         AX                      ;RESTORE AX
02EE  5F                                      POP         DI                      ;RESTORE DI
02EF  81 E7 000F                              AND         DI,0000000000001111B ;LEAVE REMAINDER IN DI

                        ;SET UP PARAMETERS FOR BIOS CALL
02F3  8A 16 0113 R      WRETRY_ENTRY:         MOV         DL,[DRIVE]              ;DRIVE NUMBER
02F7  8A 36 010F R                            MOV         DH,[CURHD]              ;READ NUMBER
02FB  8B 0E 0111 R                            MOV         CX,[CURTRK]             ;TRACK NUMBER
02FF  8A E9                                   MOV         CH,CL
0301  8A 0E 0110 R                            MOV         CL,[CURSEC]             ;SECTOR NUMBER
0305  A1 0114 R                               MOV         AX,[NO_OF_SECTS]        ;NO OF SECTORS IN AL
0308  87 DF                                   XCHG        BX,DI                   ;BX IS BUFFER OFFSET
                                                                                  ;FOR BIOS
030A  B4 03                                   MOV         AH,3                    ;WRITE FUNCTION REQUIRED
030C  CD 13                                   INT         13H                     ;BIOS DISK CALL
                        ;TRAP ERRORS HERE I.E. CHECK CARRY AND RESET AND RETRY
030E  87 DF                                   XCHG        BX,DI                   ;DI AND BX RESTORED
0310  72 25                                   JC          WBIOS_ERROR
0312  59               WERROR_RET:           POP         CX                      ;RESTORE COUNTER
0313  52                                      PUSH        DX                      ;PREPARE TO MULTIPLY
0314  8B 16 040B R                            MOV         DX,WORD PTR DRVBPB      ;LOAD SECTOR SIZE
0318  A1 0114 R                               MOV         AX,[NO_OF_SECTS] ;AL HAS NO OF SECTS LOADED
031B  F7 E2                                   MUL         DX                      ;NUMBER OF BYTES LOADED
031D  5A                                      POP         DX
031E  03 F8                                   ADD         DI,AX                   ;UPDATE POINTER
                        ;NOTE IT IS ACTUALLY THE NO OF SECTORS X SECTOR SIZE
0320  A0 0110 R                               MOV         AL,[CURSEC]
0323  B4 00                                   MOV         AH,0
0325  03 06 0114 R                            ADD         AX,[NO_OF_SECTS]
0329  A2 0110 R                               MOV         [CURSEC],AL
032C  2B 0E 0114 R                            SUB         CX,[NO_OF_SECTS]
0330  83 F9 00                                CMP         CX,0
0333  7F A3                                   JG          WRTLP
0335  F8                                      CLC                                 ;CLEAR CARRY FLAG
0336  C3                                      RET
0337  80 FC 09                WBIOS_ERROR:   CMP         AH,9                    ;IS DMA ERROR ?
033A  74 0C                                   JZ          WDMA_ERROR
033C  FE 0E 0116 R                            DEC         [RETRY_CNT]
0340  74 7B                                   JZ          ERROR_EXIT1
0342  B4 00                                   MOV         AH,0
0344  CD 13                                   INT         13H                     ;RESET FDC
0346  EB AB                                   JMP         WRETRY_ENTRY
0348  51                    WDMA_ERROR:      PUSH        CX
0349  8C C0                                   MOV         AX,ES                   ;LOAD SEGMENT IN USE
034B  B1 04                                   MOV         CL,4                    ;ROTATE COUNTER
034D  D3 E0                                   SHL         AX,CL                   ;MULTIPLY BY 16
034F  03 C7                                   ADD         AX,DI
0351  B9 0000                                 MOV         CX,0                    ;INITIALISE COUNTER
0354  03 06 040B R            WWHILE:         ADD         AX,WORD PTR DRVBPB      ;ADD SECTOR LENGTH
0358  72 03                                   JC          END_WWHILE
035A  41                                      INC         CX                      ;INCREMENT COUNTER
035B  EB F7                                   JMP         WWHILE
035D  E3 07                   END_WWHILE:     JCXZ        WDMA_OVERLAP            ;TRANSFER TO TEMP BUFFER
035F  89 0E 0114 R                            MOV         [NO_OF_SECTS],CX        ;LOAD SECTORS UP TO
                                                                                  ;DMA OVERLAP
0363  59                                      POP         CX
0364  EB 8D                                   JMP         WRETRY_ENTRY
```

```
0366  06                        WDMA_OVERLAP:   PUSH    ES                      ;SAVE DTA SEGMENT
0367  57                                        PUSH    DI                      ;SAVE DTA OFFSET
0368  1E                                        PUSH    DS                      ;SAVE DS
0369  8C C0                                     MOV     AX,ES
036B  8E D8                                     MOV     DS,AX                   ;SET DS = ES
036D  8C C8                                     MOV     AX,CS
036F  8E C0                                     MOV     ES,AX                   ;SET ES = CS
0371  56                                        PUSH    SI
0372  8B F7                                     MOV     SI,DI
0374  BF 0450 R                                 MOV     DI,OFFSET TEMP_BUFFER ;DTA = TEMP_BUFFER
0377  2E: 8B 0E 040B R                          MOV     CX,WORD PTR CS : DRVBPB ;LOOP COUNT = SECTOR
                                                                              ;LENGTH
037C  FC                                        CLD                           ;SET AUTO INCREMENT
037D  F3/ A4                                    REP     MOVSB                 ;PROPER BUFFER TO TEMP
037F  5E                                        POP     SI
0380  1F                                        POP     DS
0381  BF 0450 R                   WDMA_OVERLAP2: MOV     DI,OFFSET TEMP_BUFFER ;DTA = TEMP_BUFFER
0384  C7 06 0114 R 0001                         MOV     (NO_OF_SECTS),1
038A  8A 16 0113 R                              MOV     DL,(DRIVE)
038E  8A 36 010F R                              MOV     DH,(CURHD)
0392  8B 0E 0111 R                             MOV     CX,(CURTRK)
0396  8A E9                                     MOV     CH,CL
0398  8A 0E 0110 R                             MOV     CL,(CURSEC)
039C  A1 0114 R                                 MOV     AX,(NO_OF_SECTS)      ;NO OF SECTORS IN AL
039F  87 DF                                     XCHG    BX,DI                 ;BX IS BUFFER OFFSET
                                                                              ;FOR BIOS
03A1  B4 03                                     MOV     AH,3                  ;WRITE FUNCTION REQUIRED
03A3  CD 13                                     INT     13H                   ;BIOS DISK CALL
                          ;TRAP ERRORS HERE I.E. CHECK CARRY AND RESET AND RETRY
03A5  87 DF                                     XCHG    BX,DI                 ;DI AND BX RESTORED
03A7  73 0C                                     JNC     WDMA_OVERLAP1         ;JUMP IF NO ERROR
03A9  FE 0E 0116 R                              DEC     (RETRY_CNT)
03AD  74 0C                                     JZ      FIX_STACK             ;POP STACK IF ERROR EXIT
03AF  B4 00                                     MOV     AH,0
03B1  CD 13                                     INT     13H                   ;RESET FDC
03B3  EB CC                                     JMP     WDMA_OVERLAP2         ;TRY AGAIN
03B5  5F                        WDMA_OVERLAP1:  POP     DI                    ;RESTORE DTA SEGMENT
03B6  07                                        POP     ES                    ;RESTORE DTA OFFSET
03B7  59                                        POP     CX
03B8  E9 0312 R                                 JMP     WERROR_RET

03BB  5F                        FIX_STACK:      POP     DI
03BC  07                                        POP     ES
03BD  E9 0292 R                 ERROR_EXIT1:    JMP     ERROR_EXIT

03C0                            PRESET:
                                                ASSUME DS : NOTHING
03C0  2E: A0 0110 R                             MOV     AL,(CURSEC)
03C4  2E: 3A 47 0D                              CMP     AL,CS : (BX).SECLIM
03C8  76 1F                                     JBE     GOTSEC
03CA  2E: 8A 36 010F R                          MOV     DH,(CURHD)
03CF  FE C6                                     INC     DH
03D1  2E: 3A 77 0F                              CMP     DH,CS : (BX).HDLIM
03D5  72 07                                     JB      SETHEAD               ;SELECT NEW HEAD
03D7  32 F6                                     XOR     DH,DH                 ;SELECT HEAD ZERO
03D9  2E: FF 06 0111 R                          INC     (CURTRK)              ;ADVANCE TO NEXT TRACK
03DF  2E: 88 36 010F R          SETHEAD:        MOV     (CURHD),DH            ;STORE HEAD NUMBER
```

```
03E3  B0 01                        MOV     AL,1                ;SET TO SECTOR 1
03E5  2E: A2 0110 R                MOV     [CURSEC],AL         ;STORE SECTOR NUMBER
03E9  52              GOTSEC:      PUSH    DX                  ;MAKE A WORK REGISTER
03EA  B4 00                        MOV     AH,0                ;START SECTOR IN AX
03EC  8B D0                        MOV     DX,AX               ;START SECTOR IN DX
03EE  03 D1                        ADD     DX,CX               ;ADD TOTAL NUMBER OF
                                                               ;SECTORS TO BE
                                                               ;TRANSFERRED
03F0  2E: 3B 57 0D                 CMP     DX,CS : [BX].SECLIM
03F4  76 0E                        JBE     ELSE
03F6  2E: 8B 57 0D                 MOV     DX,CS : [BX].SECLIM
03FA  2B D0                        SUB     DX,AX
03FC  42                           INC     DX
03FD  2E: 89 16 0114 R             MOV     [NO_OF_SECTS],DX    ;NO_OF_SECTS:=
                                                               ;SECTOR_LIMIT -
                                                               ;START_SECTOR + 1
0402  5A                           POP     DX
0403  C3                          RET
0404  2E: 89 0E 0114 R  ELSE:      MOV     [NO_OF_SECTS],CX
0409  5A                          POP     DX
040A  C3                          RET

040B  0200             DRVBPB:     DW      512                 ;SECTOR SIZE IN BYTES
040D  02                           DB      2                   ;SECTORS PER ALLOCATION
                                                               ;UNIT
040E  0001                         DW      1
0410  02                           DB      2
0411  0070                        DW      112
0413  02D0                        DW      9*40*2
0415  FD                          DB      11111101B
0416  0002                        DW      2
0418  0009                        DW      9
041A  0002                        DW      2
041C  040B R           INITAB      DW      DRVBPB
041E  040B R                       DW      DRVBPB
0420  040B R                       DW      DRVBPB
0422  040B R                       DW      DRVBPB
0424  040B R                       DW      DRVBPB
0426  040B R                       DW      DRVBPB
0428  040B R                       DW      DRVBPB
042A  040B R                       DW      DRVBPB
042C  040B R                       DW      DRVBPB
042E  040B R                       DW      DRVBPB
0430  040B R                       DW      DRVBPB
0432  040B R                       DW      DRVBPB
0434  040B R                       DW      DRVBPB
0436  040B R                       DW      DRVBPB
0438  040B R                       DW      DRVBPB
043A  040B R                       DW      DRVBPB
043C  040B R                       DW      DRVBPB
043E  040B R                       DW      DRVBPB
0440  040B R                       DW      DRVBPB
0442  040B R                       DW      DRVBPB
0444  040B R                       DW      DRVBPB
0446  040B R                       DW      DRVBPB
0448  040B R                       DW      DRVBPB
044A  040B R                       DW      DRVBPB
```

```
044C  040B R                          DW          DRVBPB
044E  040B R                          DW          DRVBPB

0450  0200 (                TEMP_BUFFER    DB          512     DUP(?)     ;TEMPORARY SECTOR BUFFER
                 ??
                     )


0650                         DRVSINIT:
                             ASSUME DS : CODE
0650  C5 1E 0025 R                    LDS         BX,(PTRSAV)
                             ASSUME DS : NOTHING
0654  B0 18                           MOV         AL,24
0656  88 47 0D                        MOV         BYTE PTR(BX).MEDIA,AL
0659  2E: A2 000A R                   MOV         (DRVMAX),AL
065D  C7 47 0E 0650 R                 MOV         WORD PTR(BX).TRANS,OFFSET DRVSINIT
0662  8C 4F 10                        MOV         (BX).TRANS+2,CS
0665  C7 47 12 041C R                 MOV         WORD PTR(BX).COUNT,OFFSET INITAB
066A  8C 4F 14                        MOV         (BX).COUNT+2,CS
066D  E9 0077 R                       JMP         EXIT
0670                         CODE ENDS
                             END

Segments and Groups:

                N a m e                 Size    Align   Combine Class

CODE . . . . . .                0670    PARA    NONE

Symbols:

                N a m e                 Type    Value   Attr

BF . . . . . .                  L NEAR  0200    CODE
BIOS_ERROR . . . . . .          L NEAR  0215    CODE
BUILDBP. . . . . .              L NEAR  00AB    CODE
CMD. . . . . .                  L NEAR  02C4    CODE
CMDC . . . . . .                Number  0002
CMDERR . . . . . .              L NEAR  0067    CODE
CMDERRP. . . . . .              L NEAR  0066    CODE
CMDLEN . . . . . .              Number  0000
COUNT. . . . . .                Number  0012
CRC. . . . . .                  L NEAR  02A6    CODE
CURHD. . . . . .                L BYTE  010F    CODE
CURSEC . . . . . .              L BYTE  0110    CODE
CURTRK . . . . . .              L WORD  0111    CODE
CUR_DRV. . . . . .              L BYTE  010C    CODE
DISKRD . . . . . .              L NEAR  01B2    CODE
DISKWRT. . . . . .              L NEAR  02D4    CODE
DRIVE. . . . . .                L BYTE  0113    CODE
DRVSIN . . . . . .              L NEAR  0034    CODE
DRVSINIT . . . . . .            L NEAR  0650    CODE
DRVSREAD . . . . . .            L NEAR  0117    CODE
DRVSWRIT . . . . . .            L NEAR  0123    CODE
DRVBPB . . . . . .              L NEAR  040B    CODE
DRVDIV . . . . . .              L WORD  0000    CODE
DRVLIM . . . . . .              Number  0008
```

```
DRVMAX . . . . . .          L BYTE  000A    CODE
DRVTBL . . . . . .          L WORD  0008    CODE
DSK$IO . . . . . .          L NEAR  0120    CODE
DSKOX. . . . . .            L NEAR  0132    CODE
ELSE . . . . . .            L NEAR  0404    CODE
END_WHILE. . . . . .        L NEAR  023B    CODE
END_WWHILE . . . . . .      L NEAR  035D    CODE
ERR$CNT. . . . . .          L NEAR  0068    CODE
ERR$EXIT . . . . . .        L NEAR  0073    CODE
ERR1 . . . . . .            L NEAR  0079    CODE
ERROR_EXIT . . . . . .      L NEAR  0292    CODE
ERROR_EXIT1. . . . . .      L NEAR  038D    CODE
ERROR_RET. . . . . .        L NEAR  01F0    CODE
EXIT . . . . . .            L NEAR  0077    CODE
EXITP. . . . . .            F PROC  0077    CODE    Length =0014
FIX_STACK. . . . . .        L NEAR  03A8    CODE
GET$CFG. . . . . .          L NEAR  0096    CODE
GF . . . . . .              L NEAR  02CE    CODE
GOODID . . . . . .          L NEAR  00BB    CODE
GOTSEC . . . . . .          L NEAR  03E9    CODE
HAS1 . . . . . .            L NEAR  00E2    CODE
HAS8 . . . . . .            L NEAR  00D5    CODE
HDLIM. . . . . .            Number  000F
INITAB . . . . . .          L WORD  041C    CODE
INRANGE. . . . . .          L NEAR  0147    CODE
MEDIA. . . . . .            Number  000D
MEDIA$CHK. . . . . .        L NEAR  00BB    CODE
NO_OF_SECTS. . . . . .      L WORD  0114    CODE
NO_OF_TRIES. . . . . .      Number  0004
NR . . . . . .              L NEAR  029C    CODE
PRESET . . . . . .          L NEAR  03C0    CODE
PTRSAV . . . . . .          L DWORD 0025    CODE
RDLP . . . . . .            L NEAR  01B6    CODE
RDMA_ERROR . . . . . .      L NEAR  0226    CODE
RDMA_OVERLAP . . . . . .    L NEAR  0244    CODE
RDMA_OVERLAP1. . . . . .    L NEAR  0284    CODE
RETRY_CNT. . . . . .        L BYTE  0116    CODE
RETRY_ENTRY. . . . . .      L NEAR  0101    CODE
SECCNT . . . . . .          L WORD  010D    CODE
SECLIM . . . . . .          Number  000D
SECT . . . . . .            L NEAR  02BA    CODE
SEEK . . . . . .            L NEAR  02B0    CODE
SETBPB . . . . . .          L NEAR  009C    CODE
SETHEAD. . . . . .          L NEAR  03DE    CODE
SETUP. . . . . .            L NEAR  0135    CODE
SKIP_FORTY . . . . . .      L NEAR  018B    CODE
START. . . . . .            Number  0014
STATUS . . . . . .          Number  0003
STRATEGY . . . . . .        L NEAR  0029    CODE
STRAIN . . . . . .          F PROC  0029    CODE    Length =0008
TEMP_BUFFER. . . . . .      L BYTE  0450    CODE    Length =0200
TRANS. . . . . .            Number  000E
UNIT . . . . . .            Number  0001
WRITOS_ERROR. . . . . .     L NEAR  0337    CODE
WRMA_ERROR . . . . . .      L NEAR  0348    CODE
WRMA_OVERLAP . . . . . .    L NEAR  0366    CODE
WRMA_OVERLAP1. . . . . .    L NEAR  0385    CODE
```

```
WDMA_OVERLAP2. . . . . .        L NEAR  0381    CODE
WERROR_RET . . . . . .          L NEAR  0312    CODE
WHILE. . . . . .                L NEAR  0232    CODE
WRETRY_ENTRY . . . . . .        L NEAR  02F3    CODE
WRTLP. . . . . .                L NEAR  02D8    CODE
WWHILE . . . . . .              L NEAR  0354    CODE

47012 Bytes free

Warning Severe
Errors  Errors
0       0
```

APPENDIX N THE ENVISAGED FILE SERVER HARDWARE

The hardware required for the file-server of this star-bus network is described.

The network interface of the file-server should be fully self sufficient in so far as network management and control is concerned. The file-server as a whole can be considered as a multiprocessor environment where the one processor is dedicated to the network while the other(s) is dedicated to the mass storage system and possibly management of a cache. Communication between the two processors is by means of an input queue and an output queue which is maintained within the file-server processor's memory area. This memory area must obviously be accessed by both processors. A semaphore type system for the management of these queues would be required. Requests from the network would be submitted to the input queue of the file-server along with the appropriate data, if applicable. The file-server output would likewise be extracted from the output queue by the network processor

Each ray of the star shaped network requires a single SCC to provide the 1.5 Mbit per second data rate. These SCC's also require the use of DMA to sustain this data rate. A DMA controller such as the Intel 8237-5 would be capable of supporting four SCC's. The memory requirements of the network controller are not extensive since the only space really necessary is a buffer area capable of storing a track of data for each of the SCC's on the network. This would satisfy the situation where data movement is taking place simultaneously on all the SCC's at the same time.
The processor power required is not extensive but the Intel 80186 would be an ideal candidate for this application. A full 16 bit data bus is supported along with all the features pertaining to the 80188 described previously. This processor itself could provide a wide bandwidth DMA link

between the network processor memory and the file-server processor memory area.

Units built along these lines could be included in Multibus type file-servers or even in P.C.'s with a bus structure similar to the Olivetti M24 P.C. where it is possible to have a co-processor on the bus.

APPENDIX O EMULATION SOFTWARE

The software used during the testing of the emulator is described. The listing at the end of the appendix is divided into logical blocks for description purposes. Most of these blocks do however correspond to procedures in the software. A step by step description is not given since the principle aspects of the software have already been described and the listing is itself well commented.

Initialisation of the 80188 The initialisation of the parameters relevant to the emulation software in this appendix and Appendix P will be discussed in the order in which they appear.: UMCS - UPPER MEMORY CHIP SELECT The upper memory chip select line (UCS) of the 80188 is active from the location specified in the upper memory chip select up to location FFFFFH. After reset this line defaults to be active over 1K below FFFFFH. Since in this application we have a 8K EPROM which must be selected by the UCS line this register must be re-programmed. From the table in [4] if no wait states are required, as in this case, the value for UMCS is FE38H. I. this case the ready inputs on the CPU are also ignored. This modifies the 3 least significant bits of the above value. The 3rd least significant bit is set if the ready inputs are ignored. Hence the value FE3CH.

Registers such as UMCS form part of a control block that may be relocated within the I/O or memory map of the 80188. In this case the control block is not relocated from its reset position. The control block starts at FF00h in the I/C space. The UMCS register is at offset A0H from the control block base. Hence UMCSLOC (location of UMCS) is FFA0H.

In a similar manner to that described above, MPCS is programmed from a table in [4]. This register is for the mid-memory select lines MCS0-MCS3.

A 512K block, with an individual select size of 128K, is required. The ready bits (bits 0 to 3) in this register refer to the peripheral select lines PCS4 to PCS6. These bits are programmed as before, no wait states and ignore external ready inputs. Two additional bits are present MS and EX which are bits 6 and 7 respectively. MS is used to map the peripheral in the I/O or memory space. This is given the value 0 which places the peripherals in the I/O area. EX determines whether there are 7 peripheral select lines or if address lines A1 and A2 are latched on lines PCS5 and PCS6. EX is made 1 which selects 7 peripheral select lines. MPCS is therefore 01FCH and is located at offset A8H in the control block, hence MPCSLOC is FFA8H.

MMCS defines where the mid-memory block defined by MPCS starts as well as the ready bits for the mid-memory. The peculiarity of the 80188 chip select logic now rears its head. A 512K block can only start at one of two locations viz. 00000H or 80000H. This results in the mid-memory block either overlapping with the memory area that would be catered for by UCS if it is set at 80000H or with LCS (Lower Chip Select) if it starts at 00000H. In this application it is made to start at 00000H and therefore LCS is not and cannot in fact be used. For this reason if more than 512K of memory is used, the chip select lines have to be generated from UCS and the upper memory lines. Again no wait states are required and the ready inputs are ignored. MMCS is therefore 01FCH. This is located at offset A6H in the control block hence MMCSLOC is FFA6H.

PACS is used to control the peripheral chip select lines (PCS0 to PCS6). Each of these chip selects is active for one of the seven contiguous blocks of 128 bytes above a programmable base address. The only restrictions on the choice of base address is that it must be a multiple of 1K i.e. the lowest 10 bits are all 0. If the control block is in the I/O area then the addresses activated by the PCS lines must not coincide with the location of the control block. A start location of 0800H was

chosen. Two wait states are required for the Z8530 SCC's [9] but again the ready inputs are ignored. PACS has a value of 083EH. for the above mentioned conditions. This register is located at offset A4H in the control block hence PACSLOC is FFA4H.

The dynamic RAM devices require that each row of the chips be refreshed every 4 mS. There are 256 rows. If we use a method where the time between refresh cycles is constant. we require that a refresh cycle be performed every 15.625µs. (4mS/256). Timer 2 of the 80188 is programmed to request a DMA cycle from DMA channel 0 to satisfy this requirement.
Firstly programming the timer:-
Timer 2 was chosen to perform this task since eventhough its capabilities are less than the other two, it does have what is required. It is also the only timer with an internal DMA request. Two registers need to be programmed viz. the maximum count value and the mode/control word.

The maximum count value required to give the necessary DMA request spacing is calculated as follows. The system clock frequency is 8MHz therefore the maximum clock input frequency is 2 MHz. (Hardware characteristic)[4] Therefore T = 500ns. The count value is thus 15.625µs/500nS = 31.25. A count value of 31 will give a 15.5µs gap between refresh cycles which is acceptable. Hence T2MAXCNT is 31. This is loaded into location T2CNTALOC. The control word is set up so that the counter counts continuously, and interrupts from this counter are disabled. A number of other parameters are fixed as shown in [4]. This gives T2CONTW a value of C001H.

Programming DMA channel 0 will be discussed here eventhough the variables are only listed later. The DMA channel is programmed to perform memory to memory transfers. The source of these transfers is set initially at the base of the memory 00000H and is continuously incremented over the full 1Mbyte range. This has the required effect since the row addresses of the RAM chips are multiplexed from address lines A0 to A9 and thus

these change with each DMA cycle. All 256 rows are thus cycled through. The corresponding column addresses that may be generated are of no relevance. The destination address is fixed at a location in the EPROM range and hence the writes to this location have no effect. The terminal count is set to 65535. This gives the following values for the variables DMA0TC = 65535, DMA0DPU (upper four bits of the destination address) = FFFFH, DMA0DP = 0FFFFH, DMA0SP = 0000H, DMA0SPU = 0000H. The suffixes SP and DP refer to source pointer and destination pointer respectively. The control word for the DMA channel is set up according to these criteria: The destination address is in the memory area and must not be incremented or decremented, the source address is in the memory area and must be incremented, DMA activity must continue after the terminal count value has been reached, no interrupt must be generated when the terminal count value is reached, the transfers are source synchronised (SYN), select highest priority (P), DMA requests from timer 2 are enabled (TDRQ), and DMA activity must start immediately (ST/STOP).

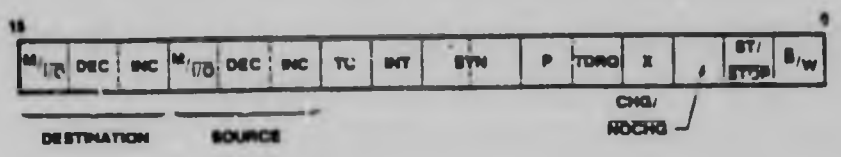

The first action taken after reset is to set the UCS line to FE000H and then a jump is made to this location where the remainder of the initialisation takes place.

The Memory Test The memory test does the following: The offset of each word is written into each word throughout the entire segment. The contents of each word, starting at the beginning of the segment, is compared with the offset of that word in the segment. These values should correspond. If they do not then the memory location at which the first mismatch occurs is faulty. A similar test is then performed except in this case the compliment of the address is written in each case. Again after the whole

these change with each DMA cycle. All 256 rows are thus cycled through. The corresponding column addresses that may be generated are of no relevance. The destination address is fixed at a location in the EPROM range and hence the writes to this location have no effect. The terminal count is set to 65535. This gives the following values for the variables DMA0TC = 65535, DMA0DPU (upper four bits of the destination address) = FFFFH, DMA0DP = 0FFFFH, DMA0SP = 0000H, DMA0SPU = 0000H. The suffixes SP and DP refer to source pointer and destination pointer respectively. The control word for the DMA channel is set up according to these criteria: The destination address is in the memory area and must not be incremented or decremented, the source address is in the memory area and must be incremented, DMA activity must continue after the terminal count value has been reached, no interrupt must be generated when the terminal count value is reached, the transfers are source synchronised (SYN), select highest priority (P), DMA requests from timer 2 are enabled (TDRQ), and DMA activity must start immediately (ST/STOP).

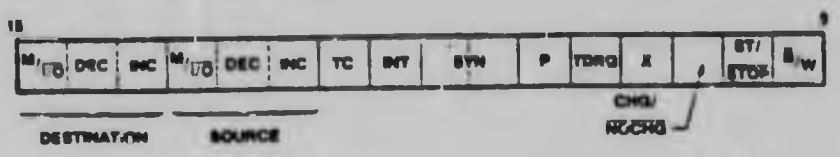

The first action taken after reset is to set the UCS line to FE000H and then a jump is made to this location where the remainder of the initialisation takes place.

The Memory Test The memory test does the following: The offset of each word is written into each word throughout the entire segment. The contents of each word, starting at the beginning of the segment, is compared with the offset of that word in the segment. These values should correspond. If they do not then the memory location at which the first mismatch occurs is faulty. A similar test is then performed except in this case the compliment of the address is written in each case. Again after the whole

segment has been written to, the contents are read and compared with the complimented offset. Again if a mismatch is found this memory location is faulty. In this way each bit in the whole segment is checked to see if it can be set and reset.

The code to do this test is shown in PROCedure TESTRAM in the assembler listing at the end of this appendix. The unusual exit from the procedure is necessary because the first time the routine is used, a jump has to be made to the routine instead of a call. There is nowhere to put the return address for a call instruction because the stack can only be set up after the memory is checked. The routine is therefore 'jumped' to check the top most 64K segment. If this memory is functioning the stack is set up at the upper end of this segment. All subsequent memory checks are made using a call to the routine. Each phase of the memory check is indicated on the diagnostic L.E.D.'s.

Initialisation and programming of the Z8530 SCC (Emulator SCC) The method of programming of this device and the initialisation required for the emulation software is described. This is done in the Z8530B_INIT procedure.

If we consider only one channel of the SCC on the hardware level we find that only two I/O locations are used. The SCC however has nine read registers and sixteen write registers. Some of these registers are shared by both channels [10]. Read register 0 and write register 0 can be accessed directly by the hardware by addressing the control register of that channel. Write register 0 has its four least significant bits that can be programmed as a 'vector' to a required register. If one wants to write to register 10 for example a write is first made to write register 0 to set up the 'vector' to register 10. A write is again made to the same I/O location with the data required for register 10. The 'vector' is then reset back to 0 after this write. Similarly a read from a register other than read register 0 requires a write to register 0 to set up the vector

followed by a read from register 0. The transmitter buffer (Write register 8) and receiver buffer (Read register 8) are exceptions to this rule and can be accessed directly by addressing the data register of the appropriate channel on the hardware level.

The SCC is programmed to function as a Bi - sync receiver / transmitter using NRZ coding. It obtains both its transmitter and receiver clocks from external sources. The Bi - sync mode was chosen so that two synchronisation characters could be specified and also since the bit-stuffing used in SDLC/HDLC communications is not desired.

The programming of the individual registers will be discussed along with the programming method.
The procedure called WR was written to perform the dual writes required for most of the registers as described above. This routine requires that the DX register of the CPU contain the address of the port to be written to, the AH register contain the required SCC register to be written to and AL contain the value to be written to the SCC.
The equates used in the assembler are the following:
Z8530BC - Control register of channel B of the emulator SCC.
Z8530BD - Data register of channel B of the emulator SCC.
Z8530BDREV - Data register of channel B of the emulator SCC but with the data bits reversed.

Because of the dual write programming described above it is possible that when one starts programming the SCC the 'vector' in register 0 is set pointing to some other register. Before the device can be programmed therefore it should be brought into a known state. (In this application this could be regarded as a redundant step since the SCC is reset on power up). By performing a write to register 0 requesting register 0 and then a read from register 0 we can be sure the pointer is set back to zero. If the case where the vector is zero initially is considered, by re-

questing register zero we have left the vector unchanged and the read will be from register 0. If the vector has some other value in it then the writing of a zero will put a zero in which ever register the vector was pointing to and reset the vector to 0.

The channel is reset and then configured.
The configuration selected is: x 1 clock mode, 16 bit synchronisation character, synchronous communications mode enabled, no parity.
The clock sources are: No XTAL i e. the internal oscillator of the SCC is not used, the receiver clock is input on the RTxC pin (from the MFM decoder), the transmitter clock is input on the TRxC pin (from the MFM encoder).
Register 10 has various control bits that are programmed as follows: The CRC generator and checker are preset to all ones, NRZ coding is to be used, a full 16 bit synchronisation character is required.
The control bits in register 14 are programmed to disable the Digital Phase Locked Loop in the SCC. All the interrupt enable bits in registers 1 and 15 are all disabled.
The initial synchronisation characters programmed are 4EH bytes corresponding to the contents of the gap 1. See Figure F1. Note that the bits of these characters are reversed since when they are written to the SCC they are not reversed by the hardware.
Finally the receiver error bits are reset. The transmitter and receiver themselves are not enabled until the track emulation routine is called. The actual CRC polynomial required is chosen by one of the bits that is in the same register as the transmitter enable bit. The required CRC is that used in SDLC communications viz. $x^{16} + x^{12} + x^5 + 1$ and is selected by resetting bit 2 of register 5.

A brief description of each of the remaining routines.

VEC_TBL_INIT Eventhough interrupts are not used in the software the interrupt vector table is initialised to a known state. Each of the vec-

tors, which consists of the segment and offset at which the interrupt routine resides, is directed to a dummy interrupt routine DUMMY_RET that merely returns to the point in the program at which the interrupt occurred.

NET_INIT Initialisation of the SCC channel consists of setting up the transmitter and receiver for SDLC communication. The DMA channel associated with the network is also initialised. Each of the parameters for both the SCC and the DMA controller are described in the order that they are used.

NET_CONFIG - x 1 clock, SDLC mode, synch modes enabled, no parity

NET_CLK_SOURCE - No xtal, Receive clock = RTxC PIN, Transmit clock = Output of the baud rate generator, TRxC is an output and carries the transmit clock. (Note in the testing described the transmit clock was from an external source)

NET_CRC_MODE - Preset CRC to all 1's, NRZ coding, send flags on an idle line, send flags after a transmitter underrun, disable loop mode.

BBRGENLO and BBRGENHI - Divisors used for the baud rate generators. (Note the values used here give a lower transmission speed than that used in testing)

FLAG - Contains the SDLC flag character (7EH)

NET_ADDRESS - Address that the receiver will respond to if programmed to operate in address search mode.

DIS_INT - Set all the interrupt enable bits to disabled

NET_DISDPLL - Local loop-back disabled, no auto echo, set baud rate generator source to the SCC clock input and enable the baud rate generator.

NET_RX_CONFIG - 8 character bits, all other functions disabled

DMA1TC - DMA terminal count set to 1 less than the network packet length.

DMA1DPU - Upper four bits of the destination pointer set to zero.

DMA1DP - Destination of DMA transfers set as the data register of the network SCC.

DMA1SPU - Upper four bits of the source pointer set to zero.

DMA1SP - Source of DMA transfers set to the NETWORK_PACKET address.

NETDMA1CW - The control word is set up as follows - Destination in I/O map and address to remain unchanged, source in memory area and must be incremented after each transfer, DMA activity to cease after terminal count reached, no interrupt on terminal count, destination synchronisation (SYN), low priority channel (P), disable timer 2 DMA request (TDRQ), start immediately (ST/STOP).

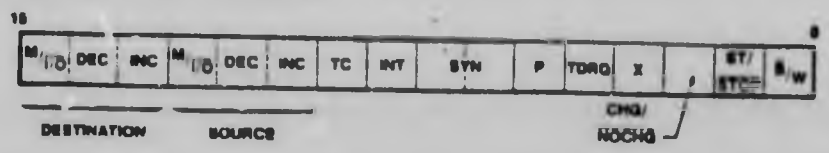

NET_TX_CONFIG - 8 bits per character, all other functions disabled.

NET_SEND This routine generates data for the test network packet and initiates its transmission from the SCC. The information included in the packet includes the address of the node to which the packet is being sent as well as the current variables from the emulator. The first data byte is loaded into the transmitter before resetting the EOM latch for the CRC transmission at the end of the packet. The DMA request function for the transmitter is also enabled.

TRACK_LIST_INIT The track cache index has to be initialised before use. In this case the 42 available data blocks are assigned to the two sides of the first 21 tracks of the disk. The drive number and application number are initialised to values that would not normally exist during the emulation process. The various records making up the index are initialised as well as the pointers to the respective data areas.

TRACK0_INIT This routine initialises track 0 on the emulator to the state that the corresponding track on a physical disk would be in immediately after formatting. Procedures FIRST, SECOND and SIXTH are used to initialise individual sectors to their required states. FIRST is used to fill the bootstrap sector (sector 1) and the second sectors of each of the File Allocation Tables with zeros i.e. sectors 3 and 5. SECOND gen-

erates the first sectors of each of the File Allocation Tables. SIXTH generates the contents of each of the sectors occupied by the directory.

SCAN_TRACK_LIST This routine returns a status whether a particular track that is required has been found or not. If the search is successful a pointer to the data area required in the variable TRACK_SEG. Parameters passed to the routine include the required drive, application number, track number and side number.

Note that in the assembler listing that follows a number of brackets that would normally be square have been replaced by round brackets for typographical reasons.

```
"8088"
                ASSUME      DS : DATA
                DATA
                ORG         00000000H
VEC_TABLE       DWS         512
SECTOR_NO       DB          0
TRACK_NO        DB          0
SIDE_NO         DB          0
TRACK_OFFSET    DW          0
TRACK_SEG       DW          0
TRACK_LIST      DBS         504             TRACK LIST
CURRENT_DRIVE   DB          0               DRIVE CURRENTLY BEING EMULATED
CURR_APPLN      DW          0               CURRENT APPLICATION BEING USED
SECTS_PER_TRACK DW          0               SECTORS PER TRACK
NETWORK_PACKET  DBS         20              NETWORK MESSAGE BUFFER

                PROC
JMPF            MACRO       &ARG1,&ARG2     MACRO TO IMPLEMENT A FAR JUMP
                DB          0EAH
                DW          &ARG1
                DW          &ARG2
                MEND
INSB            MACRO
                DB          6CH             80186 I/O INSTRUCTION
                MEND
OUTSB           MACRO
                DB          6EH             80186 I/O INSTRUCTION
                MEND
UMCSLOC         EQU         0FFA0H
UMCS            EQU         0FE3CH          NO WAIT STATES,8K EPROM,NO READY
MPCSLOC         EQU         0FFA8H
MPCS            EQU         0C08CH          A 512K BLOCK, 7 PERIPHERAL LINES,I/O MAPPED,
MMCSLOC         EQU         0FFA6H
MMCS            EQU         01FCH
PACSLOC         EQU         0FFA4H
PACS            EQU         083FH
T2CONTWLOC      EQU         0FF66H
T2CNTALOC       EQU         0FF62H
T2CNTLOC        EQU         0FF60H
T2CONTW         EQU         0C001H
T2MAXCNT        EQU         31              15.5 MICROSECONDS
OUTPORT         EQU         8100H
Z8530A2C        EQU         8082H
Z8530A2D        EQU         8083H
Z8530B2C        EQU         8080H
Z8530B2D        EQU         8081H
INPORT2         EQU         8180H           TRACK COUNTER
Z8530AC         EQU         8002H           CHANNEL A CONTROL REGISTER
Z8530AD         EQU         8003H           CHANNEL A DATA REGISTER
Z8530BC         EQU         8000H           CHANNEL B CONTROL REGISTER
Z8530BD         EQU         8001H           CHANNEL B DATA REGISTER
Z8530BDREV      EQU         8005H           CHANNEL B REVERSED DATA
Z8530ADREV      EQU         8007H           CHANNEL A REVERSED DATA
INTO_CONT_REG   EQU         0FF38H          INTERRUPT 0 CONTROL REGISTER
INT_MASK        EQU         0FF28H          INTERRUPT MASK REGISTER
INT_EOI         EQU         0FF22H          END OF INTERRUPT REGISTER
INT_REQ_REG     EQU         0FF2EH
```

```
REG0            EQU     00H             SCC REGISTERS
REG1            EQU     01H
REG2            EQU     02H
REG3            EQU     03H
REG4            EQU     04H
REG5            EQU     05H
REG6            EQU     06H
REG7            EQU     07H
REG8            EQU     08H
REG9            EQU     09H
REG10           EQU     0AH
REG11           EQU     0BH
REG12           EQU     0CH
REG13           EQU     0DH
REG14           EQU     0EH
REG15           EQU     0FH
DIS_INT         EQU     00H             DISABLE INTERRUPTS
CONFIG_B        EQU     00010000B       X1 CLK, 16 BIT SYNCH, SYNCH EN, NO PARITY
CONFIG_A        EQU     00010000B       X1 CLK, 16 BIT SYNCH, SYNCH EN, NO PARITY
BBRGENH         EQU     00H             REG13
BBRGENLO        EQU     25              REG             12
BCLK_SOURCE     EQU     00001000B       NO XTAL,RxCLK=RIxC PIN,TxCLK=TRxC PIN
ACLK_SOURCE     EQU     00001000B       NO XTAL,RxCLK=RIxC PIN,TxCLK=TRxC PIN
A_TX_EN         EQU     01101010B       DTR MUST BE 0,USED IN B
BBRGEN_EN       EQU     00000011B       REG14
DMAENABLE       EQU     11000000B       REG1 CHANNEL A
RESET_B         EQU     01000000B       RESET CHANNEL B
RESET_A         EQU     10000000B       RESET CHANNEL A
DISDPLL         EQU     01100000B       DISABLE DPLL
B_RX_EN         EQU     11000001B       8 BITS PER CHAR,Rx EN
B_TX_EN         EQU     01101010B       8 BITS PER CHAR, TX EN, SDLC CRC, RTS
TX_CRC_EN       EQU     00000001B       ENABLE TX CRC
DTR             EQU     10000000B       ASSERT DTR
RTSOFF          EQU     11111101B       DISABLE RTS
ENTER_HUNT      EQU     00010000B       ENTER HUNT MODE
RX_CRC_EN       EQU     00001000B       ENABLE CRC GENERATOR
RESET_TX_CRC    EQU     10000000B       RESET Tx CRC GENERATOR
RESET_EOM_LATCH EQU     11000000B       RESET EOM LATCH
SYNC_LD_INHIB   EQU     00000010B       INHIBIT SYNC LOADING
ERR_RESET       EQU     00110000B       RESET ERRORS
B_CRC_MODE      EQU     10000000B       NRZ,CRC PRESET = 1,8 BIT SYNCH
CHAR_READY      EQU     00000001B       RECEIVE BUFFER HAS A VALID CHARACTER
TX_BUFFER_EMPTY EQU     00000100B       TRANSMIT BUFFER IS READY FOR DATA
EOM             EQU     01000000B       END OF MESSAGE/TRANSMITTER UNDERRUN
SYNCHS          EQU     72H             SYNCH CHAR FOR TX (4EH)
SYNCHM          EQU     85H             SYNCH CHAR FOR RX (A1H)
NET_CLK_SOURCE  EQU     00010101B
NET_DISDPLL     EQU     00000011B
NET_ADDRESS     EQU     0A1H
FLAG            EQU     7EH
NET_CRC_MODE    EQU     10000000B
NET_TX_EN       EQU     00001000B
NET_TX_CONFIG   EQU     01100000B
ADDR_SEARCH     EQU     00000100B
NET_CONFIG      EQU     00110000B
NET_RX_CONFIG   EQU     11000000B
NET_RX_EN       EQU     00000001B
```

```
REG0            EQU             00H             SCC REGISTERS
REG1            EQU             01H
REG2            EQU             02H
REG3            EQU             03H
REG4            EQU             04H
REG5            EQU             05H
REG6            EQU             06H
REG7            EQU             07H
REG8            EQU             08H
REG9            EQU             09H
REG10           EQU             0AH
REG11           EQU             0BH
REG12           EQU             0CH
REG13           EQU             0DH
REG14           EQU             0EH
REG15           EQU             0FH
DIS_INT         EQU             00H             DISABLE INTERRUPTS
CONFIG_B        EQU             00010000B       X1 CLK, 16 BIT SYNCH, SYNCH EN, NO PARITY
CONFIG_A        EQU             00010000B       X1 CLK, 16 BIT SYNCH, SYNCH EN, NO PARITY
BBRGENH1        EQU             00H             REG13
BBRGENL0        EQU             25              REG             12
BCLK_SOURCE     EQU             00001000B       NO XTAL,RxCLK=RIxC PIN,TxCLK=IRxC PIN
ACLK_SOURCE     EQU             00001000B       NO XTAL,RxCLK=RIxC PIN,TxCLK=IRxC PIN
A_TX_EN         EQU             01101010B       DIR MUST BE 0,USED IN B
BBRGEN_EN       EQU             00000011B       REG14
DMAENABLE       EQU             11000000B       REG1 CHANNEL A
RESET_B         EQU             01000000B       RESET CHANNEL B
RESET_A         EQU             10000000B       RESET CHANNEL A
DISDPLL         EQU             01100000B       DISABLE DPLL
B_RX_EN         EQU             11000001B       8 BITS PER CHAR,Rx EN
B_TX_EN         EQU             01101010B       8 BITS PER CHAR, TX EN, SDLC CRC, RTS
TX_CRC_EN       EQU             00000001B       ENABLE TX CRC
DTR             EQU             10000000B       ASSERT DTR
RTSOFF          EQU             11111101B       DISABLE RTS
ENTER_HUNT      EQU             00010000B       ENTER HUNT MODE
RX_CRC_EN       EQU             00001000B       ENABLE CRC GENERATOR
RESET_TX_CRC    EQU             10000000B       RESET Tx CRC GENERATOR
RESET_EOM_LATCH EQU             11000000B       RESET EOM LATCH
SYNC_LD_INHIB   EQU             00000010B       INHIBIT SYNC LOADING
ERR_RESET       EQU             00110000B       RESET ERRORS
B_CRC_MODE      EQU             10000000B       NRZ,CRC PRESET = 1,8 BIT SYNCH
CHAR_READY      EQU             00000001B       RECEIVE BUFFER HAS A VALID CHARACTER
TX_BUFFER_EMPTY EQU             00000100B       TRANSMIT BUFFER IS READY FOR DATA
E_O_M           EQU             01000000B       END OF MESSAGE/TRANSMITTER UNDERRUN
SYNCHS          EQU             72H             SYNCH CHAR FOR TX (4EH)
SYNCHM          EQU             85H             SYNCH CHAR FOR RX (A1H)
NET_CLK_SOURCE  EQU             00010101B
NET_DISDPLL     EQU             00000011B
NET_ADDRESS     EQU             0A1H
FLAG            EQU             7EH
NET_CRC_MODE    EQU             10000000B
NET_TX_EN       EQU             00001000B
NET_TX_CONFIG   EQU             01100000B
ADDR_SEARCH     EQU             00000100B
NET_CONFIG      EQU             00110000B
NET_RX_CONFIG   EQU             11000000B
NET_RX_EN       EQU             00000001B
```

```
NODE_NO             EQU             2
MESSAGE_LENGTH      EQU             20
DMA0CWLOC           EQU             0FFCAH          EQUATES FOR DMA CHANNEL 0
DMA0TCLOC           EQU             0FFC8H
DMA0DPULOC          EQU             0FFC6H
DMA0DPLOC           EQU             0FFC4H
DMA0SPULOC          EQU             0FFC2H
DMA0SPLOC           EQU             0FFC0H
DMA0CW              EQU             1001010000111011OB
DMA0TC              EQU             0FFFFH
DMA0DPU             EQU             0FFFFH
DMA0DP              EQU             0FFFFH
DMA0SPU             EQU             0000H
DMA0SP              EQU             0000H
DMA1CWLOC           EQU             0FFDAH          EQUATES FOR DMA CHANNEL 1
DMA1TCLOC           EQU             0FFD8H
DMA1DPULOC          EQU             0FFD6H
DMA1DPLOC           EQU             0FFD4H
DMA1SPULOC          EQU             0FFD2H
DMA1SPLOC           EQU             0FFD0H
DMA1CW              EQU             0001010010000011OB
NET_DMA1CW          EQU             0001011010000011OB
DMA1TC              EQU             MESSAGE_LENGTH-1
DMA1DPU             EQU             0000H
DMA1DP              EQU             28530A20
DMA1SPU             EQU             00004
DMA1SP              EQU             0EFF0H          OFFSET NETWORK_PACKET + 1
DRIVE_NO_OFF        EQU             0               OFFSETS WITHIN RECORD STRUCTURE
APPL_NO_OFF         EQU             1               IN TRACK LIST
TRACK_NO_OFF        EQU             3
SIDE_NO_OFF         EQU             4
MASK_OFF            EQU             5
XBFREQ_OFF          EQU             6
XBAGE_OFF           EQU             8
DATA_POINTER_OFF    EQU             10
RECORD_LENGTH       EQU             12
CACHE_MASK          EQU             10000000B
WRITE_COUNT_MASK    EQU             C0001111B

                    ORG             0FFFF0000H      RESET LOCATION
                    MOV             DX,UMCSLOC
                    MOV             AX,UMCS
                    OUT             DX,AX           REPROGRAM UCS
                    JMPF            0000H,0FE00H    JUMP TO EPROM BASE

                    ORG             0FE000000H      EPROM BASE
                    MOV             DX,MPCSLOC      INITIALISE 80188 MEMORY MAP
                    MOV             AX,MPCS
                    OUT             DX,AX
                    MOV             DX,MMCSLOC
                    MOV             AX,MMCS
                    OUT             DX,AX
                    MOV             DX,PACSLOC
                    MOV             AX,PACS
                    OUT             DX,AX           INITIALISE 80188 I/O MAP
                    MOV             DX,T2CNTALOC    INITIALISE TIMER 2 FOR RAM REFRESH
                    MOV             AX,T2MAXCNT
```

```
                OUT     DX,AX
                MOV     DX,T2CONTWLOC
                MOV     AX,T2CONTW
                OUT     DX,AX
                MOV     DX,DMA0TCLOC    INITIALISE DMA CONTROLLER CHANNEL 0
                MOV     AX,DMA0TC       FOR RAM REFRESH
                OUT     DX,AX
                MOV     DX,DMA0DPULOC
                MOV     AX,DMA0DPU
                OUT     DX,AX
                MOV     DX,DMA0DPLOC
                MOV     AX,DMA0DP
                OUT     DX,AX
                MOV     DX,DMA0SPULOC
                MOV     AX,DMA0SPU
                OUT     DX,AX
                MOV     DX,DMA0SPLOC
                MOV     AX,DMA0SP
                OUT     DX,AX
                MOV     DX,DMA0CWLOC
                MOV     AX,DMA0CW
                OUT     DX,AX
                CLD
                MOV     AL,3            INDICATE ON L.E.D.'S THAT BLOCK 3 OF MEMORY
                MOV     DX,OUTPORT      IS TO BE TESTED
                OUT     DX,AL
                MOV     DX,3000H        SET DX TO THE LAST 64K SEGMENT OF MEMORY
                JMP     TESTRAM         JUMP TO RAMTEST
TESTRAM2        MOV     AX,3000H
                MOV     SS,AX           SET STACK SEGMENT TO END OF RAM
                MOV     SP,0FFFFH       SET POINTER TO LAST ADDRESS
                MOV     AL,2
                MOV     DX,OUTPORT      INDICATE ON L.E.D.'S THAT BLOCK 2 OF MEMORY
                OUT     DX,AL           IS TO BE TESTED
                MOV     DX,2000H        SET DX TO SECOND LAST 64K SEGMENT
                CALL    TESTRAM         CALL RAMTEST
                MOV     AL,1
                MOV     DX,OUTPORT      INDICATE ON L.E.D.'S THAT BLOCK 1 OF MEMORY
                OUT     DX,AL           IS TO BE TESTED
                MOV     DX,1000H        SET DX TO SECOND 64K SEGMENT
                CALL    TESTRAM         CALL RAMTEST
                MOV     AL,80H
                MOV     DX,OUTPORT      INDICATE THAT BLOCK 0 IS TO BE TESTED
                OUT     DX,AL
                MOV     DX,0000H        SET DX TO FIRST 64K BLOCK OF MEMORY
                CALL    TESTRAM         CALL RAMTEST
                CALL    VEC_TBL_INIT    INITIALIZE THE INTERRUPT VECTOR TABLE
                MOV     AX,0000H
                MOV     DS,AX           SET DS TO VARIABLES SEGMENT
                MOV     BYTE PTR(CURRENT_DRIVE),0FFH  INITIALIZE THESE VARIABLES TO VALUES THAT
                MOV     WORD PTR(CURR_APPLN),0FFFFH   WOULD NOT NORMALLY OCCUR
                CALL    TRACK_LIST_INIT INITILIZE THE TRACK CACHE INDEX
                CALL    TRACK0_INIT     INITIALIZE TRACK 0 OF THE CACHE
J2              CALL    Z8530B_INIT     INITIALIZE THE EMULATOR SCC
                CALL    NET_INIT        INITIALISE NETWORK
                MOV     AX,0000H        SET TO BASE OF RAM
                MOV     DS,AX           DATA SEGMENT FOR VARIABLES
```

```
                MOV     DX,Z8530BC
                MOV     AH,0            SET TO SIDE 0
                IN      AL,DX           READ SCC STATUS
                TEST    AL,00100000B    CHECK CTS (HEAD 1)
                JZ      SIDE0
                MOV     AH,1            SET TO SIDE 1
SIDE0           MOV     (SIDE_NO),AH    STORE SIDE NUMBER
READ_TRACK      MOV     DX,INPORT2      TRACK COUNTER PORT
                IN      AL,DX           READ TRACK REQUESTED
                MOV     (TRACK_NO),AL   STORE REQUIRED TRACK
                CMP     AL,40           IS TRACK 40 ?
                JZ      TRACK_40
                MOV     DX,OUTPORT      PUT TRACK NUMBER OUT ON L.E.D.'S
                OUT     DX,AL
                MOV     AH,(CURRENT_DRIVE)  GET PARAMETERS REQUIRED FOR THE INDEX SCAN
                MOV     BX,(CURR_APPLN)
                MOV     DL,AL
                MOV     DH,(SIDE_NO)
                CALL    SCAN_TRACK_LIST
                CMP     AH,0            WAS TRACK FOUND
                JNZ     J2
                MOV     BYTE PTR(SECTOR_NO),1  SET STARTING SECTOR NUMBER
                MOV     WORD PTR(SECTS_PER_TRACK),9  SET THE NUMBER OF SECTORS ON A TRACK
                CALL    TRACK_EM        EMULATE THE REQUIRED TRACK
                JMP     J2
TRACK_40:       MOV     WORD PTR(TRACK_SEG),0EFFH  SET DATA POINTER TO THE TRACK 40 MESSAGE BUFFER
                MOV     BYTE PTR(SECTS_PER_TRACK),1   SET THE NUMBER OF SECTORS ON A TRACK
                MOV     BYTE PTR(SECTOR_NO),1   SET THE STARTING SECTOR NUMBER
                CALL    NET_SEND        SEND NETWORK MESSAGE
                CALL    TRACK_EM        EMULATE TRACK FORTY
                JMP     J2

TESTRAM         PROC    NEAR
MEMTST          MOV     CX,08000H       SET COUNTER TO 32K WORDS
                MOV     ES,DX           SET EXTRA SEGMENT REGISTER TO SEGMENT BEING TESTED
                XOR     DI,DI           SET DESTINATION OFFSET TO 0
MEMTST_W1       MOV     AX,DI           SET DATA TO BE WRITTEN EQUAL TO THE OFFSET
                STOSW                   STORE AX AT OFFSET DI AND INCREMENT DI
                LOOP    MEMTST_W1       LOOP BACK
                MOV     DS,DX           SET DATA SEGMENT REGISTER TO SEGMENT BEING TESTED
                XOR     BX,BX           SET BX REGISTER TO 0
                MOV     CX,08000H       SET COUNTER TO 32K WORDS
MEMTST_R1       MOV     AX,(BX)         MOVE THE CONTENTS OF THE LOACTION AT OFFSET BX INTO AX
                CMP     AX,BX           ARE THE CONTENTS THE SAME AS THE OFFSET
                JNE     MEMTST_ERR      JUMP IF THEY ARE NOT THE SAME
                INC     BX              INCREMENT THE OFFSET
                INC     BX              TWICE SINCE READING WORDS
                LOOP    MEMTST_R1       LOOP BACK
                MOV     CX,08000H       SET COUNTER TO 32K WORDS
MEMTST_W2       MOV     AX,DI           SET DATA TO BE WRITTEN EQUAL TO THE OFFSET
                NOT     AX              INVERT THE DATA TO BE WRITTEN
                STOSW                   WRITE THE DATA
                LOOP    MEMTST_W2       LOOP BACK
                MOV     CX,08000H       SET COUNTER TO 32K WORDS
MEMTST_R2       MOV     AX,(BX)         READ CONTENTS AT OFFSET BX
                NOT     AX              INVERT THE DATA READ
                CMP     AX,BX           IS THIS DATA THE SAME AS THE OFFSET
```

```
                        JNE             MEMTST_ERR_C    JUMP IF THEY ARE NOT THE SAME
                        INC             BX              INCREMENT THE OFFSET TWICE
                        INC             BX
                        LOOP            MEMTST_R2       LOOP BACK
                        MOV             AX,0            SET DATA TO BE WRITTEN TO 0
                        MOV             CX,08000H       SET COUNTER TO 32K WORDS
                        REP             STOSW           FILL WITH ZEROS
                        OR              AX,AX
                        MOV             BX,DX           SAVE SEGMENT IN BX
                        MOV             DX,OUTPORT      WRITE STATUS SUCCESSFUL ON DIAGNOSTIC L.E.D.'S
                        MOV             AL,055H
                        OUT             DX,AL
                        OUT             DX,AL
                        CMP             BX,3000H        IF SEGMENT 3 HAS JUST BEEN TESTED THEN JUMP BACK
                        JZ              EXIT
                        RET                             OTHERWISE MERELY RETURN
EXIT                    JMP             TESTRAM2
MEMTST_ERR_C            NOT             AX              INVERT AX
                        NOT             BX              INVERT BX
MEMTST_ERR              XCHG            AX,BX           SWOP AX AND BX
                        MOV             DX,OUTPORT      SET PORT POINTER TO THE DIAGNOSTIC L.E.D.'S
                        OUT             DX,AL           SEND OUT LOW BYTE OF THE DATA READ
                        MOV             AL,AH
                        OUT             DX,AL           SEND OUT HIGH BYTE OF THE DATA READ
                        MOV             AX,BX
                        OUT             DX,AL           SEND OUT LOW BYTE OF DATA WRITTEN
                        MOV             AL,AH
                        OUT             DX,AL           SEND OUT HIGH BYTE OF DATA WRITTEN
                        MOV             AX,CX
                        OUT             DX,AL           SEND OUT LOW BYTE OF THE COUNTER VALUE
                        MOV             AL,AH
                        OUT             DX,AL           SEND OUT HIGH BYTE OF THE COUNTER VALUE
                        MOV             AX,ES
                        OUT             DX,AL           SEND OUT THE LOW BYTE OF THE SEGMENT BEING TESTED
                        MOV             AL,AH
                        OUT             DX,AL           SEND OUT THE HIGH BYTE OF THE SEGMENT BEING TESTED
                        MOV             AX,DI
                        OUT             DX,AL           SEND OUT LOW BYTE OF THE OFFSET OF THE FAULTY LOCATION
                        MOV             AL,AH
                        OUT             DX,AL           SEND OUT HIGH BYTE OF THE OFFSET OF THE FAULTY LOCATION
NEXT                    JMP             NEXT

Z8530B_INIT             PROC            NEAR
                        MOV             DX,Z8530BC      SET DX TO SCC CHANNEL B CONTROL REGISTER
                        MOV             AL,REG0
                        OUT             DX,AL
                        CALL            WAIT            WRITE RECOVERY TIME
                        IN              AL,DX           ENSURE POINTER IS AT REGISTER 0
                        CALL            WAIT
                        MOV             AH,REG9         SELECT REG 9
                        MOV             AL,RESET_B      RESET CHANNEL B
                        CALL            WR
                        MOV             AH,REG4         SELECT REG 4
                        MOV             AL,CONFIG_B     CONFIGURE CHANNEL B
                        CALL            WR
                        MOV             AH,REG11        SELECT REG 11
```

```
                MOV             AL,BCLK_SOURCE  SET UP CLOCK SOURCE
                CALL            WR
                MOV             AH,REG10        SELECT REG 10
                MOV             AL,B_CRC_MODE   PRESET CRC
                CALL            WR
                MOV             AH,REG14        SELECT REG 14
                MOV             AL,DISDPLL      DISABLE THE DPLL
                CALL            WR
                MOV             AH,REG15        SELECT REG 15
                MOV             AL,DIS_INT      DISABLE INTERRUPTS
                CALL            WR
                MOV             AH,REG1         SELECT REG 1
                MOV             AL,DIS_INT      DISABLE INTERRUPTS
                CALL            WR
                MOV             AH,REG6         SELECT REG 6
                MOV             AL,SYNCHS       PROGRAM SYNCH CHARACTER ( 4EH REVERSED )
                CALL            WR
                MOV             AH,REG7         SELECT REG 7
                MOV             AL,SYNCHS       PROGRAM SYNCH CHARACTER ( 4EH REVERSED )
                CALL            WR
                MOV             AL,ERR_RESET    RESET RECEIVER ERROR LATCH
                OUT             DX,AL
                RET

WR              PROC            NEAR            ;ASSUMES DX POINTS TO REQUIRED PORT
                                                ;AH IS REGISTER REQUIRED
                                                ;AL IS THE VALUE TO BE WRITTEN
                PUSH            AX              ;SAVE PARAMETERS
                CMP             AH,0            ;IS REG 0 REQD ?
                JZ              REG_WR
                MOV             AL,AH           ;GET REG REQD IN AL
                OUT             DX,AL           ;SELECT REGISTER
                CALL            WAIT            ;RECOVER
REG_WR:         POP             AX              ;RETREIVE PARAMETERS
                OUT             DX,AL           ;WRITE VALUE
                RET

WAIT            PROC            NEAR
                PUSH            CX
                MOV             CX,1
W1              LOOP            W1
                POP             CX
                RET

VEC_TBL_INIT    PROC            NEAR
                PUSH            DS              SAVE DS
                MOV             AX,SEG VEC_TABLE
                MOV             DS,AX           SET DS TO BASE SEGMENT
                MOV             BX,SEG DUMMY_RET LOAD BX WITH SEGMENT OF THE DUMMY ROUTINE
                MOV             AX,OFFSET DUMMY_RET LOAD AX WITH THE OFFSET OF THE DUMMY ROUTINE
                MOV             SI,0             SET POINTER TO BASE
                MOV             CX,255          255 VECTORS TO BE WRITTEN
INIT_LOOP:      MOV             DS:[SI],AX         SAVE ROUTINE IP
                INC             SI
                INC             SI
                MOV             DS:[SI],BX         SAVE ROUTINE CS
                INC             SI
```

```
                INC             SI
                LOOP            INIT_LOOP
                POP             DS              RESTORE DS
                RET

DUMMY_RET       PROC            FAR
                PUSH            DX
                PUSH            AX
                MOV             AL,0FH
                MOV             DX,OUTPORT
                OUT             DX,AL
                POP             AX
                POP             DX
                IRET            RETURN FROM INTERRUPT

NET_INIT        PROC            NEAR
                MOV             DX,28530A2C ;DX TO CHANNEL A CONTROL REGISTER
                MOV             AL,REG0
                OUT             DX,AL
                CALL            WAIT            ;WRITE RECOVERY TIME
                IN              AL,DX           ;ENSURE POINTER IS AT REG 0
                CALL            WAIT
                MOV             AH,REG9         ;SELECT REG 9
                MOV             AL,RESET_A      ;RESET CHANNEL A
                CALL            WR
                MOV             AH,REG4         ;SELECT REG 4
                MOV             AL,NET_CONFIG ;CONFIGURE CHANNEL
                CALL            WR
                MOV             AH,REG11        ;SELECT REG 11
                MOV             AL,NET_CLK_SOURCE ;SET UP CLOCK SOURCE
                CALL            WR
                MOV             AH,REG10        ;SELECT REG 10
                MOV             AL,NET_CRC_MODE ;PRESET CRC
                CALL            WR
                MOV             AH,REG12        ;SELECT REG 12
                MOV             AL,BBRGENLO ;BAUD DIVISOR (LO)
                CALL            WR
                MOV             AH,REG13        ;SELECT REG 13
                MOV             AL,BBRGENHI ;BAUD DIVISOR (HI)
                CALL            WR
                MOV             AH,REG7         ;SELECT REG 7
                MOV             AL,FLAG         ;SDLC FLAG
                CALL            WR
                MOV             AH,REG6         ;SELECT REG 6
                MOV             AL,NET_ADDRESS ;ADDRESS OF RECEIVER
                CALL            WR
                MOV             AH,REG15        ;SELECT REG 15
                MOV             AL,DIS_INT
                CALL            WR
                MOV             AH,REG14        ;SELECT REG 14
                MOV             AL,NET_DISDPLL
                CALL            WR
                MOV             AH,REG3         ;SELECT REG 3
                MOV             AL,NET_RX_CONFIG ;CONFIGURE RECEIVER
                CALL            WR
                MOV             DX,DMAITCLOC
                MOV             AX,DMAITC
```

```
                OUT             DX,AX
                MOV             DX,DMA1DPULOC
                MOV             AX,DMA1DPU
                OUT             DX,AX
                MOV             DX,DMA1DPLOC
                MOV             AX,DMA1DP
                OUT             DX,AX
                MOV             DX,DMA1SPULOC
                MOV             AX,DMA1SPU
                OUT             DX,AX
                MOV             DX,DMA1SPLOC
                MOV             AX,DMA1SP
                OUT             DX,AX
                MOV             DX,DMA1CWLOC
                MOV             AX,NET_DMA1CW
                OUT             DX,AX
                MOV             DX,Z8530A2C
                MOV             AH,REG5         ;SELECT REG 5
                MOV             AL,NET_TX_CONFIG ;CONFIGURE TX
                OR              AL,NET_TX_EN     ;ENABLE TRANSMITTER
                OR              AL,TX_CRC_EN     ;ENABLE CRC GEN
                CALL            WR
                MOV             AH,REG0         ;SELECT REG 0
                MOV             AL,ERR_RESET ;RESET RX ERRORS
                OR              AL,RESET_TX_CRC ;RESET Tx CRC GEN
                CALL            WR
                RET

NET_SEND        PROC            NEAR
                PUSH            DS
                PUSH            AX
                MOV             AX,0
                MOV             DS,AX
                MOV             BYTE PTR[NETWORK_PACKET](0),NET_ADDRESS
                MOV             BYTE PTR[NETWORK_PACKET](1),NODE_NO
                MOV             AL,[CURRENT_DRIVE]
                MOV             BYTE PTR[NETWORK_PACKET](2),AL
                MOV             AX,[CURR_APPLN]
                MOV             WORD PTR[NETWORK_PACKET](3),A
                MOV             AL,[TRACK_NO]
                MOV             BYTE PTR[NETWORK_PACKET](5),AL
                MOV             AL,[SIDE_NO]
                MOV             BYTE PTR[NETWORK_PACKET](6),AL
                MOV             DX,Z8530A2D
                MOV             AL,NET_ADDRESS
                OUT             DX,AL
                MOV             DX,Z8530A2C
                MOV             AH,REG0
                MOV             AL,RESET_EOM_LATCH
                CALL            WR
                CALL            WAIT
                MOV             AH,REG1         ;SELECT REG 1
                MOV             AL,DMAENABLE ;ENABLE DMA REQUEST FUNCTION
                CALL            WR
                POP             AX
                POP             DS
                RET
```

```
                INCLUDE         TRACKEM:LAN             INCLUDE TRACK EMULATION CODE

TRACK_LIST_INIT PROC            NEAR
                ASSUME          DS:DATA,CS:PROG ASSUMES DS = 0
                MOV             CX,42                   42 SIDES TO BE INITIALISED
                MOV             SI,0                    INITIALISE INDEX
                MOV             AX,4096                 INITIALISE SEGMENT
TRACK_INIT_LP:  MOV             BYTE PTR[TRACK_LIST][SI+DRIVE_NO_OFF],0FFH
                MOV             WORD PTR[TRACK_LIST][SI+APPL_NO_OFF],0FFFFH
                PUSH            CX
                DEC             CL
                CLC
                RCR             CL,1
                JC              SIDE_ONE
                MOV             BYTE PTR[TRACK_LIST][SI+SIDE_NO_OFF],0
                JMP             TRK_NO
SIDE_ONE:       MOV             BYTE PTR[TRACK_LIST][SI+SIDE_NO_OFF],1
TRK_NO:         MOV             [TRACK_LIST][SI+TRACK_NO_OFF],CL
                POP             CX
                MOV             BYTE PTR[TRACK_LIST][SI+MASK_OFF],0
                MOV             WORD PTR[TRACK_LIST][SI+XBFREQ_OFF],0
                MOV             WORD PTR[TRACK_LIST][SI+XBAGE_OFF],0
                MOV             WORD PTR[TRACK_LIST][SI+DATA_POINTER_OFF],AX
                ADD             AX,288
                ADD             SI,RECORD_LENGTH
                LOOP            TRACK_INIT_LP
                RET

TRACK0_INIT     PROC            NEAR
                MOV             AH,[CURRENT_DRIVE] ASSUMES DS = 0
                MOV             BX,[CURR_APPLN]
                MOV             DI,0                    TRACK 0
                MOV             DH,0                    SIDE 0
                CALL            SCAN_TRACK_LIST
                MOV             AX,[TRACK_SEG]
                MOV             ES,AX
                MOV             DS,AX
                CLD
                XOR             DI,DI
                CALL            FIRST
                CALL            SECOND
                CALL            FIRST
                CALL            SECOND
                CALL            FIRST
                CALL            SIXTH
                CALL            SIXTH
                CALL            SIXTH
                CALL            SIXTH
                MOV             AX,0000H
                MOV             DS,AX
                MOV             AH,[CURRENT_DRIVE]
                MOV             BX,[CURR_APPLN]
                MOV             DI,0                    TRACK 0
                MOV             DH,1                    SIDE 1
                CALL            SCAN_TRACK_LIST
```

```
                MOV     AX,(TRACK_SEG)
                MOV     ES,AX
                MOV     DS,AX
                XOR     DI,DI           SET INDEX TO 0
                CALL    SIXTH
                CALL    SIXTH
                CALL    SIXTH
                RET

FIRST           PROC    NEAR
                MOV     AL,00H
                MOV     CX,512
                REP     STOSB
                RET

SECOND          PROC    NEAR
                MOV     AL,0FDH         MEDIA DESCRIPTOR
                STOSB
                MOV     AL,0FFH
                STOSB
                STOSB
                MOV     AL,0CH
                MOV     CX,509          REMAINDER OF SECTOR
                REP     STOSB
                RET

SIXTH           PROC    NEAR
                MOV     CX,16           NO. OF DIRECTORIES PER SECTOR
S1:             PUSH    CX
                CALL    DIREC
                POP     CX
                LOOP    S1
                RET

DIREC           PROC    NEAR
                MOV     AL,001
                STOSB
                MOV     AL,0F6H
                MOV     CX,31
                REP     STOSB
                RET

SCAN_TRACK_LIST PROC    NEAR            ;ASSUMES DS = 0, AH = REQD DRIVE
                                        ;BX = REQD APPL NO, DL = REQD TRACK NO
                                        ;DH = REQD SIDE NO
                MOV     SI,0
                MOV     CX,42           ;LOAD COUNTER WITH MAX NO OF SIDES
DRIVE:          CMP     BYTE PTR(TRACK_LIST)(SI+DRIVE_NO_OFF),AH
                JZ      APPL_NO
                JMP     NEXT_ENTRY
APPL_NO:        CMP     WORD PTR(TRACK_LIST)(SI+APPL_NO_OFF),BX
                JZ      TRAK_NO
                JMP     NEXT_ENTRY
TRAK_NO:        CMP     BYTE PTR(TRACK_LIST)(SI+TRACK_NO_OFF),DL
                JZ      SID_NO
                JMP     NEXT_ENTRY
SID_NO:         CMP     BYTE PTR(TRACK_LIST)(SI+SIDE_NO_OFF),DH
```

```
                JZ              FOUND_TRACK
                JMP             NEXT_ENTRY
FOUND_TRACK:    MOV             AX,WORD PTR(TRACK_LIST)(SI+DATA_POINTER_OFF)
                MOV             (TRACK_SEG),AX
                MOV             AH,0            SET STATUS SUCCESSFUL
                RET
NEXT_ENTRY:     ADD             SI,RECORD_LENGTH
                LOOP            DRIVE
                MOV             AH,0FFH         SET STATUS UNSUCCESSFUL
```

APPENDIX P THE TRACK EMULATION SOFTWARE

This routine forms the core of the entire disk emulation process. As its name implies the routine controls the emulation of a track of data that would normally be read off a floppy disk. This routine also accepts data that would be written to the floppy disk. The track that has to be emulated is shown in Figure P1 and is described in detail in Appendix A.

The track emulation procedure is described below in terms of a high level language. Procedure names that are in capital letters relate to procedures that can be directly associated with characteristic features of the track of the disk as shown in Figure P1. Procedure names that are in small letters are procedures that are required due to implementation details. Bracketed procedures indicate procedures that have been split but conceptually should be one procedure. The assembler listing is at the end of this appendix.

It is assumed that the communications controller has been programmed previously See Appendix O.

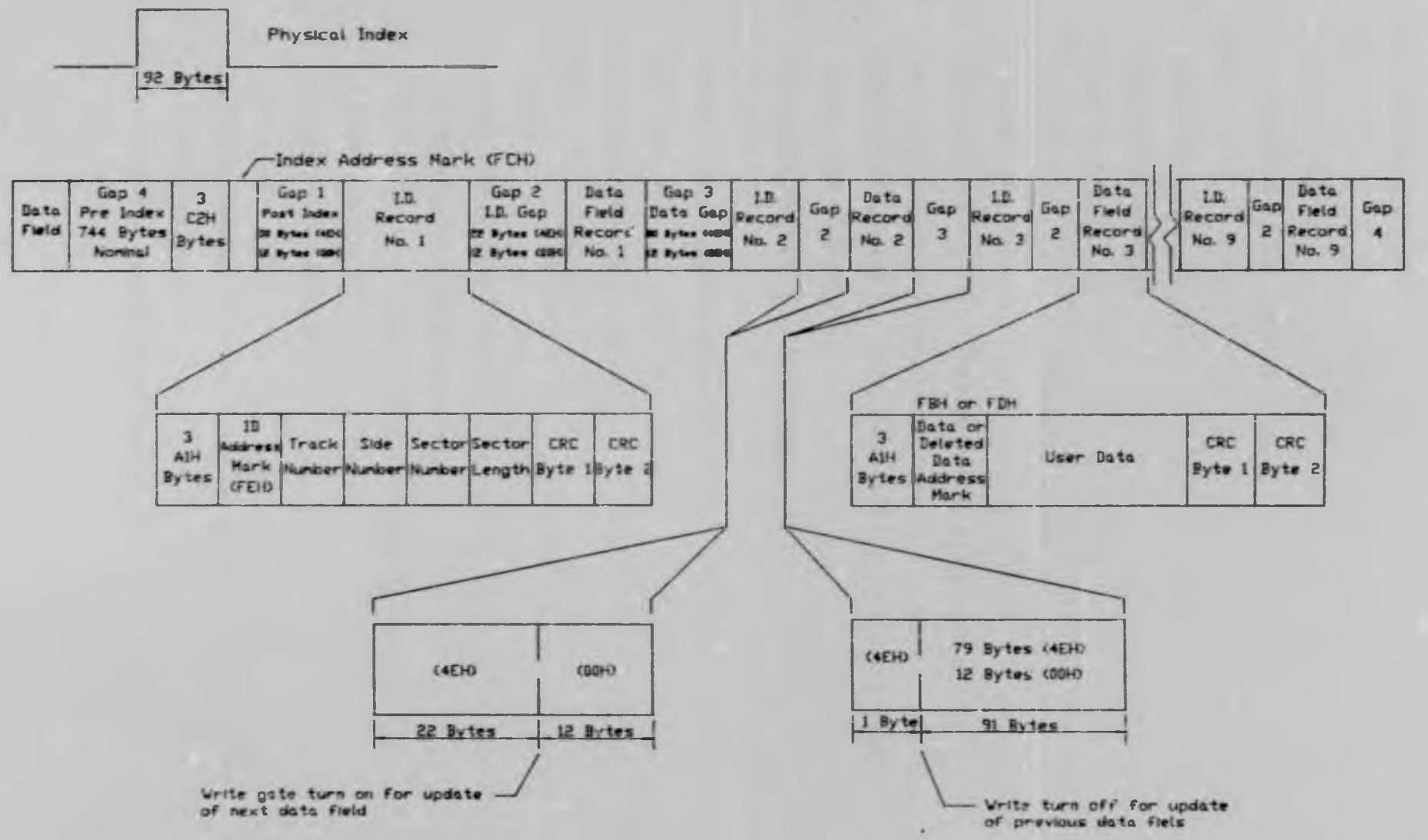

Figure P.1 Diagram Of The IBM System 34 Double Density Track Format

```
PROCEDURE Track_emulate;
  VAR
    n,i : integer;
    track_number, prev_track_no : byte;
  BEGIN
    set_data_source_pointer,
    INDEX_PULSE_ACTIVE;
    start_tx_clk;
    GAP (4EH,77);              {Remainder of gap 4 }
    set_synch_characters;
    GAP (00H,12);              {Synchronisation zeros of gap 4}
    enable_address_marker_generator;
    INDEX_HEADER_MARKER;       {Three C2H bytes with missing clocks}
    INDEX_PULSE_INACTIVE:
    INDEX_ADDRESS_MARK;        {FCH byte}
    GAP (4EH,1);
    disable_address_marker_generator;
    GAP (4EH,49);              {Gap 1}
    n := no_of_sectors_per_track;
    FOR i:= 1 TO n DO
      BEGIN
        GAP (00H,6);
        enable_address_marker_generator;
        GAP (00H,6);           {Synchronisation zeros of gap 1}
        reset_eom_latch;
        reset_tx_crc_generator;
        START_CRC (A1H);
        HEADER_MARKER;         {Three A1H bytes with missing clocks}
        enable_receiver;
        I_D_ADDRESS_MARKER; {FEH byte }
        SEND_TRACK_NO;
        disable_address_marker_generator;
```

```
        SEND_SIDE_NO;
        SEND_SECTOR_NO;      {=1}
        SEND_SECTOR_SIZE;
        SEND_CRC;
        GAP (4EH,22);        {Gap 2}
        GAP (00H,6);
        enable_address_marker_generator;
        GAP (00H,6);    {Synchronisation zeros for gap 2}
        reset_eom_latch;
        reset_tx_crc_generator;
        START_CRC (A1H);
        HEADER_MARKER;       {Three A1H bytes with missing clocks}
        DATA_ADDRESS_MARKER;{FBH byte}
        set_data_destination_pointer;
        get_data_segment_pointer;
        GAP (data[1],1);
        disable_address_marker_generator;
        SEND_SECTOR (511); {Emulate actual sector data}
        SEND_CRC;
        all_characters_received;
        GAP (4EH,10);
        empty_receiver_buffer;
        disable_receiver;
        GAP (4EH,40);        {Gap 3}
        disable_crc_generator;
        read (track_number);
        if track_no <> prev_track_no then goto ABORT
        read (head_number);
        if head_number <> prev_head_no then goto ABORT
      END;
    GAP (4EH,100);              {Gap 4}
:ABORT  BEGIN
```

```
            stop_tx_clk;
            return;
          END;
END;
```

Most of the above procedure names are self explanatory but three that should be explained here to complete the above description are GAP and START_CRC and SEND_SECTOR.

```
  PROCEDURE GAP (          byt : byte,
                  no_of_bytes : integer );
    VAR
      i : integer;
    BEGIN
      For i := 1 TO no_of_bytes DO
        BEGIN
          REPEAT
          UNTIL transmit_buffer_empty;
          transmit (byt)
        END;
    END;
```

The transmitter is polled until the transmitter buffer is empty. In the assembler implementation the byte to be transmitted is passed to this routine in the AL register and the no of bytes in the CX register.

```
  PROCEDURE START_CRC (byt : byte);
    BEGIN
      REPEAT
      UNTIL transmit_buffer_empty;
      enable_CRC_generator;
      transmit (byt)
    END;
```

The CRC generator, having been reset previously, is enabled just before the transmission of a specific character. As above the required character

```
            stop_tx_clk;
            return;
          END;
END;
```

Most of the above procedure names are self explanatory but three that should be explained here to complete the above description are GAP and START_CRC and SEND SECTOR.

```
  PROCEDURE GAP (          byt : byte,
                  no_of_bytes : integer );
    VAR
      i : integer;
    BEGIN
      For i := 1 TO no_of_bytes DO
        BEGIN
          REPEAT
          UNTIL transmit_buffer_empty;
          transmit (byt)
        END;
    END;
```

The transmitter is polled until the transmitter buffer is empty. In the assembler implementation the byte to be transmitted is passed to this routine in the AL register and the no of bytes in the CX register.

```
  PROCEDURE START_CRC (byt : byte);
    BEGIN
      REPEAT
      UNTIL transmit_buffer_empty;
      enable_CRC_generator;
      transmit (byt)
    END;
```

The CRC generator, having been reset previously, is enabled just before the transmission of a specific character. As above the required character

is passed to the procedure in the AL register. The transmit CRC enable bit should be in the desired state when the data character is loaded from the transmit data buffer into the transmit shift register. To ensure the proper state of this bit, the buffer state is monitored until it is empty i.e. the data would have been transferred to the shift register and only then is the CRC enabled and the data character loaded.

```
PROCEDURE SEND_SECTOR (no_of_bytes : word);
  VAR
    i,RxD_CHARS : integers;
    byt : byte;
  BECIN
    RxD_CHARS := 0;
    For i := 1 TO no_of_bytes DO
      BEGIN
        IF char_ready AND (RxD_CHARS < 512)
          THEN BEGIN
                 receive (byt);
                 RxD_CHARS := RxD_CHARS + 1;
               END;
        IF transmit_buffer_empty THEN send (byt)
      END;
```

This procedure is responsible for transmitting the sector information during the emulation process while at the same time accepting data that is being written to the sector.

Most of the above mentioned procedures can be followed easily in the assembler listing at the end of this appendix. Only aspects of particular interest and importance will be discussed. The constants used will be self explanatory in most cases but all constants used are defined in Appendix O. The peculiarities of programming the SCC will also be described there.

An important aspect to remember throughout this routine is that all DATA written to or read from the SCC has its bit order reversed i.e. the reads and writes are made to the Z8530BDREV register. It must also be remembered that channel B of the SCC is used for the emulator but the DTR line of channel A is also used. The bit functions of the registers most frequently manipulated in this routine are shown in Figure P2.

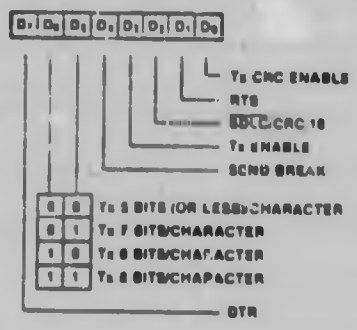

Figure P2 Bit Functions Of Write Register 5 Of The Z8530

set_data_source_pointer - As is explained in Appendix I on the track cache implementation the offset within the segment at which each data block of the cache starts is zero. The SI register which is the source index register must therefore be set to zero.

INDEX_PULSE_ACTIVE and **INACTIVE** - Setting and resetting of the DTR bit in register 5 of channel A sets the index pulse active and inactive respectively.

start_tx_clk - Setting RTS bit in register 5 of channel B enables the transmitter clock source.

set_synch_characters - The synchronization characters of the SCC are initially set to 4EH so that when emulation begins these characters will be transmitted. These characters are also used by the receiver of the SCC. The synchronisation characters are chosen to be the last A1H byte and the data marker of the sector i.e. FBH. In this way the first data character that will be assembled in the receiver is the first data byte of the sector being written to the disk emulator. These bytes have to be reversed before they are written to the SCC since they are not reversed by the hardware like the other data bits hence the DFH instead of FBH etc.

enable_address_marker_generator and **disable** ... - Setting and resetting the DTR bit in register 5 of channel B enables and disables the address marker generator.

reset_eom_latch - For the CRC to be appended to a block of data this latch has to be reset after the first data byte of the block has been loaded. When this latch is set again when no more data is supplied at the end of the message the CRC is automatically appended. This is done by issuing the reset EOM command to register 0 of channel B.

reset_tx_crc_generator - The CRC generator has to be preset before the calculation of the CRC on the forthcoming data stream can be performed. This is done by issuing the reset Tx CRC command to register 0 of channel B.

SEND_CRC - The SCC is forced to send the CRC calculated on the data by causing the transmitter to under-run i.e. stop providing the transmitter above. The EOM (End Of Message) latch must have been reset at some stage between the first and last character being loaded into the transmitter. The way that this is done here is by forcing the program into a loop after the last character of a block is sent. This loop is terminated by the EOM bit being set which indicates that the transmission of the CRC is in progress.

set_destination_pointer - The source pointer is constantly updated throughout the emulation of a track of data. The destination pointer is only updated during a disk write operation and since not all the sectors need be written to. The destination pointer is therefore updated at the start of each sector of data in anticipation of a disk write.

get_data_segment_pointer - As explained the track cache index stores the segment at which the data starts. The data segment register is loaded with this value.

all_characters_received - Characters are loaded from the SCC until the full sector being written to the emulator has been read in.

When the assembler listing is examined the gap sizes implemented in the program are actually smaller than those specified in the high level description. As was mentioned previously the gap sizes were reduced as much as possible to increase the efficiency of the emulation process. The only gap size that could not be reduced is that of gap 2 between the sector I.D. and the actual sector. When this gap was reduced data being written to the disk was lost at the beginning of the sector. This gap therefore is best left the correct length. The Floppy Disk Controller did not appear to be affected by the reductions in the other gap sizes.

```
TRACK_EM    PROC    NEAR
            MOV     SI,0            SET OFFSET TO ZERO
            MOV     DX,Z8530BDREV   PORT POINTER TO REVERSED DATA PORT
            MOV     AL,4EH          PUT FIRST CHAR IN TRANSMIT BUFFER
            OUT     DX,AL
            MOV     DX,Z8530AC      N.B. CHANNEL A
            MOV     AL, REG5
            OUT     DX,AL           SELECT REGISTER 5 OF CHANNEL A
            MOV     AL,A_TX_EN
            OR      AL,DTR
            OUT     DX,AL           SET INDEX PULSE ACTIVE
            MOV     DX,Z8530BC
            MOV     AL,REG5
            OUT     DX,AL           SELECT REGISTER 5 OF CHANNEL B
            MOV     AL,B_TX_EN
            OUT     DX,AL           START TxCLK
            MOV     AL,4EH
            MOV     CX,10           REDUCED GAP LENGTH FOR GAP 4
            CALL    GAP             END GAP 4 (4EH)
            MOV     AL,REG6         SELECT SYNCH CHAR REGISTER
            OUT     DX,AL
            MOV     AL,SYNCHM
            OUT     DX,AL           CHANGE TO A1H SYNCH CHARACTER
            MOV     AL,REG7
            OUT     DX,AL
            MOV     AL,0DFH         CHANGE SYNCH CHAR. TO DATA MARKER
            OUT     DX,AL
            MOV     AL,00H          12 SYNCHRONIZATION ZERO'S FOR
            MOV     CX,12           GAP 4
            CALL    GAP
            MOV     AL,REG5         SELECT REGISTER 5 OF CHANNEL B
            OUT     DX,AL
            MOV     AL,B_TX_EN
            OR      AL,DTR          DTR CONTROLS MARKER GENERATOR
            OUT     DX,AL           ACTIVATE ADDRESS MARK GENERATOR
            MOV     AL,0C2H
            MOV     CX,3
            CALL    GAP             INDEX HEADER MARKER
            MOV     DX,Z8530AC      N.B. CHANNEL A
            MOV     AL,REG5
            OUT     DX,AL           SELECT REGISTER 5 OF CHANNEL A
            MOV     AL,A_TX_EN
            OUT     DX,AL           DE-ACTIVATE INDEX PULSE
            MOV     DX,Z8530BC
            MOV     AL,0FCH
            MOV     CX,1
            CALL    GAP             INDEX ADDRESS MARK
            MOV     AL,4EH
            MOV     CX,1            START OF GAP 1 (4EH)
            CALL    GAP
            MOV     AL,REG5
            OUT     DX,AL           SELECT REGISTER 5 OF CHANNEL B
            MOV     AL,B_TX_EN
            OUT     DX,AL           DISABLE ADDRESS MARK GENERATOR
            MOV     AL,4EH
            MOV     CX,10
            CALL    GAP             REST OF GAP 1 (4EH)
```

```
                MOV     AX,0000H        SET DATA SEGMENT TO VARIABLES
                MOV     DS,AX
                MOV     CX,WORD PTR(SECTS_PER_TRACK)
SECTOR:         PUSH    CX
                MOV     AL,0            START OF SYNCHRONIZATION ZEROS
                MOV     CX,6
                CALL    GAP             FOR GAP 1 (00H)
                MOV     AL,REG5
                OUT     DX,AL           SELECT REGISTER 5 OF CHANNEL B
                MOV     AL,B_TX_EN
                OR      AL,DTR          ENABLE ADDRESS MARK GENERATOR
                OUT     DX,AL
                MOV     AL,0            REST OF SYNCHRONIZATION ZEROS
                MOV     CX,6
                CALL    GAP             FOR GAP 1 (00H)
                MOV     AL,RESET_EOM_LATCH RESET THE EOM LATCH
                OUT     DX,AL
                MOV     AL,RESET_TX_CRC
                OUT     DX,AL           RESET CRC GENERATOR
                MOV     AL,0A1H
                CALL    START_CRC       ENABLE CRC GEN AND SEND 1 CHAR
                MOV     AL,0A1H         OF I.D. ADDRESS HEADER MARKER
                MOV     CX,2
                CALL    GAP             REST OF I.D. ADDRESS HEADER MARKER
                MOV     AL,REG3
                OUT     DX,AL           SELECT REGISTER 3 OF CHANNEL B
                MOV     AL,B_RX_EN
                OUT     DX,AL           ENABLE RECEIVER
                MOV     AL,0FEH
                MOV     CX,1
                CALL    GAP             I.D. ADDRESS MARKER
                MOV     AL,[TRACK_NO]   LOAD TRACK NUMBER
                MOV     CX,1
                CALL    GAP             SEND TRACK NUMBER
                MOV     AL,REG5
                OUT     DX,AL           SELECT REGISTER 5 OF CHANNEL B
                MOV     AL,B_TX_EN
                OR      AL,TX_CRC_EN    KEEP CRC GENERATOR ACTIVE
                OUT     DX,AL           DISABLE ADDRESS MARK GENERATOR
                MOV     AL,[SIDE_NO]    LOAD THE SIDE NUMBER
                MOV     CX,1
                CALL    GAP             SEND SIDE NUMBER
                MOV     AL,[SECTOR_NO]  LOAD SECTOR NUMBER
                MOV     CX,1
                CALL    GAP             SEND SECTOR NUMBER
                MOV     AL,2            512 BYTES PER SECTOR
                MOV     CX,1
                CALL    GAP             SEND SECTOR SIZE
EOM1:           IN      AL,DX           READ SCC STATUS
                TEST    AL,01000000B    TEST FOR EOM
                JZ      EOM1            (CRC BEING SENT)
                MOV     AL,4EH
                MOV     CX,22           GAP 2 (4EH) NOTE SIZE NOT REDUCED
                CALL    GAP
                MOV     AL,0            START OF SYNCHRONIZATION ZEROS
                MOV     CX,6
                CALL    GAP             FOR GAP 2 (00H)
```

```
                MOV     AL,REG5
                OUT     DX,AL           SELECT REGISTER 5 OF CHANNEL B
                MOV     AL,B_TX_EN
                OR      AL,DTR          ENABLE ADDRESS MARK GENERATOR
                OUT     DX,AL           AND DISABLE CRC GENERATOR
                MOV     AL,0            REST OF SYNCHRONIZATION ZEROS
                MOV     CX,6
                CALL    GAP             FOR GAP 2 (00H)
                MOV     AL,RESET_EOM_LATCH  RESET EOM LATCH
                OUT     DX,AL
                MOV     AL,RESET_TX_CRC     RESET TX CRC GENERATOR
                OUT     DX,AL
                MOV     AL,0A1H
                CALL    START_CRC       ENABLE CRC GEN AND SEND 1 CHAR
                MOV     AL,0A1H         OF DATA HEADER MARKER
                MOV     CX,2
                CALL    GAP             REST OF DATA HEADER MARKER
                MOV     AL,0FBH         DATA ADDRESS MARKER
                MOV     CX,1
                CALL    GAP
                MOV     DI,SI           SET DATA DESTINATION POINTER
                INC     BYTE PTR[SECTOR_NO] UPDATE SECTOR NUMBER
                MOV     AX,[TRACK_SEG]  DATA SEGMENT TO TRACK DATA
                MOV     DS,AX
                MOV     ES,AX
                LODSB                   LOAD DATA BYTE
                MOV     CX,1
                CALL    GAP             SEND FIRST DATA BYTE
                MOV     AL,REG5
                OUT     DX,AL           SELECT REGISTER 5 OF CHANNEL B
                MOV     AL,B_TX_EN
                OR      AL,TX_CRC_EN
                OUT     DX,AL           DISABLE ADDRESS MARK GENERATOR
                MOV     CX,511
                CALL    SEND_SECT       SEND SECTOR
EOM2:           IN      AL,DX           READ SGC STATUS
                TEST    AL,CHAR_READY
                JZ      EOM3
                CMP     BX,512          ALL CHARS RECEIVED
                JGE     EOM3
                MOV     DX,Z8530BDREV
                INSB
                INC     BX
                MOV     DX,Z8530BC
EOM3:           IN      AL,DX
                TEST    AL,E_O_M
                JZ      EOM2            (SEND CRC)
                MOV     AL,4EH          START OF GAP 3 (4EH)
                MOV     CX,10
                CALL    GAP
PX_IP:          IN      AL,DX           EMPTY OUT RECEIVE BUFFER
                TEST    AL,00000001B
                JZ      CON1
                MOV     DX,Z8530BD
                IN      AL,DX
                MOV     DX,Z8530BC
```

```
                JMP     RX_LP
CONT            MOV     AL,REG3         SELECT REGISTER 3 OF CHANNEL B
                OUT     DX,AL
                MOV     AL,0            DISABLE RECEIVER
                OUT     DX,AL
                MOV     AL,4EH          REST OF GAP 3 (4EH)
                MOV     CX,40
                CALL    GAP
                MOV     AL,REG5
                OUT     DX,AL           SELECT REGISTER 5 OF CHANNEL B
                MOV     AL,B_TX_EN
                OUT     DX,AL           DISABLE CRC GEN
                POP     CX
                MOV     AX,0000H
                MOV     DS,AX           SET TO TO VARIABLES SEGMENT
                PUSH    DX              SAVE PORT POINTER
                MOV     DX,INPORT2      SET PORT POINTER TO TRACK COUNTER PORT
                IN      AL,DX           READ TRACK COUNTER
                POP     DX              RESTORE PORT POINTER
                CMP     AL,BYTE PTR(TRACK_NO) COMPARE WITH PREVIOUS VALUE
                JNZ     ABORT           GOTO ABORT IF NOT EQUAL
                MOV     AH,0            SET TO SIDE ZERO
                IN      AL,DX           READ SCC STATUS
                TEST    AL,00100000B    CHECK CTS ( SIDE )
                JZ      SIDO
                MOV     AH,1            SET TO SIDE 1
SIDO:           CMP     AH,BYTE PTR(SIDE_NO) COMPARE WITH PREVIOUS VALUE
                JNZ     ABORT           GOTO ABORT IF NOT EQUAL
                LOOP    SECT
ABORT           MOV     AL,REG5
                OUT     DX,AL           SELECT REGISTER 5 OF CHANNEL B
                MOV     AL,B_TX_EN
                AND     AL,RTSOFF
                OUT     DX,AL           DISABLE TXCLK
                RET
SECT:           JMP     SECTOR

GAP             PROC    NEAR            CHAR IN AL, COUNT IN CX
                MOV     BL,AL           STORE CHARACTER
GAP_LP:         IN      AL,DX           READ SCC STATUS
                TEST    AL,00000100B    TRANSMIT BUFFER EMPTY?
                JZ      GAP_LP          JUMP IF NOT
                MOV     DX,Z8530BDREV   POINT TO REVERSED DATA PORT
                MOV     AL,BL           GET CHARACTER BACK
                OUT     DX,AL           SEND CHARACTER
                MOV     DX,Z8530BC      RESTORE PORT POINTER
                LOOP    GAP_LP
                RET

START_CRC       PROC    NEAR
                MOV     BL,AL           STORE CHARACTER
STCRCLP:        IN      AL,DX           READ SCC STATUS
                TEST    AL,00000100B    TRANSMIT BUFFER EMPTY?
                JZ      STCRCLP
                MOV     AL,REG5
                OUT     DX,AL           SELECT REGISTER 5 OF CHANNEL B
                MOV     AL,B_TX_EN
```

```
                OR      AL,DTR          KEEP DTR ACTIVE
                OR      AL,TX_CRC_EN
                OUT     DX,AL           ENABLE CRC GENERATOR
                MOV     DX,Z8530BDREV   POINT TO REVERSED DATA PORT
                MOV     AL,BL           GET CHARACTER BACK
                OUT     DX,AL           SEND CHARACTER
                MOV     DX,Z8530BC      RESTORE PORT POINTER
                RET

SEND_SECT       PROC    NEAR
                MOV     BX,0            SET CHAR READ COUNTER TO 0
RX_CHAR         IN      AL,DX           READ SCC STATUS
                TEST    AL,00000001B    CHARACTER READY ?
                JZ      SEND_CHAR       JUMP IF NOT READY
                CMP     BX,512          ALL CHARS RECEIVED ?
                JGE     SEND_CHAR       JUMP IF ALL RECEIVED
                MOV     DX,Z8530BDREV   POINT TO REVERSED DATA PORT
                INSB                    READ CHARACTER INTO AL
                INC     BX              INCREMENT RECEIVED CHARACTER COUNTER
                MOV     DX,Z8530BC      POINT TO CHANNEL B CONTROL REGISTER
SEND_CHAR       IN      AL,DX           READ SCC STATUS
                TEST    AL,00000100B    TRANSMIT BUFFER EMPTY
                JZ      RX_CHAR         JUMP IF BUFFER NOT EMPTY
                MOV     DX,Z8530BDREV   POINT TO REVERSED DATA PORT
                OUTSB                   SEND BYTE
                MOV     DX,Z8530BC      POINT TO CHANNEL B CONTROL REGISTER
                LOOP    RX_CHAR
```

APPENDIX Q TESTING THE FLOPPY DISK DRIVE EMULATOR

Testing a unit such as the floppy disk drive emulator requires a modular testing approach so that the number of variables in each test is minimised.

The unit can be divided into three modules for testing :- the MFM decoder, the microprocessor control unit and the MFM encoder. A brief explanation of the testing of each of these units will be given.

Olivetti M24 Personal Computers provide the facility for the user to insert a Zilog 28530 Synchronous Communications Controller (SCC) on the motherboard. Only one channel of this dual channel device is hardwired to the RS 232 serial port with the other free for use. Using two P.C.'s, one of which should be an Olivetti to provide the above mentioned feature, the MFM decoder can be tested.

The MFM decoder has two inputs viz. the Write Enable and Write Data inputs that require connection to the floppy disk drive interface and two outputs providing a synchronous clock and data output. The decoder inputs are connected directly to the write enable and write data lines on the floppy disk drive interface. The outputs are connected to the RxD (Receive data) and one of the clock inputs on the SCC. A short assembler program was written for the Olivetti P.C. which initialises the SCC and then enters a polling routine to read in characters and display them on the screen. To ensure that no characters are missed, the characters are written directly to the screen memory. The synchronisation characters used are 4EH characters. Note the synchronisation characters must be written with their bit order reversed. The chip initialisation is the same as described in Appendix O. Using these synchronisation characters the SCC should begin assembling characters, two characters after the write enable signal becomes active. A disk is then formatted in the normal way on the P.C. to which the inputs of the decoder have been connected The program on the

Olivetti P.C. should be started first so that the SCC is initialised and 'hunts' for synchronisation characters. When the format program is started the SCC will synchronise on the characters in gap 4 preceding the index address marker. See Figure P1. The characters being written to the disk being formatted are written to the screen of the Olivetti BUT their bit order is reversed i.e. instead of N's appearing (ASCII character corresponding to 4EH) we find r's (ASCII character corresponding to 72H) Beside testing the operation of the decoder, the format information written to the disk during formatting could be verified. The CRC characters were also of great use as will be described later.

The synchronisation characters were then changed to A1H and FBH respectively. These two characters are the characters immediately preceding the data written in a sector. (Again these two characters must be written with their bit order reversed). Using the same program as above on the Olivetti P.C. with the minor change in the synchronisation characters, PCTOOLS was run on the other P.C.. Again the Olivetti's program is started first and then individual sectors were written to the floppy disk drives. (Note in this test and the one described above a normal floppy disk is being written to. Which disk drive is used is of no importance since the Write Enable and Write Data signals connected to the decoder are common to all the floppy disk drives). This test was done to see if the choice of synchronisation characters would be suitable for the SCC receiver on the emulator. This choice of synchronisation characters requires no intervention from the CPU to separate the data. The data appearing on the Olivetti screen was compared with that being written using PCTOOLS. Using synchronisation characters of A1H and FEH the I D. records of each sector could be checked during the formatting process. This proved to be very useful in the CRC checks as is explained later.

These tests verified the operation of the MFM decoder hardware as well as verifying some aspects of the software for the emulator. By using this

Olivetti P.C. should be started first so that the SCC is initialised and 'hunts' for synchronisation characters. When the format program is started the SCC will synchronise on the characters in gap 4 preceding the index address marker. See Figure P1. The characters being written to the disk being formatted are written to the screen of the Olivetti BUT their bit order is reversed i.e. instead of N's appearing (ASCII character corresponding to 4EH) we find r's (ASCII character corresponding to 72H). Beside testing the operation of the decoder, the format information written to the disk during formatting could be verified. The CRC characters were also of great use as will be described later.

The synchronisation characters were then changed to A1H and FBH respectively. These two characters are the characters immediately preceding the data written in a sector. (Again these two characters must be written with their bit order reversed). Using the same program as above on the Olivetti P.C. with the minor change in the synchronisation characters, PCTOOLS was run on the other P.C.. Again the Olivetti's program is started first and then individual sectors were written to the floppy disk drives. (Note in this test and the one described above a normal floppy disk is being written to. Which disk drive is used is of no importance since the Write Enable and Write Data signals connected to the decoder are common to all the floppy disk drives). This test was done to see if the choice of synchronisation characters would be suitable for the SCC receiver on the emulator. This choice of synchronisation characters requires no intervention from the CPU to separate the data. The data appearing on the Olivetti screen was compared with that being written using PCTOOLS. Using synchronisation characters of A1H and FEH the I.D. records of each sector could be checked during the formatting process. This proved to be very useful in the CRC checks as is explained later.

These tests verified the operation of the MFM decoder hardware as well as verifying some aspects of the software for the emulator. By using this

test configuration the area where hardware problems were most likely was restricted to the decoder.

Testing of the microprocessor control unit was done by testing sub-units within the control unit. The first sub-unit tested were the diagnostic L.E.D.'s since they couldn't fulfil their purpose until their functioning had been verified. The memory test described in Appendix O could then be performed. The input port that is used for the track counter was tested by applying various inputs to this port which was then output on the L.E.D.'s. The Olivetti P.C. was used in the testing of the control unit as well. Each of the SCO's on the control unit were tested by sending messages from the control unit to the P.C.. The P.C. was using the same program as described above.

At this stage the MFM decoder could be combined with the control unit. The one SCC's receiver was thus connected to the MFM decoder in the same way as it had been connected to the SCC in the Olivetti previously. The second SCC was connected up as a transmitter to the Olivetti P.C.. The software required for this test was a combination of the software used up to this stage. The program written for the Olivetti for the first formatting test was implemente on the control unit along with the program to transmit data to the Olivetti P.C.. This software was combined in such a way that a block of data was read into the control unit which was then transmitted to the Olivetti. The connections to the inputs of the MFM decoder were the same as in the original tests. The tests that had been previously performed on the MFM decoder were repeated. In this case though the data appearing on the Olivetti screen is not bit reversed since the bit order is restored by the control unit hardware. The original results obtained with the MFM decoder and Olivetti alone were now verified with the control unit included.

This confirmed the operation of the MFM decoder with the control unit.

Testing of the MFM encoder required the use of a logic analyser as well as the Olivetti P.C.. The SCC on the Olivetti provided the inputs to the MFM encoder. The data inputs to the MFM encoder as well as its output were monitored on the logic analyser. The encoding of all the bit sequences that when encoded produce all the possible MFM coding combinations were tested. These combinations are described in Appendix F. Sequences of zeros followed by the characters in the Index and I.D. address markers were used to verify the operation of the address mark generator. This required some control to be included from the software level. Recall that the address mark generator is controlled by the DTR line of the SCC. The waveforms recorded with the logic analyser corresponded with those of data being read off a typical floppy disk as required.

Having verified the encoding of the data only the CRC generation had to be verified. This proved to be rather difficult and time consuming. The main reason for this being that the manufacturers data either doesn't specify which CRC polynomial is used or what starting conditions are used or exactly what data it is calculated on. Some of the data that is available is in fact incorrect. In an Intel application note entitled 'An Intelligent Data Base System using the 8272' [9] the following statement is made in their discussion on the sector I.D. field. "The first byte of the field is the I.D. address mark. The second, third and fourth bytes are the cylinder, head and sector addresses, respectively, and the fifth byte is the sector length code. The CRC character is derived by the controller from the data in the first five bytes". As it turns out this is not the case. The Western Digital corporation have the FD1791/2 Floppy Disk Formatter / Controller that can be programmed to operate as a controller for the IBM System 34 Double Density formatting[10]. This format it should be recalled is the format used on the P C.. The data sheet for the FD1791/2 states that the polynomial used is $x^{16} + x^{12} + x^5 + 1$. It also states that the CRC register is preset to ones before the data is shifted through it. This information was found to be correct. It also

states that the CRC includes all information starting with the address mark up to the CRC characters. In a figure in the data sheet the I.D. address mark is shown to be the FEH byte In the data listed to format disks for the IBM format the data byte written to produce each of the A1H bytes required (which have missing clock pulses) states that the A1H byte is written in MFM and the CRC is preset. Comparing this information then with that from Intel it would appear that the CRC calculation commenced with the I.D. address mark in the case of sector I.D.'s and the data address mark in the case of sectors of data.

Armed with this information the SCC in the Olivetti was initialised to use the above mentioned CRC polynomial and initial conditions. The data in some of the sector I.D.'s that were read during the testing of the MFM decoder were sent through the SCC and the CRC generated. (Note the SCC was in loop-back mode so that the resulting message and CRC could be examined on the screen). The CRC characters generated did not agree with those read using the MFM decoder. A number of these sector I.D.'s were tested and none produced the required results. Finding patterns in the results obtained to try and determine the reason for the discrepancy is virtually impossible.
Some of the CRC's generated were verified by hand calculation. The results of the hand calculations corresponded with those of the SCC.

The first attempt to rectify the problem was to reverse the bits of each of the data bytes before calculating the CRC. This unfortunately just generated a third set of values. Working on the assumption that the polynomial and the initial conditions were correct, the only reason for an incorrect CRC is that the data on which it was calculated was incorrect. This assumption was made since the CRC polynomial used in the 8271 Single Density floppy disk controller [11] was the same and likewise the 82062 Winchester Disk controller[12] used this polynomial. An application note entitled 'Hard Disk Controller Design using the Intel 8089'[13]

states that this polynomial is used there as well. The polynomial therefore seemed a popular choice for this type of application.

The data passed through the generator was varied by adding and leaving out bytes, reversing the data etc. The solution was eventually found to be that the 3 A1H bytes preceding the sector I.D. address marker had to be included in the CRC calculation. The data must also be presented to the generator most significant bit first. The 3 A1H bytes preceding the data address marker were included in the CRC calculation for the data sector. Fortunately the resulting CRC corresponded with that of the floppy disk controller.

The final sub-unit that required testing was the track counter. This was done by connecting the STEP and DIR lines to the floppy disk interface. The control unit was programmed to read the track counter input port and put the value read out on the diagnostic L.E.D.'s. When a disk is formatted using MS-DOS 2.11's format program the track numbers are displayed on the screen as formatting takes place. The values on the L.E.D.'s were then compared with those on the screen.

Software based on the format information available was written to emulate a track of data i.e. the TRACK_FM routine with full size gaps. See Appendix P. The MFM decoder, encoder and controller unit were then interfaced to the floppy disk drive cable via the interface unit. The floppy disk drive emulator was then connected in place of one of the floppy disk drive units. Access to the emulator from DOS returned a 'NON DOS DISK ERROR'. This error indicated favourable performance by the emulator. The floppy disk controller was thus able to find the sector that it was looking for. When the sector was read and DOS realised that it did not correspond with the required DOS format the error was given.

Track 0 of a floppy disk contains various pieces of information for the operating system. This includes the bootstrap, file allocation table and the disk directory. The sectors assigned to these pieces of information are the following:-

Sector 1 - Boot record

Sectors 2 and 3 - First copy of the file allocation table

Sectors 4 and 5 - Second copy of the file allocation table

Sectors 6 to 12 - Directory entries

The sectors that the operating system reads when a directory of a disk is requested were ascertained by intercepting a BIOS interrupt call. The INT 13H routine in the BIOS is used for accessing the floppy disk controller from the higher levels of software. A short piece of assembler patch code was written that redirected this BIOS interrupt routine to a short routine that prints the parameters passed to this routine on the screen before proceeding with the rest of the interrupt routine. In this way the sectors required by the floppy disk controller can be seen. From this information the sectors required to provide a directory of a disk for example were determined. All these sectors lie on the same track viz. track 0. The information in these sectors was read from a physical floppy disk that had just been formatted. This information is inserted in track 0 in procedure TRACK0_INIT shown in the assembler listing at the end of this appendix.

The TRACK0_INIT procedure calls procedures FIRST, SECOND and SIXTH to generate the data required. FIRST fills the first and third sectors and fifth sectors with zeros. SECOND fills the second and fourth sectors which contain the File Allocation Table. SIXTH generates the data for each of the directory sectors.

When a directory was now requested the 'Files not found' message was returned by DOS which had immense significance. This indicates that the floppy disk controller has been able to extract data from the information

being generated by the floppy disk drive emulator. To test the ability of the emulator to store data written to it various write operations that require the use of track 0 alone were performed. This includes making directories (MKDIR) and removing directories (RMDIR). These operations require that the file allocation tables as well as the directory sectors are updated. Tests using PCTOOLS were also performed where a sector is read in from the emulator and the first and/or last characters say of the sector were changed. The sector is then written to the emulator and then re-read to ensure that the entire sector was being written correctly.

These test alone proved that the majority of the hardware was functioning as required and the software used to control it also appeared satisfactory.

The final test that was performed was the following :- The track cache was implemented in such a way that its contents were fixed i.e. it contained the first 21 tracks (i.e. 42 sides) of a floppy disk. Track 0 was again initialised in a similar way to that described above. It was now possible to emulate a floppy disk with approximately 180K of storage capacity. Now it is possible to copy large files onto the emulator and read them off again.

At this stage various experiments were performed in which the gap sizes were reduced. Again PCTOOLS was used to modify the beginning and end characters of the individual sectors. When the size of gap 2 is changed characters are lost in the sector being written. This gap was therefore left unchanged. The other gap sizes were reduced with no adverse effect.

A test was performed to observe the effects of simulated network operation on the disk drive emulation process. It should be noted that in the original emulator design had only one SCC. These devices have two channels

and it was originally designed for one channel to be used by the emulator while the other was for the network.

the network channel was initialised to accep an external transmit clock source and to transmit data in synchronous data format. The data that was to be transmitted was accessed from a single memory location using DMA. The external clock source was provided from a variable frequency oscillator. Files were read and written to the emulator as described above while at the same time the transmit clock frequency was increased. The results of this test were hardly encouraging. The required transmit clock frequency is between 1 and 1.5MHz but the emulation process was failing at frequencies as low as 20kHz!. Occasionally the emulation process was failing at lower frequencies. Closer examination of the problem with a logic analyser led to these conclusions :- The emulator software was based on polling while the network data was being supplied using DMA. DMA cycles can occur at anytime when the bus has not been locked by the central processing unit. It was possible therefore for a read or write to be made by the polling software on the SCC which would be followed or preceded immediately by a DMA access on the same device. The SCC has a certain access recovery time i.e. a minimum period is required between the accesses to the SCC. In the situation described where two accesses were made on the SCC one after another this access recovery time was not met. In a number of cases this corresponded with the failure of the emulation process. For this reason a second SCC was added for exclusive use by the network. When the tests were performed now the network transmit clock frequency could be increased to within the required range without any adverse effects on the emulation process.

The floppy disk drive emulator thus performed as required with file access times slightly shorter or the same as that from a physical floppy disk.

LIST OF REFERENCES

1. Haugdahl, J. Scott 'Local-area networks for the IBM PC' *BYTE* Vol. 9 No. 13 Dec. 1984 pp. 147 - 174

2. Abraham, R and Munro,R 'Microfloppies battle for pre-eminence' *COMPUTER DESIGN* Vol. 22 No. 1 Jan. 1983 pp.119 - 126

3. INTEL '8272A Single/double density floppy disk controller' *MICROSYSTEMS COMPONENTS HANDBOOK* Volume 2 1984 Order No.230843 pp. 6-553 - 6-571

4. INTEL 'iAPX 86/88, 186/188 User's Manual Hardware Reference' 1985 Order No. 210912-001 pp. 2-1 - 2-82

5. Chaney,R and Johnson,b 'Maximising hard-disk performance' *BYTE* Vol. 9 No. 5 May 1984 pp. 307

6. McKeon, Brian 'An algorithm for disk caching with limited memory' *BYTE* Vol. 10 No. 9 Sept. 1985 pp. 129 - 138

7. 'IBM PC Technical Reference Manual' First Edition (Revised March 1983) Part No. 6936844

8. 'I.B.M. Disk Operating System ' First Edition (Revised May 1983) Version 2.00 Part No. 6183485

9. INTEL '82530 SCC Technical Manual' July 1984 Order No. 230925-001

10. ZILOG 'Z8530 Data Sheet' 1983/84 Data Book Order No.00-2034-03 pp. 409 - 429

11. INTEL AP-116 'An intelligent data base system using the 8272' *MICRO-SYSTEM COMPONENTS HANDBOOK* Volume 2 1984 Order No.230843 pp.6-421 - 6-454

12. WESTERN DIGITAL CORPORATION 'FD1791/2 Floppy Disk Formatter/Controller' Document No. #A0103

13. INTEL '8271/8271-6 Programmable floppy disk controller' *MICROSYSTEMS CONTROLLER HANDBOOK* Volume 2 1984 Order No.230843 pp. 6-541

14. INTEL '82062 Winchester disk controller' *MICROSYSTEMS CONTROLLER HANDBOOK* Volume 2 1984 Order No.230843 pp. 6-574

15. INTEL AP-122 'Hard disk controller design using the 8089' *MICROSYS-TEMS COMPONENTS HANDBOOK* Volume 2 1984 Order No.230843 pp. 3-89

BIBLIOGRAPHY

- Sidhu, G.S. and Andrews, R.F. 'Applebus PROTOCOL ARCHITECTURE' *Apple Computer Inc.* May 1 1984

- Worden, J 'Design Considerations For Dual-Density Diskette Controllers' *Computer Design* Vol. 17 No. 6 June 1978

- Bass, C. 'Local Area Networks - A Merger Of Computer And Communications Technologies' *Microprocessors and Microsystems* Vol.5 No.5 June 1981

- Hurwicz, M. 'MS-DOS 3.1 Makes It Easy To Use IBM PCs On A Network' *Data Communications* Vol. 14 No. 12 Nov. 1985

- Mier, E. 'The Evolution Of A Standard Ethernet' *BYTE* Vol. 9 No. 13 Dec. 1984

- Sehr, R 'Two Low-Speed Nets Race To Link Computers' *ElectronicsWeek* Vol. 57 No. 36 Dec. 17 1984

- Loyer, B.A. 'LANs: The Coming Revolution In Factory Control' *Machine Design* Vol. 56 No. 27 Nov. 22 1984

- Hoeppner, J.F. and Wall, L.H. 'Encoding / Decoding Techniques Double Floppy Disk Capacity' *Computer Design* Vol. 19 No. 2 Feb. 980

- March, D. 'Floppy Disks' *Electronics & Wireless World* Vol. 91 No. 1587 Jan 1985

- Roskos, J.E. 'Writing Device Drivers For MS-DOS 2.0' *BYTE* Vol. 9 No. 2 Feb. 1984

- Linge, N. 'Emerging Local Area Network Technologies' *Microprocessors and Microsystems* Vol. 10 No. 1 Jan/Feb 1986

- Glinert-Cole, S. 'A Network For All Reasons' *PC TECH JOURNAL* Vol. 2 No. 12 Dec. 1984

- Schwaderer, W.D. 'CRC Calculations' *PC TECH JOURNAL* Vol. 3 No. 4 April 1985

Author De Souza E A
Name of thesis Edulan: a Local area network for an educational environment 1987

PUBLISHER:
University of the Witwatersrand, Johannesburg
©2013

LEGAL NOTICES:

Copyright Notice: All materials on the University of the Witwatersrand, Johannesburg Library website are protected by South African copyright law and may not be distributed, transmitted, displayed, or otherwise published in any format, without the prior written permission of the copyright owner.

Disclaimer and Terms of Use: Provided that you maintain all copyright and other notices contained therein, you may download material (one machine readable copy and one print copy per page) for your personal and/or educational non-commercial use only.

The University of the Witwatersrand, Johannesburg, is not responsible for any errors or omissions and excludes any and all liability for any errors in or omissions from the information on the Library website.