

https://dspace.org/

Quality management in brachytherapy: a risk-based approach

Boroto, Motshelo Godwil

2024
https://hdl.handle.net/10539/37405

Downloaded from a DSpace repository. https://dspace.org/

Quality Management in Brachytherapy: A risk-based approach

Boroto Motshelo Godwil



A dissertation submitted to the Faculty of Science,
University of the Witwatersrand, Johannesburg,
in fulfilment of the requirements for the degree of
Master of Science

School of Physics

Johannesburg, 2020

Declaration

I, Motshelo Godwil Boroto, declare that this Dissertation is my own, unaided work. It is being submitted for the Degree of Master of Science at the University of the Witwatersrand, Johannesburg. It has not been submitted before for any degree or examination at any other University.

_____

(Signature of candidate)

__11__day of_November_____20_20_____at_Parktown, JHB

Abstract

AIM: The aim of this dissertation was to use the prospective risk assessment methods: process mapping, failure modes and effects analysis (FMEA) and fault tree analysis (FTA) to identify areas of risk in the brachytherapy process and use the results to design a new quality assurance (QA) program.

MATERIALS AND METHODS: The study was conducted in three phases in which a multidisciplinary team of professionals participated through completion of questionnaires. Results of the analysis of these feedback were then used to re-design the brachytherapy quality program of the case study private hospital.

RESULTS: Over 20 potential failure modes (FMs) were identified along the brachytherapy process. 20% of these FMs were analyzed further based on their risk priority number (RPN). A collective of all these FMs were found to directly or indirectly contribute to the patient's dose misadministration. Applicator in wrong position ranked the highest. Movement of patients on a stretcher in between departments was identified as one of the main causes.

CONCLUSION: New protocols were recommended for dose prescription, imaging and treatment planning. Usage of the kV CBCT in the linac bunker was implemented for brachytherapy imaging and treatment planning. Checklists were developed as QA tools to intercept most of the identified FMs. Additional quality control (QC) tests were also suggested and some traditional tests deemed unnecessary by the prospective methods were excluded from the QA program. Application of risk-based methods helped in assigning resources to the most vulnerable parts of the brachytherapy process in the private hospital.

Acknowledgements and Dedication

I would like to thank my supervisor, Dr Iyabo Usman and co-supervisor Dr Thulani Nyathi for pushing me far beyond my comfort zone, and for their endless patience and professionalism. Without your constructive criticism, this work wouldn't be accomplished with the same thoroughness and vigor.

Without mentioning their names as per the university rules, I'd like to extend my gratitude to the group of professionals who agreed to participate in this research and for making an invaluable contribution. Some of you went beyond just completing the questionnaires, I'm truly grateful.

I would also like to make a special acknowledgement and dedication to my son Thabiso and my mother Melita Boroto for being a constant motivation and drive behind all the hard work and sleepless nights put in this work.

Contents

Declaration ii

Abstract iii

Acknowledgements and Dedication iv

List of Figures vii

List of Tables ix

Abbreviations x

Chapter 1 Introduction 1

1.1. Problem Statement 2

1.2. Research Objectives 2

1.3. Dissertation Outline 3

Chapter 2 Literature Review 4

2.1. Dose Specification 5

2.1.1. The Manchester System 5

2.1.2. The GEC-ESTRO GYN Working Group (I) and (II) 7

2.1.2.1. Definitions of target volumes 7

2.1.2.2. Dose-volume parameters 9

2.1.2.3. Recommendations for reporting 10

2.1.3. The ICRU 89 System 11

2.2. Review of Current QA Protocols in Brachytherapy 12

2.2.1. The AAPM's Task Group 40 12

2.2.2. Report of the AAPM's Task Group 56 15

2.2.3. Report of the AAPM's Task Group 59 16

2.2.4. Canadian Association of Provincial Cancer Agencies (CAPCA) 18

2.3. Prospective Risk-based Quality Management 19

2.3.1. Process Mapping 20

2.3.2. Failure Modes and Effects Analysis (FMEA) 21

2.3.2.1. Fault Tree analysis (FTA) 28

Chapter 3 Materials and Methodology 31

3.1. The Gynae HDR Brachytherapy Process Map Data Collection 32

3.2. The FMEA Data Collection 33

3.3. The FTA Data Collection 34

Chapter 4 Results and Discussion **35**
4.1. The Brachytherapy Process map 35
4.2. Failure Modes and Effects Analysis 39
4.2.1. FM #1: Applicator in wrong position 44
4.2.1.1. FTA: FM #1 45
4.2.2. FM #2: Incorrect source strength 49
4.2.2.1. FTA: FM #2 49
4.2.3. FM #3: Clinical Judgement Error 52
4.2.3.1. FTA: FM #3 53
4.2.4. FM #4: Incorrect Contouring 54
4.2.4.1. FTA: FM #4 54
4.2.5. FM #5: Incorrect Doses 56
4.2.5.1. FTA: FM #5 57
4.3. Design of new QA Program 58
Chapter 5 Recommendations and Conclusions **62**
5.1. Recommendations 62
5.2. Limitations 65
5.3. Strengths 66
5.4. Future work 66
5.5. Conclusion 67
References **68**
Appendix A: The Quality assurance program **73**
A1. Routine QA 73
A2. Newly implemented procedures and protocols 74
A3. Checklists and Inventories 76
Appendix B: Questionnaires **78**
B1. Process Map Questionnaire 78
B2. FMEA Questionnaire 79
B3. FTA Questionnaire 80
Appendix C: FMEA Results **81**
Appendix D: Ethics Clearance **85**

List of Figures

Figure 2.1: Definition of points A and B according to the Manchester system 6
Figure 2.2. Schematic diagrams of GTV at diagnosis (a) and GTV at time of brachytherapy (b) showing tumour shrinkage between the two 8
Figure 2.3. Schematic diagram demonstrating the GTV, high risk CTV and intermediate CTV for limited disease cervix cancer 9
Figure 2.4. Dose volume histograms of IR CTV, HR CTV and GTV for one fraction of HDR intracavitary brachytherapy 9
Figure 2.5. HDR Procedure flow 18
Figure 2.6. An example of a process map 21
Figure 2.7. Basic events structure of fault tree analysis 29
Figure 2.8: Fault tree analysis for a treatment planning process 30
Figure 3.1: The Saginova afterloading unit used in the department 31
Figure 3.2: Applicators used at the brachytherapy department in the selected private hospital. 32
Figure 4.1: Consensus brachytherapy process map 36
Figure 4.2. Distribution of RPN over FM ranking, demonstrating the cutoff value for RPN. 40
Figure 4.3. A distribution of RPN values against the potential failure modes. 41
Figure 4.4. A distribution of severity values against the potential FM ranking. 42
Figure 4.5. A distribution of RPN values over applicator-related failure modes. 44
Figure 4.6. The fault tree analysis for applicator in wrong position. 45
Figure 4.7. The fault tree analysis for applicator in wrong position, with interventional actions. 48
Figure 4.8. The fault tree analysis for incorrect source strength. 49
Figure 4.9. The fault tree analysis for incorrect source strength with interventional actions 50
Figure 4.10. The fault tree analysis for error in clinical judgement 53
Figure 4.11. The fault tree analysis for error in clinical judgement, with interventional actions. 53

Figure 4.12. The fault tree analysis for incorrect contouring. 55
Figure 4.13. The fault tree analysis for incorrect contouring, with interventional actions or gate keepers. 56
Figure 4.14. The fault tree analysis for incorrect doses. 57
Figure 4.15. The fault tree analysis for incorrect doses, with interventional actions. 58
Figure 4.16. New brachytherapy process map for the selected private hospital ... 59
Figure 4.17(a). New brachytherapy process map for the selected private hospital, with interventional actions 60
Figure 4.17(b). New brachytherapy process map for the selected private hospital, with interventional actions. 61

List of Tables

Table 2.1. Quality assurance of remote after loading brachytherapy units..... 14
Table 2.2. Tests, their frequencies and performance levels for brachytherapy after loaders 19
Table 2.3. Description of the occurrence (O) from published authors..... 22
Table 2.4: Description of the severity (S) from published authors 24
Table 2.5: FMEA results for a gynaecologic HDR brachytherapy including the number of quality assurance checks..... 26
Table 2.6: Description of the detectability (D) from published authors 27
Table 4.1: The highest 20% of the RPN values in the FMEA. The rest of the FMEA results can be viewed in appendix A..... 43

Abbreviations

2D	Two Dimensional
3D	Three Dimensional
AE	Adverse Event
AAPM	American Association of Physicists in Medicine
CBCT	Cone Beam Computed Tomography
CT	Computed Tomography
EBRT	External Beam Radiation Therapy
FM	Failure Mode
FMEA	Failure Modes and Effects Analysis
FTA	Fault Tree Analysis
GEC-ESTRO	Groupe Européen De Curiethérapie and European Society for Radiotherapy & Oncology
HDR	High Dose Rate
ICRU	International Commission for Radiation Units and Measurements
KERMA	Kinetic Energy Released to Matter
MBDCA	Model-based dose calculation algorithms
MD	Medical Doctor
MDT	Multidisciplinary Team
MP	Medical Physicist
QA	Quality Assurance
QAC	Quality Assurance Committee
QC	Quality Control
QM	Quality Management
QMS	Quality Management System
RCA	Root-Cause Analysis
RO	Radiation Oncologist
RPN	Risk Priority Number
RT	Radiation Therapist
SRS	Stereotactic Radiosurgery
TG	Task Group
TPS	Treatment Planning System

Chapter 1 Introduction

High dose rate (HDR) brachytherapy is the treatment of cancer using a small encapsulated high activity radionuclide source (typically Ir-192) with dose rates of more than 12 Gy/hour placed inside or near the intended area of treatment [1]. Due to high doses involved in the delivery of HDR brachytherapy, quality control (QC) is very critical for the safety of the patient, the staff and members of the public visiting the department. QA recommendations have been published by different associations on the tests to be done, tolerances acceptable and frequencies to carry out these tests. The American Association of Physicists in Medicine (AAPM) Task Group (TG) 40 [2] has outlined tests, tolerances and frequencies deemed necessary in the administration of HDR procedures. These recommendations range from source calibration to tests for brachytherapy applicators and many other physical and clinical tests.

Some reports have also sufficiently covered the physical and clinical tests, their tolerances and frequencies at which those tests should be performed [3, 4]. The European Society for Therapeutic Radiology and Oncology (ESTRO) has put together a booklet to comprehensively cover a broad range of physics aspects and quality control applications of brachytherapy [5]. The ESTRO recommendations have been widely accepted and used as standard practices by most brachytherapy departments across the globe.

1.1. Problem Statement

The private hospital where this research was conducted operates in several geographic sites across the metropolitan. Due to operational and logistical reasons, a need arose to have the brachytherapy unit moved from one site to another. In its new home the brachytherapy unit was housed in a linac bunker. This change of location presented an opportunity to revise the brachytherapy QA program which was previously designed around checking machine performance. Staff at the new site needed to be trained and refreshed on brachytherapy clinical service delivery, thus this was good timing to re-evaluate and potentially introduce a new QA program. In practice, safe and accurate delivery of the patient treatment should be assured through a quality management system that takes into consideration many other factors such as the availability of resources, experience of staff, length of treatment, number of fractions, stage of disease, etc. A QA program which gives equal weighting to all tests is not resource efficient, hence the need for a program which is driven by risk analysis and allocation of time and resources to those aspects of the process which are more vulnerable.

1.2. Research Objectives

This dissertation aims to review and develop a brachytherapy quality assurance program in a South African private hospital using prospective risk-based methodologies. The pilot QA program will be first applied to cervical cancer brachytherapy as this forms the most of the case load in the private hospital. The risk assessment methods include development of a process map, application of the FMEA and then FTA.

1.3. Dissertation Outline

- Chapter 1 gives a brief background introduction of brachytherapy and the role of quality assurance in this treatment modality. It gives the history of the machine-specific approach in brachytherapy and identifies the need for a more prospective, process-specific approach for a more robust QA program.
- Chapter 2 of this dissertation details a literature review on brachytherapy, with emphasis to gynaecological brachytherapy. It looks at the current quality assurance protocols, and the introduction of risk-based approach to QA.
- Chapter 3 looks at the methodology employed to conduct this research, the data collection and data analysis.
- Chapter 4 discusses the results, their analysis and discussion.
- Chapter 5 states conclusions, recommendations, and outlines limitations of this study and possible future work based on the findings.

Chapter 2 Literature Review

Brachytherapy can be delivered through external applicator moulds, interstitial implantation, intracavitary and intraluminal treatments [6]. Of interest to this research is intracavitary HDR brachytherapy, which is the use of a radioactive source to deliver treatment at a short distance to the tumour and is mostly used for cancers of the uterine cervix, uterine body, and vagina. Its rapid dose fall-off characteristic in the surrounding tissues is what makes it a modality of choice in treating the cancer of the cervix and many other diseases. Brachytherapy has, over the years, gone through developments from manual loading of sources to today's commercial remote afterloaders [6]. These afterloaders are controlled by special computer programs which allow for remote deployment of the radioactive source [6]. The dose distribution around the radioactive sources is mostly computed using the AAPM's TG 43 formalism [7].

HDR brachytherapy of the cervix involves the delivery of radiation treatment with the radioactive source placed into the area of interest through the transfer tubes and applicators assembly. The source is then moved into different dwell positions for a certain dwell time depending on the part of the applicator it has been loaded in. These dwell positions and times are generated by the algorithm based on TG 43 of the AAPM, which takes into consideration the prescribed dose, air kerma strength and other known variables and constants such as the reference distance, dose rate constant, etc. For inverse planning, the dwell positions could be pre-determined to achieve a set of clinical goals according to the desired coverage of the cervix. This results in a dose distribution which takes a certain shape based on the way the sources were loaded inside the applicator, typically a pear-shape for tandem-ring applications. This dose distribution can be optimized looking at constraints such as the dose to the rectum and bladder, and coverage of the desired volume [6].

2.1. Dose Specification

HDR brachytherapy has over the years made rapid improvements from using orthogonal radiographs to today's 3-dimensional (3D) image guidance for visualization and treatment planning [8]. Different dose specification systems were developed and applied over the evolution of gynaecological brachytherapy. The milligram-hour, the Manchester, the International Commission on Radiation Units & Measurements (ICRU) report 38 [9], and the GEC-ESTRO GYN I and II [10, 11] systems are well known and used for dose specification and reporting of cervical cancer brachytherapy. The milligram-hour system was used in the early days of brachytherapy, and lost usage due to its lack of adequacy in providing information on other parameters such as source arrangements, packing of applicators, etc. In the following sections the dose specification and reporting systems will be discussed in detail for the reader's familiarity.

2.1.1. The Manchester System

This system is characterized by doses to point A, point B, the bladder and rectal dose points [6]. The resulting treatment duration is determined by the dose rate at point A. In addition to obtaining dose at the four mentioned points, with the help of treatment planning software, the treatment evaluation is done looking at the isodose distribution in the coronal and sagittal planes. Point A is defined as 2 cm superior along the tandem and 2 cm lateral to the cervical canal, point B is 3 cm lateral to point A as illustrated in Figure 2.1 below.

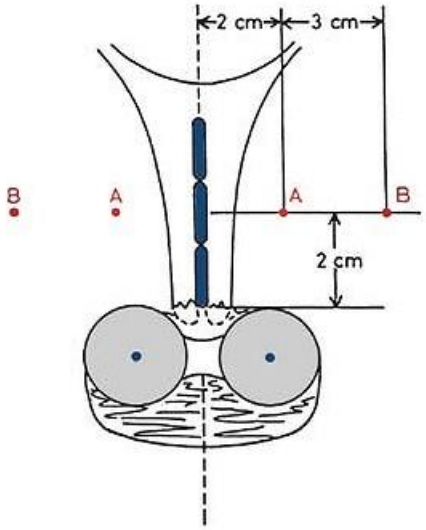

Figure 2.1: Definition of points A and B according to the Manchester system [6].

The irradiation of the uterine cervix is limited by the tolerance of the neighbouring critical structures like the rectum and bladder. Doses to both the rectum and the bladder are desired to be as lower to the prescribed dose as possible, less than 80% of dose to point A according to most publications [7].

Limiting the determination of treatment duration on point A has some shortcomings such as under dosage if it falls inside a large cervix and over dosage if it falls outside a smaller cervix. These disadvantages come as a result of it being defined mainly relative to the applicator than the actual patient anatomy. The rectum and bladder dictate how much the cervix can be irradiated in that if the OAR tolerance does not seem achievable during plan optimization, the radiation oncologist can reduce the prescribed dose to achieve it. This would usually be the case if the tumour is still significantly big and thus making the applicator insertion both challenging for the radiation oncologist and uncomfortable for the patient. Subsequent insertions would be expected to be a little easier with tumour shrinkage from the first fraction and external beam irradiation. This is in the quest to achieve the aim of striking a good

balance between sparing the critical structures and giving adequate dose to the tumour volume.

2.1.2. The GEC-ESTRO GYN Working Group (I) and (II)

The mandate of the GEC-ESTRO gynaecological (GYN) working group (I) was to describe basic concepts in 3D treatment planning of cervix cancer and work out terminology that would enable use of common language by various groups [10]. This involved the definition of target and tumour volumes which resulted from deliberations and workshops of the select expert panellists. The working group concluded that, instead of specifying prescription dose to a point, target volumes be used for a full 3D brachytherapy of the cervix cancer. Definitions of these volumes will be discussed here. The second working group of the GEC-ESTRO GYN focuses more on 3D dose-volume parameters for brachytherapy of cervix cancer [11]. For the purposes of this dissertation, the dose-volume parameters of target volumes and organs at risk and recommendations for reporting will be discussed.

2.1.2.1. Definitions of target volumes

Based on their clinical experience and the fact that there's expected shrinkage in initial tumour size over the course of treatment, the task group concluded that volumes should be defined at diagnosis (D) and time of brachytherapy (B). For fundamental definitions of the GTV, CTV, PTV, etc., the reader is referred to ICRU reports 50 and 62 [12,13]. This section outlines definitions detailed by GEC-ESTRO as follows:

Gross tumour volume (Diagnosis) (GTV_D) includes macroscopic tumour extension at diagnosis as detected by clinical examination and as visualised on MRI: high signal intensity mass(es) at fast spin echo sequences T2 in cervix/corpus, parametria, vagina, bladder and rectum, illustrated in Figure 2.2 below [10].

(a) (b)

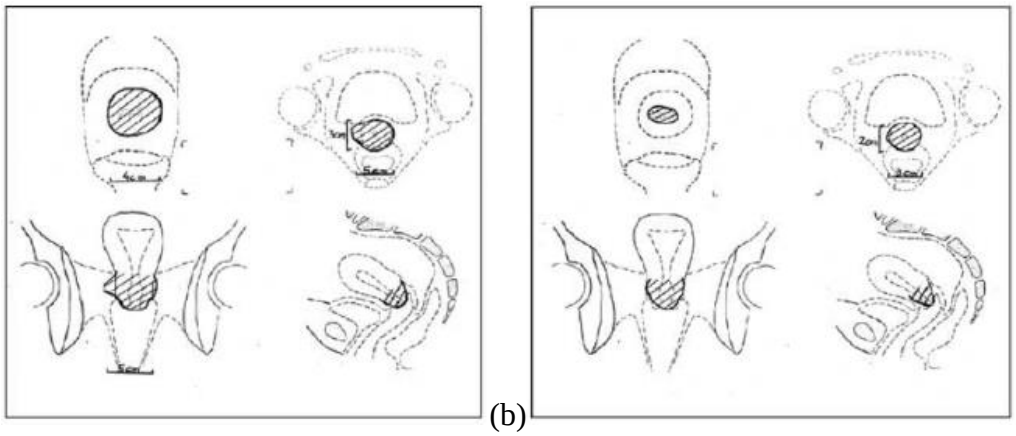

Figure 2.2. Schematic diagrams of GTV at diagnosis (a) and GTV at time of brachytherapy (b) showing tumour shrinkage between the two [10].

Gross tumour volume (BT) includes macroscopic tumour extension at a time of BT as detected by clinical examination and as visualised on MRI: High signal intensity mass(es) in cervix/corpus, parametria, vagina, bladder and rectum. In patients treated with upfront BT or with BT alone, GTV_B is identical with DTV_D [10].

High risk CTV for BT carrying a high tumour load, includes $GTV_{B1, B2}$…, always the whole cervix and the presumed extracervical tumour extension at time of BT. In limited disease GTV_B is identical with GTV_D [10].

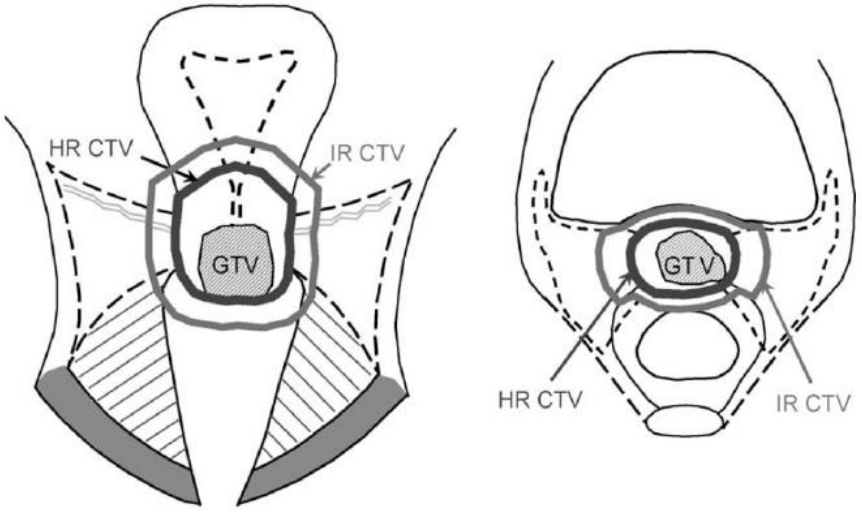

Figure 2.3. Schematic diagram demonstrating the GTV, high risk CTV and intermediate CTV for limited disease cervix cancer [10].

2.1.2.2. Dose-volume parameters

It is much easier to visualize and understand the concept of dose volume parameters for target volumes from cumulative dose volume histograms (DVH) analysis [11]. The DVH curves of both the GTV and CTV in intracavitary brachytherapy starts off with a plateau which indicates 100% of the volume of interest. This plateau falls down with increasing dose, indicating decreasing percentage of dose coverage. This is illustrated in Figure 2.4.

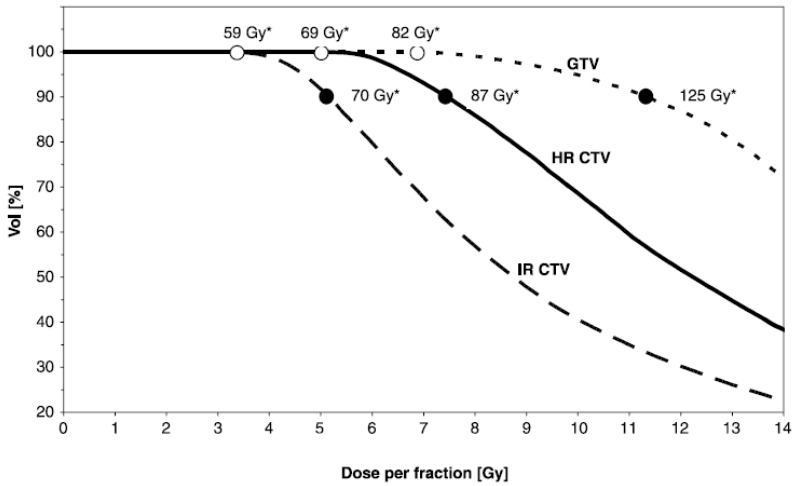

Figure 2.4. Dose volume histograms of IR CTV, HR CTV and GTV for one fraction of HDR intracavitary brachytherapy [11]

The white dots in Figure 2.4 represent dose at 100% (D_{100}) while black dots represent dose at 90% (D_{90}) for the respective curves. D_{100} and D_{90} are the minimum dose delivered to 100 and 90 percent of the volume of interest, respectively [11]. Dose value marked with asterisks represent the total equivalent dose of the external beam treatment plus the one fraction of brachytherapy.

2.1.2.3. Recommendations for reporting

The following is a summary of reporting recommendations according to the GEC-ESTRO GYN working group II [11]:

- Complete description of clinical situation including anatomy, pathology and imaging examination
- Dimensions and volume of GTV at diagnosis and at time of brachytherapy
- Dimensions and volumes of HR CTV and IR CTV, respectively
- Complete description of 3D sectional imaging technique and contouring procedure
- Complete description of brachytherapy technique radionuclide; source type, source strength, applicator type, type of afterloading; description of additional interstitial needles if any
- Treatment prescription and treatment planning
- Applicator reconstruction technique, standard loading pattern, dose specification method, optimization method, if applied
- Prescribed dose
- Total Reference Air Kerma (TRAK)
- Dose at point A (right, left, mean)
- D100, D90 for GTV and HR CTV and IR CTV, respectively
- Dose to bladder and rectum for ICRU reference points
- $^{*}D_{0.1cc}$, D_{1cc}, D_{2cc} for organs at risk (e.g. rectum, sigmoid, bladder)
- * D_{5cc}, D_{10cc} for organs at risk if contouring of organ walls is performed
- Complete description of time–dose pattern: physical and biologically weighted doses (α/β=10 Gy for GTV and CTV; α/β =3 Gy for OAR; $T_{1/2}$=1.5 h for GTV, CTV and OAR)

[*] $D_{0.1cc}$ refers to doses received by 0.1 cubic centimeters of OAR, and this also applies to the 1,2,5 and 10cc.

2.1.3. The ICRU 89 System

This report includes concepts discussed in both the ICRU 38 [9] and GEC-ESTRO GYN [10, 11]. The ICRU report 89 stands as one of the most recent comprehensive documents on reporting, recording and prescribing brachytherapy for cancer of the cervix [14]. Some more clinical concepts such as diagnosis, prognosis, tumour assessment, staging, combination with EBRT, etc. are discussed in this report and will not form part of the discussion of this dissertation.

This report introduces some new concepts on target volume definitions. These new volumes describe the gross tumour at different stages of treatment, hence the new term "adaptive brachytherapy". Below are some of the new target and tumour volume concepts introduced in the ICRU 89 report [14], definitions of which will not be provided here:

- GTV for the Primary Tumor (GTV-T)
- CTV for the Primary Tumor (CTV-T)
- Residual GTV-T (GTV-Tres)
- Adaptive CTV-T (CTV-Tadapt)
- High-Risk CTV-T (CTV-THR)
- Intermediate-Risk CTV-T (CTV-TIR)
- Low-Risk CTV-T (CTV-TLR)
- Planning Target Volume (PTV-T)

Most of these volumes follow similar definitions as per the GEC-ESTRO GYN recommendations, except for the introduction of the concept of planning target volume (PTV). Contrary to the negligible dose effect of PTV in EBRT, its addition to a brachytherapy target volume results in dose escalation to the entire CTV [14] and is not highly recommended in brachytherapy. This ICRU report incorporates a lot of guidance on implementation of modern brachytherapy techniques, in depth, and should be consulted for such purposes.

2.2. Review of Current QA Protocols in Brachytherapy

"Quality assurance is all those planned or systematic actions necessary to provide adequate confidence that the radiation oncology service will satisfy the given requirements for quality care" [2]. Due to the high doses per fraction involved in the delivery of HDR brachytherapy, it is critical to establish a comprehensive quality assurance program in any centre planning to offer the treatment to patients. According to the AAPM's TG40, a quality system is "the organizational structure, responsibilities, procedures, processes, and resources for implementing quality management" [2]. The current QA protocols give guidelines and recommendations on how to perform quality control tasks based on the procedures, tolerances and frequencies at which these should be performed [2, 3, 4, 5]. These documents have been adopted by majority of practices worldwide and forms the integral part of their quality management systems.

2.2.1. The AAPM's Task Group 40

The AAPM's TG 40 features a detailed section addressing all brachytherapy quality assurance tests, frequencies and tolerances of different radioactive sources, equipment and procedures [2]. This includes the roles and responsibilities in the whole HDR treatment planning and delivery process for all team members involved.

This report guides the user on how to handle brachytherapy sealed sources based on the type, size, filtration or encapsulation, chemical composition, etc. Knowledge of these parameters and characteristics helps the user make informed and practical decisions in terms of storage of the source prior installation for example, source calibration and dose distribution. Recommendations were also made on the need to verify the source strength before use and also ensure that its calibration is traceable to national or international standards. A table of brachytherapy source QA tests,

frequencies and tolerances has been provided [2]. The report also makes recommendations for quality assurance on brachytherapy source calibrators.

There are also recommendations on treatment planning and dosimetry in brachytherapy, where different implant systems are highlighted. Stereo-shift and orthogonal imaging were mentioned as conventional methods for localizing sources during the treatment planning of the brachytherapy process. Documentation of physical parameters is also recommended which should clearly state source strength, applicator, implant size, etc. Clear lines of communication are recommended to convey information between different steps and members of the team, with the physicist playing the leading role.

The report also outlines a list of quality assurance procedures to perform at different frequencies for remote after loaders. The introduction of these remote after loaders has solved the historic issue of personnel over-exposure during brachytherapy procedures. These are the minimum tests believed adequate to assure quality in the HDR brachytherapy service as illustrated in Table 2.1.

Table 2.1. Quality assurance of remote after loading brachytherapy units [2]

Frequency	Test	Tolerance
Daily	Room safety door interlocks, lights and alarms,	Functional
	Console functions, switches, batteries, printer	Functional
	Visual inspection of source guide	Free of kinks and firmly attached
	Verify accuracy of ribbon preparation	Autoradiograph
Weekly	Accuracy of source and dummy loading (dummies used for spacing and/or simulation/verification)	1 mm
	Source positioning	1 mm
At source change	Calibration	3%
	Timer function	1%
	Check accuracy of source guides and connectors	1 mm
	Mechanical integrity of applicators (by x ray if appropriate)	Functional
Annual	Dose calculation algorithm (at least one standard source configuration for each isotope)	3%, 1 mm
	Simulate emergency conditions	
	Verify source inventory	

2.2.2. Report of the AAPM's Task Group 56

The AAPM'S TG 56 expands more from TG 40 on the QA recommendations in brachytherapy and goes further to discuss different types of implant designs [3]. This report outlines tests already covered in the AAPM's TG 40, but with additional information and sections such as developing the brachytherapy QA program as illustrated in the steps below. To make sure the brachytherapy service is achieved with the highest safety and accuracy possible, it is recommended in this TG 56 that certain procedures be restricted to performance by certain members of the team. The report states five points to consider when designing a quality assurance program. Other sections of this report focus on the physical quantities such as the source strength, source strength calibration, source localization, etc. The bottom line in this document is the emphasis of a multidisciplinary approach to the establishment of a brachytherapy program, which is in line with the approach according to the methodology design of this dissertation. Below is a step by step procedure on designing a QA program for brachytherapy [3]:

STEP 1

Define the anticipated or actual flow of the procedure, including all major steps (e.g., implant design, applicator insertion, implant imaging, implant evaluation, etc.). At each step, identify the involved team members (physician, therapist, etc.)

STEP 2

Use carefully designed forms for capturing and documenting all critical information, including the implant drawing, applicators utilized, catheter numbering system, target localization data, and written prescription.

STEP 3

Identify vulnerable points in the treatment delivery process, where mistakes, misjudgements, or inaccurate transmission of data can jeopardize the outcome of the procedure. A redundant check should be designed, specifying who is to perform the check and what actions are to be taken if the test result deviates from

the expected outcome. Both severity and likelihood of the target error should be taken into account in deciding how to distribute available QA resources.

STEEP 4

Develop a written procedure, outlining the brachytherapy procedure chronology, team member functions, QA checks, and associated documentation. Each brachytherapy practice should develop written procedures and patient-specific documentation for each major type of procedure, as described above. In addition, each institution should develop a mechanism, formal or informal, for confirming compliance with the written QA program.

STEP 5

The brachytherapy QA program should be integrated into the overall departmental QA program (QA system) as defined by AAPM Task Group 40. This assignment gives the departmental QA committee (QAC) responsibility for monitoring the performance of the brachytherapy QA program so that any shortcomings can be identified and corrected

2.2.3. Report of the AAPM's Task Group 59

TG 59 of the AAPM [4] focuses on the safe delivery of the HDR brachytherapy service, covering topics such as staffing and training as well as treatment-specific QA. There is also an introduction of a pre-treatment checklist as an added QA tool to avoid omission of important steps in the procedure which may lead to errors and incidents. These checklists also ensure effective communication between different members in the team. A very important aspect of this report is the discussion of systematic and random errors, of which the random errors form the main part of the report in terms of prevention of certain misadventures. This report strongly recommends that it should be every institution's priority to minimize treatment delivery errors when designing both the HDR brachytherapy facilities and the procedure flows. It was also highlighted in this report that adding redundant checks

at key decision-making points can reduce misadventure incidence to acceptable levels.

The report lists four main principles to consider when designing the HDR brachytherapy program, details are found in the actual report:

- The use of written documentation
- Development of a written procedure
- Exploiting redundancy
- Exploiting quality improvement techniques

The report goes further to emphasize the importance of documenting all written procedures, checklists and forms which include the following:

- Written prescription and daily treatment record
- Treatment day remote after loader QA protocol.
- QA procedure flow checkoff list.
- Physicist's treatment plan/documentation review.
- Forms to document implant geometry, simulation data, and verification of computerized dwell-time calculations.
- Written protocols or policies of treatment for commonly treated disease sites, including treatment technique, dose specification criterion, and dose prescriptions

Staffing levels and training is also discussed, emphasizing a balanced distribution of roles and responsibilities based on the staff's level of training and appropriateness. It is also recommended that a medical physicist takes a leading role in the training and supervision of procedures, and coordinating intra-team communication during procedures. Figure 2.5 shows an HDR procedure flow. It is also emphasized that training of members of the brachytherapy team is critical; this is in addition to their respective board certifications. Minimum training requirements are also outlined in this report to guide institutions offering the HDR brachytherapy service. The report has a couple of QA duties tabulated for a variety of procedures for all team members in the treatment planning and delivery process.

To manage the complexity and number of procedures involved in the HDR brachytherapy process, the report recommends the use of a well-designed check-off list to assure that the service is delivered at the highest safety and quality possible.

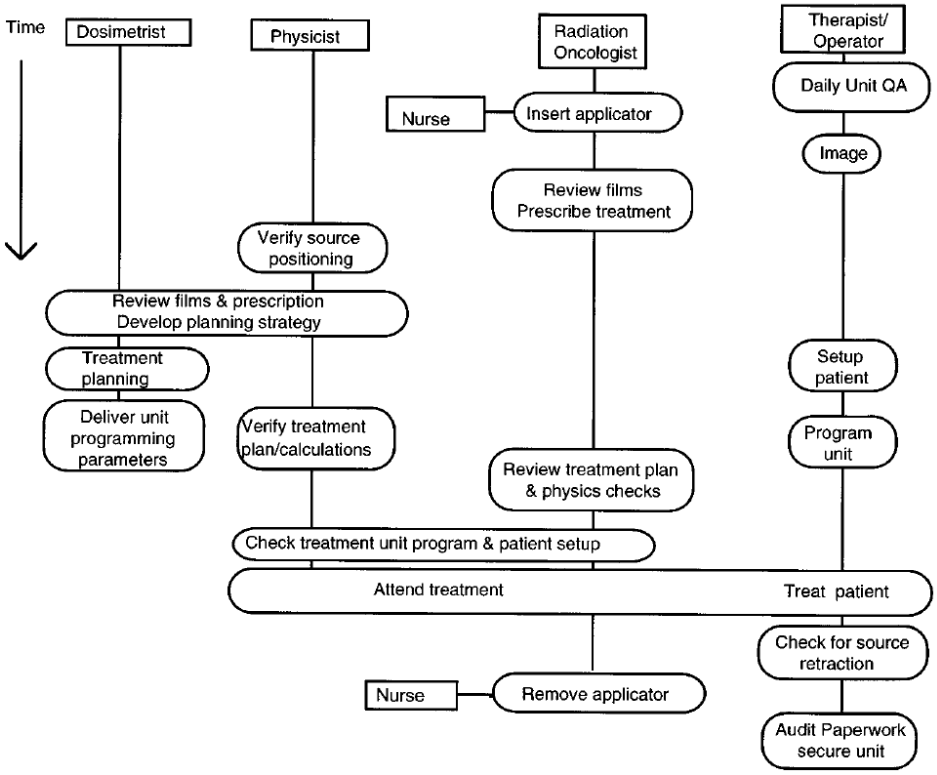

Figure 2.5. HDR Procedure flow according to AAPM report no. 59 [4]

2.2.4. Canadian Association of Provincial Cancer Agencies (CAPCA)

Most South African brachytherapy departments follow the Canadian Association of Provincial Cancer Agencies (CAPCA) [15] guidelines for quality control of their afterloaders and accessories. These guidelines stipulate the individual tests to be performed on each component, their frequencies, tolerance and action levels within which those are allowed to operate. Although procedures on how to perform the tests are not provided, the daily, quarterly and annual guidelines are stated. The standards used by CAPCA specify whether the equipment is functional,

reproducible or meets set accuracies based on tolerance and action levels. Table 2.2 below was extracted from the CAPCA document, and lists all tests and their frequencies.

Table 2.2. Tests, their frequencies and performance levels for brachytherapy after loaders [15].

Designator	Test	Performance	
		Tolerance	Action
Daily			
DHRA1	Door interlock/last person out	Functional	
DHRA2	Treatment interrupt	Functional	
DHRA3	Emergency off (console)	Functional	
DHRA4	Room radiation monitor	Functional	
DHRA5	Console displays (treatment status indicator, date, time, source strength)	Functional	
DHRA6	Printer operation, Paper supply	Functional	
DHRA7	Data transfer from Planning Computer	Functional	
DHRA8	Audio/Visual communication system	Functional	
DHRA9	Source positional accuracy	1	2
DHRA10	Dwell time accuracy	1%	2%
Quarterly (or at source replacement)			
QHRA1	Mechanical integrity of applicators, guide tubes, connectors	Functional	
QHRA2	Emergency off (in room)	Functional	
QHRA3	Power failure recovery	Functional	
QHRA4	Source strength calibration	3%	5%
QHRA5	Source positional accuracy	1	2
QHRA6	Dwell time accuracy	1%	2%
QHRA7	Timer linearity	1%	2%
QHRA8	Records	Complete	
Annually			
AHRA1	Transit dose reproducibility	1%	2%
AHRA2	X-ray marker positional accuracy	1	2
AHRA3	Review emergency response procedures	Complete	
AHRA4	Independent quality control review	Complete	

2.3. Prospective Risk-based Quality Management

The aim of a prospective approach to quality management is to identify risky process steps before a failure can occur [16]. Once these risky steps have been identified, the next step would be to design a new process, or modification of the current one to reduce the likelihood of occurrence of failure or increase the likelihood of detecting them before the outcome is compromised. There are some

prospective quality management tools used to serve this purpose, some of which are the process mapping or flow charts, failure modes and effects analysis (FMEA) followed by the fault tree analysis (FTA). A system-level top-down approach can be used, which consists of developing a flow chart of the major steps in the process, performing an FMEA on those steps, developing a detailed process flowchart for the identified failure modes and performing an FMEA on the detailed process steps. This will result in the identification of only those detailed process steps with the highest likelihood for failure or injury [16]. FTA is essentially performed on the highest-ranking failure modes identified using FMEA. This is a process-improvement exercise, prioritizing the highest risk areas and narrowing down as the resources allow.

2.3.1. Process Mapping

A process map is "any visual representation of the steps involved in a process". Process maps are considered easy to understand regardless of the process or industry in question. Process maps also form the basis of other quality and safety tools, including Failure Modes and Effects Analysis and Fault Tree Analysis [17]. A typical process map is made up of a trunk which takes the patient from the start of treatment, the main boughs representing major sub processes and the branches representing steps in the sub processes, see Figure 2.6. These can be further broken into twigs and leaves depending on the intended level of detail [18].

It is important to arrange steps in chronological order so the interrelationship between the steps is clear. This makes it easy to follow and also helps one to be able to limit or extend the level of detail as needed. Too much a detail can obscure the flow and relationship [18], while too little detail can hide important steps.

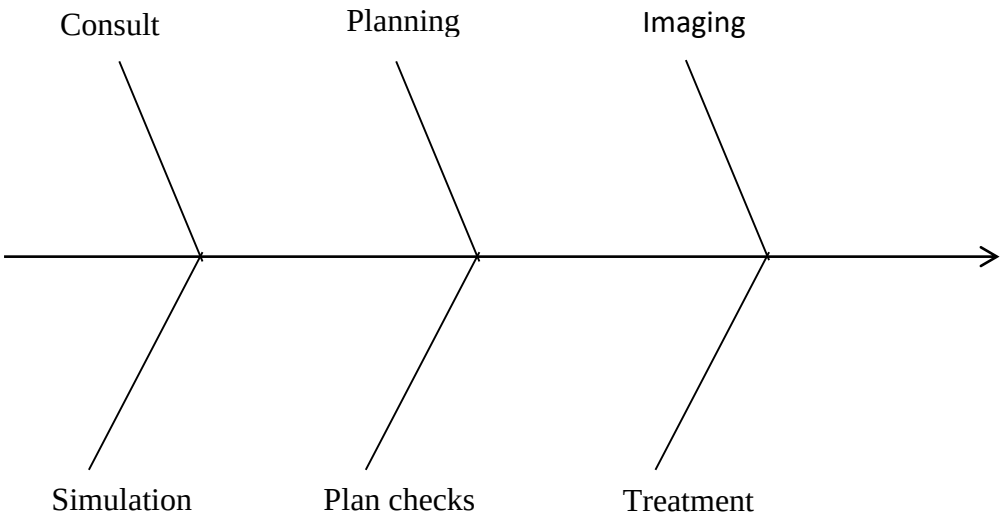

Figure 2.6. An example of a process map in a brachytherapy department [18]

2.3.2. Failure Modes and Effects Analysis (FMEA)

FMEA is a prospective risk management tool applied to analyse potential failure modes within systems [19]. Use of FMEA has a potential of improving on overall processes and in reducing and controlling the risk of injury while using resources sparingly [18]. These failure modes are classified according to their severity and likelihood to occur. Of most importance are the effects of these failures to the final process outcome. FMEA basically seeks to answer these questions [18, 19]:

- What could possibly go wrong at each step? (The failure mode, FM)
- How likely is the cause and resulting failure to occur? (Occurrence, O)
- How likely is the failure to be detected? (Detectability, D)
- How severe could the consequences be? (Severity, S)

The occurrence, O is the probability that a specific cause will result in a failure mode. Occurrence ranges between the numbers 1 and 10 with one being most

Table 2.3. Description of the occurrence (O) from published authors

	Huq et al [20]		Sawant et al [21]	Wikinson et al [22]	Ford et al [23]
Score	Qualitative	Frequency in %			
1	Unlikely Failure	0.01	Very unlikely (<0.01%)	Unlikely ($<10^{-4}$)	Less than every 5 years
2		0.02	Low probability	Somewhat unlikely (<1%)	Every 2–5 years
3	Relatively	0.05	(0.02%–0.04%)	Somewhat likely (1-2%)	Once a year
4	few failures	0.1	Some probability (0.05%-0.4%)	Likely (2-5%)	Several times a year
5		<0.2		Very likely (>5%)	Once a month
6	Occasional failures	<0.5	Moderate probability (0.5%–1%)		Several times a month
7		<1			Once a week
8	Repeated	<2	High probability		Several times a week
9	failures	<5	(2%–5%)		Once a day
10	Failures inevitable	>5	Certain failure (>5%)		Several times a day

unlikely and 10 most likely chances of a failure mode resulting [23], see Table 2.3 for a more detailed description.

Table 2.4 shows description of S, the severity of the effects resulting from a specific failure mode should it go undetected throughout treatment. D is the probability that the failure mode resulting from the specific cause will go undetected and it is also ranked between 1 and 10 with 1 meaning easily detectable and 10 meaning almost impossible to detect. See Table 2.5 for more details.

Wilkinson and Kolar [22] have applied FMEA to HDR brachytherapy treatment planning process. This study found that failure modes associated with image sets, catheter reconstruction, indexer length, and incorrect dose points had the highest ranking in their analysis. The highest ranking referred to here were those with a risk priority number (RPN) scores higher than 20, the failure modes identified related to human error and not to the treatment planning system malfunction. Mayadev et al [24] used the FMEA to identify over 170 failure modes that could potentially impact the patient's treatment using the ring-tandem applicator, see Table 2.8 for results from the above-mentioned study. Tables 2.3, 2.4 and 2.5 give descriptions of severity, occurrence and detectability as per different authors [20, 21, 22, 23].

Table 2.4: Description of the severity (S) from published authors.

	Huq et al [20]		Sawant et al [21]	Wikinson et al [22]	Ford et al [23]
Score	Qualitative	Categorization			
1	No effect		No adverse event (AE)	Grade 1: Mild, asymptomatic or mild symptoms; intervention not required	No effect
2	Inconvenience	Inconvenience	Grade 1: Mild; asymptomatic or mild symptoms; clinical or diagnostic observations only; intervention not Indicated	Grade 2: Moderate; minimal, local, or non-invasive intervention	Dose >5%
3				Grade 3: Severe or medically significant but not immediately life threatening; hospitalization required	
4	Minor dosimetric error	Suboptimal plan or treatment	Grade 2: Moderate; minimal, local or non-invasive intervention indicated; limiting age-appropriate instrumental activities of daily living (ADL)	Grade 4: Life threatening; urgent intervention indicated	Minimal delay in care
5	Limited toxicity or tumour under dose	Wrong dose, dose distribution, location, or volume		Grade 5: Death related to adverse event	
6			Grade 3: Severe or medically significant but not immediately life-threatening; hospitalization or prolongation of hospitalization indicated; disabling; limiting self-care ADL		Allergic reaction; moderate delay in care
7	Potentially serious toxicity or tumour under dose				
8			Grade 4: Life threatening consequences. Urgent intervention indicated.		Dose >20%, reportable

Ibanez-Rosello et al. [25] have applied the FMEA to skin electronic brachytherapy and identified 146 failure modes. 106 of these had RPN ≥ 50 and 30 had S ≥ 7, the multidisciplinary team introduced the quality management tools and performed the FMEA, after which only 21 failure modes had RPN ≥ 50. Periodic update of the FMEA process was deemed necessary to detect future potential failure modes. FMEA and a risk-and-benefit balance impact template (RABBIT) tool were used to develop a quality management program for an ultrasound-based HDR prostate brachytherapy [26]. 35 potential failure modes were identified from seven major processes in ultrasound based prostate brachytherapy. Of these failure modes, RPN scores ranged from 14 to 267, the highest of which was identified to be mislabelling of transfer tubes. It was concluded that most failure modes could be related to human or procedural errors

Table 2.5: FMEA results for a gynaecologic HDR brachytherapy including the number of quality assurance checks [22]

Sub process	Step	Failure Mode	Failure Effects	O	D	S	RPN	No of QA checks
SIM	Dosimetry informed	Not performed	Delayed treatment time	4	6	8	192	0
SIM	Transportation	Applicator moves	Patient injury; incorrect dose distribution	3	8	8	192	2
Tx planning	Physics check	Not detecting errors	Incorrect dose distribution	2	10	9	180	0
SIM	External fixation	External fixation device not properly tightened	Patient injury; incorrect dose distribution	3	10	6	180	1
SIM	External fixation	External fixation clamp not adhered to board	Patient injury; incorrect dose Distribution	3	10	6	180	1
Tx planning	MD contours	Incorrect CTV	Incorrect dose distribution	2	10	8	160	1
Insertion	Pause	Not performed	Wrong patient, incorrect bladder fill	2	10	7	140	2
SIM	External fixation	Patient moves	Patient injury; incorrect dose distribution	5	3	8	120	2
Tx planning	Printout verification	Inadvertent change in dwell (e.g., mis-click in dwell control window) after MD plan review before printout/export	Incorrect dose distribution	4	9	3	108	3
Tx planning	Source exchange	Incorrect activity entered at source exchange and entered into decay table	Incorrect dose distribution	1	10	9	90	1
Tx planning	Revised plan	DVH constraints not met and not noticed	Incorrect dose distribution	2	10	4	80	3
Treatment delivery	MD clinical status check	Does not remove special devices like rectal tube	Incorrect dose distribution	4	10	2	80	2
Treatment delivery	MD clinical status check	Incorrect bladder fill	Incorrect dose distribution	4	10	2	80	2
SIM	Image export	Wrong image data set	Incorrect dose distribution	1	7	8	56	2
SIM	External device fixation	Applicator movement during transfer before treatment	Patient injury; incorrect dose distribution	3	2	8	48	2

Table 2.6: Description of the detectability (D) from published authors.

	Huq et al [20]	Sawant et al [21]	Wikinson et al [22]	Ford et al [23]
Score	Probability of failure going undetected (%)			
1	0.01	Very unlikely (i.e., always detected) (<0.01%)	Very likely: Software/hardware interlocks (>90%)	
2	0.2	Low probability (0.2%–0.5%)	Likely (60-90%)	Very easy to detect
3	0.5		Somewhat likely (20-60%)	
4	1.0		Unlikely (10-20%)	Easy to detect
5	2.0	Some probability (1%–2%)	Highly unlikely (<10%)	
6	5.0	Moderate probability (5%–10%)		Mildly difficult to detect
7	10			
8	15			
9	20	High probability (15%–20%)		
10	>20	Certain failure (impossible to detect) (>20%)		Impossible to detect

2.3.2.1. Fault Tree analysis (FTA)

An FTA is a prospective risk assessment tool which can be applied to prevent incidents that are known to have already taken place, from happening again in future or to prevent those that could potentially happen [27]. The former part of its application is very similar to root cause analysis (RCA). The difference between the two, however, is the fact that RCA would usually make use of a review of publicly available incident database to explore the range of incidents that can occur [28]. FTA can be regarded as a hypothetical RCA where an actual event starts an RCA and postulated failure modes are used to start an FTA [29]. These failure modes would be those prioritized after performing the FMEA.

FTA focuses on one undesired event, the failure mode, and provides a method for determining the causes of the event [30]. The undesired event or the failure mode is referred to as the top event in the context of FTA. This top event is then deduced using a binary system to arrive at the primary event. There exist some intermediate events between the top event and the primary event. These intermediate events are fault events that occur as a result of one or more prior actions through the OR and AND logic gates. The use of an OR logic gate means a top event can result if any of the intermediate events fails. The use of an AND logic gate means the top event will result if a combination of some intermediate events fails, see Figure 2.7.

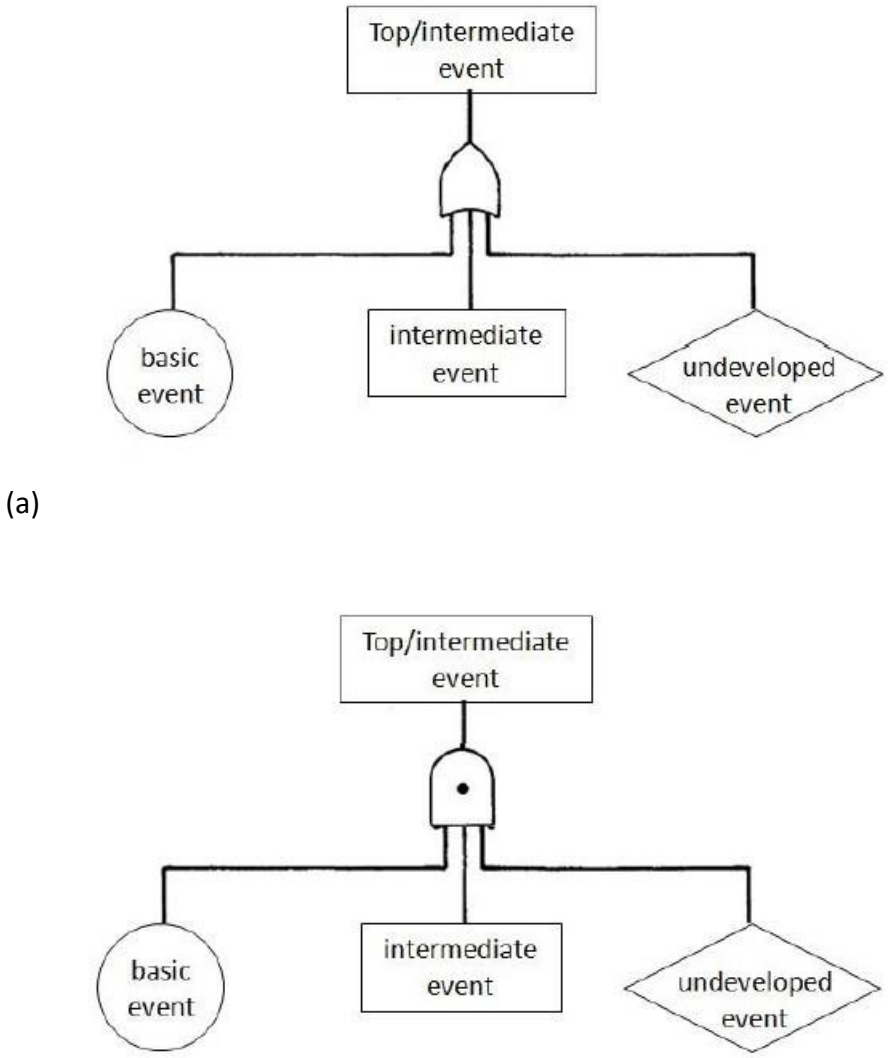

Figure 2.7. Basic events structure of fault tree analysis for (a) the OR gate and the (b) AND gate [30]

Ekaette et al [28] have applied the FTA on a radiation treatment system which consisted of assessment, preparation, treatment, and follow-up. The fault trees were populated by using subjective probabilities from experts and comparing results with incident report data. Both the FTA and the incident report analysis revealed simulation tasks to be most prone to incidents, and the treatment prescription task to be least prone to incidents, see Figure 2.8 below.

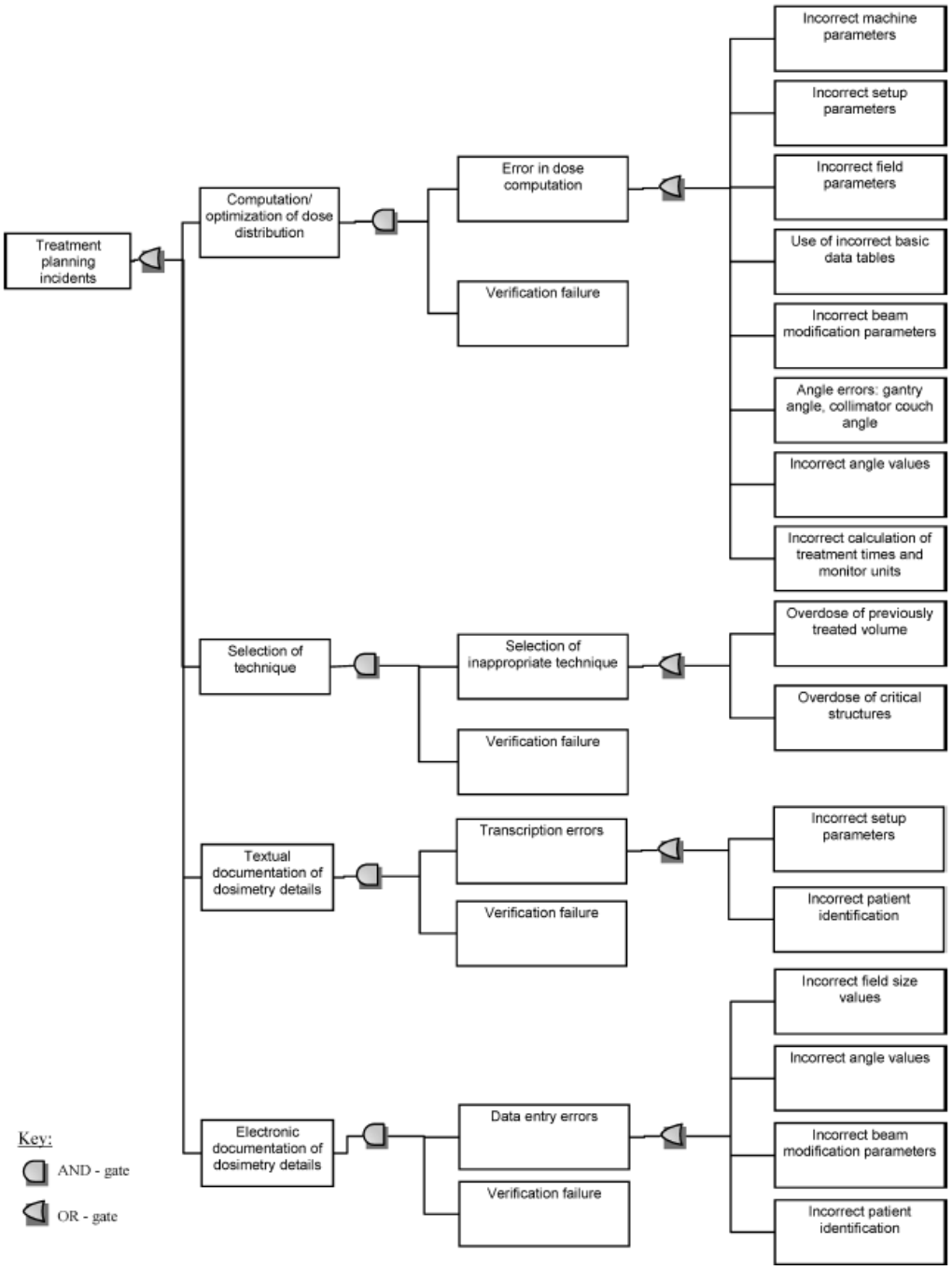

Figure 2.8: Fault tree analysis for a treatment planning process [28]. FTA was employed here to assess the probability of radiation misadministration in a large cancer center.

Chapter 3 Materials and Methodology

For this research, a gynaecological HDR brachytherapy process in a South African private hospital was chosen as a starting point for an investigation into identifying potential improvement in its quality management system. The brachytherapy unit in this hospital is a 25-channel, Cobalt-60 after loading unit, Eckert & Ziegler Bebig's Saginova [31], illustrated in Figure 3.1.



Figure 3.1: The Saginova afterloading unit used in the department [31].

The after loader is connected to a SagiPlan® 2.0 [32] treatment planning system (TPS) and is housed in a linear accelerator bunker. The radiology department CT scanner is used for the brachytherapy imaging/planning purposes. This unit is used mostly for the treatment of gynaecological cancer of the cervix and vaginal wall, Figure 3.2 shows the cervical and vaginal applicators typically used at this facility.



Figure 3.2: Applicators used at the brachytherapy department in the selected private hospital. These are the Fletcher (left), ring-intrauterine (IU) (centre) and the sorbo/sorbo-IU (right) applicators [31].

This research is based on the workflow or the process map of this department. In this section, the data collection of the process map for the HDR brachytherapy clinic is described. The procedure of how the data was collected for the application of FMEA to this process map is also described, followed by the application of the FTA on the selected highest-ranking failure modes.

3.1. The Gynae HDR Brachytherapy Process Map Data Collection

As part of the proposal submission process, it was recommended that we apply for ethics clearance in order to proceed. The application was completed with the human research ethics committee (non-medical) and approval was granted, appendix A. proof was sought by the ethics committee that the hospital where the data collection occurred also approves of the study. The hospital approved and in their approval letter, it was stipulated that the name of the hospital should not be mentioned anywhere in the write up and documentation of this study. Instead of mentioning the hospital name, it was advised that we use “private hospital”.

The participants in this study were issued with a questionnaire template to fill in a brachytherapy process from patient consultation to treatment, appendix B1. These participants comprised experienced (minimum of 6 years’ experience) cross

functional group of 5 Medical Physicists (MP), 4 Radiation therapists (RT) and 1 Radiation Oncologist (RO). The participants were instructed to use their experience of having worked in a brachytherapy setting, in addition to their knowledge of their current environment. See appendix B1 for the process map template handed out to the members of the cross functional group. They were all given up to a week to complete and return the questionnaires. The questionnaires were then collected and documented for analysis.

Two weeks after the questionnaires were returned, the cross functional group workshop was arranged with a purpose to compare and consolidate all questionnaires into one comprehensive process map for the HDR brachytherapy of this hospital. See the results section for details of this, which constitutes a consensus process map. The process map has been expanded by listing down key individual tasks for each sub-process

3.2. The FMEA Data Collection

After the establishment of the consensus process map, a date was set for the participants to receive a presentation and be workshopped on the risk analysis methods. They were taken through some examples on how the FMEA works and how to apply it to a given workflow or process map. By the end of the session the participants were in a position to apply these methods and issued with questionnaires to go and complete on their own. These worksheets were based on the AAPM's TG 100 report [20] system of applying the FMEA. Appendix B2 shows the illustration of this questionnaire template.

The FMs were based on constantly asking the question "what could go wrong" at each individual task of each sub-process. Participants were given up to a month to complete and return the questionnaires. There were also follow-up meetings where any of the participants would make contact and indicate that they would like to be taken through the FMEA method again so they could correctly complete the

questionnaire. These methods were new to all participants, and therefore required effort, attention to detail and commitment.

The questionnaire was issued in a form of an excel spreadsheet where participants had to complete according to the instructions given. The purple box in Appendix B2 delineates a field where a failure mode is to be typed in. The red box shows dropdown list options for the occurrence (O), severity (S) and detectability (D) which are readily populated with user-friendly options. The green box delineates a field where a formula for RPN has been inserted for automatic calculation once all the three fields have been populated.

3.3. The FTA Data Collection

In the same workshop that was held for the FMEA, the participants were taken through how FTA works. Examples were used to help participants understand in-depth this method and were issued with questionnaires to go apply the FTA on the highest-ranking failure modes identified during the FMEA exercise. Appendix B3 shows an illustration of this questionnaire template. In the same way as for the FMEA process, some participants reached out to seek more clarity on applying the FTA. Each participant was given up to a month to complete and return the questionnaires.

As seen on the template in appendix B3, the fault tree started off with a failure mode on the left, with the causes of those failures towards the right. The events to the right were generated by constantly asking what could be the cause. The level of detail was kept to a point where the events couldn't be developed further to the right. The two logical gates "AND" and "OR" were used to link the FMs to their causes. The use of the "OR" gate implied that any of the cause could result in a failure mode. The "AND" gate implied that a combination of two or more causes had to occur for the failure to propagate through the gate.

Chapter 4 Results and Discussion

This chapter reports and discusses the results of the data received from the 10 participants comprising a multidisciplinary team of brachytherapy professionals. These participants were selected based on the experience each had working in a brachytherapy department and their varied involvement in the private hospital under investigation. There was 100% participation and return rate on the phase one of the study and about 80% return rate on the phase two of the study, despite the active follow up to improve the return rate. This 80% included representation from each professional group. The reduced return rate on the FMEA and FTA part of the study was most likely due to the level of involvement required from each participant from the questionnaires versus their other commitments and availability.

4.1. The Brachytherapy Process map

The gynaecological brachytherapy process map is presented in Figure 4.1. It represents a consensus workflow of this brachytherapy unit with inputs from all the cross-section expert group selected for this research.

This is a resultant workflow where some steps have been combined into one overarching step, for example: contouring, planning and evaluation were jointly put in a step called “treatment planning”. Each step in the workflow will be fully explained in the next sections.

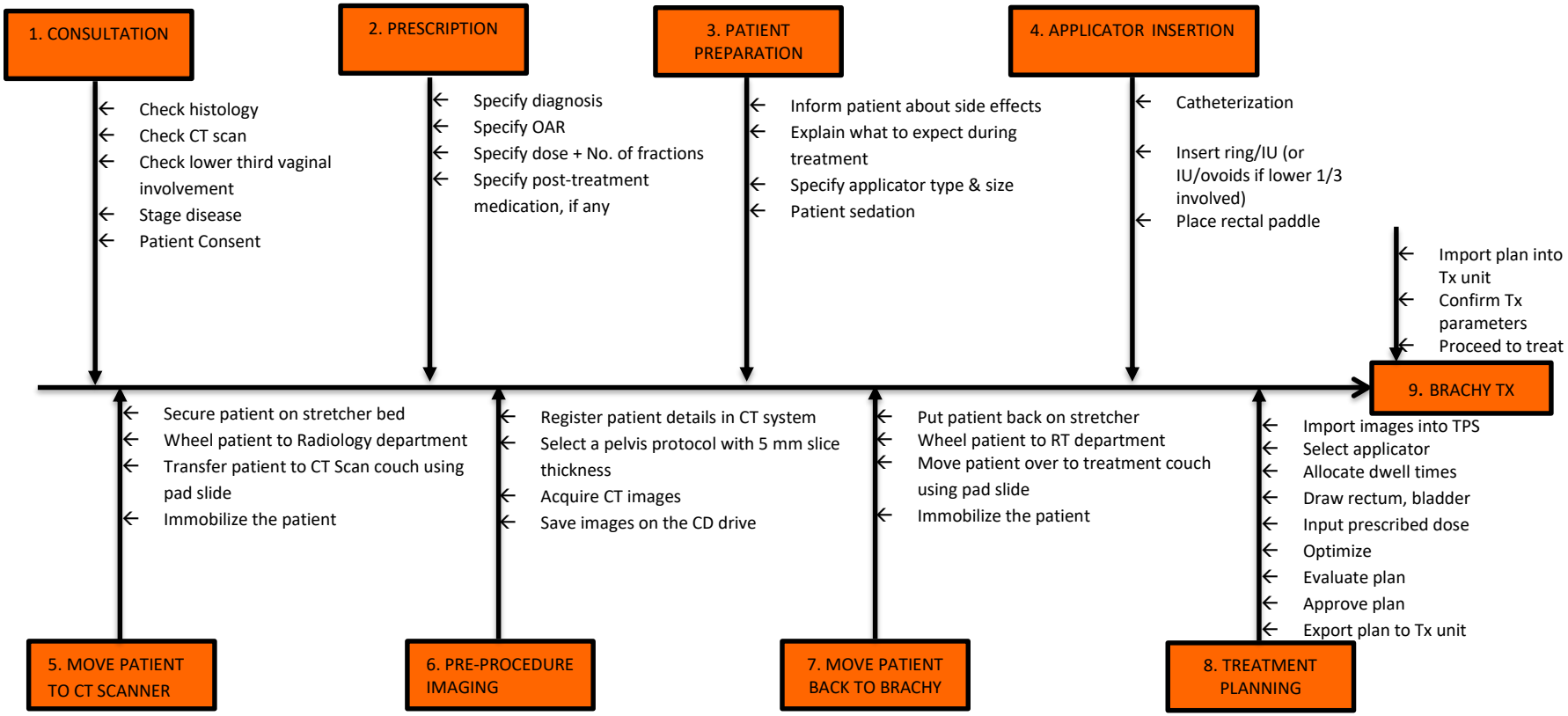

Figure 4.1: Consensus brachytherapy process map

1. **Consultation**

   On the first encounter with the radiation oncologist (RO), the patient would have been referred by a general practitioner or a medical oncologist or a surgeon. The RO would do a full patient examination including reviewing the diagnostic images and radiology reports to help in determining the nature and extent of the disease and then consequently assign a tumour stage. Patient consent is also done at this stage.

2. **Prescription**

   With the patient's disease stage known at this point, the radiation oncologist specifies the prescription dose, number of fractions and the organs at risk to be reported on. The doctor would also instruct the nurse about any post-treatment medication, if applicable.

3. **Patient Preparation/Examination**

   This is the part of the process where the patient will be informed about what to expect during their treatment, the side effects, etc. Shortly after the patient brief, the oncologist does their own examination on the patient to determine the size, shape under sedation while on the linear accelerator couch.

4. **Applicator insertion**

   The radiation oncologist determines the ring diameter, the IU length and inserts the applicator into the patient under sedation. The choice of applicator depends on factors such as the desease staging, tumour size, vagina length, etc.

5. **Transfer patient from brachytherapy suite to radiology department**

   With the applicator in place, the patient would be wheeled from the brachytherapy department to radiology for a CT scan.

6. **Imaging pre-procedure**

   The patient is moved from a stretcher through a pad slide, over to the CT scanner couch and images are taken. A 5 mm slice thickness is used with a pelvis imaging protocol selected. The patient is imaged with the flat couch-top attached to the CT bed. The images are then saved on a CD drive for later use.

7. **Transfer patient from radiology department to brachytherapy suite**

   At this stage of the workflow the patient is transferred back to the stretcher and wheeled back to the brachytherapy department where treatment is going to take place.

8. **Treatment Planning**

   A new patient is created in the brachytherapy TPS and CT data imported from the CD. The physicist responsible for planning would select the appropriate applicator from the TPS library, align in properly in all planes, allocate some dwell times then calculate. An isodose distribution would appear around the applicator showing the position of point A on both left and right. The organs at risk, rectum and bladder, would be delineated by the physicist or an oncologist. The optimization process would then begin until the oncologist is happy with the sparing of organs at risk

9. **Brachytherapy treatment**

   Treatment plan is imported into the treatment unit, parameters confirmed against those in planning system for data transfer and treatment commences.

This consensus process map is typical for most brachytherapy departments, sub-processes which differ from one to the next depending on custom resources available. Wadi-Ramahi et al. [33] put together a 14-step image-based brachytherapy process and only chose 7 sub-processes which was in line with their aim to

investigate failure modes that could result in wrong volume being treated. The process map in this study catered for two different imaging scenarios, the first scenario is one where a CT scanner in a separate room is used and the second is one where the brachytherapy suite and a cone beam computed tomography (CBCT) are in the same room. Reason to assess both scenarios was to investigate potential applicator movement during patient transportation. Contrary to Wadi's study, our aim was to subject all sub-processes to investigation on their potential to result in dose misadministration. Mayadev et al. [24] focused on all steps in the major process including post-treatment procedures such as patient discharge. Their study went on to particularly investigate the treatment planning sub-process with the aim to reduce reportable events.

4.2. Failure Modes and Effects Analysis

Sixty-four (64) failure modes were identified during the FMEA process. After thorough analysis, it was found that these could be "consolidated" or reduced to twenty-two (22) unique FMs. This consolidation was a result of some FMs being scored under similar headings which were then merged to one and the average of individual O, S and D values were taken to calculate an average RPN from the product of the three ($O \times S \times D$). The RPN values ranged between 18 and 216 and linearly dropped with failure mode ranking, Figure 4.2. There are 8 highest ranking FMs which are greater or equal to 96, a value at which the curve reaches a plateau before continuing with its linear fall off.

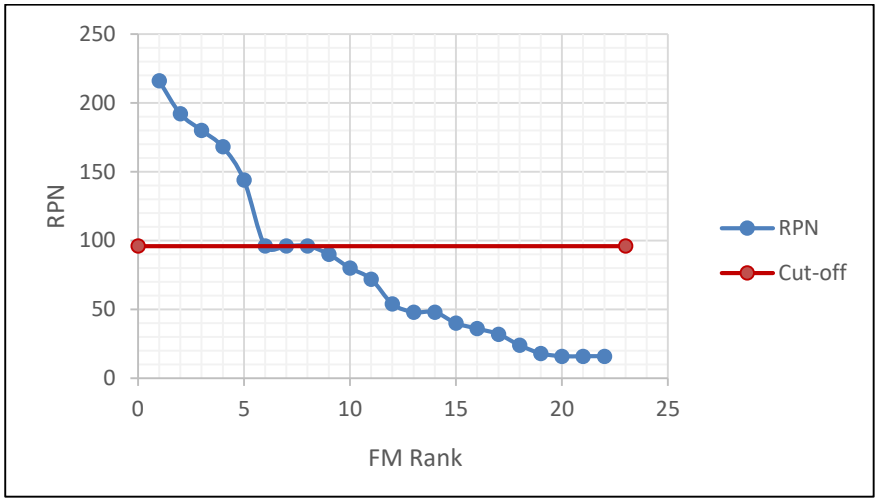

Figure 4.2. Distribution of RPN over FM ranking, demonstrating the cutoff value for RPN.

Although every potential hazard requires attention, AAPM's TG 100 [20] recommends that the highest 20% values of RPN be prioritized in terms of managing the risk. Mathematically, 20% of 22 is 4.4, resulting in approximately 5 of the highest-ranking failure modes being chosen for further analysis. As could be seen in Figure 4.3 across the distribution of all RPN's, there's five significant bars that peak higher than the rest of the failure modes. These bars represent, in descending order: applicator in wrong position, incorrect source strength, incorrect examination, incorrect contouring and incorrect doses. These five FMs will be discussed below.

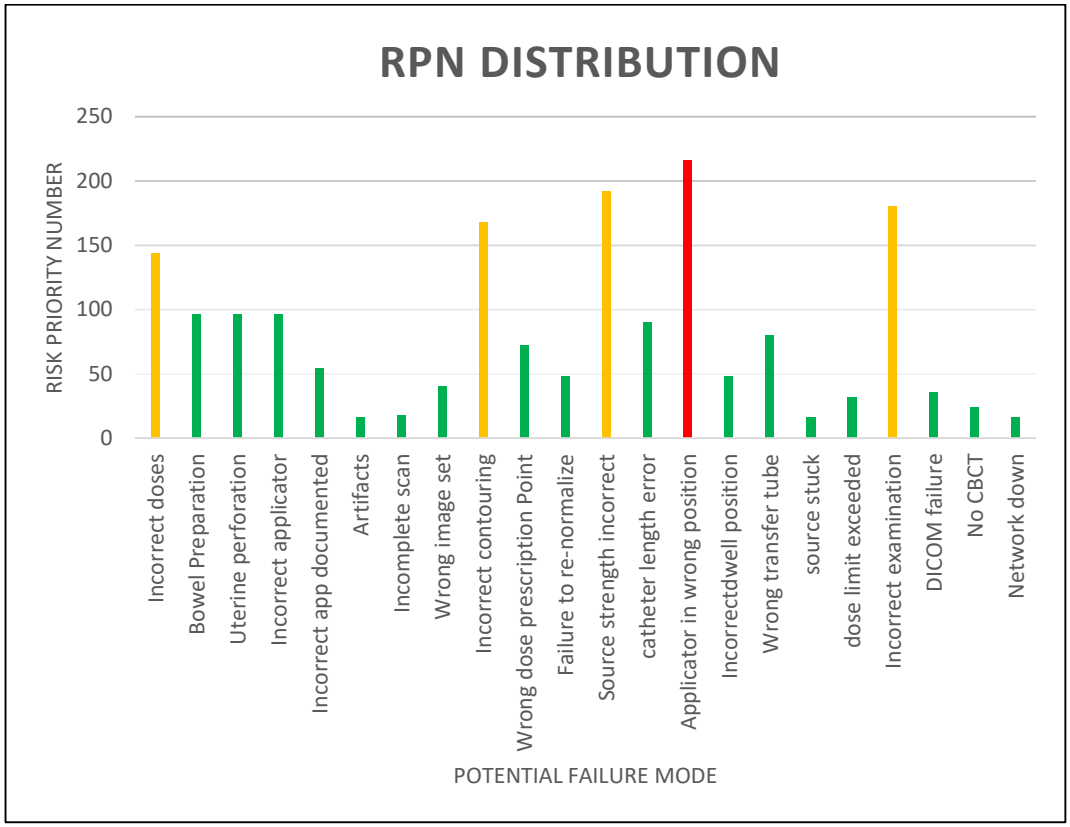

Figure 4.3. A distribution of RPN values against the potential failure modes.

Instead of ranking FMs based on their RPN values, some authors [24, 30, 34] have opted to use severity to rank potential failure modes, or both. A distribution of severity over FM ranking, Figure 4.4, has been plotted. It can easily be seen in this plot that 16 of the 22 FMs have S values of 8 and 9. This result suggest that all the 16 FMs should be analysed further which would not be very practical for the results sample as these account for over 70% of all failure modes. The RPN incorporates all the S, O and D values which statistically distributes the error across, and the analysis of results in this dissertation will be based on that.

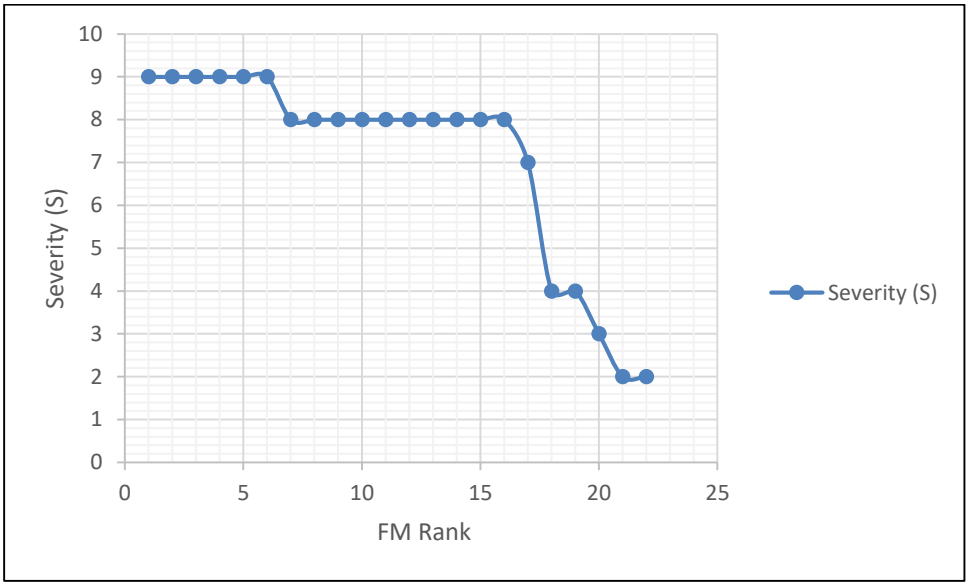

Figure 4.4. A distribution of severity values against the potential FM ranking.

The failure modes are categorized by their RPN value in Table 4.1. These scores are marked using three different colour codes namely red, yellow and green. The red colour represents high scores, which are those higher than 200, the yellow represents intermediate scores which are those between 100 and 200 and green represents low scores which are those lower than 100, which include the cut-off values and less. “Step” refers to one of the steps in the consensus process map. “Step description” (an optional field) briefly describes what the step entails. “Potential failure modes” refer to what could go wrong in this process. “Potential causes of failure” refer to what could result in the potential failure modes and the potential effects of failure refers to what could be the effects should the failure mode propagate through.

Table 4.1: The highest 20% of the RPN values in the FMEA. The rest of the FMEA results can be viewed in appendix A.

Rank	Step	Step description	Potential failure modes	Potential Causes of failure	Potential effects of failure	Avg. O	Avg. S	Avg. D	Avg. RPN
1	Applicator insertion	The applicator is placed inside a patient for source transportation & dose distribution.	Applicator in wrong position	Patient movement, moving in between departments	Incorrect dose, Over or under dosage	3	8	9	216
2	Source Exchange	Calibration of the new radioactive source after delivery, before treatment	Source strength incorrect	Incorrect source decay, well-type chamber error, Typographical errors, Manufacturer's error on certificate	All affected patients overdosed or under dosed.	8	6	4	192
3	Consultation	The first appointment of the patient with the Radiation Oncologist.	Incorrect examination	Inattention by the referring Physician or Oncologist.	Incorrect disease staging which could result in wrong prescription, wrong dose	9	5	4	180
4	Treatment Planning	Delineation of organs at risk on the CT dataset.	Incorrect Contouring	Physician inattention, unfamiliarity with planning system, lack of anatomical atlas, inadequate imaging platform	Disease recurrence, Excessive toxicity to innocent bystander organs. Dose over-estimation	3	7	8	168
5	Prescription	Specification of dose by the RO to a desired point/volume	Incorrect doses	Typographical errors on prescription sheet or TPS entry, inattention by staff.	Wrong dose, biologically insufficient or excessive prescription	2	9	8	144

4.2.1. FM #1: Applicator in wrong position

According to its occurrence scoring of 3, this FM is less likely to happen, but the severity and detectability values raised its RPN score. The severity of 8 means that should the applicator be inserted wrongly; it could result in a dose difference of up to 20% which would significantly affect the patient's toxicity or disease control. The high value for detectability seems a little overrated, since it should be visible on the image if the applicator is not in the intended position. The high value for detectability, however, could hold as a result of human performance or oversight. The main potential cause of the displacement of an applicator at this point is the movement of a patient in between brachytherapy and radiology departments for CT scanning. Further causes to this FM will be sought using the FTA. Though not all form part of the top 5 highest ranking FMs, there's a noticeable trend of those that involve the applicator, Figure 4.5. This makes "applicator insertion" in the process map, one of the most vulnerable sub-processes.

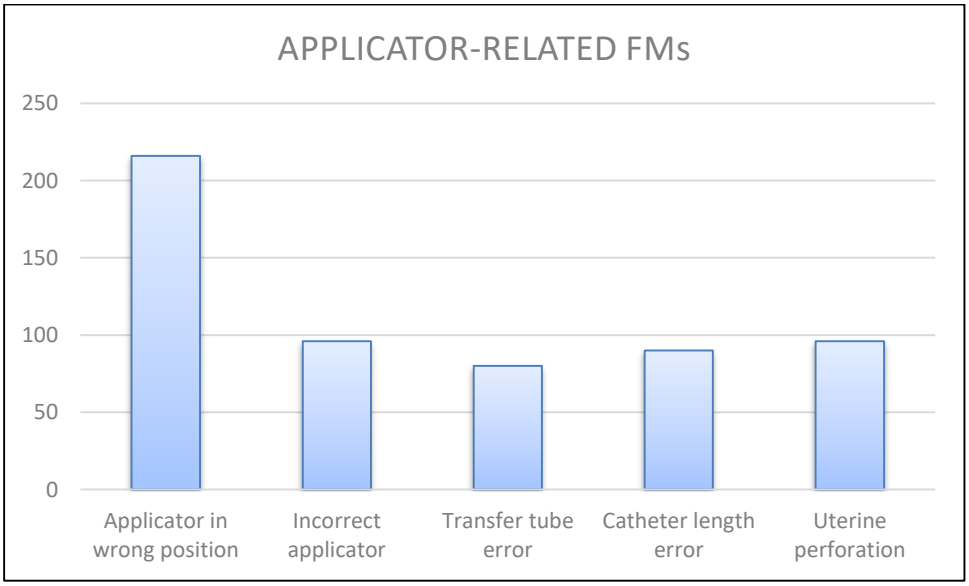

Figure 4.5. A distribution of RPN values over applicator-related failure modes.

4.2.1.1. FTA: FM #1

This section aims at further analysing the above FMs, by relating them to possible cause (s) to a level of detail that could possibly not be developed further. The FTA is done to inform the development of a robust QA program, having identified the weak points along the work-flow.

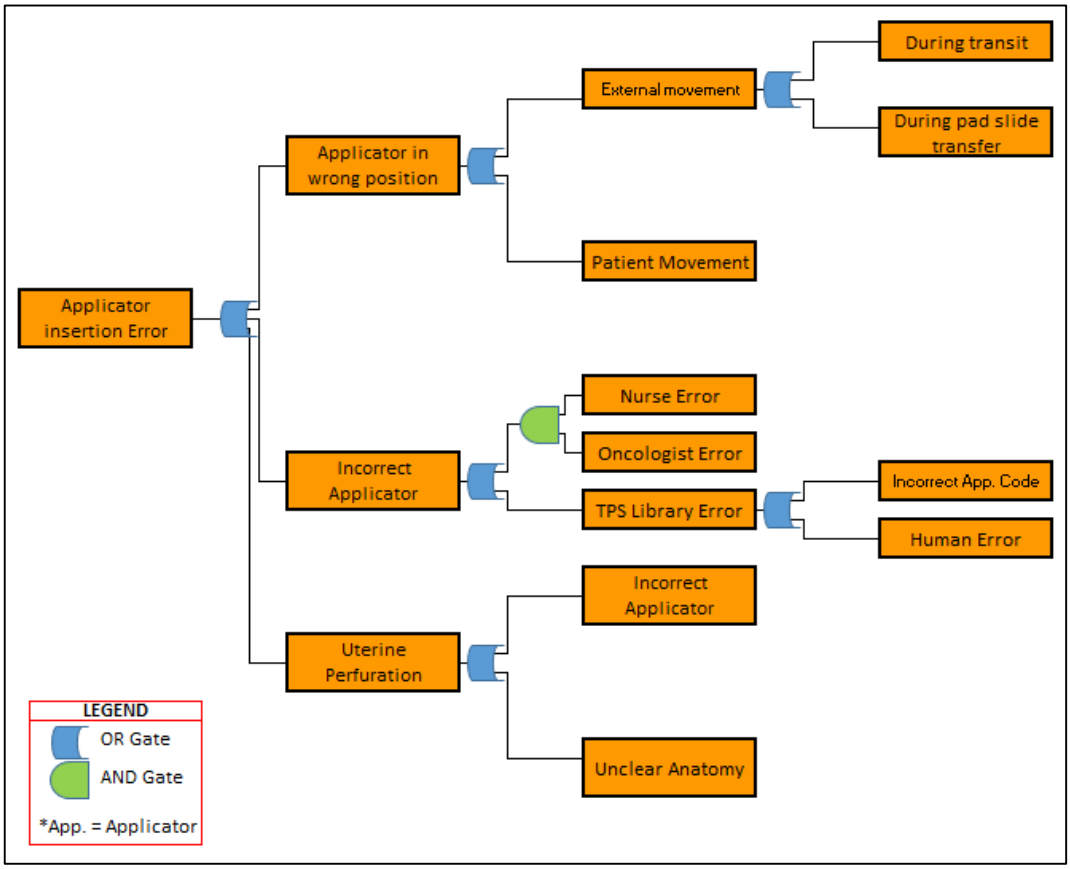

Figure 4.6. The fault tree analysis for applicator in wrong position.

An applicator being in a wrong position would result in inaccurate dose distribution, which could worsen due to high dose gradients in brachytherapy. The incorrect position would be as a result of wheeling the patient in between the radiology department for a CT scan, and back to the radiotherapy department for brachytherapy. This positional offset could result in high dosimetric discrepancies depending on how far off the shift is and the inherent fall-off distribution of the dose.

The FTA starts off with the applicator insertion error on the left, which is linked to three possibilities, namely applicator in wrong position, incorrect applicator and uterine perforation with the OR gates as shown in Figure 4.6. This means that an applicator error could be as a result of either an applicator being in a wrong position, a wrong applicator being used for the procedure or a patient suffering uterine perforation. An applicator displacement due to a patient's movement was found to be a result of either the absence of a fixation device or adequate vaginal packing. The applicator in a wrong position FM was further developed into two possibilities which are an external movement or a patient movement. An external movement could be a result of transportation of the patient via a stretcher or during immobilization of the patient pre- or post-imaging. The use of an incorrect applicator was developed into three possibilities which are errors from a nurse and a radiation oncologist or treatment planning library. The use of the AND gate suggests that a wrong applicator could result if both the nurse and RO would have committed human error in the choice of an applicator. The TPS library error was shown to be a result of an incorrect applicator code or human error.

Figure 4.7 shows a fault tree for FM #1 with interventional actions to prevent all those identified causes. There are 5 interventional actions that work as gatekeepers or prevention to FM #1. These interventions include 4 new items introduced to the workflow and 1 quality assurance item (a checklist), which are as follows:

- Use of CBCT for brachytherapy imaging and treatment planning. This means that instead of transporting the patient between the brachytherapy suite and the radiology department, the CBCT could be used as an imaging modality. See Appendix A2 for CBCT procedure.
- In cases where a radiology CT is preferred for brachytherapy purposes, for example when fusion with other modalities is to be performed, a fixation device should be used to hold the applicator in place to avoid movement during transportation. The CBCT could also be used to verify position at the time of treatment.

- To avoid instances where either the radiation oncologist or a nurse or both err in the choice and/or handover of applicator, a clinical checklist is implemented where all necessary equipment or instruments is listed and ticked off prior to each procedure, See Appendix A3.
- "Unclear anatomy" could result in uterine perforation because the radiation oncologist performing an insertion cannot locate the cervix of the patient. The use of either a mobile C-arm with fluoroscopic capability is recommended for use during insertion, or
- Placement of a pelvic sleeve prior to the brachytherapy procedure. The pelvic sleeve is also known as a smith tube.

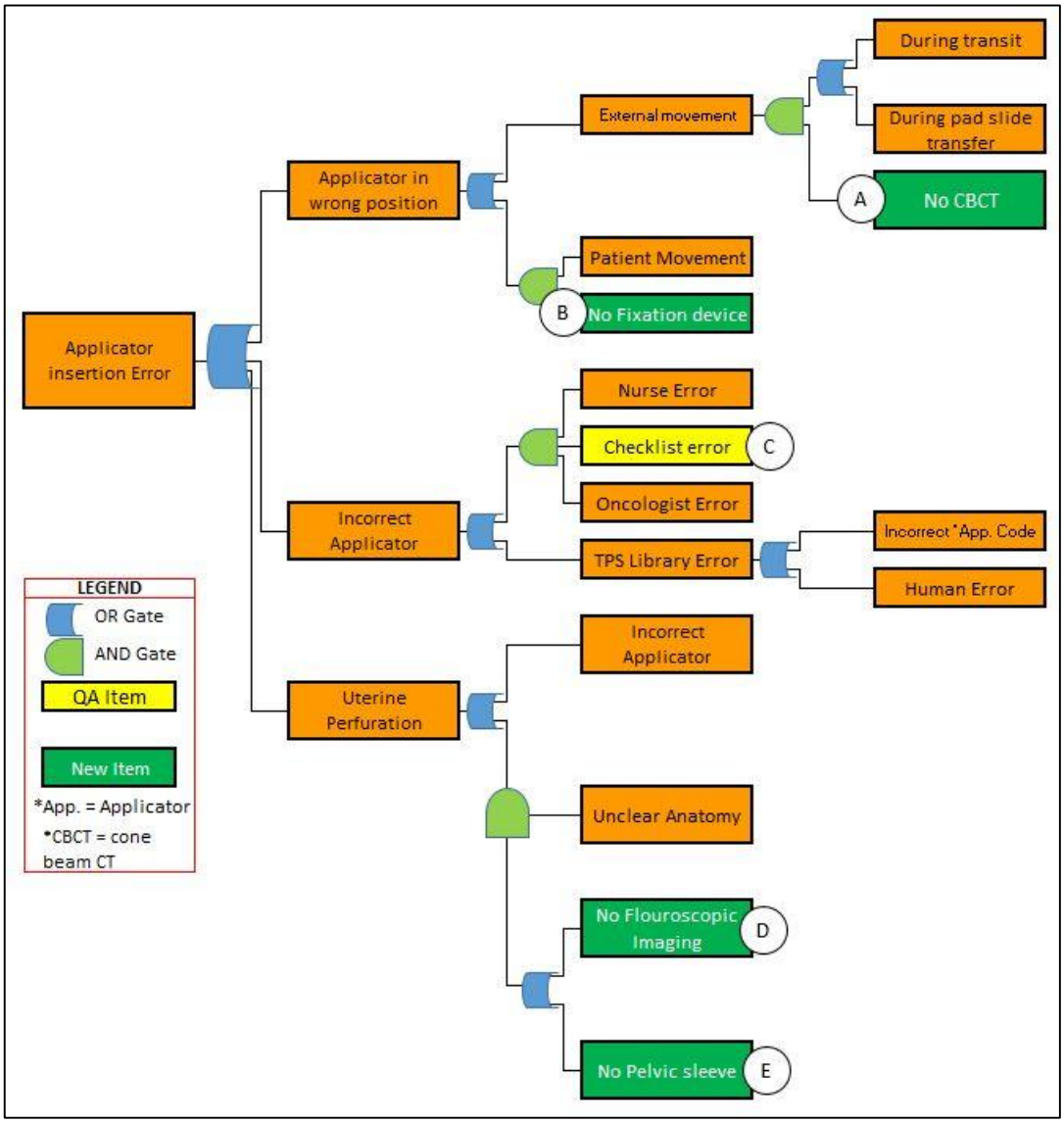

Figure 4.7. The fault tree analysis for applicator in wrong position, with interventional actions.

The first 2 interventions converge with Wadi-Ramahi's [33] workflow set up where there's an option to either use a CT scanner located elsewhere in the hospital or the CBCT housed in the same room as the brachytherapy unit. Their study employed both FMEA and FTA to detail the role of image guidance in the delivery of quality intracavitary brachytherapy. Their study also implemented pre-treatment verification to assure the applicator hasn't moved relative to OAR. Mayadev et al. [24] applied FMEA and FTA in their study and found out that transporting patients in between imaging and treatment rooms could result in applicator displacement, which also converges with the findings of this dissertation. Four FMs in Mayadev's

study involved inability to detect applicator movement during transportation, which is a similar result to the illustration in Figure 4.5 of our study.

4.2.2. FM #2: Incorrect source strength

This FM falls outside of the clinical brachytherapy workflow, but is directly linked to the workflow through the daily QA. This is, however, one of the most important steps in the delivery of the quality brachytherapy service and will be discussed here. The scoring for occurrence seems overrated as calibration of a brachytherapy source happens occasionally. In the case of the hospital in question a Cobalt-60 source only gets exchanged once in five years. Also the fact that the vendor's calibration gets confirmed on site by the user reduces the risk. A score of 3 would sound more reasonable, which translates to once a year. The severity, on the other hand, could be scored a little higher than the current 4 as an undetected, incorrect source strength could have a significantly negative impact on all patients treated with that source.

4.2.2.1. FTA: FM #2

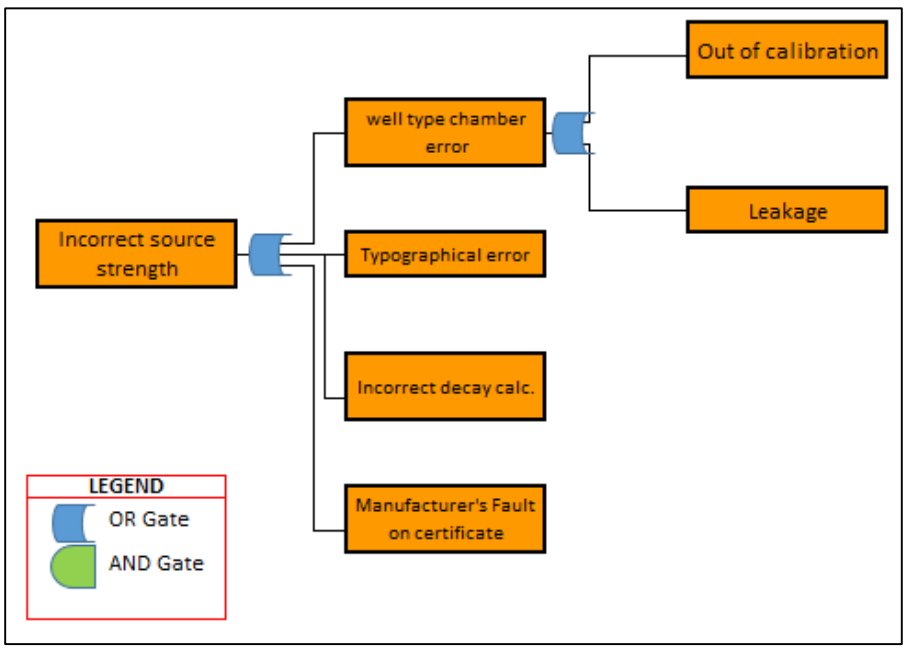

Figure 4.8. The fault tree analysis for incorrect source strength.

An incorrect source strength would dosimetrically affect every patient to be treated with that source if the error propagates to treatment. According to Figure 4.8, incorrect source strength could be caused either by a faulty well type chamber, typographical error on the planning system entry, incorrect calculation or manufacturer's error on the source certificate. It has been found that a faulty well-type chamber could be a result of it being out of calibration, or leakage of the cylinder. The incorrect calculation was found to have been a result of either a human typographical error on the formulae used for source decay calculations.

Figure 4.9 illustrates FTA on FM #2, showing interventional actions in the form of quality assurance checks. The use of the AND gate suggests that those causes will only result in the FM only if QA fails at that part of the process.

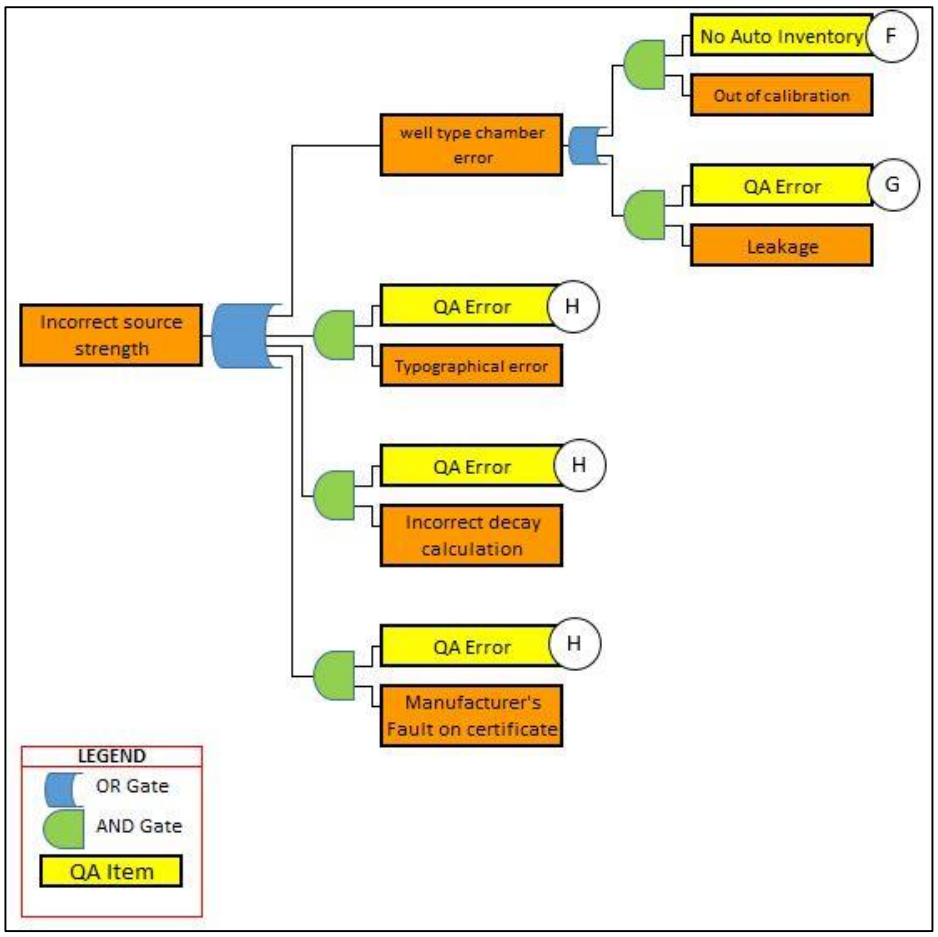

Figure 4.9. The fault tree analysis for incorrect source strength with interventional actions.

In summary, the 5 QA checks that were implemented according to Figure 4.9 are as follow:

- Automated Inventory to avoid usage of equipment out of calibration
- Chamber stability check to assure it is in good dosimetric condition
- Second check after entry in planning system in case there's typing error
- QA on source calibration spreadsheet and all manual entries into treatment console unit and TPS.
- Source calibration that compares to manufacturer's within 5%

To avoid usage of equipment that is unknowingly out of calibration, a self-automated equipment inventory was developed that will notify a responsible person of any action required. This inventory should contain all the necessary information about all brachytherapy, physics and clinical equipment. It should state the name, make, model and serial number, last calibration and due dates. This spreadsheet was developed in such a way that it can send an email to the intended recipient. This inventory should be updated whenever new equipment has been acquired in the department, and it should be installed on a central computer which is always connected to internet, preferably a server computer with backup.

AAPM's TG 56 [3] recommends that quality control be performed on any well-type chamber prior to its use. This is to be carried out using a long-lived source like cesium-137. The response of the well chamber should display variations of not more than 1%.

Prior to using a newly calibrated source for brachytherapy treatment, the source strength needs to be entered into the treatment planning for dose calculations. An incorrectly entered source strength will result in incorrect isodose distributions which will result in incorrect scaling factor compared to the treatment unit. It is recommended that a second person checks that the correct source strength has been

entered before the first patient can be treated, following the newly developed checklist.

An incorrect source decay formula can result in an error in source strength calibration. It is recommended that the formulae used in the spreadsheet be inspected and locked for future use, see checklist in appendix A3. Ensuring the integrity of formulae in all spreadsheets with calculations it is crucial to prevent individuals from tempering with the spreadsheet by way of password lock. It is further recommended that the new source strength verification be performed using a preferred method, and the result should be within 5% of that in the certificate from the manufacturer, and the manufacturer's value should be entered into the treatment control and planning systems. In cases where the agreement between measured and manufacturer's values is more than 5%, further investigation should be carried out. This investigation could either be a use of independent equipment to repeat the measurement or take it up directly with the manufacturer.

4.2.3. FM #3: Clinical Judgement Error

The third ranking failure mode was identified at the consultation stage, where an initial examination of the patient is performed by the RO. The occurrence of this failure was scored 9, which suggests that it could potentially happen daily. The severity was scored 5 which suggest that if this failure mode results there could be non-optimal care to the patient. The scoring of 4 for detectability suggests that it should be easy to detect this kind of potential failure mode from occurring. Even though this is scoring high in terms of the RPN value, one could argue that it is not very likely since it is fairly easy to pick up. At this stage the RO is supposed to examine both the patient and their imaging or pathologic results which should be routine for an experienced radiation oncologist. Chances of misinterpreting any of those are, though possible, very unlikely.

4.2.3.1. FTA: FM #3

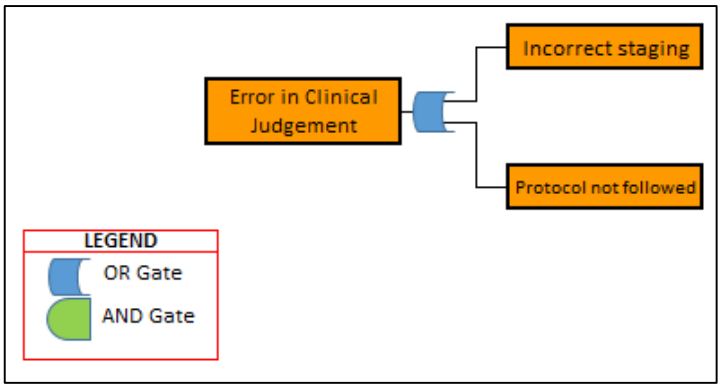

Figure 4.10. The fault tree analysis for error in clinical judgement

It has been found that an error in clinical judgement could mean the patient disease was incorrectly staged, or could be that protocol was not adequately followed, Figure 4.10. Peer review has been identified as a gatekeeper for both the potential causes of this FM, as shown in Figure 4.11.

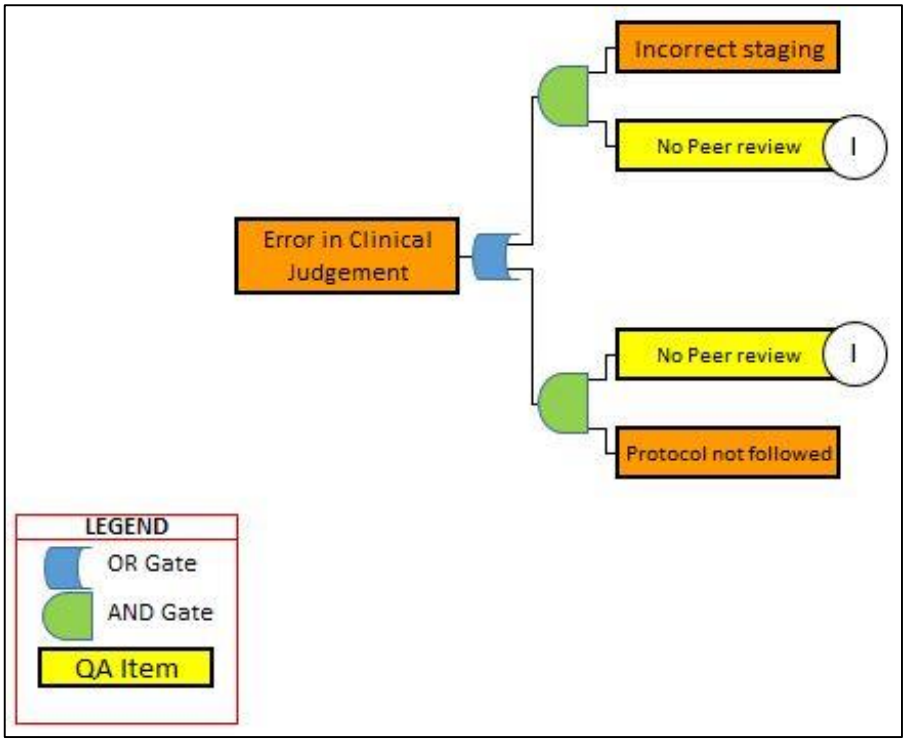

Figure 4.11. The fault tree analysis for error in clinical judgement, with interventional actions.

Peer review as seen in the above figure, is a QA tool suggested for this clinic to implement in order to mitigate the identified FMs. Appendix A2 details how peer review can be established.

Peer review of new patients was recommended, which agrees with recommendations by Minh-Phuong et al. [35] who concluded that gynaecologic brachytherapy peer review may enhance the quality of treatment by allowing for implant optimization and formal review of challenging cases. TG 40 [2] also recommends that a multidisciplinary team should attend peer review sessions where everything about the patient is discussed, including medical history, tumour staging, treatment strategy, etc. Marks et al. advise that each radiation oncology facility should tailor-make their own multidisciplinary peer review program based on the issues they face [36]. This article goes further to mention that the peer review could be held at predetermined frequencies to discuss new patients considered for treatment, treatment planning or patients already on treatment.

4.2.4. FM #4: Incorrect Contouring

The fourth ranking failure mode, incorrect contouring, has an occurrence scoring of 3 which corresponds to only once a year, a very low risk. The severity scoring, however, suggests that should this failure mode go through it could result in significant dose variations of up to 20%. This is of more concern as it directly affects the patient's care whether by overexposure increasing toxicity or by underexposure failing to adequately control the disease. Drawing up incorrect contours for the patient's organs at risk would also lead to incorrect analysis, for example the GEC-ESTRO GYN [10] publication recommend reporting the 0.1cc, 0.2cc, 1cc, 2cc, etc. which could all be incorrect if the incorrect volumes were contoured. The detectability scoring of 8 makes it even riskier, more controls would need to be put in place to intercept this from going through.

4.2.4.1. FTA: FM #4

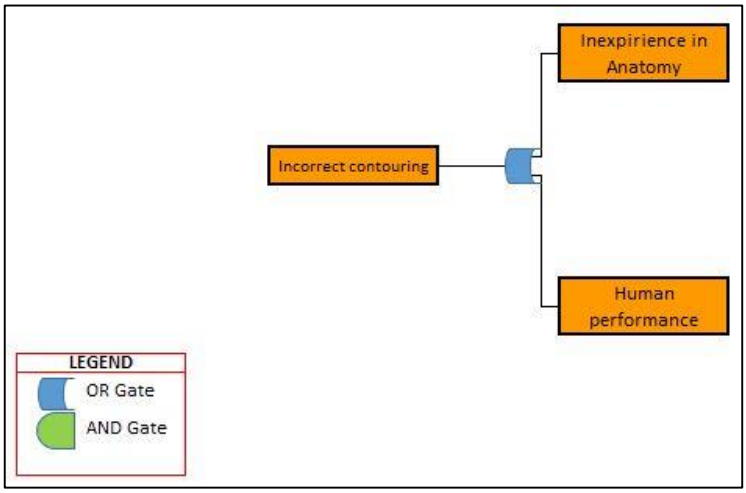

Figure 4.12. The fault tree analysis for incorrect contouring.

Incorrect contouring could mean that the volumes drawn for treatment are not consistent with the established protocols, or simply some parts of whether OAR or treatment volume has been left out or chopped off on certain CT slices. This would result in incorrect volumetric analysis, which in turn interprets into incorrect reporting. Figure 4.12 suggests that incorrect contouring could result from staff's inexperience in anatomy or human performance error. This needs a lot of attention from everyone involved in terms of image analysis to make sure what is being visualized is what it is, not just an artefact. Typically, an experienced RO should be the one to delineate all the treatment volumes on the CT scans, and other staff members could delineate OARs. Figure 4.13 recommends that staff training should be implemented on both the brachytherapy planning and simple human anatomy. It further recommends that a licence for automated contouring should be considered for purchasing to improve streamlined workflow and quality volumes. This feature is available as an extra from the Sagiplan used in the private clinic.

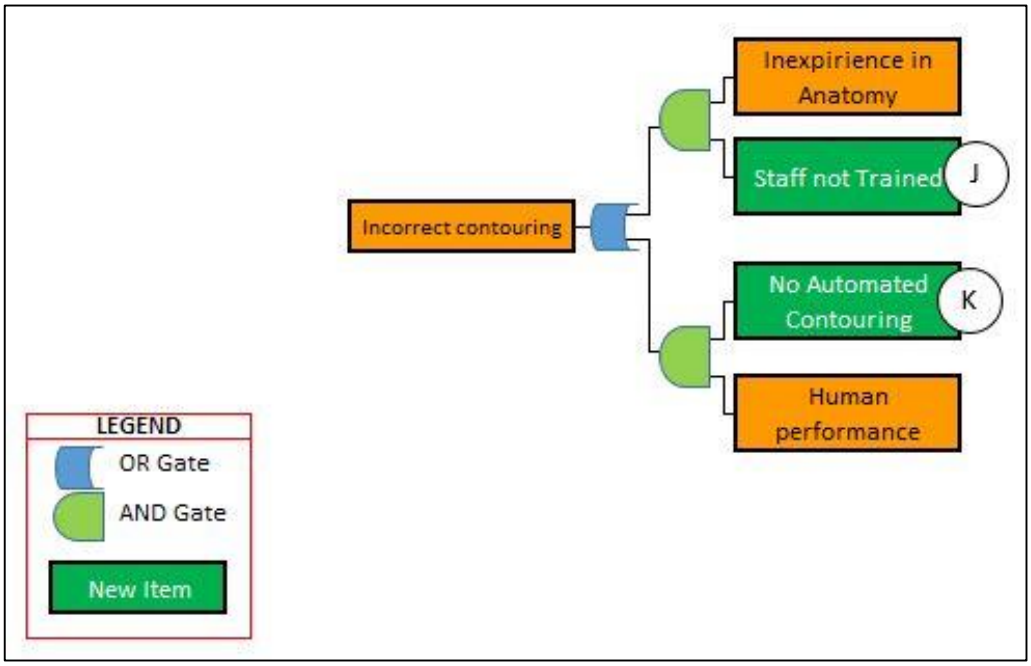

Figure 4.13. The fault tree analysis for incorrect contouring, with interventional actions or gate keepers.

4.2.5. FM #5: Incorrect Doses

Number 5 on the 20% ranking failure modes is incorrect prescription which is directly linked to potential high doses to the patient or under-dose leading to non-control of the tumour. With the occurrence scoring of 2 it could potentially happen once in several years, but the scoring for both S and D makes it a high risk and therefore deserves high prioritization. A severity scoring of 9 would translate to a near-fatal result should this failure mode propagate through. Another possibility could be typographical errors where a staff member would have failed to correctly enter the dose in the planning system or the RO having written an incorrect prescription in the sheet. This failure mode borders around a communication breakdown where the interface between professional groups is flawed.

4.2.5.1. FTA: FM #5

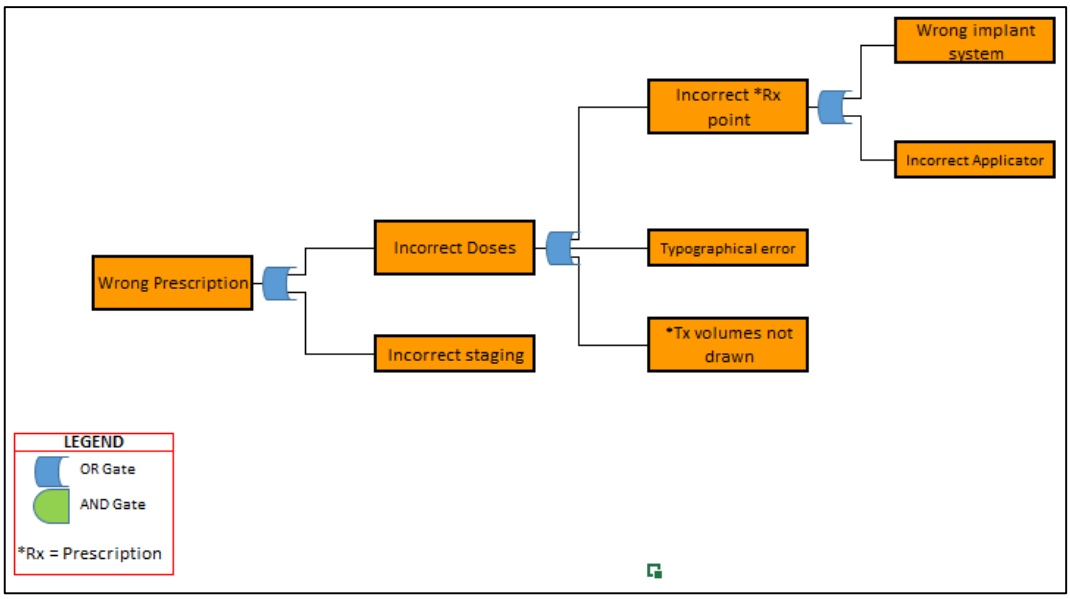

Figure 4.14. The fault tree analysis for incorrect doses.

Incorrect doses could be a result from typographical errors in prescription entry into the system or mis-interpreted verbal instruction, Figure 4.14. Typographical errors were found to potentially result from wrong entry into a treatment or prescription sheet or a typo into the TPS. It was also established that inadequate doses could result if the treatment volumes have not been drawn as this does not specify exactly what is being treated, and it could possibly under- or over-estimate doses. Figure 4.15 illustrates gatekeepers that have been implemented to prevent causes from propagating into the FM.

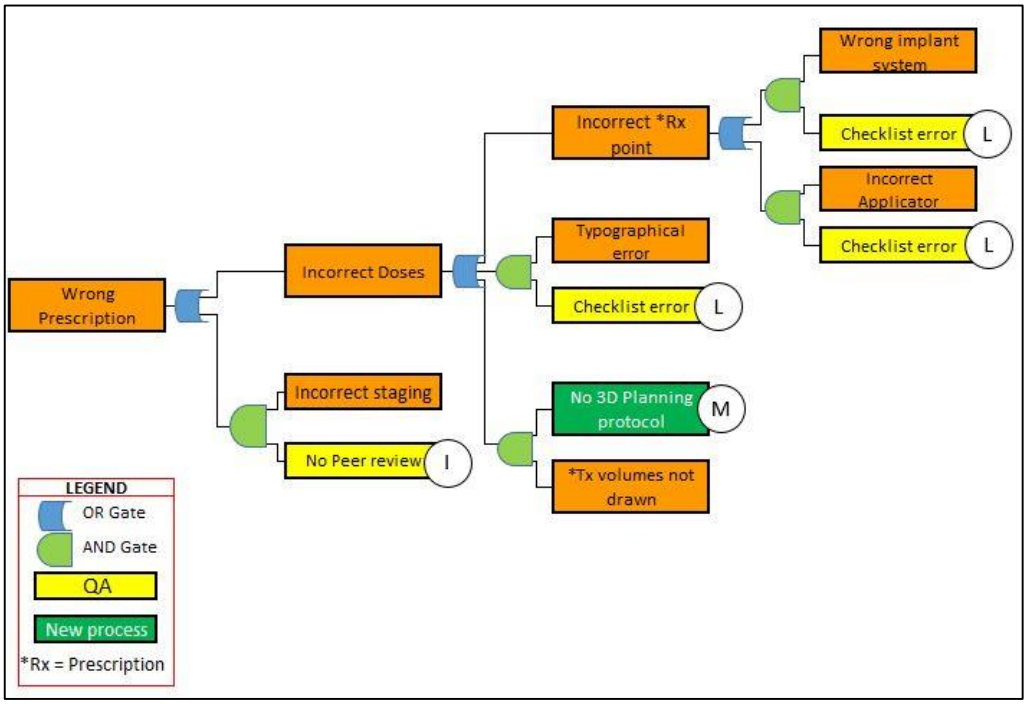

Figure 4.15. The fault tree analysis for incorrect doses, with interventional actions.

The gatekeepers are in the form of checklists as shown in the above figure. In all stages, the checklist refers to the treatment planning checklist which can be viewed in appendix A3.

4.3. Design of new QA Program

The QA program of this hospital consists of the tests that were deemed necessary based on the findings of this dissertation, and the newly modified process map or workflow, Figure 4.16. Interventions have been established to intercept all the potential causes of failure modes identified along each branch in all fault trees, and have been implemented on the current process map of the hospital. The next section also discusses the composite fault tree, which demonstrates how all the above-identified FMs could result in dose misadministration if not intercepted, see Figure 4.17(a, b)

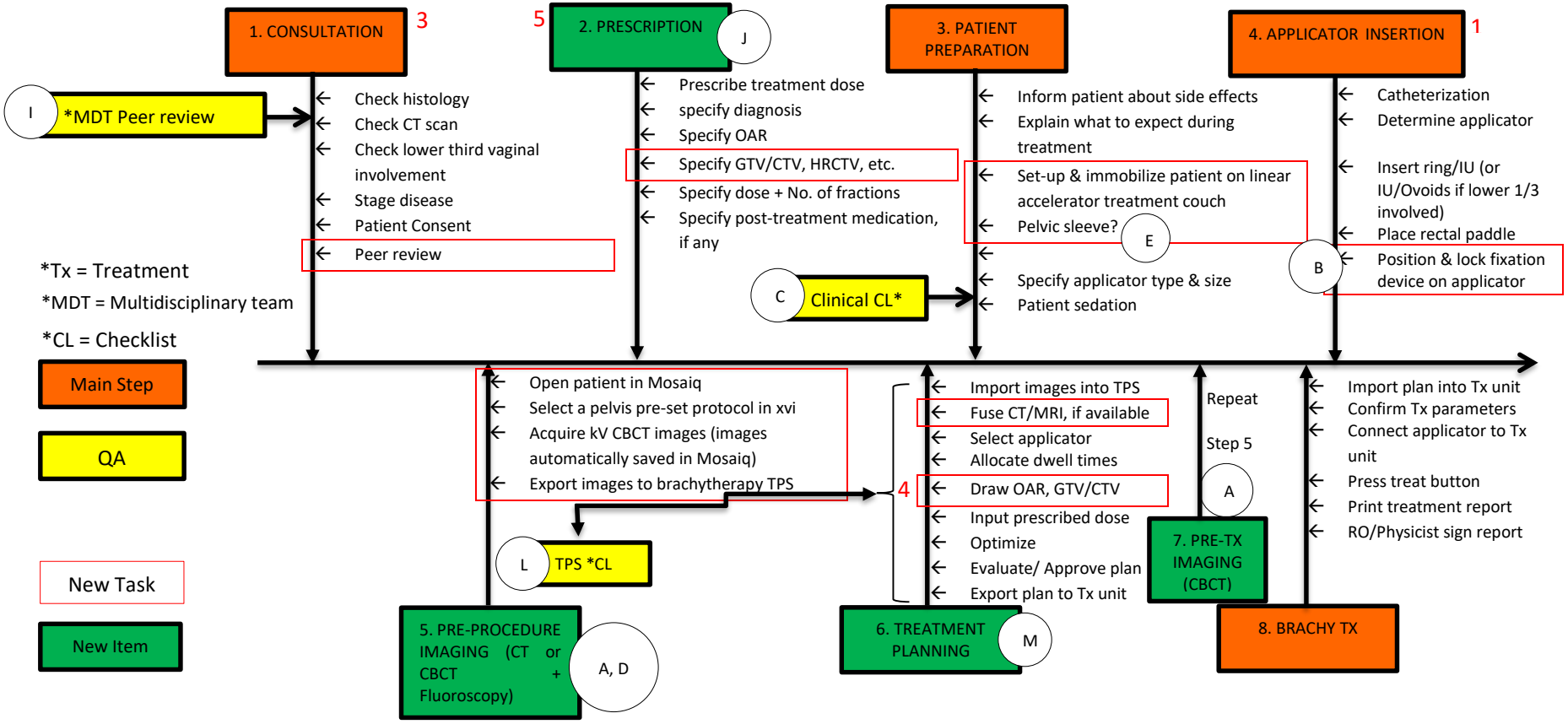

Figure 4.16. New brachytherapy process map for the selected private hospital, with interventional actions. Colour codes and asterisk have been explained in the legend. The red numerical represent FM ranking in the 20% highest RPN values.

The encircled capital letters in both the process map and fault tree with interventions, are summarised in chapter 5 as recommendations for the newly designed quality assurance program of the intracavitary gynaecological brachytherapy. Where applicable, details of recommendations are provided in the appendix. These recommendations were deemed necessary based on the findings of this dissertation, and the resources available in this hospital.

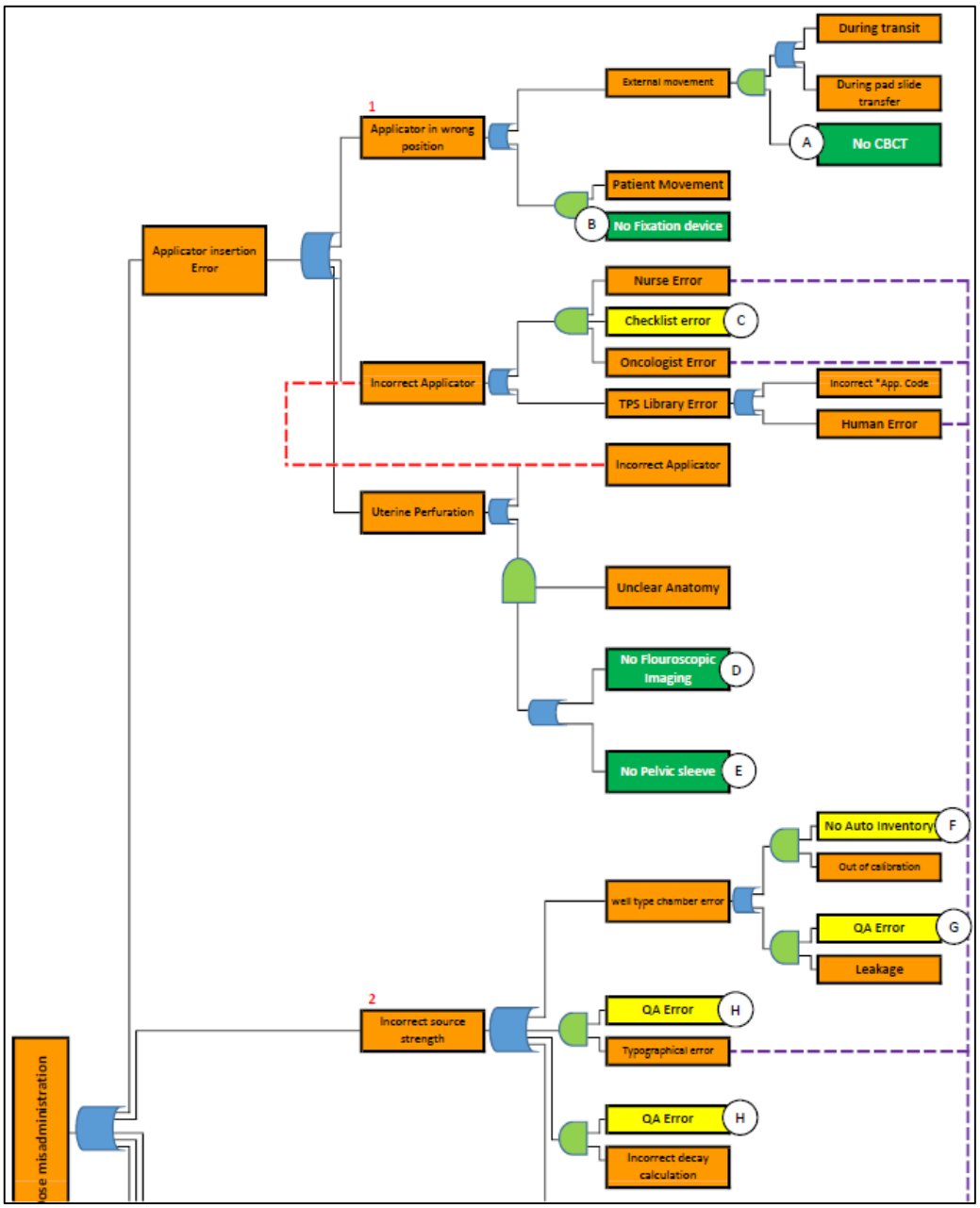

Figure 4.17(a). New brachytherapy process map for the selected private hospital, with interventional actions. Colour codes and asterisk have been explained in the legend. The red numerical represent FM ranking in the 20% highest RPN values

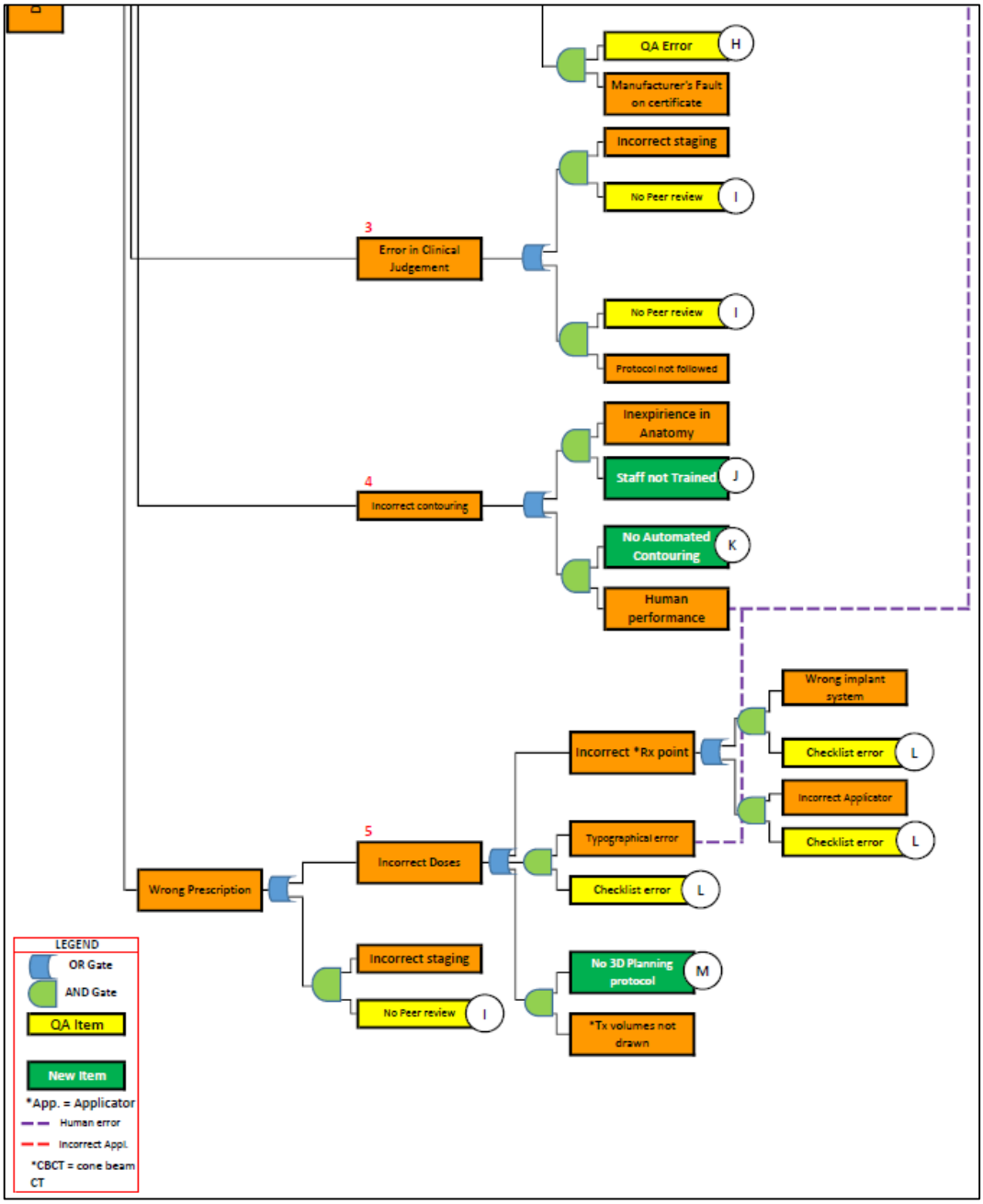

Figure 4.17(b). New brachytherapy process map for the selected private hospital, with interventional actions. This is an extension to Fig. 4.16(a) due to the size of the image not fitting in one page.

Chapter 5 Recommendations and Conclusions

5.1. Recommendations

Interventional actions indicated in both the new process map and composite fault tree are discussed below. Most of these interventions have resulted in change of clinical practice for the hospital, and constitute the main recommendations of this work:

A. CBCT procedure

The use of a CBCT for brachytherapy imaging and planning is implemented to identify applicator movement resulting from transportation of patient in between departments. Pre-treatment imaging with CBCT was also implemented in cases where a radiology CT is preferred depending on the case. Procedure on how the CBCT features in the workflow has been detailed in appendix A2.

B. Use of a fixation device

To hold an applicator in place during treatment and transportation when necessary, use of a fixation device has been implemented. Use of a fixation device has proven useful in reducing applicator movements during an HDR brachytherapy procedure [24].

C. Clinical checklist

To avoid omission of certain steps during the brachytherapy procedure, a checklist has been implemented to assure that surgical, applicator-specific and general patient care instruments and devices are present. An elaborate, but not exhaustive, checklist has been detailed in Appendix A3.

D. Use of a Fluoroscopic imaging device

Uterine perforation has been identified as one of the FMs at the applicator insertion stage. A use of fluoroscopic imaging is therefore recommended to help a radiation oncologist better visualize the anatomy in real-time. This could be

done in conjunction with the use of a pelvic sleeve for its clear visibility in an x-ray image.

E. Use of smit tube

A Smit tube is a disposable, silicone-based indwelling intrauterine tube that can be used to aid brachytherapy of the cervix for easier insertions [37]. This should mitigate a potential of uterine perforation that has been identified as one of the applicator-related FMs. The smit tube has further been identified to reduce and help quantify the movement of the cervix during both external beam and HDR treatments [33, 38]. The use of a Smit tube should be decided by the treating RO on a per-patient basis, considering a possible effect on doses to OARs [37].

F. Development of automated inventory

An interactive inventory was developed to prevent a potential use of instruments or equipment that are out of calibration. This inventory is excel-based and has been coded to send notifications at certain workbook triggers. A snippet of this inventory has been added to appendix A3.

G. Chamber stability check

It is recommended that a long-lived radioactive source be used to test the stability or response of the chamber. The procedure on how to carry out this test will not be discussed in this dissertation as this is a common test recommended by many international protocols, and is already part of the hospital's current QA program.

H. New source QA checklist

To avoid the risk of using incorrect formulae that could result in incorrect source strength measurements or calculations, a checklist has been developed to assure that all necessary checks have been performed, see appendix A3.

I. Implementation of peer review

It has been established from the results of this dissertation that a clinical misjudgement may result from causes that could be otherwise intercepted if a MDT peer review was part of the patient workup. Guidelines to establish MDTs has been added to appendix A2.

J. Staff training on anatomy and TPS

It has been established that incorrect contours may result from delineation by inexperienced staff in terms of basic anatomy of the pelvis. A recommendation was therefore made that each staff forming part of the brachytherapy planning should be taken through formal training in anatomy and the contouring part of the treatment planning system.

K. Acquisition of auto contouring licence

Due to unavoidable variations in OAR and tumour volume delineations between professionals [39, 40, 41], it is recommended that an auto-contouring licence be considered for acquisition to mitigate human error. The Sagiplan treatment planning system currently used in the hospital supports the automatic contouring feature [32].

L. TPS checklist

Multiple potential causes were identified that could result in FMs that relate to treatment planning, and a checklist was then developed to intercept those causes, details in appending A3. A possibility of automated checklists should also be explored like those implemented by Cai [42].

M. 3D Treatment Planning Protocol

A new treatment planning protocol has been implemented according to the findings of this research, based on GEC-STRO GYN group (I) and (II) [10, 11].

This ensures that all treatment volumes and OARs are delineated for thorough 3-dimensional evaluation and benefits, see appendix A2.

5.2. Limitations

As a standard recommendation, the next step after the first analysis of the potential failure modes and application of fault tree analysis would be to apply these methods again on the implemented QA program in order to assess their effectiveness. Given the time frames within which this study was conducted, however, this could not be exercised as the recommendations need be given practical period before their value could be measured. Another drawback of using FMEA is, depending on the method of scoring, its proneness to subjectivity based on the professional panel's view of what constitutes risk for a given process [43].

This work is limited to intracavitary gynaecological brachytherapy but same principle can be extended to other sites and techniques. Also given that gynaecological brachytherapy is the bulk of the case load which means this work covers most of the cases [44]. Another drawback in using FMEA for this research is that, even though over 20 failure modes were identified, only 5 were prioritized which doesn't mean lower-scored FMs won't occur.

One of the most weaknesses experienced during this research is that FMEA and FTA are very time consuming and demanded significant productive time from the participants. Most of the participants really put in the effort and their input proved invaluable to the outcomes of this work, while others simply could not and this was seen in a return response rate of about 80% of all questionnaires. This response rate, however, was statistically adequate compared to the rest of the sample. The AAPM TG 275 had a response rate of 33%, for a rather larger sample [45]. It would therefore, take some considerable amount of months (or years) to have all sections of a department analysed in detail, unless dedicated human resource is targeted to this.

Another observable drawback was the absence of other professionals in the selected cross-section, like representation from the nursing staff for example.

5.3. Strengths

When applied thoroughly, FMEA and FTA can be great tools to employ in the design of a quality assurance program or review of one [23]. As opposed to using the one size fits all approach in following traditional machine-specific QA, these methods are able to incorporate the tolerance and frequencies into the department-specific process considering resources available. One of the advantages of the prospective methods is that they do not need historic data to avoid future failures.

This is the first work on prospective risk analysis methods conducted in a private hospital in South Africa, and proves that this approach can be adopted in any radiotherapy setting with emphasis on the process at hand which allows for adequate weighting of resources relative to risk. FMEA and FTA include members from different craft groups/ disciplines and usually the most experienced members which is invaluable and makes for synergy within the team. The process builds a core team within the department which is interested in quality improvement, this is not trivial because often workers believe quality is for managers.

5.4. Future work

It is recommended that another round of FMEA be applied on this new QA program after a year to assess its effectiveness. These prospective risk analysis methods should also be applied in the brachytherapy departments of other private and public hospitals taking into consideration the availability of resources. This approach should also be extended to no-gynae procedures.

5.5. Conclusion

Prospective risk analysis methods were employed in this dissertation for the design of a brachytherapy QA program in a private hospital. A process map of this hospital was outlined and analysed using failure modes and effects analysis, after which fault tree analysis was performed on the highest 20% ranking failure modes. Treating with applicators in a wrong position and an incorrect source strength was found to be failures with the highest risk and potential consequence to the patient. It was found, through the FTA, that all the identified failures could result in dose misadministration to the patient which would compromise tumour control and increase toxicity to OARs.

Implementation of some QA tools were made, which constitutes change from the current practice in the clinic. A more process-driven, patient-centric QA program was established using the FMEA and FTA processes. There has been some convergence between the implementations of this work and conventional protocols like AAPM TG-40, 56 and 59 in terms of routine tests. Implementation of prospectively-designed QA tools like checklists promise a new paradigm shift towards quality and safety culture. These prospective risk-based methods have proven invaluable in the review and improvement of a quality management system and has offered a solid foundation for similar future projects.

References

1. Beeksma, B. Source tracking and quality assurance of high dose rate (HDR) brachytherapy, Master of Science – Research thesis, Center for Medical Radiation Physics, University of Wollongong, 2014. http://ro.uow.edu.au/theses/4048

2. Kutcher G. J., Chair T. G., Coia, L., et al. Report of AAPM Radiation Therapy Committee Task Group 40 Med. Phys. Vol. 21 no. 4, Apr 1994
3. Nath, R., Anderson L. L., Meli, J., A., et al. Code of practice for brachytherapy physics: Report of the AAPM Radiation Therapy Committee Task Group No. 56, Med. Phys. Vol. 24 no. 10, Oct 1997
4. Kubo, H. D., Glasgow, G. P., Pethel, T. D., et al. High dose-rate brachytherapy treatment delivery: Report of the AAPM Radiation Therapy Committee Task Group No. 59, Med. Phys. Vol. 25 no. 4, Apr 1998
5. Bidmead, M., Briot, E., Burger, J., et al. A practical guide to quality control of brachytherapy equipment, ESTRO Booklet No. 8. ESTRO, Mounierlaan 83/12 – 1200 Brussels, Belgium, 2004
6. Khan, F. M. The Physics of Radiation Therapy, 4th Edition, Lippincott Williams & Wilkins, 2010
7. Rivard, M. J., Coursey, B. M., DeWerd, L. A., et al. Update of AAPM Task Group No. 43 Report: A revised AAPM protocol for brachytherapy dose calculations, Med. Phys. Vol. 31 no. 3, Mar 2004
8. Thomadsen, B. R., Williamson, J. F., Rivard, M. J., et al. Anniversary Paper: Past and current issues, and trends in brachytherapy physics, Med. Phys. Vol. 35 no. 10, Oct 2008
9. Wyckoff, H. O., Allisy, A., Caswell, R. S., et al. ICRU Report 38: Dose and Volume Specification for Reporting Intracavitary Therapy in Gynecology, 1985
10. Haie-Meder, C, Potter, R, Van Limbergen, E, etal. Recommendations from gynaecological (GYN) GEC ESTRO working group (I): Concepts and terms in 3D image-based 3D treatment planning in cervix cancer

brachytherapy with emphasis on MRI assessment of GTV and CTV, ESTRO, 2005

11. Potter, R., Haie-Mederb, C., Van Limbergenc, E., et al. Recommendations from gynaecological (GYN) GEC ESTRO working group (II): Concepts and terms in 3D image-based treatment planning in cervix cancer brachytherapy—3D dose volume parameters and aspects of 3D image-based anatomy, radiation physics, radiobiology, ESTRO, 2006
12. Landberg, T., Chavaudra, J., Dobbs, J., et al. ICRU Report 50: Prescribing, Recording and Reporting Photon Beam Therapy, 1993
13. Landberg, T., Chavaudra, J., Dobbs, J., et al. ICRU Report 62: Prescribing, Recording and Reporting Photon Beam Therapy (supplement to ICRU report 50), 1999
14. Potter, R., Kirisits, C., Erickson, B., et al. ICRU Report No. 89: Prescribing, Recording, and Reporting brachytherapy for Cancer of the cervix, GEC-ESTRO, Jun 2016
15. The Canadian organization of medical physicists and the Canadian college of Physicists in medicine. Standards for Quality Control at Canadian Radiation Treatment Centres, Brachytherapy remote afterloaders, 2006
16. Rath F. Tools for developing a quality management program: Proactive tools (process mapping, value stream mapping, fault tree analysis, and failure mode and effects analysis). Int J Radiat Oncol Biol Phys. Vol. 71 No. 1, 2008
17. Thomadsen, B., Dunscombe, P., Ford, E. Quality and safety in radiotherapy: Learning the new approaches in task group 100 and beyond. Medical Physics monograph No. 36, 2013
18. Huq, M. S. Introduction to risk assessment and process mapping, [PowerPoint slides]. Retrieved from hand-outs obtained during the national training workshop held in 2013 in Cape Town, South Africa
19. White paper issued by: Siemens PLM Software. How to conduct a failure modes and effects analysis (FMEA). Retrieved from https://polarion.plm.automation.siemens.com/hubfs/Docs/Guides_and_Manual

s/Siemens-PLM-Polarion-How-to-conduct-a-failure-modes-and-effects-analysis-FMEA-wp-60071-A3.pdf , 2016

20. Huq, M. S., Fraass, B. A., Dunscombe, P. B., et al. The report of Task Group 100 of the AAPM: Application of risk analysis methods to radiation therapy quality management, Med. Phys. Vol. 43 No. 7, Jul 2016, pp 4217
21. Sawant, A., Dieterich, S. Failure mode and effect analysis-based quality assurance for dynamic MLC tracking systems. Med. Phys. Vol. 37 No. 12, Dec 2010
22. Wilkinson, D. A., Kolar, M. D. Failure modes and effects analysis applied to high-dose rate brachytherapy treatment planning. Brachytherapy, 2013
23. Ford, E. C., Gaudette, R., Myers, L. Evaluation of safety in a radiation oncology setting using failure mode and effects analysis. Int J Radiat Oncol Biol Phys. Vol. 74 No. 3, 2009
24. Mayadev, J., Dieterich, S, Harse, R., et al. A failure modes and effects analysis study for gynecologic high-dose-rate brachytherapy. Brachytherapy, 2015
25. Ibanez-Rosello, B., Bautista-Ballesteros, J. A., Bonaque. Failure Modes and effects analysis of skin electronic brachytherapy using Esteya unit. Journal of Contemporary Brachytherapy, vol. 8 No. 6, 2016
26. Poder, J., Brown, R., Howie, A. A risk-based approach to development of ultrasound-based high-dose-rate prostate brachytherapy quality management. Brachytherapy, 2018
27. Huq, M. S., Fraass, B. A, Dunscombe, P. B., et al. A method for evaluating quality assurance needs in radiation therapy. Int. J. Radiation Oncology Biol. Phys. Vol. 71 No. 1, 2008

28. Ekaette, E., Lee, C. R., Cooke, D. L. Probabilistic Fault Tree Analysis of a Radiation Treatment System. Risk Analysis, Vol. 27 No. 6, 2007
29. Dunscombe, P. B. Fault Tree Analysis [Powerpoint slides] delivered at the AAPM Spring Clinical Meeting 8th March 2015.
30. Santosa, H. B. Modified Fault Tree Method for Vulnerability Analysis of Nuclear Medicine Facility Security System Case study: Radiotherapy Facility, Sardjito General Hospital. International Journal of Nuclear Security Vol. 2 No. 2, 2016
31. Saginova Service manual. Eckert & Ziegler BEBIG GmbH, TD23_006/ Rev. 02/ 06.2016
32. SagiPlan 2.0 User's guide, Eckert & Ziegler BEBIG GmbH, TD25_020 / Rev. 01/06/2016
33. Wadi-Ramahi, s., Alnajjar, W., Mahmood, R., et al. Failure modes and effects analysis in image-guided high-dose-rate brachytherapy: Quality control optimization to reduce errors in treatment volume
34. Thomadsen, R. Electronic intracavitary brachytherapy quality management based on risk analysis: The report of AAPM TG 182
35. Huynh-Le, M, Simon, A, Hoopes, D et al. Implementation of peer review quality rounds for gynaecologic brachytherapy in a high-volume academic centre. Brachytherapy, 2020
36. Marks, L, Adams, R, Pawlicki, T et al. Enhancing the role of case-oriented peer review to improve quality and safety in radiation oncology: Executive summary. Practical Radiation Oncology, 2013
37. Mehta, S., Farnia, B., De la Zerda, A. et al. Dosimetric effects of the Smit sleeve on high-doserate brachytherapy tandem and ovoids plans for patients with locally advanced cervical cancer. Journal of Contemporary Brachytherapy, Vol. 11 No. 6, 2019
38. Lee CM, Shrieve DC, Gaffney DK. Rapid involution and mobility of carcinoma of the cervix. Int J Radiat Oncol Biol Phys., 2004

39. Eminowicz, G., Rompokos, V., Stacey, C., et al. The dosimetric impact of target volume delineation variation for cervical cancer radiotherapy. Radiotherapy and Oncology, Vol. 120 issue 3, 2016
40. Viswanathan A., Erickson B., Gaffney D., et al. Comparison and consensus guidelines for delineation of clinical target volume for CT and MR-based brachytherapy in locally advanced cervical cancer. Int J Radiat Oncol Biol Phys, 2014
41. Weiss E., Richter S., Krauss T. et al., Conformal radiotherapy planning of cervix carcinoma: differences in the delineation of the clinical target volume. A comparison between gynaecologic and radiation oncologists. Radiother Oncol, 2003
42. Chang, A, Tan, L, Duke, S et al. Challenges for Quality Assurance of Target volume Delineation in Clinical Trials. Front. Oncol, 2017
43. Bin Cai. Automated and standardized HDR Brachytherapy Treatment Plan QA via API scripting [PowerPoint slides]. Department of Radiation Oncology Division of Medical Physics, Western University School of Medicine. Retrieved from http://amos3.aapm.org/abstracts/pdf/144-42014-475604-143028-1849663742.pdf
44. Thomadsen, B., Biggs, P., Cardarelli. G. et al. Electronic intracavitary brachytherapy quality management based on risk analysis: The report of AAPM TG 182. Medical Physics, 2020
45. Ford, E., Conroy, L., Dong, L. et al. Strategies for Effective Physics Plan and Chart Review in Radiation Therapy: Report of AAPM Task Group 275
46. Technical Quality Control Guidelines for Brachytherapy Remote Afterloaders. Canadian Partnership for Quality Radiotherapy, 2015
47. Soukup, T, Lamb, BW, Arora, S, et al. Successful strategies in implementing a multidisciplinary team working in the care of patients with cancer: an overview and synthesis of the available literature. Journal of Multidisciplinary Healthcare, 2018

Appendix A: The Quality assurance program

A1. Routine QA

Daily QA

The following tests were implemented for daily QC at this private hospital, and are deemed sufficient [46]. Certain tests listed in Table 2.2 of this dissertation weren't included here, some because they don't add any value while others are more applicable to individual patients.

Test	Performance	
	Tolerance	Action
Treatment interrupt	Functional	
Console displays (treatment status indicator) and emergency key switch	Functional	
Date, time, and source strength in treatment unit	Accurate	
Source (and dummy) positional accuracy	1mm	2mm
Dwell time accuracy	1%	2%

Annual QA

Test	Performance	
	Tolerance	Action
Hand crank operation	Functional	
Leakage radiation	Baseline	
Multi-channel indexer function	Functional	
Dwell time accuracy	1%	2%
Timer linearity	1%	2%
Transit time/transit dose reproducibility	Baseline	
Dosimetric length of applicators and guide tubes	1mm	2mm
Applicators and templates dimensions	Baseline	
Shield integrity of shielded applicators	Baseline	
X ray marker positional accuracy	1mm	2mm
Review emergency response procedures	Complete	
Independent quality control review	Complete	

A2. Newly implemented procedures and protocols

CBCT procedure

To acquire CBCT images, a patient needs to first be registered into Mosaiq, which is the (electronic medical records) EMR system in this instance. MR images, if available, may be used as reference image set for co-registration with cone beam ones. The following procedure should be followed during image acquisition, assuming applicator insertion has already taken place and patient is on the treatment couch:

- Open patient in Mosaiq (this information will load into the XVI application)
- Press the green kV button on the FKP to start imaging
- In Mosaiq, go to images and select those acquired on the day
- Click on export and select applicable DICOM export filter, click OK to export

3D Treatment planning protocol

For every patient due to undergo brachytherapy, the following should be specified with clarity [10]:

- Prescription dose (eg: 7 Gy in 3 fractions once a week)
- Specify dimensions of the GTV (height and width)
- Specify imaging modality (eg: CBCT at 5mm slice thickness, scan from umbilicus to mid femur, fused with MRI)
- Specify which target volumes and critical structures to contour (eg: GTV, CTV, HR CTV, bladder, sigmoid, etc.)
- Delineate target volumes and critical structures, on all appropriate slices, according to prescription specification

MDT Peer review protocol

Multidisciplinary team (MDT) discussions are key in cancer management of patients [47], and need be established systematically for its full benefits to be realized. The following should be considered for the establishment or improvement of the MDT for peer reviewed patient care planning, and should include all the brachytherapy team members (nurse, physicist, radiation oncologist, gynaecologist, radiation therapist, etc.):

- The MDT meetings should preferably have a chair to facilitate sessions
- Should be held on regular basis appropriate to patient volumes seen at the clinic
- Nurses should be included in all sessions as their contribution has proven invaluable [47]
- Patients' views should be factored into decision-making during the MDT meetings.
- A complete patient profile should be presented including biomedical aspects of the disease, comorbidities, psychosocial aspects and their views on treatment options.
- The MTDs should encourage personal development and training
- pathological, radiological, comorbidities, psychosocial, palliative care needs, patient history, and patient views should be considered altogether when making care decisions
- The external beam, chemo treatment and surgery history should be considered as contributory factors to the decision-making
- The decisions and/or recommendations should be evidence based and in line with standard treatment protocols adopted by the clinic

A3. Checklists and Inventories

TPS Checklist

- [ ] Check that patient details match up with image set details (Name, ID number, etc.)
- [ ] Checked that correct slice thickness was used
- [ ] Checked that prescription dose in TPS matches up with that in prescription sheet
- [ ] Checked that target volumes have been correctly delineated (GTV, CTV, etc.)
- [ ] Checked that OAR volumes have been correctly delineated (bladder, sigmoid, rectum)
- [ ] Checked that correct applicator has been selected (check for correct code, size, etc.)
- [ ] Checked that applicator is in correct orientation relative to cartesian axes (rotated and locked)
- [ ] Checked that source strength is correct as per decay table
- [ ] Checked that unscaled dwell time in treatment unit matches up with TPS dwell times
- [ ] Checked that dose to OAR is within tolerance (D0.1cc, D0.2cc, D1cc, D2cc, etc.)

Clinical/Theatre instrument Checklist

- [ ] Checked that GA was administered or patient sedated
- [ ] Checked that enough gauss is available
- [ ] Checked that speculum is present
- [ ] Checked that correct applicator was chosen and handed to RO
- [ ] Checked that kidney dish is available
- [ ] Checked that clamps are available
- [ ] Checked that a sterilizing/disinfecting solution is available (e.g. savlon)
- [ ] Checked that K-Y gel is available
- [ ] Checked that catheters are available

New source Checklist

- [ ] Checked for potential typographical errors in new data entry on calculation spreadsheet
- [ ] Checked that all formulae are correct, including source decay (lock cells if necessary)
- [ ] Checked that source strength was correctly entered into treatment unit console
- [ ] Checked that source strength was correctly entered into treatment planning system
- [ ] Checked that measured source strength is within 5% of that on certificate

Automatic equipment inventory

The following is a screenshot of an automated inventory running on excel. The red colour indicates a calibration date that's overdue and the green means the calibration is still valid. The workbook that contains this sheet should also incorporate any other QC spreadsheet so that whenever it is opened, it sends the message to the selected email address as shown in the VBA code below.

EQUIPMENT INVENTORY

Equipment Name	Manufacturer	Model No.	Serial No.	Last Cal. Date	Cal. Due
Well-type chamber Sample	MAN 1	WTC-1	SN000123	01-11-2018	21-10-2020
Brachy Electrometer	MAN 2	BTE-1	SN000246	05-06-2018	25-05-2020
Farmer-type chamber	MAN 3	FTC-1	SN000369	05-04-2018	25-03-2020

TODAY: 04-06-2020

```
Private Sub Workbook_Open()

Dim CDO_Mail As Object
Dim CDO_Config As Object
Dim SMTP_Config As Variant
Dim strSubject As String
Dim strFrom As String
Dim strTo As String
Dim strBody As String

    strSubject = "Calibration Reminder: Expiry Date"
    strFrom = "brachytherapy@privatehospital.com"
    strTo = "brachytherapy@privatehospital.com"
    strBody = "Calibration to this equipment expires on: " & Str(Sheet3.Cells(5, 7))
```

Appendix B: Questionnaires

B1. Process Map Questionnaire

According to your experience at this hospital, please outline a brachytherapy workflow from consultation through to treatment by filling in the boxes according to the order indicated by numbers. Use the following diagram as a start.

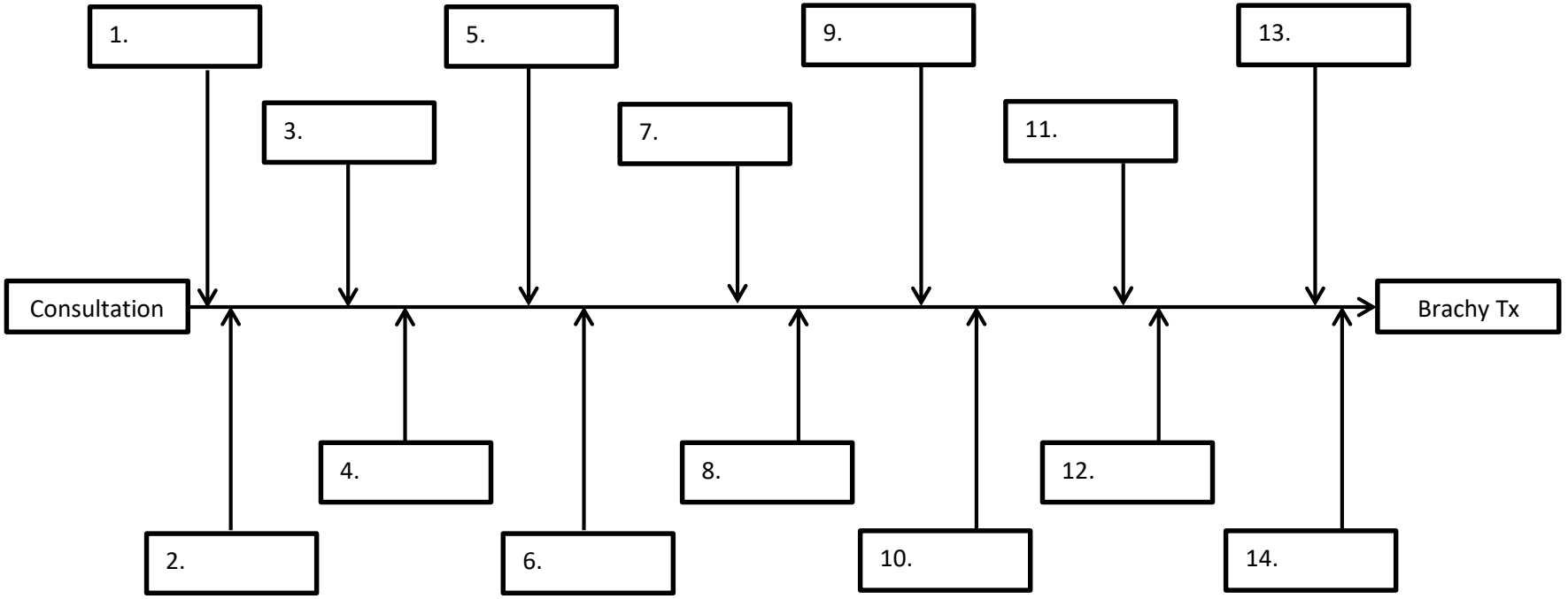

B2. FMEA Questionnaire

Based on the standard brachytherapy process map, fill in the following table according to the column headings as indicated. Please try to be as precise in your descriptions as possible while using short sentences. The completion of this spreadsheet assumes your understanding of FMEA from the workshop you attended and participated in.

	1	2	3	4	5
Fault mode					
Severity	Select appropriate severity	Select appropriate severity	Select appropriate severity	Select appropriate severity	Select appropriate severity
Occurrence	Select appropriate occurrence	lect appropriate occurrenc	Select appropriate occurrence	Select appropriate occurrence	Select appropriate occurrence
Detectability	Less than every 5 years Every 2-5 years Once a year Several times a year Once a month Several times a month Once a week	lect appropriate detectabi	Select appropriate detectabili	Select appropriate detectabili	Select appropriate detectability
O		N/A	N/A	N/A	N/A
D		N/A	N/A	N/A	N/A
S		N/A	N/A	N/A	N/A
RPN	#VALUE!	#VALUE!	#VALUE!	#VALUE!	#VALUE!

	6	7	8	9	10
Fault mode					
Severity	Select appropriate severity	Select appropriate severity	Select appropriate severity	Select appropriate severity	Select appropriate severity
Occurrence	Select appropriate occurrence	Select appropriate occurrenc	Select appropriate occurrence	Select appropriate occurrence	Select appropriate occurrence
Detectability	Select appropriate detectability	Select appropriate detectabi	Select appropriate detectabili	Select appropriate detectabili	Select appropriate detectability
O	N/A	N/A	N/A	N/A	N/A
D	N/A	N/A	N/A	N/A	N/A
S	N/A	N/A	N/A	N/A	N/A
RPN	#VALUE!	#VALUE!	#VALUE!	#VALUE!	#VALUE!

B3. FTA Questionnaire

Based on the RPN values in the FMEA questionnaire, draw up a fault tree for each of the failure modes on the space provided below. Start from the indicated point working towards the right of the page.

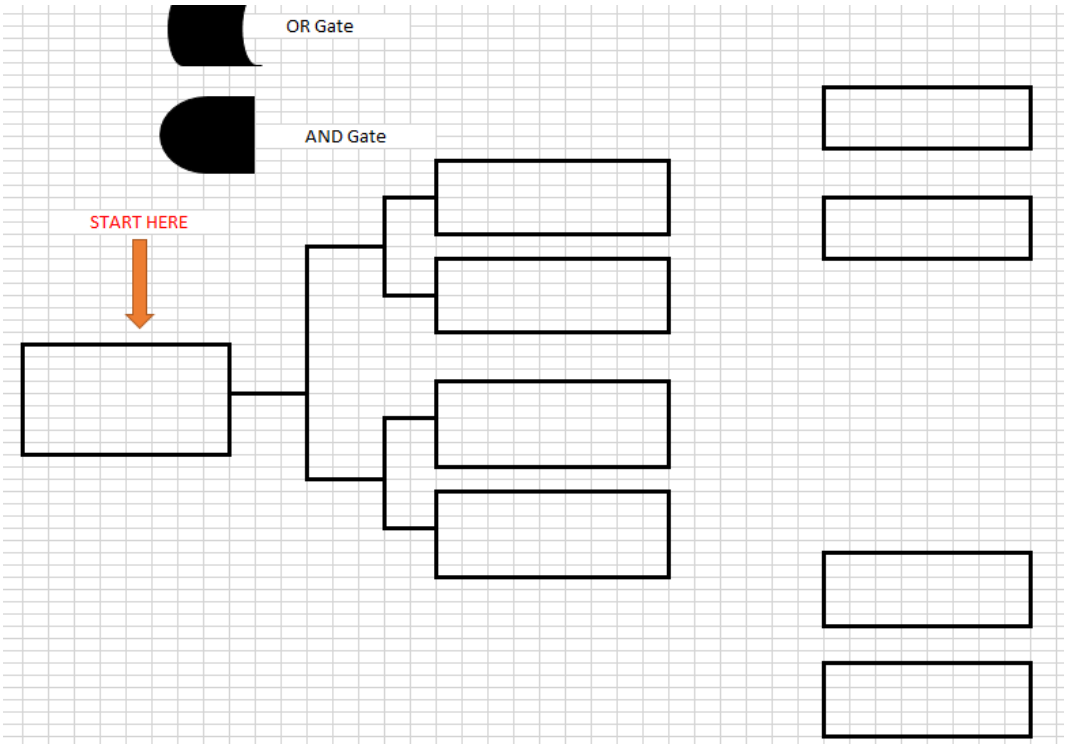

Appendix C: FMEA Results

FM #	Step	Step description	Potential failure modes	Potential Causes of failure	Potential effects of failure	Avg. O	Avg. S	Avg. D	Avg. RPN
1	Applicator insertion	The applicator is placed inside a patient for source transportation & dose distribution.	Applicator in wrong position	Patient movement, moving in between departments	Incorrect dose, Over or under dosage	3	8	9	216
2	Source Exchange	Calibration of the new radioactive source after delivery, before treatment	Source strength incorrect	Incorrect source decay, well-type chamber error, Typographical errors, Manufacturer's error on certificate	All affected patients overdosed or under dosed.	8	6	4	192
3	Consultation	The first appointment of the patient with the Radiation Oncologist.	Incorrect examination	Inattention by the referring Physician or Oncologist.	Incorrect disease staging which could result in wrong prescription, wrong dose	9	5	4	180
4	Treatment Planning	Delineation of organs at risk on the CT dataset.	Incorrect Contouring	Physician inattention, unfamiliarity with planning system, lack of anatomical atlas, inadequate imaging platform	Disease recurrence, Excessive toxicity to innocent bystander organs. Dose over-estimation	3	7	8	168
5	Prescription	Specification of dose by the RO to a desired point/volume	Incorrect doses	Typographical errors on prescription sheet or TPS entry, inattention by staff.	Wrong dose, biologically insufficient or excessive prescription	2	9	8	144

FM #	Step	Step description	Potential failure modes	Potential Causes of failure	Potential effects of failure	Avg. O	Avg. S	Avg. D	Avg. RPN
6	Applicator insertion	The applicator is placed inside a patient for source transportation & dose distribution.	Incorrect applicator	Oncologist error, nurse error, TPS library error, invisible applicator code	Incorrect dose, Over or under dosage, incorrect isodose distribution	4	8	3	96
7	Applicator insertion	The applicator is placed inside a patient for source transportation & dose distribution.	Uterine perforation	Inadequate application, unclear anatomy	Compromised general state of patient.	4	8	3	96
8	Patient preparation	The patient is taken through what to expect during their brachytherapy process.	Bowel Preparation	Miscommunication between nurse and patient.	Incorrect isodose distribution	8	3	4	96
9	Treatment	Initiation of Brachytherapy treatment after plan has been transferred from planning to the unit.	catheter length error	Kinks or blockage.	incorrect isodose distribution	2	9	5	90
10	Treatment	Initiation of Brachytherapy treatment after plan has been transferred from planning to the unit.	Wrong transfer tube	Human error, invisible numerical or colour codes.	Delay in treatment	3	9	3	81

FM #	Step	Step description	Potential failure modes	Potential Causes of failure	Potential effects of failure	Avg. O	Avg. S	Avg. D	Avg. RPN
11	Treatment Planning	Design of brachytherapy plan based on the RO's prescription.	Wrong dose prescription Point	Incorrect implant system	Incorrect isodose distribution, Incorrect dose, Over or under dosage	3	8	3	72
12	Applicator insertion	The applicator is placed inside a patient for source transportation & dose distribution.	Incorrect app documented	Human error	Inaccurate medical history.	1	9	6	54
13	Treatment Planning	Design of brachytherapy plan based on the RO's prescription.	Incorrect dwell position	Daily QA failure	Incorrect isodose distribution, dose misadministration	1	8	6	48
14	Treatment Planning	Design of brachytherapy plan based on the RO's prescription.	Failure to re-normalize	Human error	Incorrect isodose distribution, dose misadministration	3	8	2	48
15	Pre-procedure Imaging	Acquisition of CT dataset for organ visualization and treatment planning.	Wrong image set	Human error, inappropriate scan slice.	Substandard treatment plan.	1	8	5	40

FM #	Step	Step description	Potential failure modes	Potential Causes of failure	Potential effects of failure	Avg. O	Avg. S	Avg. D	Avg. RPN
16	Treatment Planning	Design of brachytherapy plan based on the RO's prescription.	DICOM failure	Network issues	Delayed treatment, partial treatment.	6	1	6	36
17	Treatment Planning	Design of brachytherapy plan based on the RO's prescription.	dose limit exceeded	Human error	Incorrect isodose distribution, dose misadministration	4	8	1	32
18	Treatment Planning	Design of brachytherapy plan based on the RO's prescription.	No CBCT	CT Not available	Untreated patient, delays	4	3	2	24
19	Pre-procedure Imaging	Acquisition of CT dataset for organ visualization and treatment planning.	Incomplete scan	Hardware failure	Inadequate dose delivery	3	3	2	18
20	Treatment	Specification of dose by the RO to a desired point/volume	source stuck	Hardware failure	Unnecessary radiation exposure to staff and patient.	1	8	2	16
21	Pre-procedure Imaging	Acquisition of CT dataset for organ visualization and treatment planning.	Artefacts	Use of contrast, presence of metallic material inside patient (prosthesis)	Incorrect contouring, inadequate dose to tumour	4	2	2	16
22	Treatment planning (data transfer)	Transfer of treatment parameters from the planning system to the treatment unit.	Network down	Broken network link, change in IP address.	Untreated patient, delay	4	1	4	16

Appendix D: Ethics Clearance

Research Office

HUMAN RESEARCH ETHICS COMMITTEE (NON-MEDICAL)
R14/49 Boroto

CLEARANCE CERTIFICATE	**PROTOCOL NUMBER: H19/02/04**
PROJECT TITLE	Quality management in Brachytherapy: A risk-base approach
INVESTIGATOR(S)	Mr M Boroto
SCHOOL/DEPARTMENT	School of Physics/
DATE CONSIDERED	15 February 2019
DECISION OF THE COMMITTEE	Approved
EXPIRY DATE	03 April 2022

DATE 04 April 2019 **CHAIRPERSON** (Professor J Knight)

cc: Supervisor : Dr I Usman

DECLARATION OF INVESTIGATOR(S)

To be completed in duplicate and **ONE COPY** returned to the Secretary at Room 10004, 10th Floor, Senate House, University. Unreported changes to the application may invalidate the clearance given by the HREC (Non-Medical)

I/We fully understand the conditions under which I am/we are authorized to carry out the abovementioned research and I/we guarantee to ensure compliance with these conditions. Should any departure to be contemplated from the research procedure as approved I/we undertake to resubmit the protocol to the Committee. **I agree to completion of a yearly progress report.**

Signature Date 05 / 04 / 2019