ON ASPECTS RELATING TO A HYDROCHLORINATION FACILITY FOR THE PROCESSING OF REFINERY PRECIOUS METAL RESIDUE MATERIALS

NOEL ALWIN FORTMANN

A project report submitted to the Faculty of Engineering, University of the Witwatersrand, Johannesburg in partial fulfilment of the requirements for the Degree of Master of Science in Engineering.

Johannesburg, 1990.

DECLARATION

I declare that this project report is my own, unaided work. It is being submitted for the Degree of Master of Science in Engineering in the University of the Witwatersrand, Johannesburg. It has not been submitted before for any degree or examination in any other University.

NOEL ALWIN FORTMANN

09 day of JULY 1990

ABSTRACT

A hydrochlorination facility was developed for the processing of refinery precious metal residue materials on the laboratory and pilot scale. Hazard elements were identified and evaluated using an Event Tree Analysis. An exponential technique was applied to estimate the cost of the proposed production hydrochlorination facility. The estimated cost was R120 000. The Expected Present Value Ratio was +190 which indicated satisfactory project economics.

The reactor material for the pilot scale unit was selected using a weighted values quantitative material selection procedure. Stainless steel Type 316L and Type 310 were selected. Failure of the Type 316L reactor occurred after 40 hours service. The mode of failure was extensive surface scaling which was attributed to the hydrogen chloride, sulphide gases and 1 000 ^{o}C operating environment.

Subject to certain provisions it would be feasible to commission a safe and profitable production hydrochlorination facility. The consumable reactor concept was based on its replacement after 40 hours service. This was justifiable because of the high value of the material and the saving in down-stream processing costs.

ACKNOWLEDGEMENTS

The author wishes to acknowledge Johannesburg Consolidated Investment Company, Limited for financial assistance and permission to present this project report for the Master of Science in Engineering degree.

CONTENTS | Page

LIST OF FIGURES

LIST OF TABLES

1. INTRODUCTION

1.1. Background

Arising out of a precious metal refining process con-conducted by a Johannesburg Consolidated Investment Company Limited group company are various residues. These residues occur at several stages of the refining process with each one being substantially different in terms of chemical and physical properties. The importance of these residues lies in their valuable metals content. This can vary in a wide region.

It is not feasible to continually return these residues to the refinery circuit as this will eventually lead to process stream dilution and excessively large quantities to be treated.

On the basis of some preliminary investigational work carried out by Johnson Matthey Research Laboratories in England it was decided to pursue the feasibility of a hydrochlorination process to further treat these residues. This process has a great potential in the processing of concentrate feed material whereby unwanted base metals can be removed at the beginning of the refining process thus reducing the quantities of internal residues produced.

/2.....

Chapter 2 of this project report will review literature of some important operational aspects to such a hydrochlorination facility as safety, maintenance, cost estimation, and materials selection. Chapter 3 details the experimental work conducted, chapter 4 the results and discussion, while the conclusions and recommendations are given in chapter 5.

1.2. Aim

The project had as its aim, the development of a hydrochlorination roasting facility to upgrade internal process residues to levels where they could be returned to the refinery. This would include tests to characterize the most important residues, determination of the optimal operating conditions and construction of the plant. A successful pilot plant was necessary before a prototype unit could be commissioned at the precious metals refinery and to this end, upscaling tests were carried out at the group laboratories - Minerals Processing Research Laboratories in Germiston.

1.3. Scope and Limitations

Due to the complexities involved in constructing a reactor to accommodate high temperatures and hydrogen chloride and sulphide gaseous environments, a batch type reactor was envisaged. Although future scope does exist for the design of a continuously fed plant. The engineering design should be simple, yet resistant to hydrogen chloride at up to 1 000 ^{o}C for extended periods. Good contact is required between reactive gas and feed. Precious metal losses must be minimised with zero losses being the desired goal. The safe operation of the plant by unskilled labour and local plant conditions are important limitations.

The reactor is expected to handle all the residues identified as being economically attractive. The reactions are gas-solid with all the residue materials being dry powders.

The major identifiable limitation to the process was the availability of a suitable reactor material. The combined effect of high operating temperatures and aggressive environment, reduced the choice to exotic materials, ceramics, and temperature resistant stainless steels. Severe manufacturing problems as well as poor operating performances were encountered with the ceramic materials. The stainless steel material performed adequately, but its service life was drastically reduced due to severe surface scaling. Eventually this lead to the failure of the reactor.

The project involved investigating the safety design aspects of such a facility with special regard to the toxicity of the gases involved. The possibilities of production losses and personal injury were also investigated.

The overall viability of the project rests on its profitability. Capital costs are estimated using upscale methods. Very careful estimations are made since no comparable facility exists from which inferences and interpolations could be made.

2. LITERATURE REVIEW

The application of the hydrochlorination technique to the metal refining industry was first attempted by Johnson Matthey Research Centre in England (24, 25). However, no further published literature is available. A review of the literature of some aspects required in the design of a hydrochlorination facility are given in this chapter.

2.1. Hazard Evaluation

2.1.1. Introduction

This section describes a selection of hazard evaluation procedures for identifying and evaluating process hazards. Process safety and loss control are important aspects of an industrial plant.

Hazard identification requires very careful consideration to analyse matters as they are and to conceive of how they might be. Hazard evaluation procedures have been developed to identify the hazards that exist, the consequences that might occur as a result of the hazards, the likelihood that events might take place that would cause an accident with such a consequence, and the likelihood that safety systems, mitigating

systems, emergency alarms and evaluation plans would function properly. This would eliminate or reduce the dangerous consequences.

Many procedures can be used to provide either quantitative or qualitative results for decision making - this section will review the procedures for qualitative results. Effective hazard control requires a systematic, comprehensive and precise analysis of the system and its operation.

2.1.2. Elements of an Accident

The purpose of hazard evaluation is to identify possible accidents and estimate their frequency and consequences. In the guidelines prepared by the Center for Chemical Process Safety of the American Institute of Chemical Engineers (1), an accident is defined as a specific unplanned sequence of events that has an undesirable consequence. The first event of the sequence is the initiating event. Usually there are one or more events between the initiating event and the consequence. These intermediate events are to responses of the system and its operators to the initiating event. Different responses to the same initiating event will often lead to different accident consequences.

It is further stated that the accident be seen as a sequence of events because in theory, each individual event represents an opportunity to reduce the frequency or consequence of the accident. The system and operator responses are of two types : propagating, where the accident continues to propagate through the system; and ameliorating, where special systems or procedures come into play to reduce the level of consequences of the accident.

An evaluation of the hazards introduced by highly reactive, impurity - sensitive, or toxic materials should be a part of the concept development phase (1). Alternative materials should be considered and the penalties of using them compared to the cost of controls and safety systems that the more hazardous materials might require. Prior to completion of the plant design and construction, a thorough search for new hazards and new accident event sequences should be made. Adherence to good practice and predictive hazard evaluation are two basic approaches to hazard control (1).

The engineering analysis of plant behaviour under upset conditions provides the basis for estimating the extent of propagation of the accident within the plant. It provides the amount of release of flammable, combustible, highly reactive, or toxic materials to the area surrounding the plant.

The probabilities of the accident event sequences can be estimated easily if it is obvious that the probability is dominated by a single event and frequency data are available for that event. If that is not the case, the pertinent systems of the plant can be modelled with logic diagrams. The probability of each accident can then be determined from the combined probabilities of the individual events in the event sequence. Event Tree Analysis, described in section 2.1.3., can be used for this technique (1).

Hazard evaluation procedures can be used to reduce risk, for example by reducing the inventory of hazardous material that could be involved in an accident. It is a good method for reducing the consequence and thereby the risk. Sometimes a reduction in frequency of hardware malfunction or human error by better components, better maintenance, redundant components,

better training, better instrument displays etc. is the means of reducing risk. In other cases, safety systems will stop the propagation of an accident, but only if they function properly - which addresses the probability factor again. It is further explained (1) that mitigation systems that do not affect the probability of the event sequence, but do mitigate the consequences, may be a cost-effective way of reducing risk.

2.1.3. Event Tree Analysis

Event Tree Analysis is a technique for evaluating potential accident outcomes resulting from a specific equipment system failure or human error as an initiating event (2). The results of the Event Tree Analysis are a chronological set of failures or errors that define an accident. These results describe the possible accident outcomes in terms of the sequence of events (successes or failures of safety functions) that follow an initiating event.

Data requirements for an Event Tree Analysis include: knowledge of initiating events that is, equipment failures or system upsets that can potentially cause an accident. Also required are a knowledge of safety system function or emergency procedures that potentially mitigate the effects of an initiating event.

Event trees are a modified form of the decision trees traditionally used in business applications and provide a precise way of recording the accident sequences. They also define the relationships between the initiating events and the subsequent events that combine to result in an accident. By ranking the accidents, or through a subsequent quantitative evaluation, the most important accidents are identified (3).

2.1.4. Hazard and Operability (HAZOP) Studies

The HAZOP study was developed to identify hazards in a process plant and to identify operability problems which, though not hazardous, could compromise the plants' ability to achieve design productivity (4).

HAZOP was originally developed to anticipate hazards for new and/or novel technology where past experience is limited. Multidisciplinary teams are formed (4) that work together (brainstorming) to identify hazards and operability problems by searching for deviations from design intents. The results of a HAZOP study are typically qualitative.

2.1.5. Failure Modes, Effects, and Criticality Analysis

Failure Modes, Effects, and Criticality Analysis (FMECA) is a tabulation of the system/plant equipment, their failure modes, each failure modes' effect on the system/plant, and a criticality ranking for each failure mode (1). The failure mode is a description of how equipment fails (open, closed, on, off, leaks, etc,).

The effect of the failure mode is the system response or accident resulting from the equipment failure. FMECA identifies single failure modes that either directly result in or contribute significantly to an important accident. Human errors are generally not examined in a FMECA.

It is said (1) that FMECA is not efficient for identifying combinations of equipment failures that lead to accidents. The results are qualitative in nature. The data requirements for a FMECA analysis include a system/plant equipment list and knowledge of equipment and plant functions. This can be a drawback, since the knowledge and experience necessary is often only gleaned after a plant has been commissioned.

2.1.6. Cause-Consequence Analysis

Cause-consequence analysis is similar to Event Tree Analysis (discussed in section 2.1.3.) for evaluating potential accidents. A major strength (5) of Cause-Consequence Analysis is its use as a communication tool. The method can be used to quantify the expected frequency of occurrence of the consequences if the appropriate data are available.

Data requirements include a knowledge of component failures or process upsets that could cause accidents and knowledge of safety systems or emergency procedures that can influence the outcome of an accident.

2.1.7. Human Error Analysis

The final hazard evaluation procedure to be reviewed is human error analysis. This is a systematic evaluation of the factors that influence the performance of human operators, maintenance staff, technicians, and other plant personnel. A human error analysis will identify error-likely situations that can cause or lead to an accident. It can also be used to trace the cause of a given type of human error and can be performed in conjunction with a human factors engineering analysis.

The results are qualitative in nature with the relative ranking of errors being based on probability of occurrence or severity of consequences (6). Data requirements include plant procedures, information from interviews of plant personnel, plant layout and task allocation, and control panel layout and alarm system layout.

2.1.8. Factors Affecting which Procedure is Selected

Potential consequence levels can be evaluated whereby "worst case" conservative estimates of consequence levels can influence the choice of hazard evaluation procedure. For example, a potential large release of toxic materials can justify a more complete and detailed search for events and combinations of events that could cause such a release. Conversely, if there is high confidence of a low hazard level, a less exhaustive search for causes may be in order (7).

Provided that the procedures limitations are completely understood, familiarity of staff with certain procedures is an argument for using hazard evaluation techniques. Procedures are only as good as the data input and in the situation where quantitative results are required this is even more important.

Time for analysis and cost of the evaluations should not be an absolute factor in the choice of hazard evaluation procedures. However, it is a factor which should be compared to the cost of risk reduction opportunities which might obviate or reduce the cost of the analysis (1).

2.2. Maintenance

2.2.1. Introduction

The maintenance analysis of a system has as its objective the identification of failure situations and the formulation of appropriate maintenance policies. The maintenance of plant to reduce failures and stoppages is discussed in this section.

2.2.2. Maintenance Activities

Lees (7) mentions some maintenance activities which are carried out on process plants.

(1) Production assistance - adjusting machine and process settings.

(2) Servicing - replacement of consumables, including lubrication.

(3) Running maintenance - running repairs with little interruption to production.

(4) Shutdown maintenance - scheduled repair or overhaul with interruption to production.

(5) Breakdown maintenance - unscheduled repair with interruption to production.

The formulation of maintenance policies and the monitoring of maintenance activities, requires a suitable maintenance information system. Maintenance information would include failures responsible for hazardous conditions, plant downtime, and those responsible for direct repair costs.

2.2.3. Failure Regimes

The three regimes are early failure, constant, or random failure, and wearout failure. Lees (7) is in no doubt as to the occurrence of the three regimes in different equipments and also in the same plant. Failure data may be fitted to the Weibull distribution. The relation between the failure regime and the Weibull shape factor β is :-

$\beta < 1$ Early failure

$\beta = 1$ Constant failure

$\beta > 1$ Wearout failure

In many cases the equipment appears to be in the random or constant failure regime. If the failures of the equipment are truly random, then there is little point in carrying out scheduled maintenance or replacement. On the other hand, failure of an equipment is rarely truly random. If an equipment appears to be in the constant failure regime, it is usually worthwhile probing further. Often the apparent constant failure characteristic is due to the non-constant failure characteristics of the components of which it is constituted (7).

2.2.4. Wearout Failure

Since many equipments exhibit a wearout characteristic, the life may be determined and the equipment given scheduled maintenance. On the assumption that wearout follows a normal failure distribution and the mean life to wearout is m, the corresponding standard deviation is σ, then the maintenance policy is to overhaul or replace at a time m_o where :-

$$m_o = m - k\sigma$$

and σ is often taken as 0,1 m and $k\sigma$ is typically 0,6 m the above equation becomes :-

$$m_o = 0{,}4\ m.$$

2.2.5. Early Failure

The occurrence of early failure in many equipments is perhaps less expected, but has been found in process plant. The early failure regime is not necessarily associated only with the commissioning phase of the plant life. It is sometimes found in plants which are relatively old. Some reasons for early failure include (7) :-

(1) Design and commissioning faults

- (a) incorrect specification
- (b) incorrect selection
- (c) incorrect design
- (d) manufacturing faults
- (e) construction/installation faults.

(2) Maintenance faults

- (a) incorrect fault identification
- (b) incorrect repair technique
- (c) incorrect replacement parts
- (d) incorrect reassembly
- (e) dirty working conditions.

(3) Startup stresses : Mechanical stress and temperature stress.

In many cases the maintenance deficiencies can be traced to inadequate training or work discipline (7). As a result of early failure the overall failure rate of the equipment is higher than it need be and never settles down to the lower constant failure rate which might be regarded as the more normal condition.

2.3. Cost Estimating

2.3.1. Introduction

The economic viability of any project is under question from its inception. It is important that realistic and reasonably accurate estimates of its fixed capital cost should be available at an early stage in its development. Once a project has been approved the cost estimate, after suitable refinement, becomes a yardstick against which total project progress and success is measured. This section will discuss aspects of cost estimating and the methodology of cost estimates.

2.3.2. Methodology of Cost Estimates

Once the purpose of an estimate is established, the type of information available must be investigated and the scope of the work covered by the estimate must be defined. The next step would be to determine the time available for its preparation and the amount of effort that can be put into it. This, in turn, will fix the type of estimate required, the procedure to follow, and will determine the degree of accuracy expected.

2.3.3. Exponential Costing

Exponential methods permit cost estimates to be made rapidly by extrapolating cost data from one scale to another. Thus the total cost of a proposed plant can be derived from historical cost data by using :-

(1) The total cost of a similar (reference) plant.

(2) A comparatively simple breakdown of the costs of a similar plant.

(3) Costs for parts of related plants that can be assembled to represent the proposed plant.

The Institution of Chemical Engineers (8) discusses the basis for the cost of a specific item (for example a pump, furnace, reactor etc.). This normally depends on size or scale and can usually be correlated by the approximate relationship :-

$$C = Cr\ (S/S_r)^n \qquad \ldots\ldots\ldots\ldots\ldots\ldots\ldots \quad 2.3.1.$$

Where C = Cost of the item at size or scale S.

Cr = Cost of the reference item at size or scale Sr.

n = Scale exponent.

The dimensions of S must be chosen to suit the type of item. Scale exponents (n) are usually between 0,3 and 1,0, typically 0,6; for this reason the exponential method is often dubbed the "six-tenths rule".

Balfour et al (9) cautions against differences between two identical process plants. A different location invariably dictates different conditions. The weakness of this procedure lies in the uncritical application of this formula. A fundamental understanding of the limitations of the method is required in order that adjustment for scope and composition of cost, cost escalation, economic conditions, special site conditions, and productivity can be made.

De la Mare (10) estimates the capital cost of a single machine or a complex process from the following relationship :-

$$C_A = C_B \, (Q_A/Q_B)^{\alpha} \, I_I . \, I_P \quad \ldots\ldots\ldots\ldots \quad 2.3.2.$$

where : C_A = capital cost of proposed plant.

C_B = known capital cost of an existing plant

Q_A = production capacity of the proposed plant

Q_B = production capacity of the existing plant

α = appropriate cost exponent factor

I_I = index of cost inflation

I_P = index of productivity improvement.

The error involved with this technique is usually in the range ten to thirty percent of the actual final cost.

2.3.4. Functional Unit Method

This method, which is also known as the module method, is often used in chemical and closely related industries. Essentially, it relates the capital cost of a plant to the conditions affecting its capacity, complexity, severity of operations and the number of distinct steps in its production process. De la Mare (10) represents this method in general functional form by the expression :-

$$C = f(N.Q.T.P.M.)$$

Where : C = the total capital cost of the project

f = the functional relationship

N = the number of distinct process steps

Q = the capacity of the process

T = some temperature relationship

P = some pressure relationship

M = some relationship which allows for various materials of construction.

This method is able to provide estimates with errors in the range of fifteen percent. Such a technique is therefore most useful at the initial stages of a project where detailed flow-sheets and designs are not available.

2.3.5. Factorial Costing

This technique, which is attributed to Lang (11), relies on detailed cost estimates of the main plant items (MPI), which constitute the production process. The simplified expression is given below :-

$$TCC = \overline{F}_L.(CMPI)$$

where : TCC = total installed capital cost of the plant

$\overline{F}_L$ = overall average Lang factor

CMPI = delivered total capital cost of the main plant items.

Lang factors have been derived and typical values for these factors for relatively small projects are 3,9 for plants using solids only, 4,1 for plants using solid-fluid processes, and 4,8 for plants using fluid processes only. These factors allow for the civil and structural engineering works required to support plant and machinery, supply of electrical, gas, fuel, water, air and refrigeration services, the interconnection of the main plant items by ducting and piping and for their instrumentation and insulation. Errors involved in factorial costing are usually quite low and in the range of approximately ten percent (10).

De la Mare (10), furthermore, emphasizes two important points relating to the use of this technique. Firstly, the factors invariably relate to equipment fabricated from mild steel. Some correction factors would have to be used if items were fabricated from more expensive and exotic materials. Secondly, these cost estimates only include the cost of equipment within a plants' battery limits.

An improved Lang factor approach to capital cost estimating has been put forward by Montfoort and Meyer (13). The dependence of the Lang factor on equipment cost or on production capacity is well represented by the following equations :-

$$L = \lambda . (Eo.\phi)^{0.22} . (\bar{E}/CI)^{-0,22}$$

Where : L = Lang factor

λ = Enterprise dependant factor

Eo = Basic cost of an uninstalled equipment item

ϕ = correction factor for relative throughput, reaction time, storage time, multistreaming and special processing methods.

$\bar{E}$ = Long factor related to mean equipment cost

CI = plant cost index (referenced 100 to 1970)

and

$$L = 5{,}6 \cdot P^{0{,}11}$$

where : L = Lang factor

P = plant output in thousands of tonnes per annum.

Although useful in preliminary cost estimates for a company, care should be exercised as to some of the limitations. These would notably be the Lang factor modifications with regard to plant capacity and output.

2.3.6. Allowing for Productivity Improvements

The estimation of a capital cost should also allow for productivity improvements during the design, fabrication and erection stages of a project as well as during its subsequent operation. Improvements to the production capacities of plants and machines can be quite adequately modelled by the following equation, which is attributed to Hirschmann (12) :-

$$Q_t = Qo + (Q_\infty - Qo)(1 - e^{-kt})$$

where : Q_t = the plant capacity at some time t

Q_o = the plant capacity as designed

Q_∞ = some upper limit in the capacity of that plant after debottlenecking.

e = exponent 2,71828

k = emperical learning coefficient

t = time interval since the plant was first built.

2.4. Materials Selection

2.4.1. Introduction

This section will aim to review some of the important aspects regarding the materials of construction for this project. In particular, it will focus on the materials requirements for the reactor part which is subjected to high temperatures and aggressive atmospheres. With these constraints, no suitable material could be found that would satisfy the operating conditions as well as the design and fabrication or processing limitations. Thus, a range of materials was considered to determine the most suitable under commercially available fabrication, operating, and cost conditions.

Ir the context of motivation for selection of materials, Crane and Charles (14) have shown how the situation regarding the selection process imposes its own constraints on how the problem is approached, and the way in which an answer is provided. Frequently, only materials that can be obtained within the planned production programme are allowable. This is a situation which militates against the exotic or non-standard solution.

Often decisions also have to be made without the benefit of the best possible data. Finally, the process of selecting a promising material will be done initially in terms of the required properties, but final decisions will always involve considerations of cost. This in most cases will be the domirant criterion.

2.4.2. Service Requirements and Failure Analysis

Pick (15) has said that "Material - and process - selection always involves the act of compromise - the selection of a combination of properties to meet the conflicting technical, commercial, and economic considerations".

Crane and Charles (14) put forward that frequently all that can be done is to take account of the relative importance of various service requirements and pitch the compromise accordingly. Thus in formalized quantitative selection procedures, weighting factors are applied to individual properties in reaching the best compromise. A weighted properties method has been formalized by Waterman (16).

The causes of failure in service, according to Crane and Charles (14), can be classified as arising from a number of main origins. These include errors in design, inherent defects in a material properly selected, defects introduced during fabrication and deterioration in service. The possible mechanisms of failure are brittle and ductile fracture, fatigue (high or low cycle), creep, buckling, corrosion, corrosion fatigue, stress corrosion, and wear processes.

2.4.3. Corrosion of Stainless Steels by Hot Gases

Although stainless steels are popular materials for high temperature service, they will react with most gases at high temperature to form surface scales. Conditions that give rise to very slow scale growth are obviously desirable. Those that favour rapid scale growth are undesirable since rapid formation will quickly consume the stainless steel. In some gases (for example halogens), volatile reaction products can be formed which vapourize from the surface. In other cases there is preferential brittle oxide formation along grain boundaries. Accordingly, it is not possible to describe attack by high temperature gases in terms of any single unifying mechanism (14).

Sulfidation is a term used to describe attack by high temperature gases containing sulphur compounds such as sulphur dioxide, hydrogen sulphide or sulphur vapour. Sedriks (17) states that attempts to define sulfidation in terms of gas/metal reactions are further complicated by the fact that attack can sometimes be caused by molten phases such as low melting point metal/metal sulphide eutectics as given in Table 2.1. (18) below :-

TABLE 2.1. - Melting Points of Several Metal/ Metal Sulphide Eutectics

Eutectic	Melting Point, °C
$Ni-Ni_3S_2$	645
$Co-Co_4S_3$	880
Fe-FeS	985
$Al-Al_xS_x$	~1070
Cr-CrS	~1350

It is reported (19) that although the scaling rates of high chromium stainless steels are higher in dry sulphur dioxide environments than in air the scaling resistance of these materials is considered acceptable. The higher scaling rates in sulphur dioxide are attributed to the formation of chromium sulphides below the protective chromium oxide scale.

The mechanism is thought (17) to be associated with the regeneration of free sulphur which can react with the chromium and the other alloy constituents. The generally accepted maximum service temperatures for stainless steels in sulphur dioxide environments are shown in Table 2.2. (18).

TABLE 2.2. - Generally Accepted Maximum Service Temperatures in Sulphur Dioxide for Selected Stainless Steels

Material	Temperature, °C
304	800
321	800
347	800
310	1050
410	700
430	800
446	1025

Corrosion of stainless steels and higher alloys in high temperature chlorine and hydrogen chloride can best be understood by recognizing that different processes govern the corrosion rate at high and low temperatures. At high temperatures, the corrosion process is governed by the formation and volatilization of the chloride scale. Thus the maximum operating temperatures are generally a function of the nickel content of the alloy, since nickel forms one of the least volatile chlorides (17). At lower temperatures, chloride scaling rates are probably determined by diffusion through the chloride scale and the protectiveness of this scale.

For stainless steels the upper temperature limit for operation in dry chlorine and hydrogen chloride is about 320 °C as indicated in Table 2.3. (20).

TABLE 2.3. - Corrosion of Stainless Steels in Dry Chlorine and Hydrogen Chloride at Elevated Temperatures

Gas	Material	Approximate Temperature, °C for Given Corrosion Rate *		
		30 mils/yr	60 mils/yr	120 mils/yr
1	304	290	315	345
	316	315	345	400
2	304	345	400	455
	316	370	370	480
	309+Cb	345	400	455

1 = Chlorine

2 = Hydrogen Chloride.

* = Corrosion rate based on short term tests of two to twenty hours.

For higher temperature service, higher nickel alloys or pure nickel are necessary. Since at these higher temperatures volatilization of the chloride is taking place, the corrosion rate is also affected by gas flow rate, chlorine partial pressure, and specimen configuration. Dry hydrogen chloride is slightly less corrosive than dry chlorine (17).

2.4.4. Alternative Materials

The only range of alternative materials that are available for high temperature aggressive environments are the refractory metals and ceramics. The refractory metals such as tungsten, tantalum, and molybdenum are commercially available. However, they possess low resistance to oxidation. The ceramics, or more specifically engineering ceramics, consist of sintered oxides of aluminium, magnesium, beryllium, zirconium, thorium and certain borides, carbides, nitrides and silicides. These are generally polycrystalline containing little or no glass phase.

All ceramics are hard and brittle and vulnerable to thermal shock. Carbides and borides tend to oxidize rapidly at temperatures above 1 000 ^{o}C (14). The most promising ceramics for advanced engineering applications are silicon carbide and silicon nitride which are resistant to scaling and oxidation and able to with stand temperatures up to 1 200 ^{o}C in aggressive gaseous environments. Generally (16) the oxide-based ceramics are subject to attack in oxidizing atmospheres having a high sulphur content. Carbide ceramics are also oxidized at high temperatures (500 - 1 400 ^{o}C, depending on the type).

3. EXPERIMENTAL PROCEDURE

3.1. Introduction

The project was conducted on two levels namely laboratory scale and pilot scale. Much time, effort, and money is saved on any project by conducting trials on the laboratory scale before proceeding to production scale. The laboratory scale was concerned with determining which residue materials were viable and to obtain an indication of which parameters were important. The pilot scale sought to validate the laboratory testwork, as well as give an indication of expected production problems. Details concerned with the laboratory and pilot scale testwork will be discussed in this section.

3.2. Process Design

Chlorination reactions are generally conducted in fluid bed reactors. However, because of the special demands on the process for treating precious metal residue materials, namely to prevent contamination of the impurity condensate with purified precious metals and to achieve optimum hydrogen chloride utilisation a downflow, vertical packed bed batch reactor was considered to be more effective and simpler to construct and operate.

In broad terms hydrochlorination involves the passing of hydrogen chloride gas through the packed bed. The operating temperature in this instance ranges between 800 and 1 000 ^{o}C. Gas-solid reactions occur in which volatilization of the base metal chlorides takes place. A high temperature filter prevents solid particles from passing through but permits the base metal chloride gas to pass down the reactor. The material which remains unhydrochlorinated, that is that which does not pass through the filter, is the enriched residue containing a higher level of precious metals.

On reaching the cooler zones of the reactor, gas condensation occurs. To this end a condenser is attached to the bottom end of the reactor where the solid base metal chlorides are collected. The exhaust gases pass through a wet scrubber where any remaining toxic substances are dissolved and collected. Figure 3.1. shows a schematic of the hydrochlorination principle as used in this project.

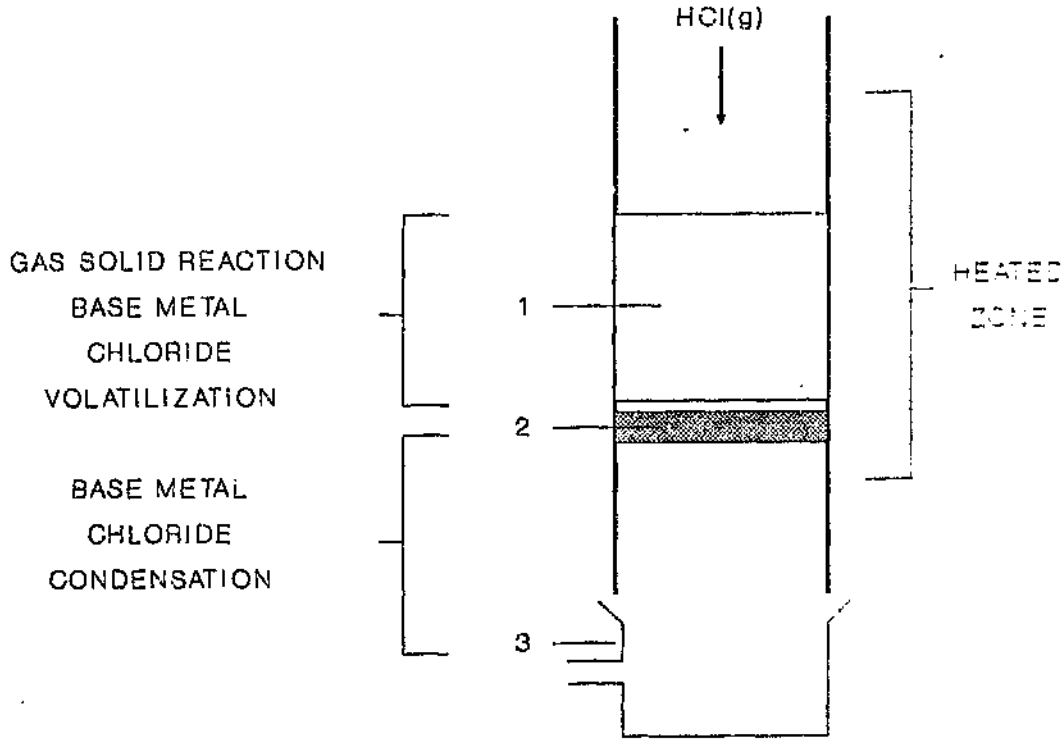

1 RESIDUE
2 HIGH TEMPERATURE FILTER
3 CONDENSER

FIGURE 3.1. - Schematic Showing the Hydrochlorination Principle

3.3. Laboratory Scale Apparatus

The laboratory scale testwork was carried out using a silica glass reactor and condenser and single zone electric tube furnace. The silica glass reactor was one metre long with a porous filter positioned halfway from the top. Its diameter was 27 mm. Both ends were ground and flanged to facilitate easy connection of the reactor head and condenser. Reactor pressure was monitored using an in-line manometer. Temperature was measured using a type K thermocouple placed in a thermowell extending down into the material being tested and recorded on a Camille Bauer temperature recorder.

Heating was by means of a single zone electric tube furnace with a six kilowatt fifteen amp power rating and a Eurotherm furnace controller. Heating rates from room temperature to 1 000 ^{o}C were approximately forty minutes. Gas flowrates were monitored using a Krone flowmeter. Hydrogen chloride (technical grade 99,5 percent) and nitrogen were dispensed from standard 40 kilogram gas cylinders. Gas flowrates were maintained between six and ten litres per hour depending on the test.

Nitrogen was used to create an inert atmosphere during heat up and cool down periods thus preventing any possible oxidation of the residue material.

The high temperature filter used in this project was specially developed to be resistant to the high temperatures and aggres ive environment. It consisted of a coarse silica disc upon which was placed an alumina silicate cloth commonly used in heat insulation applications. The disc provided the necessary rigidity, while the cloth acted as an excellent fine particle high temperature filter. The operation of this high temperature filter proved most adequate. A conventional glass flask was used as the condenser. The laboratory apparatus is shown in Figure 3.2.

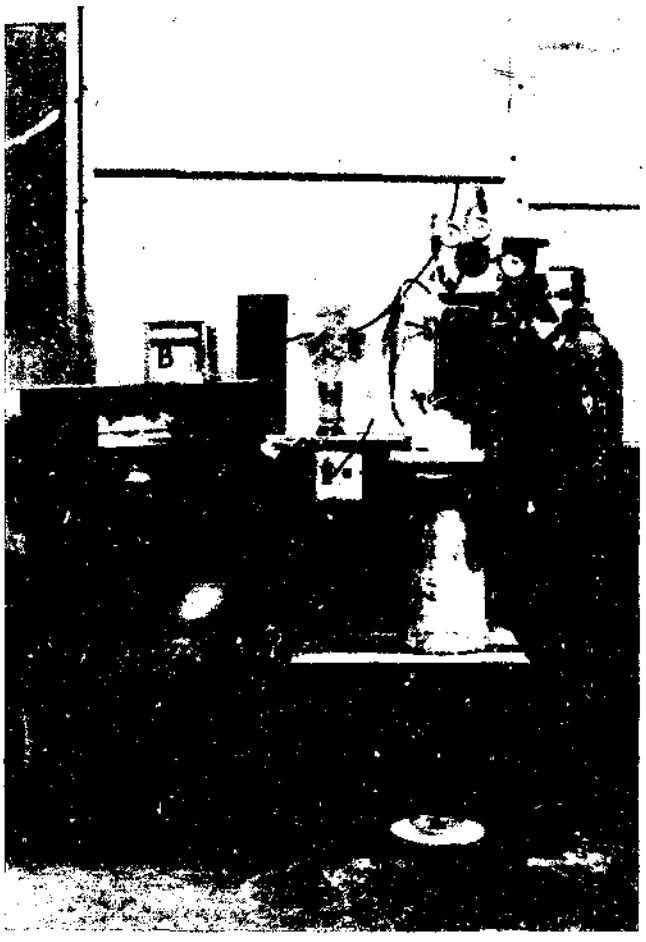

A Furnace controller

B Temperature recorder

C Electric furnace

D Silica reactor

E Condenser

F Gas supply

FIGURE 3.2. - Figure Showing the Laboratory Scale Apparatus

3.4. Corrosion Tests

Simulated corrosion tests were conducted on three stainless steel and one pure nickel material; these being stainless steel Type 304, Type 316L, Type 310, and an electrolytically produced nickel. The stainless steel specimens were cut from 15,0 mm round bar in 10,0 mm slices. The nickel specimen had dimensions 25 mm x 15 mm x 5 mm.

The tests involved placing the coupons in the laboratory scale silica glass tube. A routine hydrochlorination test was selected for this purpose. The material being tested was a common residue under usual conditions of 1 000 °C, five to ten litres per hour of hydrogen chloride gas, and of three hour total duration.

3.5. Pilot Scale Facility

The pilot scale facility posed more difficulties than did the laboratory scale apparatus. Where the silica glass tube used in the laboratory scale reactor was totally resistant and inert to the high temperatures and aggressive environments involved, this silica glass material could not be used in the pilot reactor.

The reasons for this will be discussed in section 4.6. Initially two silicon carbide reactors were specially manufactured by Cumar Resistant Materials (Pty) Limited but failed in their trial runs. They were found to be porous and thus unsuitable. Preliminary simulation tests were conducted on two other types of silicon carbide namely :-

(1) A reaction bonded silicon carbide used in the production of hydrogen chloride gas by means of a hydrogen and chlorine burner nozzle. This is a material unique to Sigri-Ringsdorf (Pty) Limited.

(2) A silicon carbide used in the high temperature nuclear industry and supplied by a West German concern Nukem GmbH. The characteristics of this material are classified.

Preliminary simulation tests involved the placing of a specimen of the parent material into the laboratory scale reactor during one of the routine hydrochlorination tests. Any changes regarding surface appearance and possible degradation or mass loss were noted and used in evaluating the suitability of a prospective reactor material.

Three stainless steel reactors were also fabricated. Two were stainless steel Type 316L with dimensions 1,58 m length, inside diameter 100,0 mm, and wall thickness 4,0 mm. The third reactor was of stainless steel Type 310 with dimensions 1,58 m length, inside diameter 130,0 mm, and wall thickness 5,0 mm.

The high temperature filter used in the pilot facility was specially developed to tolerate the high temperature and aggressive environment as well as the larger dimensions of the reactor. It consisted of a silicon carbide filter used in the metal casting industry and was supplied by Foseco (Pty) Limited under the trade name Sedex. The same alumina silicate filter cloth as used in the laboratory scale system provided the fine particle filter mechanism. Thus, the Sedex disc provided the overall rigidity while the alumina silicate cloth prevented the transport of any particles including any possible fine precious metal particles. The filter cloth was cemented to the Sedex disc at its periphery and positioned within the reactor on a filter support ring. This is schematically shown in Figure 3.3.

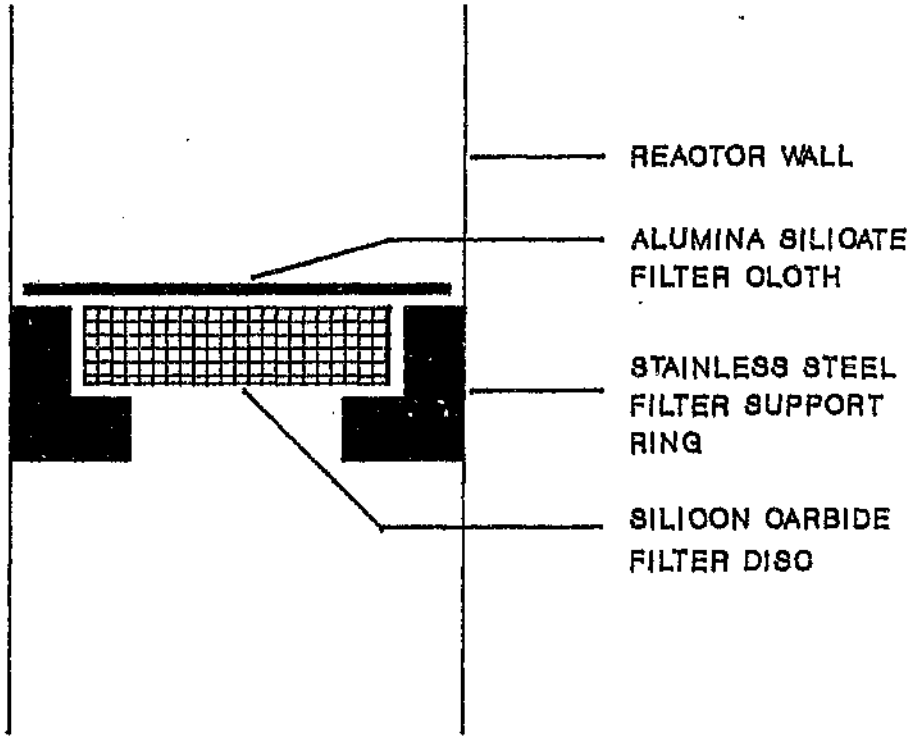

FIGURE 3.3. - Schematic Showing Pilot Scale High Temperature Fine Particle Filter Arrangement

Heating was by means of a Carbolite three zone electric furnace. The furnace was able to tilt from the horizontal to the vertical position about its center. Furnace output was 27 amps per phase with a maximum temperature of 1 400 °C along a heated zone of approximately two metres and a chamber size of 0,15m by 0,15m. Figure 3.4. shows the complete pilot facility with the furnace and reactor in the vertical position.

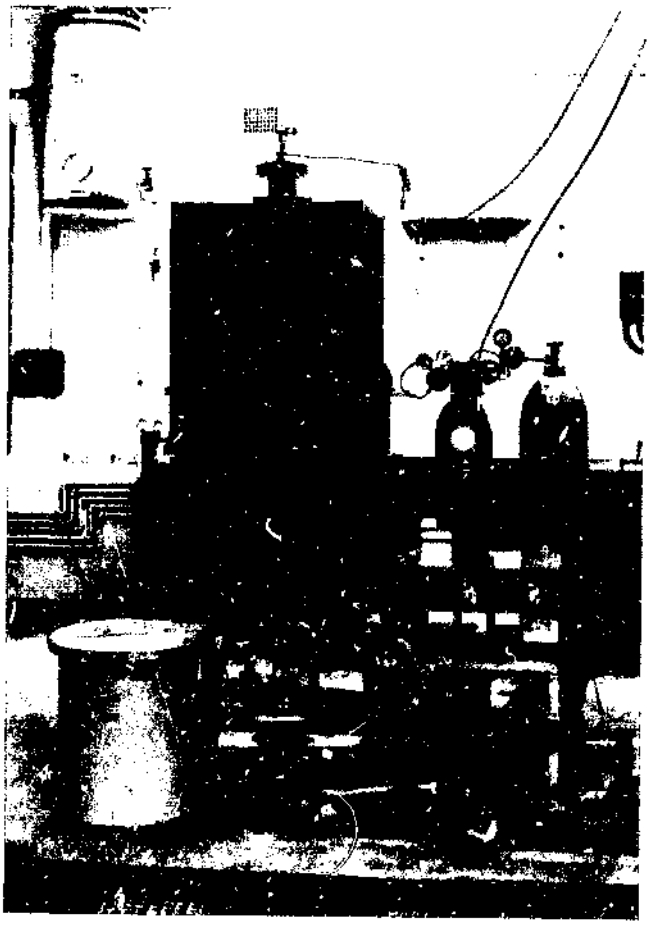

A Three zone electric furnace

B Condenser

C Wet scrubber

D Gas supply

E Furnace controller

F Temperature recorder

G Stainless steel reactor

FIGURE 3.4. - The Pilot Facility for the Hydro-chlorination Project

Temperature was measured using a Type K thermocouple protected by a stainless steel Type 316L thermowell. The thermowell was situated in the centre of the reactor and extended to within 20,0 mm of the filter. Temperature was recorded on a Camille Bauer recorder. Reactor pressure was measured using a Wika Instruments pressure gauge. Its wetted parts were protected by polytetrafluorethylene (PTFE) against the hydrogen chloride gas stream. Gas flowrates were measured using a Krone flowmeter calibrated between 50 and 3 000 litres per hour of gas.

Toxic exhaust gases from the glass condenser were taken in by the wet scrubber. A vacuum was created using a Venturi pipe in the scrubber system. The creation of a vacuum to draw off the exhaust gases also prevented the release of any toxic gases to the surroundings, notably at the reactor end and condenser neck junction. A laboratory jack was used to seat the condenser neck onto the reactor bottom end.

The residue material to be tested was loaded into the reactor after the filter system was positioned, the lid bolted to the reactor flanged end, the reactor then placed in the furnace, and clamped in position. The furnace was then tilted to the vertical position, the gas and thermocouple connections made, and the condenser lifted into position, the test would then be ready to proceed.

3.6. Thermal Conductivity Tests

In the initial stages of the project it was thought that the thermal conductivity of the residue material would be an important factor in the hydrochlorination process. It was known that the hydrochlorination reactions of base metals are endothermic and that sufficient heat was required to initiate and sustain the reactions. It was thus necessary to ascertain the nature of the thermal gradients within the reactor. For reasons to be discussed in section 4.2. only the times taken for specific samples to reach thermal equilibrium were noted to yield an indication of the thermal characteristics of a particular residue material.

Figure 3.5. shows a schematic of the apparatus employed. Four different residue materials RI, AC, CU, and FA as well as two more well known materials magnesium oxide and silica were tested. The materials were all in their naturally occurring dry powder forms. The powder was poured into an insulated glass tube of diameter 23,0 mm to a height of 75,0 mm. No compacting of the powder was applied. The glass tube was then placed on the hot plate and the time taken for the sample to heat up and reach equilibrium was noted. The results are given and discussed in section 4.2.

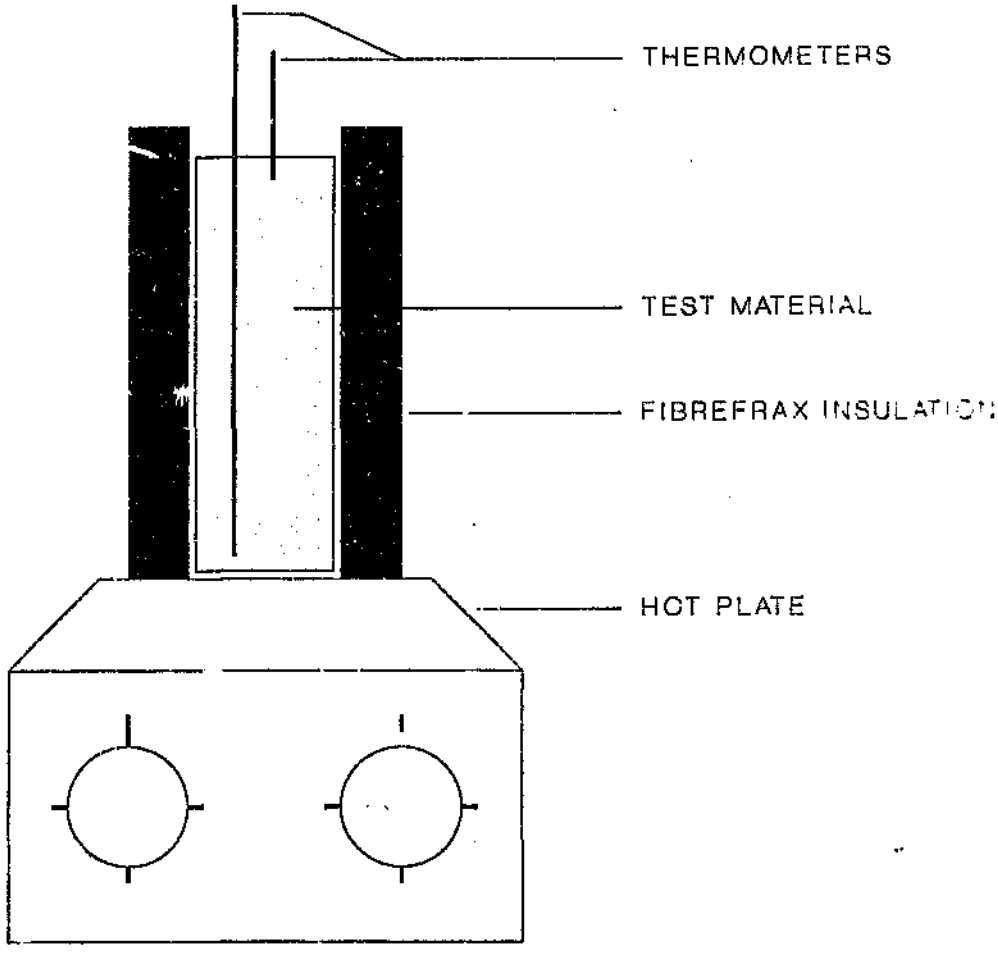

FIGURE 3.5. - Schematic Showing Thermal Characterization Procedure

4. RESULTS AND DISCUSSION

4.1. Corrosion Tests

Four metallic materials were tested under simulated hydrochlorination conditions which are described in section 3.4. The corrosion rate given in millimetres per year (mm/yr) was determined using the expression given below (21) :-

Corrosion rate = 87,6.W/(D.A.T.)

Where : W = mass loss, mg

D = density, g/cm^3

A = surface area, cm^2

T = exposure time, hours

The corrosion rate of the four tested materials is given in Table 4.1.

TABLE 4.1. - Corrosion Rates

Material Type	Mass Loss (mg)	Corrosion Rate (mm/yr)
Electrolytic nickel	1986,0	482
Stainless Steel Type 304	491,0	355
Stainless Steel Type 310	333,0	224
Stainless Steel Type 316L	206,0	138

The best corrosion resistant rates were achieved on the stainless steels, Type 316L and Type 310. These corrosion rates may be considered as very high and would normally be considered as totally unacceptable and rejected out of hand. However, in the context of a short life replaceable reactor under aggressive conditions these two materials warranted further consideration. It was largely on the basis of these results that initially a Type 316L pilot scale reactor tube and subsequently a Type 310 and Type 316L pilot scale reactors were commissioned for testwork.

Since corrosion embraces the destruction or degradation of materials the performance of the silicon carbide materials tested is discussed in this section.

Both silicon carbide samples were tested under the identical conditions as the metallic materials. Disappointing results were achieved. The Sigri-Ringsdorf reaction bonded silicon carbide had a mass loss of some ten percent. Apparent graphitization of some regions and general degradation of the surface rendered this material unsuitable for further investigation. The Nukem supplied silicon carbide material showed a mass loss of approximately eight percent after the simulation hydrochlorination test. Surface degradation was not uniform but localized to a few relatively large areas on the surface. It was this phenomenon which discouraged further consideration of this material and in fact both silicon carbide materials.

4.2. Thermal Conductivity Tests

As stated in section 3.6. the hydrochlorination of residue materials is an endothermic process. For this reason it was necessary to gain an appreciation of the thermal characteristics of the residue materials. The results of the tests conducted, which are described in section 3.6., are given in Table 4.2.

TABLE 4.2. - Time Taken to Attain Thermal Equilibrium

Material	Time to Thermal Equilibrium (minutes)
RI	105
AC	90
CU	60
FA	65
MgO	60
SiO_2	75

The thermal conductivities of loose silica and magnesium oxide powders are in the 0,0001 cal/cm.s.^{o}C regime (22).

The major difficulty in evaluating the thermal conductivity of the residue materials is the quantification of the heat fluxes. Experimental models do exist (23) whereby the thermal conductivities of packed beds under a forced gas flow can be evaluated. However, due to the complexity and cost of instituting these models it was decided not to investigate residue thermal conductivities.

In order that an approximate estimate of the thermal conductivities of the residue materials could be made the test described in section 3.6. was conducted. From the results given in Table 4.2. only comparisons can be drawn and related to the known values for silica and magnesium oxide powders. Thus, it can be fairly confidently concluded that the residue materials have thermal conductivity values in the region of 0,0001 cal/cm.s.^{o}C.

This is a low value for the thermal conductivity of a solid but not abnormal in terms of the fact that the residues for hydrochlorination are fine powders. In addition a large percentage, up to 50 percent, of the residue comprises silica and so it can be said the interpolated thermal conductivity values are fair and reasonable.

4.3. Hazard Evaluation

The aim of a hazard evaluation exercise is to identify and evaluate process hazards. With regard to this hydrochlorination project process, hazards on two levels were able to be monitored. Namely, the laboratory apparatus and the larger pilot scale facility. Since the basic difference between the laboratory apparatus and the pilot facility was the reactor, some inherent hazards on the one reactor may or may not necessarily have occurred on the other unit.

4.3.1. Hydrochlorination Hazard Elements

Inherent in the hydrochlorination process was the use of hydrogen chloride gas. It was supplied in 20 or 40 kilogram bottles. Pressure gauges, valves, and fittings were of the Monel type to ensure the most effective resistance to corrosion and therefore component failure.

The early failure, within twenty minutes, of the first Monel regulator used on the laboratory apparatus resulted in the leakage of hydrogen chloride gas. The gas is pungent, toxic, and has a suffocating odour. It is heavier than air and fumes strongly in the atmosphere. The gas leak was visually detected by a dense white fume.

Inhalation of the hydrogen chloride caused irritation of the upper respiratory tract of the operator. A concentration of about 35 parts per million causes irritation of the throat after short exposure. More severe exposures result in pulmonary edema, and often in laryngeal spasm. Skin contact with the vapour results in severe skin irritation.

Concentrations of 1 3 00 to 2 00 parts per million in air are lethal to humans on brief exposure (up to a few minutes). The maximum that can be tolerated for several hours exposure is 10 to 50 parts per million. The Threshold Limit Value is five parts per million.

Hydrogen chloride leaks can be detected well before a hazardous situation arises. As was experienced in the first incident, a gas leak was evident by the formation of white fumes on contact with the atmosphere. Small leaks may be detected by holding an open bottle of concentrated ammonium hydroxide solution near the site of the suspected leak. Dense white fumes will evolve. Wet blue litmus paper will turn pink when exposed to a hydrogen chloride leak.

4.3.2. Hazard Evaluation

For the purpose of this project it was decided that the hazard evaluation should take the form of an Event Tree Analysis with an additional analysis using HAZOP and FMECA.

The probabilities of failure required for such an analysis are drawn from the laboratory and pilot scale operations. Four components of the hydrochlorination design were identified as being likely hazard causing candidates.

(1) Hydrogen Chloride Gas Supply

This component was a direct function of the probability of failure of the regulators, valves, and piping. Four Monel regulators were used in the tests with the first one failing within twenty minutes. The remaining three continued to perform satisfactorily. The probability of failure under the project conditions may then be taken as 0,25.

Valves and fittings. During the course of the testwork one valve and two fittings needed replacement. The overall number of valves and fittings used was 14. The probability factor was thus 0,2.

4.3.2. Hazard Evaluation

For the purpose of this project it was decided that the hazard evaluation should take the form of an Event Tree Analysis with an additional analysis using HAZOP and FMECA.

The probabilities of failure required for such an analysis are drawn from the laboratory and pilot scale operations. Four components of the hydrochlorination design were identified as being likely hazard causing candidates.

(1) Hydrogen Chloride Gas Supply

This component was a direct function of the probability of failure of the regulators, valves, and piping. Four Monel regulators were used in the tests with the first one failing within twenty minutes. The remaining three continued to perform satisfactorily. The probability of failure under the project conditions may then be taken as 0,25.

Valves and fittings. During the course of the testwork one valve and two fittings needed replacement. The overall number of valves and fittings used was 14. The probability factor was thus 0,2.

Piping. The major piping material was quarter inch (6,35 mm) polypropylene and a short section (0,5m) length of Type 316L stainless steel tube on the pilot facility which was in close proximity to the furnace. Although no pipe failure was experienced, a low probability of failure of 0,01 was expected.

(2) Furnace Operation

Factors which were expected to upset furnace operation were power failure, thermocouple malfunction, and heating element failure. No power failure or thermocouple malfunction was evidenced. A probability factor of 0,01 was assigned. Two out of eighteen heating elements broke yielding a probability factor of 0,1.

(3) Reactor Failure

It was expected that the reactor would fail in service. High temperature corrosion was found to be the cause of failure on the first of three stainless steel reactor tubes. The important aspect in this situation was the early detection of a possible failure. It was established that after 40 hours service the reactor would be withdrawn from service. The probability that the reactor would fail before the 40 hour limit was set at 0,2.

(4) Exhaust

The exhaust system consisted primarily of the bottom section of the reactor, the glass condenser, and wet gas scrubbing unit. At no stage did the reactor itself block although it was expected to possibly do so. This factor was thus set at 0,01.

Leakage of extremely toxic exhaust gases did occasionally occur at the junction of the reactor bottom end and the condenser opening. This was overcome with the introduction of a vacuum into the wet scrubber. An external positive pressure thus prevented the escape of any toxic gases at this junction and the probability of such an incident occurring was reduced to 0,01.

The event tree for evaluating the potential accident outcome is given in Figure 4.1.

HAZARD	HAZARD EVENT		CAUSE OF HAZARD	PROBABILITY FACTOR	COST (RAND)
HAZARD	HYDROGEN CHLORIDE GAS SUPPLY	1 182	REGULATOR	0,25	3 500
			PIPING	0,01	700
			VALVES & FITTINGS	0,2	1 500
	FURNACE OPERATION	75	POWER FAILURE	0,01	500
			THERMOCOUPLE FAILURE	0,01	1 000
			HEATING ELEMENT FAILURE	0,1	600
	REACTOR FAILURE	1 200	HIGH TEMPERATURE CORROSION	0,2	1 600
	EXHAUST	11	REACTOR	0,01	100
			GLASS CONDENSER	0,01	500
			WET SCRUBBER	0,01	500

FIGURE 4.1. Hazard Evaluation Event Tree

The Event Tree shown in Figure 4.1. required the cost of a particular hazard cause. This was taken to be the minimum replacement cost and the extent of disruption to the process of a particular unit.

The hazard evaluation event tree was thus used to quantitatively define the relationship between four expected hazard events. The most important accident identified was that which would occur due to the hydrogen chloride gas supply and the failure due to high temperature corrosion of the reactor.

4.4. Maintenance

The identification of failure or hazard situations was discussed in section 4.3. Maintenance of plant and equipment would aim to reduce failures and stoppages. This would enable the smooth and continuous operation of the hydrochlorination facility.

4.4.1. Failure Regimes

Three failure regimes are discussed in section 2.2. namely, wearout failure, constant or random failure, and early failure. In terms of the testwork carried out on the pilot scale hydrochlorination facility all three regimes were observed.

Early failure, having Weibull shape factor β less than one, was witnessed with the hydrogen chloride gas regulator. Failure occurred within twenty minutes of operation. The reason for this was a manufacturing fault. Although it was not expected to fail, such early failures are common to process plants. This type of failure cannot be prevented, but by having a standby unit the downtime and production loss can be minimised.

Constant or random failure, having a Weibull shape factor β equal to one, was observed in valve and fittings failures. This was attributed to the corrosion of these components which were fabricated from stainless steel Type 316L. The specifications called for Monel components. Situations arose whereby Monel components were not locally available and had to be air freighted from overseas. In order that testwork could proceed in the intervening period the stainless steel components, which are locally available, were used. In this situation it cannot be said that constant or random failure was due to the non constant component characteristic.

Wearout failure, having a Weibull shape factor β greater than one, was evidenced in the failure of the stainless steel Type 316L reactor on the pilot scale hydrochlorination facility. The replacement of the reactor at 40 hour intervals would thus form part of a routine replacement of a consumable item. It was this factor which ensured the continued existence of the project. As pointed out throughout this project report no commercially available material was available which could withstand the aggressive hydrogen chloride gas and high temperature environment on a continuous basis.

4.5. Cost Estimation

A detailed cost estimate for the proposed production hydrochlorination facility was not within the scope of the project. In order that the future viability and further testwork on the project could be justified a preliminary cost estimate was required. This was based on the costs incurred on the pilot hydrochlorination facility.

The exponential technique was used to estimate the costs involved with the proposed hydrochlorination facility. Rapid estimations are possible by extrapolation of data from one scale to another. Equations 2.3.1. and 2.3.2. given in section 2.3.3. are used to arrive at capital cost estimates.

Major items that were included in the cost estimate evaluation together with the amount are given in Table 4.3.

TABLE 4.3. - Cost of Pilot Scale Items

Item	Amount (Rand)
Tiltable three zone electric furnace*	60 000,00
Stainless steel Type 310 reactor	5 000,00
Stainless steel reactor lid and thermowell	800,00
Pressure gauge and gas flowmeter	3 000,00
Thermocouples	500,00

* Regarding the tiltable three zone electric furnace:- the amount quoted of R60 000,00 was based on the replacement cost of the existing unit which was imported from the United Kingdom in the early 1970's.

The size of the pilot scale facility was described in terms of the quantity of residue material that was charged. This averaged at five kilograms. A reasonable upscaling factor of ten times resulted in a production capacity of 50 kilograms per reactor batch.

The scale factor was 0,6. Equation 2.3.2. required additional information namely, the index of cost inflation I_I and the index of productivity improvement I_P. The cost of inflation was conservatively set at 15 percent per annum. In keeping with normal business practice that ensured a productivity improvement which at least matched the annual inflation rate this factor was set at 15 percent per annum.

Thus, the capital cost estimate for the proposed production hydrochlorination facility was evaluated to be R120 000. The error associated with this derived estimate is in the range ten to thirty percent.

The capital cost estimate for the proposed production facility was considered realistic. The expected return from precious metals treatment justified the continued progress of the project notably in terms of optimizing the operating conditions and better characterization of the precious metals residues being treated.

4.6. Economic Evaluation

The economic viability of the proposed production hydrochlorination facility was investigated. A detailed analysis was not considered necessary since material input and parameter optimisation had not been adequately quantified. It was, however, important that a preliminary economic evaluation be carried out. No matter how comprehensive or sophisticated an investment evaluation may be, uncertainty and risk still remained factors in the evaluation.

Expected Net Present Value (ENPV), Expected Present Value Ratio (EPVR) and Rate of Return (ROR) analysis are methods of including the probabilities of occurrence for costs and revenues directly into an analysis using the expected value approach. By using appropriate time value of money present worth factors to convert costs and profits at different points in time to lump sum values at the start of the project. The expected value analysis approach could be applied to evaluate the economic prudence of the investment in the project.

The expected value was calculated using the equation below :-

$$\text{Expected value} = (p)\ (\text{Income} - \text{Cost}) - (1-p)(\text{Cost}) \qquad \text{.....4.6.1.}$$

where p = probability of project success

Income = revenue generated and

Cost = total capital cost incurred, C_{TC}

Total capital cost is given by the equation :-

$$C_{TC} = C_{FC} + C_{WC} + C_L \qquad \text{.....4.6.2.}$$

From section 4.5. C_{FC} was R120 000 and C_{WC} was approximated to be R80 000. Since the hydrochlorination facility will be incorporated into an existing plant C_L is nil.

Regarding the income of the proposed facility no direct income is accrued. Income may be expressed in terms of interest earned on the reduction of precious metal inventory. The value of this inventory at any give time is R564 million. The incorporation of the hydrochlorination facility into the existing plant can be expected to reduce the monthly inventory by one day. The monthly interest earned is R3,34 million at an annual interest rate of 18 percent.

The project has an initial investment of R200 000 (using equation 4.6.2.) and a 0,3 probability that annual profits of R40,8 million will be realised during the five year life of the facility. Using equation 4.6.1. the ENPV is + R38 million. Since the ENPV is positive the project shows economic viability.

An expected ROR analysis yielded time value of money or interest of 52 percent. This is greater than 18 percent and confirms the ENPV analysis of project economic viability.

The EPVR ratio is + 190 and indicates that the project economics are satisfactory.

4.7. Materials Selection

This section will discuss the materials that were considered for the hydrochlorination reactor unit. A formalized selection procedure (16), introduced in section 2.4.2. was used to quantitatively select the optimum material.

Certain important engineering requirements were identified in the materials selection procedure :-

(1) Porosity

The reactor unit had to be non-porous in view of the toxicity of the reaction gases and the safe containment of the process for material balance purposes.

(2) Temperature Resistance

The hydrochlorination process called for the operation up to temperatures of 1 000 °C. In addition to elevated temperature resistance thermal cycling would be a factor due to the batch operation of the process.

(3) High Temperature Corrosion

This is one of the most important single factors that had to be addressed in the reactor material selection procedure. Oxidative corrosion would normally occur at these given temperatures, however, this phenomenon was exacerbated by the presence of the hydrogen chloride atmosphere as well as any sulphide gaseous reaction products.

(4) Fabrication

It was preferred that the reactor be sourced within this country. The design and standards of frabrication should be within the capabiities of a general engineering works.

(5) Cost

Regarding cost, it was generally found that excessive costs were incurred once the material had to be imported. The cost of the die used in the manufacture of the silicon carbide reactors was high but could be reduced when viewed in terms of multiple production. The cost of stainless steel reactors was comparatively low since they were fabricated from lengths of standard pipe.

(6) Availability/Delivery Time

These two factors, which are often very closely linked, have proved to be an overiding influence in materials selection. Frequently, only materials that could be obtained within given time limitations of the test programme were considered. This was the case with the selection of stainless steel over the more exotic silicon carbides. This situation militated against the use of an exotic or non-standard engineering solution.

The final choice regarding the reactor material was made using the weighted values technique developed by Waterman (16). The various candidate materials and reactor requirements are set out in Table 4.4.

TABLE 4.4. - Formalized Reactor Material Selection Procedure

REACTOR MATERIAL REQUIREMENTS

MATERIALS	POROSITY	TEMP. RESISTANCE	HIGH TEMP. CORROSION	SERVICE LIFE EXPENTANCY	FABRICATION	COST	AVAILABILITY/ DELIVERY TIME	DECISION
Silicon Carbide (nitride bended)	1	4	3	-	3	3	3	17/30 = 0,57
Silicon Carbide (Reaction bended	3	3	1	1	-	2	1	11/30 = 0,37
Silicon Carbide (Classified Manufacture)	4	4	2	1	1	1	1	14/35 = 0,40
Stainless Steel Type 316L	5	3	2	2	4	4	4	24/35 = 0,69
Stainless Steel Type 310	5	4	2	2	4	3	3	23/35 = 0,66
Silica Glass	5	4	5	3	1	1	1	20/35 = 0,57

Legend :- 1 = Very poor or very expensive
2 = Poor
3 = Fair
4 = Good
5 = Very good or acceptable cost.

The performance of the two candidate stainless steels is given in Table 4.4. with decision factors of 0,69 and 0,66 for the Type 316L and 310 respectively. The poorest decision factor, 0,37, was achieved by the reaction bonded silicon carbide. The difference between the decision factors of the two stainless steel types is due to the 30 percent more expensive Type 310. The performance, however, of the Type 310 material is not appreciably better than that of the Type 316L material.

Silica glass, which was successfully used on the laboratory scale apparatus, would be the most suitable material for the hydrochlorination process albeit for some negative characteristics. It is very fragile and brittle. The fabrication on even the pilot scale reactor dimensions was not possible. The cost was expected to be very high since even the laboratory scale silica glass reactor was expensive and in addition the completed unit would have to be imported. The best delivery time was given at eight weeks.

An interesting feature to note at this juncture was the rapid deterioration of silica glass in the presence of lead oxide compounds at elevated temperature. This was due to the formation of lead silicate. Increased levels of lead oxide compounds in the precious metal residues were periodically encountered and could be expected from any future residue feed.

The disappointing high temperature corrosion resistance of the silicon carbide materials was discussed in section 4.1.

The features which made the stainless steels an attractive option was that the material was sourced and fabricated within this country. Delivery times were consequently within one week. Testing downtime was therefore at a minimum.

Failure of the stainless steel reactor did occur only after 40 hours of service. This fact was expected and accounted for. Figure 4.2. shows the failed portion of the stainless steel Type 316L reactor.

FIGURE 4.2. - Failed Portion of the Stainless Steel Type 316L Reactor

It was not possible to weld repair the damaged portion since the corrosion and material degradation was extensive notably in the area corresponding to the hot zone of the furnace.

The cause of failure was ascribed to a deterioration in service due to the aggressive environment of hydrogen chloride and sulphide gases at elevated temperature. The failure mechanism was high temperature corrosion. Extensive surface scaling of the reactor was observed. Rapid scale growth consumed the stainless steel. With the hydrogen chloride gas volatile reaction products were formed which vapourized from the metal surface.

It is unclear to what extent sulfidation occurred. It can be considered an additional failure mechanism since sulphide compounds were present in the precious metal residues. It was very likely that low melting point metal/metal sulphide eutectics were present. The nickel - nickel sulphide and iron - iron sulphide eutectics with melting points of 645 and 985 ^{o}C could be assumed to have been present.

5. CONCLUSIONS AND RECOMMENDATIONS

(1) Stainless steel Types 316L and 310 performed the best under simulated high temperature corrosion tests with corrosion rates of 138 and 224 millimetres per year respectively. Poor performances were achieved by the silicon carbide engineering ceramics.

(2) Thermal conductivities of the tested residue materials were in the region of 0,0001 cal/cm.s. ^{o}C.

(3) Hazard elements were identified on the hydrochlorination process. The early failure, within twenty minutes, of a hydrogen chloride gas regulator and the spillage of this gas were identified as hazards.

(4) Hazard evaluation took the form of an Event Tree Analysis. This was used to quantitatively define the relationship between four expected hazard events, namely :-

- Hydrogen chloride gas supply
- Furnace operation
- Reactor failure
- Toxic exhaust gas emission.

(5) Three failure regimes were observed on the hydrochlorination project.

(6) An exponential costing technique estimated the cost of the proposed production hydrochlorination facility at R120 000.

(7) An economic evaluation was carried out. The Expected Net Present Value over a five year period with a 30 percent probability of successful earnings was + R38 million. The Expected Rate of Return was 52 percent. The Expected Present Value Ratio was +190 indicating satisfactory project economics.

(8) The reactor material was selected using a weighted values quantitative material selection procedure. Stainless steel Types 316L and 310 were selected.

(9) Failure of the stainless steel Type 316L reactor occurred after 40 hours service. The consumable reactor concept was based on its replacement after 40 hours service. The cause of failure was due to a deterioration in service due to the aggressive environment of hydrogen chloride and sulphide gases at elevated temperatures. Failure mechanism was high temperature corrosion with extensive surface scaling.

(10) The most important consideration regarding this project was the selection of a suitable reactor material. The project was able to proceed by the use of stainless steel Types 316L and 310.

/78.....

(11) This project has shown that it would be feasible to commission a safe and profitable hydrochlorination facility. The use of a consumable stainless steel reactor would have to be carefully evaluated with respect to future financial returns from precious metal residues. Such a decision would ultimately be for the decision of the company management.

REFERENCES

(1) **Guidelines for Hazard Evaluation Procedures,** Prepared by Battelle Columbus Division for the Center for Chemical Process Safety of the American Institute of Chemical Engineers, 1985.

(2) McCormick, N.J. **Reliability and Risk Analysis,** New York, Academic Press., Inc., 1981.

(3) Atomic Energy Commission, Reactor Safety Study, Wash - 1400, 1975.

(4) Solomon, C.H. **The Exxon Chemicals Method for Identifying Potential Process Hazards,** I Chem E Loss Prevention Bulletin No. 52, August 1983.

(5) Nielsen, D.S. **Use of Cause Consequence Charts in Practical Systems Analysis,** RISO-M-1743, 1974.

(6) Meister, D. **Human Factors : Theory and Practice,** John Wiley and Sons, New York, N.Y., 1971.

(7) Lees, F.P. **Loss Prevention in the Process Industries,** London : Butterworths, 1980.

(8) **A Guide to Capital Cost Estimating,** 3rd Edition, The Institution of Chemical Engineers, England 1988.

(9) Balfour, R.J. and Papucciyan, T.L. **Capital Cost Estimating for Mineral Processing Plants,** Canadian Mining Journal, June 1972.

(10) de la Mare, R.F, **Manufacturing Systems Economics the Life-Cycle Costs and Benefits of Industrial Assets,** Holt, Rinehart and Winston, 1982, pp 151 - 157.

(11) Lang, H.J. Engineering Approach to Preliminary Cost Estimates, **Chemical Engineering**, Vol. 54, No. 10, 1947, pp 130 - 133.

(12) Hirschmann, W.B. Profit from the Learning Curve, **Harvard Business Review**, January/February 1964.

(13) Montfoort, A.G. and Meiser, F.A. Improved Lang Factor Approach to Capital Cost Estimating, **Process Economics International**, Vol. IV, No. 1, 1983, pp 20 - 21.

(14) Crane, F.A.A. and Charles, J.A. **Selection and Use of Engineering Materials**, London : Butterworths, 1984.

(15) Pick, H.J. **Met. Mater.**, Vol. 2, No. 9, 1968, pp 271.

(16) Waterman, N.A. The selection of Materials, **Engineering Design Guides**, Oxford University Press, 1979.

(17) Sedriks, A.J. Corrosion by Hot Gases and Molten Compounds, **Corrosion of Stainless Steels**, John Wiley and Sons, 1979, pp 232 - 259.

(18) Strafford, K.N. **Metal. Rev.**, Review 138, 1969 pp 153.

(19) Morris, L.A. In : **Handbook of Stainless Steels**, Pecknar, D. and Bernstein, I.M. Eds., McGraw-Hill Book Co., New York, 1977 pp 17 - 1 .

(20) Brown, M.H., Delong, W.B and Auld, J.R. **Ind. Eng. Chem.**, Vol. 17, 1961, pp 191.

(21) Fontana, M.G. and Greene, N.D. **Corrosion Engineering**, McGraw-Hill, 1983, pp 379.

(22) Geiger, G.H. and Poirier, D.R. **Transport Phenomena in Metallurgy**, Addision-Wesley, 1980, pp 189.

(23) Young, M.L. and See. J.B. Effective Thermal Conductivities of Packed Beds of Chromite Ores, **Journal of the South African Institute of Mining and Metallurgy**, December 1976, pp 103.

(24) Oliver, R.E. and McGuire, G. Improvements in and Relating to the Treatment of Material with Hydrogen Chloride, British Patent G.B. 1 509 532, May 1978, pp 3.

(25) Oliver, R.E. and Payne, J.B. Improvements in and Relating to the Refining of Metals, British Patent G.B. 1 502 765, March 1978, pp 5.