

https://dspace.org/

Localising the smart grid based on a South African context: A user centred approach to the micro-grid

Ojurongbe, Oluwademilade Moyosore

2015-04-28
http://hdl.handle.net/10539/17538

Downloaded from a DSpace repository. https://dspace.org/

LOCALISING THE SMART GRID BASED ON A SOUTH AFRICAN CONTEXT: A USER CENTRED APPROACH TO THE MICRO-GRID

Oluwademilade Moyosore Ojurongbe

A dissertation submitted to the Faculty of Engineering and the Built Environment, University of the Witwatersrand, Johannesburg, in fulfilment of the requirements for the degree of Master of Science in Engineering.

Johannesburg, 2015

Declaration

I declare that this dissertation is my own, unaided work, other than where specifically acknowledged. It is being submitted for the degree of Master of Science in Engineering in the University of the Witwatersrand, Johannesburg. It has not been submitted before for any degree or examination in any other university.

Signed this _____ day of _____ 2015

_____

Oluwademilade Moyosore Ojurongbe

Abstract

Implementing a smarter grid for improved management and use of power is extremely important for the future and development of South Africa. Even more important is finding the best way to implement these grids in South Africa. A number of evolutions are expected, but ultimately the eventual solution will need to satisfy the requirements of the grid, while adhering to the relevant standards to result in a suitable solution for South Africa. It can therefore not be assumed that a solution which works successfully in another country will have the same results in South Africa. The economy, financial strength and technological maturity of South Africa are among the factors which are unique and will require an implementation tailored to fit South Africa and these factors. The architecture of the grid gives it structure. This report considers the architecture for implementing the grid in South Africa, employing a view which places more importance on the consumers. An existing architecture, the OPEN meter architecture, is identified and localised based on a South African context, and then validated using existing international frameworks which define characteristics that every grid architecture must have.

To My Family

Acknowledgements

I will firstly like to thank God for making it possible for me to submit this Report. I will also like to show gratitude to my parents for their support and sacrifices for me.
Finally and not least I will like to thank Prof. Ken Nixon, my supervisor, for his guidance and patience with me through this process.

Contents

Declaration ii

Abstract iii

Acknowledgements v

Contents vi

1 Introduction 1

2 Research Approach 5

2.1 Research Question / Hypothesis 5

2.2 Research Methodology 5

3 Background 7

4 Smart Grids and Smart Meters 13

5 The OPEN Meter Architecture 17

5.1 Overview 17

5.2 Components 18

5.3 Interfaces 20

6 User Centred Design 21

7 Localising the Architecture and Framework 24

7.1 Introduction 24

7.2 The Localised Architecture 25

8 Validating the Architecture and Framework 34

8.1 Architectural Goals 34

8.2 The Test for CIM - proves interoperability 39

9 Discussion of Results **41**

10 Future Work **43**

11 Conclusion **44**

References **46**

Chapter 1

Introduction

The ever increasing demand for electricity has raised the need for the efficient use and management of power in South Africa. The energy demands in South Africa are expected to double by 2030 [1]. The need for an urgent solution within the power sector to handle these expected increased demands is imperative. The solution developed will affect the country's developmental growth, irrespective of global and local economic growth [2]. "Attaining existing and more ambitious future energy-efficiency targets will be crucial in the move to a smart and sustainable energy supply without constraining South Africa's economic development. Such a supply must be able to deal with high levels of uncertainty around economic development and be in balance with the planet's boundaries. Fossil fuels and nuclear power cannot fulfil these criteria" [2].

Eskom, the South African electricity utility has ensured reliable power for the next decade through a combination of new coal fire powered stations which go live by the year 2020, along with generating renewable solar and wind energy [2]. It will be important to adequately manage these different power sources. The Smart Grid is one way these power sources could be adequately managed for efficient distribution and use.

Vast amounts of research is being done on Smart Grids. The potential benefits of the Smart Grid are unlimited, and these benefits ripple through from the power sector to other sectors like the country's economy. The solution for the electricity grid will need to satisfy the customers demands, which keep changing, by being reliable and flexible in delivering customer service of a high quality [3]. To do this, as well as effectively manage power usage, the traditional grid will need to evolve into a smarter grid. Eskom understands that with Smart Grids, an architecture able

to meet and cater for the requirements of an intelligent future electricity network is the purpose [3]. The points on the consumers demand and the importance of architecture, raise the need for the research carried out in this report, which focuses on the consumer, and modifies the architecture of the grid, to place focus on the consumer rather than the utility - Eskom.

There are existing deployments of Smart Grids globally, and any implementation in South Africa will need to adopt the best practices from these deployments. A grid deployment exists at Clearwater Mall in Johannesburg, South Africa. This deployment is a Micro-Grid based on Echelon partner PMTs Meteringonline energy management application [4]. It is set up, such that tenants (consumers) only pay for their actual electricity usage rather than paying per square-foot [4]. The tenants who are the consumers here are able to monitor their usage and manage how much they consume. The success of this deployment, further opens up possibilities on the grid, allowing for the grid to be modified to further empower the consumer with even more information and detail on their consumption.

This research report adopts a different view from the traditional grid which focuses more on the utility. The user or consumer becomes more central in the design presented in this report. The grid is adapted based on a South African Context. This modification could be crucial to the success of the grid in South Africa. The evolution of the grid is catered for in this design as future additions are made possible with the design presented in the report. The modifications to the design are made at the structural level of the grid. The design presented, is expected to evolve over time. It still maintains the ability to connect to existing or legacy systems, which may or may not be phased out as it evolves.

This research report is based on the view that a User Centred Micro-Grid will be an ideal solution for the Smart Grid in South Africa. User Centred Micro-Grid will focus on the users, giving them more information and control. This is suitable for South Africa, whose population is getting more and more power usage conscious are beginning to better maintain and control their power consumption and reduce wastage. The pre-paid meters served as the first step, allowing consumers to buy units of electricity to be used.
The smaller scale of the Micro-Grid points to a reduced cost of implementation, and allows for a well spread out incremental deployment. As mentioned, in the South African context description, South Africa is not likely to have the same financial resources for its Smart Grid implementation as other developed countries. The

incremental approach of the Micro-Grid, makes it possible for the municipalities to implement the Micro-Grids to cover their respective distribution regions. They can be developed independently.

Localising the Micro-Grid for South Africa will relatively be easier than the traditional larger Grid. Given the framework presented for understanding Smart Grid system measurements [5], large amounts of data will be collected, and the data stores for a Micro-Grid are on a smaller scale and in turn less complicated/challenging to implement.
The framework which is broken down into layers, makes provision for the collection, transformation, processing and application of the data. This framework supports the User Centred Micro-Grid, collecting processing and presenting the information to the users. The Human Interface Layer (HMI), is interconnected with the display devices which are provided for in the User Centred Micro-Grid. This framework for data compliments the User Centred Micro-Grid, enabling user monitoring and user control of power usage by collecting the right measurements and providing the right information at the right time.

The Micro-Grid is able to support the required Smart Meter functionality that is required for the South African market by Eskom [6], which includes the meter functionality, installation and maintenance, communication, display and interfaces among others. These functions depend on the grid, communication and data storage are two of the functions in which the architecture features heavily by providing adequate data store and its interoperability, which permits integration and communication along the architecture.

Modifications to the structure of the grid, are made to the architecture. The adaptation of the OPEN meter architecture is necessary to cater for:

- The size of the grid. The architecture is adapted to the Micro-Grid, a smaller implementation of the traditional grid;
- The data flow and control. The architecture will need to be adapted to cater for the changes in data flow, which are based on the user centred view;
- The component roles. The roles of key components will be adjusted for the user centred view and to match the characteristics of the South African market, including the set up between the regional distributors and the main utility.

- Application interoperability. The interoperability of the applications on the grid is vital. A standard based information model is proposed for the interfaces, which is proven to guarantee interoperability.

These points are further discussed in section 7, which deals with the adaptation of the OPEN meter architecture for the proposed user centred grid architecture.

Section 2 of this report states the Research approach and question. Section 3 presents the detailed background. Section 4 provides an overview of Smart Grids and Smart Meters. Section 5 discusses the OPEN meter architecture. Section 6 of the report presents user centred Design, while Section 7 is the localisation of the architecture and framework. The architecture and framework are validated in Section 8 of the report and the Results are discussed in Section 9. Section 10 is on the Future work and the report ends with the Conclusion, Section 11.

The following chapter states the research approach, question and methodology. It clearly defines how the research was conducted.

Chapter 2

Research Approach

2.1 Research Question / Hypothesis

The localisation of the Smart Grid based on a South African Context, A user centred approach on the Micro-Grid.
This research report localises the grid by modifying the architecture of the grid to cater for the characteristics of the South African environment. The user centred view is applied to the Micro-Grid architecture to develop a structural base to build on in developing a grid solution for South Africa. An increased focus is placed on the user, applying the user centred view to the Micro-Grid creates an alternative perspective for the grid implementation.

2.2 Research Methodology

The methodology adopted in this report is:

1. Evaluate the OPEN meter architecture, an existing architecture for the grid, identifying the key characteristics necessary for the localisation;
2. Adapt the architecture towards the South African context, by redefining the roles of key components in the architecture;
3. Validating the architecture based on the NIST framework, an existing architecture roadmap and framework.

The following chapter provides a detailed background on the Smart Grid and related technologies as well as a background on user centred design.

Chapter 3

Background

Smart grid technology is an emerging technology, not only in developed countries, but in developing countries like South Africa. The grid has boundless potential to not only improve, but change the power sector. The benefits of implementing the Smart Grid are countless and the economic benefits are some of the major reasons for this shift from current technologies and distribution technologies to the more effective Smart Grid [7]. A detailed assessment of these benefits of implementing the Smart Grid was done by Easton [7]. The financial savings and benefits, benefits to secondary industries and job creation are but a few of the benefits that are identified and detailed in Easton's report [7].

Grid technology has certain similarities to Cloud computing, another emerging technology that possesses potential to be a game changer. The common ground between the two technologies covers a vast range [8]. The most important point however, is that the cloud enables the Smart Grid and even improves its usability and performance [8]. Vast amounts of research is being conducted in different areas of the grid, and some major technology companies are beginning to participate, especially in Africa [9]. Eskom has already taken steps in deploying a Smart Grid model, though at this stage the grid deployed is a hybrid model that supports the current legacy system while still introducing smart demand side management and renewable energy generation capacity [10].

Replicating successful deployments from developed countries here in South Africa and other developing countries will need to be tailored for the respective countries based on the unique factors to be more effective. These factors are what make up the South African context.
These factors include but are not limited to the South African economy, financial

strength, existing infrastructure, condition of the South African power utility and the South African public / consumers. These factors drive the need for the grid to be adapted to South Africa.

South Africa classifies as an developing economy and differs from other nations, most notably the more developed nations. Likewise the South African context is different from the situation in these nations with successful deployments which are used as reference points. The United States and United kingdom are among the developed countries with more mature deployments of the Smart Grid.

Eskom generates, transmits and distributes power in South Africa. Some key facts about Eskom, which contribute to the South African context include:

- Generates approximately 95
- Distributes to end users as well as other distributors - including municipalities
- Greater than 4.7 million customers
- 27 power stations

Considering these infrastructure facts as well as the above mentioned factors highlights the need for adopting a method of deployment to fit South Africa, thereby further supporting the the view of this research report. The size of the power grid, as well as the understandably lower financial budget of an emerging economy like South Africa support the choice of a Micro-Grid approach as opposed to the larger traditional grid.

This creates the need to localise the Smart Grid based on the South African context, altering certain aspects of the grid model to find the best fit. This research report presents one possible way to answer the question of how to localise the Smart Grid in this context, implementing a User Centred Micro-Grid.

Further evidence to the difference in context and factors between South Africa and other countries are the utility and customer challenges [6].The more developed countries tend to have more players involved in the development of deployment solutions which then means more resources are invested into obtaining the deployment solutions. Field installations, customer interaction and marketing are some of the challenges faced in South African deployments [6]. These are clearly described in the

dissertation investigating the value proposition of advanced metering infrastructure in South Africa [6] and form a part of the South African context.

Advanced metering infrastructure (AMI), forms a major part of the grid. AMI is focused on communication between the utility and consumers [9]. The solution developed for the South African context will take into account the AMI standard in South Africa. The South African AMI standard is NRS049.

The User Centred approach will be based on user centred design (UCD).“ UCD is an approach to design that grounds the process in information about the people who will use the product” [11]. In this case the focus will be on the consumers / customers in households who will be using the services on the grid. Furthermore, the processes involved in UCD are designed place importance on the users, involving them through the different stages like planning as well as design [11]. Adopting UCD methodology in the design of the Smart Grid will mean that the Smart Grid model will be designed solely around the users. The model gives more control and power to the consumer. Different from this is the more common model of the Grid, where the design is focused around the utility. This does not suggest that the current model which has been successfully deployed in various countries is inadequate, but rather to present a UCD model of the grid for South Africa.

The User Centred Micro-Grid, as the name suggests, is with respect to the traditional grid implementation, smaller in size and will draw from the work done, adopting an incremental approach as has been selected for use in South Africa [12]. This incremental approach will correspond to the evolutions of the grid.

A Micro-Grid is defined as “a modern, small-scale version of the centralized electricity system, built to achieve specific local goals such as reliability, carbon emission reduction, diversification of energy resources, and cost reduction” [13]. A goal of the proposed Micro-Grid will be to incorporate user centred design. The size of the grid makes the local goal of increased user importance achievable. The local goals of the grid are linked to the characteristics which are to be satisfied from the localisation of the grid. Reliability, a local goal, is linked to success of the localisation of the grid. The architecture presented will not be reliable if the localisation is not valid. Smart Micro-Grids are ideal to combine renewable resources at the user level and allow for user/consumer participation in the electricity enterprise [13]. The consumer participation is enhanced and improved with the user centred model. Micro-Grids could be said “to form the building blocks of the Perfect Power System”

[13]. The interoperability between connecting Micro-Grids; the components of each Micro-Grid itself; and the applications which are found on these grid components; is important for the success of the grid. This report is focused on a single Micro-Grid and the architecture considered is limited to this. The interoperability between the components on the Micro-Grid and the applications on the grid components will be considered.

Interoperability is defined as "the capability of two or more networks, systems, devices, applications or components to interwork, and to exchange and readily use information, securely, effectively and with little or no inconvenience to the user" [14]. The definition alone clearly shows the importance of this characteristic and why it has to be maintained during grids evolution to ensure the grid is effective and fulfils its purpose. Interoperability is achieved through interfaces [13]. The Smart Grid, being a large and complex system, requires different layers of interoperability. The use of the *high level categorization* developed by the GridWise Architectural Council (GWAC) [14] will be employed in this research. Interoperability of Smart Grid is achieved through the architecture of the grid. The framework, referred to as the GWAC stack [15], is an incremental framework. This means that each level enables the level above it, with the above layers depending on the layers below them. With increased complexity of the functions and capabilities, expected results are derived from the interoperation between the stack levels [15].

The architecture of a system is defined as "the fundamental concepts or properties of a system in its environment embodied in its elements, relationships, and in the principles of its design and evolution" [16]. The architecture of a system could be said to give the system its structure. This structure defines how the system will be set up, how the components of the system will interact. The architecture of any system, including the grid, is important. Interoperability, which is equally important, will directly affect the efficiency of the system. Two or more components of the system are interoperable, if they can cooperatively perform a particular function through the information they exchange [17]. Architecture framework refers to the "conventions, principles and practices for the description of architectures established within a specific domain of application and/or community of stakeholders" [16].

The framework is used to adapt the architecture to a particular situation. To localise a system, the structure of the system may or may not be modified. Modifications to the structure of the system are effected or implemented through its architecture. These modifications are captured in the framework which is developed for a

particular domain of application. The architecture in this report is focused on a specific South African context based customer domain, placing more emphasis on the use cases of the customer. The framework and the architecture follow their respective processes when being developed. This process of adapting the grid is the localisation of the grid, and the grid will be expected to evolve and improve with further developments and additions.

The South African context, comprises of the characteristics and factors that will directly or indirectly affect the deployment or planned deployment and implementation of the grid in South Africa. These then result in the scenarios that we have in South Africa. Factors include, but are not limited to the South African economy; The power utility set up; Education and skill set; geographical locations and environmental challenges. These factors correspond to the challenges faced by emerging economies.

Considering these, we then have a specific scenario for the South African context, and the localization based on the South African context tackles these factors. This justifies the approach being adopted, the User Centred Micro-Grid and simultaneously provides a walk through simulation of the localized architecture in the scenario of the South African context.

In South Africa, the generation of electricity is donce by Eskom, who then transmit to the municipalities, and they then distribute the electricity. Pre paid meters are being used in customer homes which increases efficient power usage. Deployments of grid infrastructure faces environmental challenges like ants building hills in substations and bad installations [6]. The environmental and skill set challenges can be overcome by better planning to deal with the environmental conditions and focused training to build up the skill set.

The proposed User Centred Micro-Grid presents a more suitable fit for the relationship between the players in the power utility set up. that is between Eskom and the Municipalities. Each of the municipalities or distribution region can then be set up to be an implementation of a Micro-Grid. This allows each one of these to focus on a specific area, fits is with the reduced scale and concentrates on the core functionality and implementation necessary to provide the users with the necessary information at the right time to enable them manage their electricity usage. The network of these Micro-Grids will make up the larger grid, which will then be maintained by Eskom. Eskom will be responsible for the communication between the numerous Micro-

Girds on the network and other overseeing responsibilities. This approach means that the deployments of the Micro-Grids can be staggered and done incrementally, each deployment learning from the previous one, while being deployed to integrate with the existing ones before it. Financially, the breakdown in deployments will be easier to manage and more affordable, compared to an attempt to finance an installation of a single large Smart Grid for the nation.

The implementation of the pre-paid meters has had a positive effect on the effective use of electricity, with users being more aware of their spend and usage. This was highlighted by Eskom as one of its drivers for wanting to a smarter grid than the existing one. Taking this further and adopting the User Centred Micro-Grid, builds on the success of the pre paid meters and affords the users more information and control to be able to better manage their electricity usage.

The implementation and maintenance skills would be more easily gained with training on the smaller scaled Micro-Grid with specific features which make is User Centred as well as user friendly. The data store question is another one which is assisted by the reduced scale of the grid. The data store is still catered for without a drop in quality of the solution but slightly easier as the store for each Micro-Grid will be smaller in capacity than the larger traditional Smart Grid. Also with each Micro-grid being afforded the focus from the responsible distributor, these data stores are guaranteed to be properly maintained and optimised. The measurements taken are however expected to be as frequent as in the larger Smart Grid and will collect as much information if not more. The directed focus of the Micro-Grids means that more specific information can be collected and processed for specific analysis and improvements.

The following chapter discusses the Smart Grid in more detail, highlighting the key aspects that are relevant to this research report.

Chapter 4

Smart Grids and Smart Meters

A common view shared among organizations is that the Smart Grid is an evolution of the standard electricity grid to a more digital grid as a result of technology advances in information and communication [18]. The Energy Independence and Security Act of 2007 (EISA) in America, describes distinguishing characteristics of the Smart Grid to include [15]:

- Making the electricity grid more reliable, secure and efficient by increasing the use of digital information and controls technology:
- Dynamically optimizing the electricity grid's operations and resources, using cyber security;
- Developing and integrating distributed and renewable resources and generation;
- Deploying and incorporating demand responses, demand-side and energy efficient resources
- Deploying 'smart' technology for meters, communication for grid operations and status and automation of distribution;
- Integrating 'smart' appliances and end user devices;
- Providing consumers infotmation at the right time and options to control their usage; and
- Developing standards for communicating and interoperating appliances and equipment interacting with the grid, including it's infrastructure.

The Smart Grid is an improvement on the current grid / electrical network. Each of the grids characteristics has its benefits. The South African Smart Grid Initiative (SASGI), defines "a vision to revolutionise the South African electricity system by 2030, by integrating 21st century technologies to achieve seamless generation, delivery and end-use that is effective and efficient, flexible, scalable and adaptable and benefits the South African nation" [19]. Successfully implementing the grid in South Africa goes a long way in making the vision a reality, while fulfilling the characteristics of the grid as defined. Implementing the proposed Micro-Grid architecture in this report not only works towards attaining the vision, but prioritises benefiting the South African nation and public, which are the consumers. This is achieved by focusing slightly more on the characteristic of the grid which is the provision to customers of timely information and control options. This SASGI vision rightly suggests that the Smart Grid will be integrated into the current network. One of these technologies is smart metering.

Smart meters are innovative, tracking energy consumption in greater detail and in real time [20]. The Smart / electric meters are an important component in the grid architecture. The meters are used to collect readings from within the consumers premises. These meters are able to provide limited records for the consumer to view. Energy consumers need smart metering for a number of reasons including: a user profile; Efficient energy management; Benchmarking; Management; Energy cost allocation and analysis; and Fault analysis [21]. All these are achieved from the manipulation and representation of the readings which are collected from the consumer's premises. Smart metering provides logged data of different user groups with specific logging intervals and the profile can be obtained to analyse the user pattern such as turn on/off time of lighting and power [21]. This profile can then be used to trace possible energy wastage to the particular appliance, like a TV set which has been left on standby. The smart meters can be used to benchmark by comparing profiles of the same type from different locations. The differences can be examined to determine points of wastage.

Advanced Metering Infrastructure (AMI) is " an integrated system of smart meters, communications networks, and data management systems that enables two-way communication between utilities and customers. Customer systems include in-home displays, home area networks, energy management systems, and other customer-side-of-the-meter equipment that enable Smart Grid functions in homes, offices, and factories" [22]. The customer systems are external to the smart meters, and the architecture of the grid must be able to cater for both the smart meters as

well as the customer systems. The Advanced Metering Infrastructure primarily focuses on utilities, with monitoring power usage in real time [15]. The various designs that exist for AMI's able to implement residual responses, and include pricing dynamically. AMI not only has both the hardwar and software for communication but the software for related systems, resulting in a 2-way network between the advanced meters and the utility systems [15]. This communication is dependent on the integration and interoperability between the hardware and software components that will be communicating.

The architecture of the grid is its basic structure. Architectural decision are therefore important and will affect its capabilities like interoperability which are essential for the architecture to be successful. The architecture of the grid has to satisfy the different layers of interoperability.

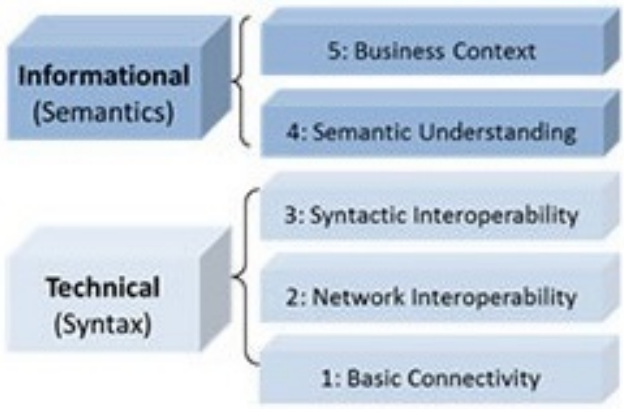

Figure 4.1: The Syntax and Semantic Drivers with corresponding Interoperability Layers, adapted from the Grid Wise Architectural Council's cross-section of the necessary levels of interoperation on the Smart Grid

The relevant levels of the GWAC stack, shown in Figure 4.1, are the 5 layers which make up the subsection of interoperation required for grid interactions [14]. The lower layers cover simple functionality, the top levels cover interoperability at the business level, while applications and protocols are generally in the middle [14]. The interoperability discussed in this report of the proposed Micro-Grid architecture is focused on the two lower level drivers which are for syntax and semantics and comprise of the first five interoperability layers.

The version of the Smart Grid presented in this report is a Micro-grid. Defined as a smaller version of the grid, the Micro-Grid offers a number of advantages that

can be used to tailor it for the scenarios in the South African context, thereby localising it. It is smaller in size, allowing for focus on the prioritised areas of the grid. The size implies that it is a more cost effective implementation as it covers a smaller geographical area. Micro-Grids have the same characteristics as a normal grid and hence the same vision and targets can be applied to the Micro-Grid. The goals of the grid can be married to the characteristics fulfilled in localising the grid. The Micro-Grid has the ability to be implemented in stages, undergoing evolutions of improvements. The framework specifies not only the architecture but other principles and practices that are to be applied on the architecture in particular situations. User centred design will be applied as a practice while the standards used will be the principles applied to the grid.

The next chapter goes on to discuss the key aspects of the architecture, the OPEN meter, which is being considered in this report.

Chapter 5

The OPEN Meter Architecture

5.1 Overview

The OPEN meter project defines the European version of a standardized smart metering solution [17]. The architecture identifies components, and the interfaces that connect the components.

The architecture, a reference framework identifies the necessary requirements, used as a guideline in developing infrastructure for advanced multi-metering [17]. The proposed OPEN meter architecture is prepared for expected evolutions in the future, as well as grid distribution control, by using the concentrator , and is valid for a whole range of scenarios and may be customised considering national regulations [17]. These characteristics make the OPEN meter architecture ideal for adaptation to the user centred grid. It meets the NIST architectural goals for Smart Grid architecture.

The aim of the OPEN meter project is to identify possible multi-utility smart metering solutions for various utilities [17].

The components of the architecture which are initially based on the larger utility focused grid. The Micro-grid is but a traditional grid on a smaller scale and this means that adopting the architecture for the Micro-grid is possible. The functions of the components on the grid will then be adopted to the Micro-grid and to reflect the flow of data in the Micro-grid which is more focused on the user and provides more information for the user. Data storage is considered with the architecture and initially the data storage on the OPEN Meter architecture is suited to the larger scale grid which would not be as ideal for South Africa. The User Centred Micro-

grid is more suited for these characteristics as with its reduced scale can be more flexible and deployed more easily.
The OPEN Meter architecture will need to be compatible with the existing South African AMI standard.

5.2 Components

Figure 5.1 shows the components in the OPEN meter architecture and how these components connect. The electric meter, end customer devices, concentrator and central system are the components of the architecture which are important for this report. The other components include the external devices, Legacy systems and Local Operation and Maintenance (O & M) devices.

The electric meter, a smart meter is the hub of communication. The meters main function is to record the consumption of electricity on the premises. It tends to serve as a communication hub for other devices on the network, and in doing so increases its processing abilities, memory and communication storage, and data transmission incorporates additional processing capabilities, memory and communication means for storage, and transmission of data [17]. The main purpose of the meter is to facilitate accurately the transfer of data between the AMI and the in home network [17]. The data transfer and communication between the components is facilitated through the interfaces. An example of an in-home network device is a home display unit. This display unit is where the consumer is able to interact with the electric system.
The electric meter is able to operate either as a proxy gateway or as a gateway, the main difference being that the proxy gateway stores collected data and the gateway does not store this data.

The electric meter is managed through the concentrator. The concentrator serves as a middle man between the electric meter and the central system [17]. This central system is controlled and managed by the regional distributor. The concentrator, which is controlled by the central system, gathers information from the meter and devices on the consumers premises. The concentrator, like the electric meter is able to act as a proxy gateway for the meters. The concentrator has interfaces for communicating with internal devices as well as interfaces for external devices.

The central system manages all smart metering data [17]. Through communication

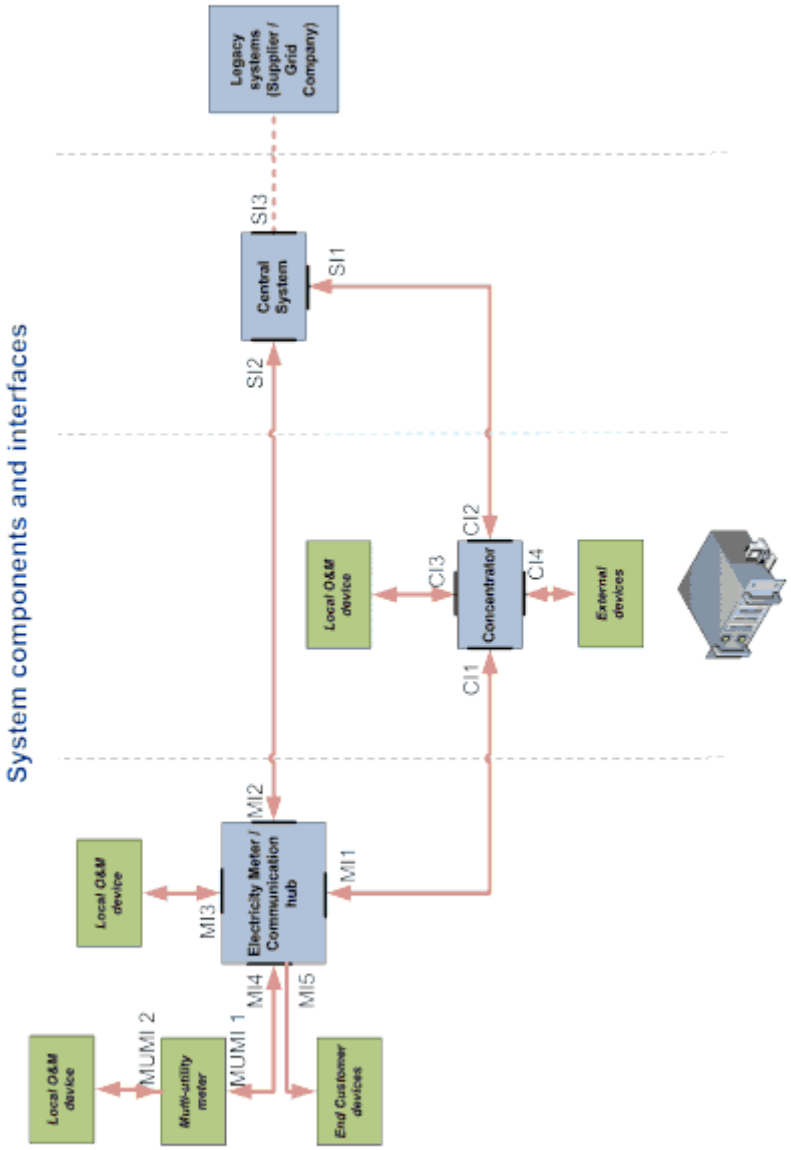

Figure 5.1: OPEN meter System Architecture [17]

which goes via the interfaces, the central system configures and controls all the system components. The central system communicates with Legacy systems. It receives requests from the from the Legacy systems which are to be accomplished on the network. The central system is then able to delegate to other components depending on the nature of the request.
End user devices allow the consumer interaction with the electric meters [17]. These devices are optional and are independent, not affecting the Advanced Metering Infrastructure system. These end user devices are used to inform and influence the consumers behaviour.
The external devices are optional devices that may be included to improve the efficiency of the system.

5.3 Interfaces

The components make up the architecture, but will not be able to communicate without the interfaces between them. These interfaces allow for the transmission of data between components, and in some cases, the data needs to be translated. The interfaces are vital because they ensure interoperability. Interoperability of a system refers to the ease at which the components are able to not only interconnect, but to successfully exchange data. The interoperability affects the architecture and a system cannot be successful without making provisions for interoperability.

The interfaces in the OPEN meter architecture are standardised interfaces which have been and are still undergoing tests which validate them. Each of these interfaces connects two components and facilitates communication between these components. The interfaces between the Concentrator and the Central system, as well as the Electric meter and the Central system handle wide-area communications. The interfaces between the other components handle local communications, and most of these interfaces in the OPEN meter architecture utilize wireless technology [17].

The next chapter discussed user centred design in more detail, and explains how this can be used to adapt the Smart Grid.

Chapter 6

User Centred Design

User information is an important part of a successful design. UCD focuses more on the user of the system which is being developed, and increases usability of the system. Focusing more on the user implies that the user is involved more in the process of development through requirements gathering and various iterations of testing. An international standard exists which serves as the basis for UCD methodologies, the standard is "ISO 13407 - Human centred design process" [12]. The standard details how to include human centred activities in a development cycle [12].

From the perspective of the grid, this suggests that the chosen deployment in South Africa will be focused around the consumers, by involving the users more and incorporating this methodology in the design methodology of the grid. In establishing the traditional grid, the main requirements focus on the utility and the management and distribution of electricity. Incorporating UCD will ensure that the consumers use cases are considered priority and every iteration or deployment is thoroughly tested for usability.

The model specified in the standard has main four activities [12]:

1. **Specify the Context of Use**: Identify users, their reasons for use and how it will be used. This activity identifies the stakeholders, and highlights the customers as the main users. The users will interact with the grid via the end user devices to manage their energy usage and costs. The conditions for use of the grid will be based on the characteristics of the South African context.
2. **Specify requirements**: Identify the requirements which are a minimum for success. The user goals for the grid will include enabling the user to effectively manage and control energy consumption. This will hinge on the quality of

the information provided to the user by the grid. This information will be processed from the data collected.

3. **Create design solutions**: Developing a concept to a completed design could be done in stages. This report forms part of this activity. The proposed design, which is based on the context of use and the goals of the system is still in its early stages and needs more work to be complete.

4. **Evaluate designs**: Evaluation, an important part of the process is done through usability testing. This is an integral part of the process. This report presents the architecture of the proposed design and hence the evaluation process differs slightly. The architecture is validated.

Typically, User Centered Design methodologies based on the model have four phases [12]: *Analysis; Design; Implementation; and Deployment.* Each of these phases has a usability testing activity.
This model and methodology strongly support the view of a grid which empowers the consumer. The usability testing in any of the design phases will not be successful without all the user requirements at that phase being satisfied. The design phase of the methodology will involve designing the interaction the consumer will have with the electrical system.

There are various methods that exist for UCD, these include [23]:

- Field studies: This places teams in user environments, here they are able to observe critical details of the environments. For the grid, this will mean that the design team will need to visit the consumers premises. Doing this will enable the design team to better understand the consumers use cases and the information and interaction the consumer will need with the electric system for it to be beneficial and effective;

- Requirements analysis: This ensures designers include the "whole-of-life'needs for the system in the stake holderes perspective. The process results in a list of priduction design system requirements [23]. All the stakeholders of the grid will be considered, with priority to the user / consumer's requirements. Executed properly the requirements analysis results in a comprehensive set of requirements to progress with;

- Iterative User Interface Design: Usability is improved when user testing results are considered in user design. Iterating through atleast three versions of the

interface is recommended [23]. In the user centred view for the grid, the user interface will be vital, and the design team will need the iterations to determine what is needed and what is not needed on the consumers user interface; and

- Usability Evaluation: Identifying user problems, when using a software product for tasks are captured andneeded for user centred evaluations along with identifying users and tasks [23]. The usability evaluation on the system will involve the user interface primarily. It will identify challenges that arise from the consumers interacting with the system through the interface and fixed can be developed. The user experience and the benefits of the user system can be expected to be identified here.

The process of applying UCD to the grid will be in phases as described in the design, and these phases are connected to the activities of the process. Applying UCD to the grid results in the proposed user centred Micro-Grid architecture, which is validated. This design promotes the principles of a user centred system presented as an alternative view to implementing the grid.

The next chapter discusses the localisation of the architecture with user centred design for the Micro-Grid. The result is the proposed architecture.

Chapter 7

Localising the Architecture and Framework

7.1 Introduction

Software localisation means the "translation of a software interface and messages to another language with additional formats and adaptation to local cultures" [24]. Localisation is defined as "the process of adapting an international product to a specific language, script, cultural and coded character set environment". In localisation, the same semantics are preserved while the syntax may be changed [24]. This means that the main aim of the system being localized does not change, but the way in which it is constructed or used may change. This report discusses the localisation of the grid based on the South African context, the semantics of the OPEN meter architecture is unchanged, however the syntax is slightly altered.

This localisation is achieved by applying UCD to the Micro-Grid to satisfy the characteristics based on the South African Context. A micro grid is being used as it offers a more realistic way of implementing the grid in developing countries, due to financial and cultural reasons among others. South Africa is one of such developing countries.

The components in the architecture are the adapted OPEN meter components, with the roles of the components being changed in some areas. The role of each component in the User Centred Micro-Grid will be explained in this chapter. The interfaces are another important part of the architecture as they ensure integration and interoperability. These interfaces are developed to standards. It is these standards

that enable integration and interoperability of the architecture and the proposed system. The architecture, much like the OPEN meter architecture which it evolves from, can be used as a framework for identifying and specifying the requirements of an advanced multi-metering infrastructure.

The integration and interoperability of the architecture are important requirements for the large amount of data to be collected and transmitted over the grid. The Common Information Model (CIM), which consists of the International Electrotechnical Commission (IEC) series of standards 61968 and 61970 is employed in the design of the architecture to ensure integration and interoperability. The standards have emerged to be critical to the Smart Grid [25], and Eskom, the South African utility expects these standards to play an important role in grid deployments in South Africa.

7.2 The Localised Architecture

The modifications to the architecture are considered at an early stage of development as they have effects within the foundation of any implemented design as is seen with the architecture. The adapted architecture and the models based on the South African context with the respective stakeholders becomes the framework. The framework ties together these ideas to produce a grid solution for South Africa.

The changes to the architecture which localise are shown in Figure 7.1 and given in the table below:

Table 7.1: Summary of localisation changes for key components

Component	OPEN meter role	Proposed architecture role
Electric Meter	Proxy or Gateway	Proxy; needs to store information to provide real time analysis to the consumer, It processes data. Provides a level of control to the consumer, via the home display unit.
Home Display unit (End User Device)	Not Specified	Interaction point between the consumer and the grid system. Information is displayed here, and the user is able to manage electricity usage by switching on and off appliances and phases.
Concentrator (at the transformer)	Proxy or Gateway	Proxy; It will process data for its immediate geographical or allocated area. Information here is made available to the consumer and the central system for management.
Central System	Full control	Less control than in the OPEN meter architecture. This will be afforded to the consumer for their management. Mainly oversees and manages distribution based on processed data. Communicates with the Utility's system, but also with the electric meters relaying messages to the user.

The components in the architecture will not necessarily be altered, but the roles they play will be. The electric meter, still sits in the household, and will be connected to the other meters in the house, the end user device and the concentrator located at the

transformer. Figure 7.1 shows how the components sit in the proposed architecture. The electric meter will be the first point of data collection. The decisions on what data to be collected and how often is an area still under discussion, but the frequency of the readings will undoubtedly increase roughly from a per minute or per hour rate to a per second rating or even more. The electric meter in the User Centred view, which is to empower the user, will act as a proxy gateway. It will not only receive data and transmit it, but it will store it. It will store minimal amounts of data that is needed for the processing and presentation to the user. In the User Centred grid, presenting the data to the user is given increased priority. This implies that the data is used at this level while it is also sent up towards the Concentrator and the Central system. The data stored here is not large, as it is only from one household. However with the measurements being taken more often, the amount of data is still expected to be large, quantified as big data and measurements expected to be over 100 million gigs a day (approx). The information is presented to the user through an end user device also called the home display unit. This device gives the consumer ability to interact with the system. The consumer is also able to see the usage by appliance and identify wastage. The consumer will in future evolutions be able to control the usage from their end user device. This means that the consumer can use the device to switch on or off certain appliances on the premises.

The electric meter transmits the collected data to the concentrator, which sits at the transformer. The concentrator acts as a gateway in this adapted implementation. The concentrator communicates with the electric meter on the premises, the central system and external devices that may be needed during installation or physical manual configuration. The regional distributor will control these concentrators, with more than one concentrator expected per Central system. The regional distributors are mainly responsible for distributing electricity within their regions, however Eskom also has clients which it transmits to. These distributors are also responsible for also maintaining equipment in their regions [29], and will therefore be responsible for maintaining their own Micro-Grids. Data is transmitted to the distributors via the concentrators from the households in their region, and hence the distributors will have region specific information which they can also use to effectively manage distribution. Each of these regions will contain numerous concentrators which will be proxies for an even smaller area, the same area covered by the transformer to which it is attached. The distributors are able to compare profiles of households, neighbourhoods and even larger areas to provide a benchmark and also to attempt to eradicate wastage. Unlike with a traditional grid, this Micro-Grid set up means that the grid is smaller and focused on a smaller area than the traditional grid will

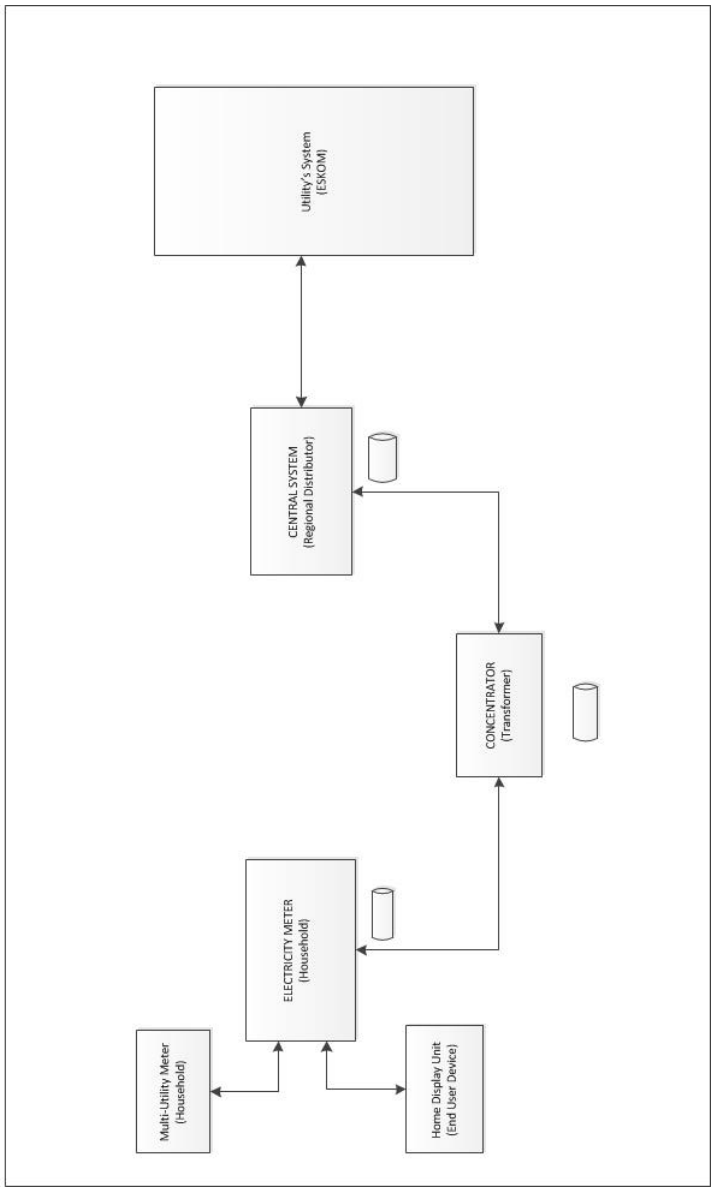

Figure 7.1: The Proposed Architecture Showing Key Components

be. For example, in South Africa, a traditional grid could be a nationwide grid while the Micro-Grid would be implemented for the city of Cape Town or Johannesburg, both of which are regional distributors.

The central system is still able to oversee or monitor the energy usage and management, but has less control as a result of the user gaining more control for energy management. However, the central system will be able to communicate to the electric meter, to send messages to the user based on the data it analyses. For example the a message could be sent from the central system to the electric meter which will then be displayed on the home display unit for the consumer to see, and could be a warning about usage or request to switch of certain appliances and so on. On a larger scale, the retrieved data does get sent up to Eskom from the regional distributor's central system. The central system similarly to the concentrator is then able to utilize this information for better energy management. The central system like in the OPEN meter architecture is able to receive messages from the legacy systems, which need to be executed in the grid. However in this localised view the first option is to pass this message with instructions on to the concentrators to execute. The central system still de-couples the legacy system and the devices in the field. The Micro-Grid approach reduces the size and scope of the grid, allowing for focus to be placed on the users and the distributors. The shift to the Micro-Grid allows the Central system to be implemented at the regional distributor rather than at a higher level at Eskom, and focuses on a smaller geographical area.
The concentrator could alternatively act as a gateway. Here the concentrator does not store data, but it rather allows access to the data to the central system.

The end user devices on the consumers premises could be any third party device. However critical to the user centred design is the display which the consumer uses to interact with the system. The data to be presented to the consumer is sent to this end user device. The consumer is able to view the collected and processed data on their electricity usage and to identify wastage. Communications from the concentrator level and the central system can also be displayed here. In a case where the distributor wishes to take a certain action on the consumers premises, the consumer initially receives the message on their display before any action is taken. An interval will be defined depending on the severity of the request as to how long the distributor or Eskom themselves will be delayed before being allowed to perform an activity or request. The end user device also allows the consumer to activate / de-activate or switch on and off appliances or phases on the premises.

The Legacy systems, play the same role as in the OPEN meter architecture. They are independent from the grid, but are able to communicate with the grid through the Central system, as depicted in Figure 7.1. However with the localised grid, the Legacy systems here will be any systems which the distributors may be currently using for energy management. The main utility, Eskom which also has its own systems which it uses, will be connected to the system at a higher level where these central systems from the municipalities are connected. Here the identification of responsibilities will be vital in ensuring that there is no overlap. The utility will have less responsibility and control compared to the regional distributor.

The Local Operation and Maintenance (O & M) devices will maintain the same roles of the devices in the OPEN meter architecture. The O & M devices are used for configuration and maintenance, and in this localized architecture, where large amounts of data will be transmitted and stored, in situations where a physical connection is required to retrieve data from any of the data stores, the devices will connect through the respective components to reach the desired data.

Multi-utility meters are expected to maintain the roles from the OPEN meter architecture. These meters measure other utility services and connect and communicate to the grid through the Electric meter. The electric meter serves as a hub and a proxy for these multi-utility meters by storing data that is collected from the multi-utility meters and also allowing limited access to these meters for the concentrator when necessary.

The necessity of data stores in the system is vital. Data collected from households will be measured frequently, and for each household this means large amounts of data are going to be generated. The data needs to be effectively managed to ensure the right data is made available at the right time. The question over what data should be measured is also being considered. To extract useful information from measured data, the right measurements must be taken. All the transmission and translation of the data is carried out through the interfaces.

The OPEN meter architecture has specified inter-component interfaces. These interfaces are shown in Figure 5.1, the OPEN meter architecture. Most of the interfaces use wireless technology, and the data model chosen is the COSEM data model. COSEM, Companion Specification for Energy Metering is a data communication model based on the client server paradigm, where the meter equipment plays the server role [27]. It is important to note that the component interfaces

ensure interconnectivity and the application interfaces are for interoperability. These component interfaces adhere to the necessary standards like the IEC 61334-5-1 [12]. More on these interfaces and the standards can be found in the OPEN meter Architecture Document [12].

The interfaces in the OPEN meter have to be adapted to adhere to the chosen standard, 61968-1 in particular. This standard describes the architecture of interfaces, which is built to the core of Smart Grid architectural principles [25]. The Common Information Model (CIM) is applied to the interfaces as well as the data in the being transferred within the system, on the application level. Interconnectivity is still ensured through the component interfaces which utilize the COSEM data model.

The CIM standard, 61968 is appropriate for the user centred view, because it concerned with Demand Side Management (DSM) which is where the consumer is also mainly involved. The other standard in the CIM group of standards, 61970 is more focused on the Energy side management which can be likened to being more focused on the utility side of things.

The integration involves both the components, as well as the applications on these components. CIM has a layered architecture which ensures implementation of standard methodology at different layers. Both the information and context layers are semantic with the defined rules for translation to the implementable physical syntax [25]. It prevents the need for a universal database by allowing for bridging and extensions [25].

The semantic definition of an interface provides for a conceptual understanding of exchanged information and the semantic definition consists of the CIM extensions and the bridge. This allows for loose coupling and the interoperating parts are able to interoperate without elaborate pre-arrangements [25]. CIM is used to create a CIM profile for applications, meeting the requirements of the application.CIM compliant integration implies interfaces that adhere to the standard. This provides for minimal knowledge to be included in the message that is passes across the interfaces, and this enhances composition [25]. Enhancing composition makes the architecture evolution friendly as additions can be made as the architecture and the grid evolve.

The CIM interfaces will be applied between the applications which will be on the system to be used in addition to the component interfaces which already exist on the system architecture. The interfaces between the components are component

interfaces and they adhere to the necessary standards. Each interface is unique and so is the data which is transmitted through it. The OPEN meter interfaces are detailed in the OPEN meter architecture description [12].

Utilizing the CIM architecture means that the application interfaces on the system will comply with the CIM architecture. The CIM architecture will be used to design the interfaces. Interoperability can only be achieved when two interconnecting components are able to successfully exchange data for their processes. This successful exchange of data can and is achieved though the interfaces and the messages that the interfaces transmits. The messages are the lowest layer, the Message syntax layer. This is the basis for communication between interconnected applications. They are based on the profiles for the interconnecting application components. The profiles are developed for the components which intend to interoperate and this sits in the context layer of the architecture. The CIM architecture is implemented using Service Oriented Architecture, (SOA)[25]. SOA supports the CIM architecture with loose coupling and shallow integration, but mainly in combination with Web services SOA is able to define self-contained services to fit a loosely coupled architecture [25].

The other standards in the CIM group. The other standards in the CIM IEC standard 61968 are part of the demand side management and make them relevant for localising the OPEN meter architecture. The other parts, part 3 to 10 are interfaces which are necessary for the business functions of ‘th Interface Reference Model” [26]. These other standards in the group are to be incorporated into the localised architecture.

Adapting the OPEN meter architecture involved adjusting the roles of the already established components of the architecture for use in South Africa. The component interfaces are maintained, but the application interoperability is attained using CIM. This is a standard which is gaining popularity in South Africa and also adds to the localisation process. The components were also linked to the stakeholders within the South African context and the roles of these components took from this. Further work needs to be done for this to be considered more concrete, but firstly these must be validated. The validation of the adapted - localised architecture is done in the next section.

A less technical adaptation with technical implications is the user centred view. This aims to place more focus on the users as the center and most important part of the grid system. In using this user centred view, the roles of the components were

also adjusted. This user centred view also plays on the notion that the South African public is generally "power concious" - conscious of their electricity usage, due to the ever increasing demands on Eskom and the need for more efficient use to avoid the idea of load shedding. From the power alerts which are received via the local media, to the purchase of units for a pre-paid meter, the South African public is aware of their energy consumptions, and the user centred view aims to capitalise on this and also increase the user / consumers ability to manage their energy consumption.

The next chapter validates the proposed architecture, detailing how it meets the requirements for a grid architecture.

Chapter 8

Validating the Architecture and Framework

8.1 Architectural Goals

The National Institute for Standards and Technology (NIST) in the U.S. developed a Smart Grid framework roadmap for interoperability standards that establish the standards and protocols towards achieving interoperability on the entire grid [14]. This framework is used as a guideline to ensure that interoperability is achieved on the grid as it evolves and develops. The Smart Grid is a large complex system which will have its parts and components developed independently of each other and the need for interoperability between these parts is important, but even more important is standardizing the means to achieve this interoperability to ensure that as the parts and components are independently developed, they are able to interoperate when interconnected.

The interoperability of the adapted User Centred Micro-Grid is important for integration of the grid with other systems and components. This makes the NIST framework ideal and important for validating the User Centered Micro-Grid as it ensures interoperability as the grid evolves. The User Centred Micro-Grid is expected to evolve as it matures and the NIST framework caters for this with upgradeability, flexibility, scalability and maintainability goals.

The NIST roadmap describes architectural goals that have to be satisfied by any Smart Grid architecture. They serve as part of the framework which aims to guide architectures, and other parts that make up the grid [14], and the NIST framework

again proves vital to the User Centered Micro-Grid, as it is able to validate it in different areas and ensure that the proposed architecture meets the requirements. The NIST goals can be applied to Micro-Grids as well as the traditional larger Smart Grid, further justifying its use. Therefore applying the NIST framework to the User Centred Micro-Grid is important.

An American standard, The NIST framework is a positive point from successful deployments in the U.S that can be scaled and applied to the Micro-Grid which is a smaller deployment as it is generic and well defined. The framework is relevant and the goals can be applied based on the factors of the South African context. The goal for interoperability can be specified to ensure the User Centered grid is able to interoperate with components which are governed by South African standards, like the AMI standard and the communication interfaces standards. Ensuring the User Centered Micro-Grid is able to connect with the legacy systems which exist in South Africa like SCADA, is more evidence suggesting that the NIST framework is ideal for validating the User Centered Micro-Grid and the approach in this Research Report.

The NIST goals are discussed below [14].

- Options: Ability to cater for a wide range of technology options.
- Interoperability: The architectures should support interfacing with other systems.
- Maintainability: It should be safe, secure and maintained reliably.
- Upgradeability: Remain operational without difficulty even during periods of partial system upgrades.
- Innovation: Accommodate innovation in regulations and policies; and the integration of new and innovative energy system; among others.
- Scalability: Architecture has to support the developing large scale, secured systems.
- Legacy: Able to integrate and migrate with legacy systems.
- Security: Architectures should be intrusion resistant.
- Flexibility: Choice of implementation and architecture parts to implement.

- Governance: Architectures to support an efficiantly managed system of systems with consistency in policies for its ongoing design and operation.
- Affordability: Architecture should allow capital and life cycle savings with maintenance and operations.

Based on these architectural goals, the proposed architecture is validated, discussing how each of the goals is achieved:

- **Options**: The proposed architecture meets this goal by providing for future developments and extensions. The goal requires that the architecture must be able to work with legacy and new technologies, the OPEN meter architecture makes provision through interfaces to add new technologies later on and an interface to connect to legacy systems through the Central system. These new technologies could be within the household and will interface with the meter as one of the end user devices or interface with the concentrator which is outside of the consumers premises.
- **Interoperability**: The proposed architecture is able to support interfacing with other systems. Other systems are able to interface and interoperate as external devices to the system as well as end user devices. The interoperability on the localised version of the grid is further supported by the Common Information Model sets of standards which allow for application interoperability. The physical interconnection of the components is supported by standards including the ISO/IEC 8802.
- **Maintainability**: Local Operation and Maintenance devices which interface with the system at the Electricity meter, Concentrator and the Multi-utility meter are used for maintenance. These devices are used for configuration, and once this is done they are able to connect with the grid at these points to perform maintenance. The ability to connect at these points makes it easier to localise a maintenance issue. The proposed architecture is maintainable.
- **Upgradeability**: The Smart Grid is expected to continue evolve for a period before settling on an established implementation. The proposed architecture allows for this by being able to communicate and operate with Legacy systems. The Legacy systems are independent and the upgrades of the system will not affect or impact the Legacy system being operational. Another way in which the architecture allows for upgradeability is its shallow integration and loose coupling. The components are able to be developed independently, so when

an upgrade is being done on a part of the system, the other components are still able to function. Each component has its own responsibility which it can achieve independently. Communication will be affected with the parts of the system which are down or being upgraded, but the communication can be re-routed if necessary.

- **Innovation**: The proposed architecture considers future innovations by including the concentrator for communication with its Central System and the Electric meter in the house holds. Future innovations can easily be included in the architecture as components or devices, which will interface with the system at the relevant points.

- **Scalability**: The proposed architecture takes into consideration a whole range of scenarios and can be used for small or large systems, and can be up-scaled by including the necessary components. This makes it scalable. Each of the architectural elements which are the components, do contain applications that have specific responsibilities, which the applications and the components which contain them have been designed for. The components are efficiently placed within the system to allow them best perform their responsibilities.

- **Legacy**: The proposed architecture is able to integrate with Legacy systems, interfacing with them via the Central system. Through this link, the Legacy system is interacts via messages with the grid. The Legacy systems are independent to the grid, so the grid is able to evolve and develop without affecting the Legacy system or its actions.

- **Security**: The NIST developed the Interagency report, "*Smart Grid Cyber Security Strategy and Requirements*" which describes the Smart Grid Interoperability Panel's overall cyber security strategy for the Smart Grid [28]. The top down approach of identifying and modifying security requirements for the grid can be applied to the proposed architecture, but considering the components of the architecture and the interfaces between the components. The inter component security requirements will be defined for the interfaces based on the interaction which takes place through these interfaces [28].

- **Flexibility**: The proposed architecture is made up of components each with its own responsibilities, and these components can be arranged in different ways for different implementations depending on the design of the implementation. The Electric meter for example, in a different implementation this could be separated from the communication hub resulting in two components, again each with its own responsibilities. The proposed architecture's flexibility

is supported by the loose coupling and shallow integration. The shallow integration means that the components to not know a great deal about each other, and hence altering the arrangement and connecting various components will be simple through interfacing and be done easily.

- **Governance**: The proposed architecture, being implemented as a Micro-Grid in the various regional distributors, makes the nations grid a system of systems. Within the Micro-Grid itself, exists other systems of systems including the metering system and the management system. These systems can be identified as a combination of components which fulfil a particular responsibility. Through the life cycle of the grid, these systems are governed by the policies of the Micro-Grid, which will be shared by the other Micro-Grid's on the larger national grid. The policies, the standard are consistent even through the development and evolution of the grid. The consistent standards help manage the system and the standard of of the system, as all the components and future components must satisfy the necessary standards to be implemented as part of the grid.

- **Affordability**: The proposed architecture supports procurement of inter-operable equipment for the Grid, by developing the markets, both national and international by employing standardised interfaces to which national and international vendors can design to, and this enables the third party vendor components to be easily integrated into and interoperate with the components on the grid. Capital savings can be realised with the proposed architecture which is a Micro-Grid and will cost significantly less to implement that a traditionally large grid. The Micro-Grid is cheaper and can be implemented incrementally as it grows. The operations and maintenance are affordable as they are carried out through the devices which are connected at certain points, making it relatively easy to reach all the areas on the grid. As the grid develops and expands, the savings can be realised from the incremental nature. The Micro-Grid is on a smaller scale and can be implemented in the different municipalities in succession, implementing and activating each one before moving on to the next. The Micro-Grid approach generally makes the implementation more cost effective than the traditionally large grid.

8.2 The Test for CIM - proves interoperability

CIM is used in the proposed architecture for the integration of the applications on the grid system. The validation of the interoperability will hinge on the CIM interoperability tests. CIM has been tested and is still undergoing tests. The "European Network of Transmission System Operators for Electricity, ENTSO-E" plays a leading role in organising CIM interoperability tests [31]. The ENTSO-E CIM interoperability tests facilitate the development of CIM standards for both ENTSO-E and the IEC, these tests are designed to allow vendors to verify the correctness of the interpretation of the CIM standards [31]. These test are ideal, and can be used to verify the correctness of the CIM compliant interfaces on the adapted architecture. Tailored tests can be designed to replicate these tests of which some are suited to the European based context, but these tests are expected to be adequate for testing the interoperability on the grid. ENTSO-E has carried out four major tests, with the next one scheduled to take place during the week of the 14th of July 2014 [31]. These test focus more on the 61970 parts of the standard.

Another test carried out is the "Meter Data Management Systems' test (MDMS), which tests the IEC CIM standard 61968 - 9 [32]. These tests were carried out by the Electric Power Research Institute (EPRI) and tested the ability of participating Smart Grid technologies to exchange and interpret data using the IEC CIM messaging protocol between systems [32]. This standard is an important NIST Smart Grid requirement. The NIST prescribes the use of IEC CIM standards for integration and the adapted architecture presented does use these CIM standards. These tests have confirmed the implementation of these standards and the streamlined interoperability in a scalable architecture [32], which this is. The success of all these different tests implies that the use of CIM on the proposed architecture will guarantee the interoperability of the components on the grid. It is important to note that more tests are always being developed and performed and when these are carried out, their results can be incorporated into the architecture, where and how they affect it.

The other standards in the CIM group of standards which include IEC 61968 parts 3,4,6 and 13, make use of the integration patterns highlighted in IEC standard 61968. Similarly, the proposed architecture is tested by the UCA interoperability tests [25]. The CIM implementation used to carry out the tests was Service Oriented Architecture (SOA) with Web services, and the remote infrastructure approach led to reduced participation costs [25]. This allowed multiple systems to connect

remotely and show that they are consuming or generating a 61968 based message, thus validating interoperability and compliance to the accepted and standardised IEC 61968 messages [25]. This successful testing of the CIM standards which are used in the presented architecture validates the choice of standard and validates the interoperability of the presented grid and the messages used on the grid.
The successful testing moves the industry towards the notion that the 61968 standardized messages are complete, correct and ready for real world use [25].

The next chapter discusses the results of the localisation and validation. The proposed architecture offers an alternative view to the grid in South Africa.

Chapter 9

Discussion of Results

The result from this report is the proposed architecture for the grid. The architecture has been adapted considering user centred design, micro - grid to fit the South African context. This adapted result is a feasibly and achievable solution for the grid in South Africa.
The need to adapt the grid for South Africa, follows from the basic fact that each implementation will differ depending on the target environment. A successful implementation elsewhere provides guidelines for future successful ones, however these will still need to be adapted based on the characteristics of the environment for an even more efficient and minimally equally successful implementation.

This discussion serves to explore the possibility of a different approach to implementing the grid. The proposed solution does not serve as an immediate replacement to the current idea of the grid in South Africa, but it offers a different perspective which after more research and validation should be realistically considered as a possible alternative to the traditional grid, which takes into consideration the environment and uses.

The environment, the South African context, a developing environment in many ways does not have the same resources available and quite frankly is unique. There are different aspects of the presented architecture which capitalize on some of these special characteristics based on the South African context. South Africans can be said to be a power conscious public. The construction pre 2010 which caused 'load shedding' in parts of the country only raised the level to which South Africa is conscious of its power usage. Currently South Africa has in place a few mechanisms which are response type mechanisms that are to try reduce the energy consumption. One of these are the broadcast messages which are relayed daily informing the

consumer of the consumption rate at that point in time and advises on ways to reduce this usage. Pre paid meters is another mechanism. This is less response type. Consumers pre pay for electricity by buying the units on the electricity card which the prepaid meter uses to receive electricity for the household.
The user centred view used in the proposed architecture capitalizes on this characteristic, by aiming to provide more information to the consumer. This is done by increasing the readings taken from the household and processing this for the consumer and the regional distributor, enabling them make more informed decisions, to increase efficient energy management.

Another characteristic is the economy and financial power of the country. South Africa will probably not spend as much on Smart Grids as other countries would. The Micro-Grid approach eases this burden of costs as the Micro-Grid is smaller, more focused and will be cheaper to implement. They can be implemented in stages and independent of each other, meaning that there will not be a heavy financial strain at any point.
The result of this is a feasible different approach to the grid which with more research will become an alternative and possibly more effective implementation of the grid in South Africa. More work needs to be done before this design is ready for implementation.

The next chapter, given the proposed architecture and work done in this report, discusses possible areas for future work which extend from this report or are in a similar subject area.

Chapter 10

Future Work

Smart Grids are still relatively new in South Africa and an ideal implementation is yet to be confirmed. More work is due for the User Centred Micro-Grid, to define specific CIM standard based interfaces for each of the components. Furthermore, the data on the grid requires more work. The decision on what data needs to be measured and how often the data needs to be measured need to be discussed and answered to find the right balance for the grid.

Importantly, following from this report, a practical test needs to be set up to evaluate the proposed architecture and how feasible and achievable it is. This test can involve an existing grid, but with devices included to take more frequent measurements of the usage on the grid. The data flow and the communication on the grid in this set up will be vital.

Each of the interfaces identified for the grid, can be defined in more detail, detailing profiles for each one of them and the messages which will be transmitted and translated through them. This may involve parts 3-10 of 61968, which could be linked to particular interfaces within the grid. Added to the data flow is the security on the grid. This can be tested with established security tests to ensure the architecture is secure and to provide procedures for cases in which this security is breached.
The scope for development is wide as large amounts of research and work will need to be done to get bring about the implementation of the User Centred Micro-Grid in South Africa.

The next section, concludes the report, summarising the work done and findings.

Chapter 11

Conclusion

The overall aim of this research report is to present the localised architecture of the Smart Grid, a User Centred Micro-Grid approach based on the South African context.

The adapted architecture is based on the OPEN meter architecture, a U.S based standard. It is generic and robust enough to be modified for the purpose of the User Centred Grid. The architecture meets the requirements of the concerned standards for interoperability and communication as well as being compatible with the AMI standard in South Africa. This is important because AMI forms a large part of the Smart Grid.

In adapting this architecture, user centred design is applied, resulting in a more user focused Smart Grid. the Micro-Grid is preferred for its reduced scale. Combining these methodologies, we get a smaller and more focused system which is flexible to adapt to the factors and context of South Africa. The advantages and reasons for these choices include that the size makes the deployment and implementation easier, especially in a nation where the skills for the grid are still not mature yet. The increased focus of the Micro-Grid allows it to be adapted to the conditions in that environment, and more attention can be paid to implement the finer details of the system.

The adaptations were done in respect to the South African context. The grid is adapted to result in a more effective deployment. The result is a User Centred Micro-Grid that is focused on the users and their immediate environment, providing them with the right information when they need it for better electricity management. It is more flexible to cater for the scenarios presented. This User Centred Grid falls

in line with Eskom's targets for moving to a more efficient system of managing electricity usage. The responsibility of this management is more even, giving more control to the users, the main aim of the User Centred Micro-Grid.

The result of this is a validated user centred architecture, which presents an alternative approach to the grid in South Africa.

The proposed localised architecture is validated using the architectural goals of the NIST roadmap and framework for Smart Grid interoperability, while the application interoperability is validated and confirmed based on the interoperability tests which the chosen interfaces have successfully undergone. The South African AMI standard is considered and the architecture is shown to be compatible with it. Proving that the proposed solution is able to combine the best practices from successful deployments elsewhere with local requirements.
The results imply that the User Centred Micro-Grid is an implementation of the grid which should be considered in South Africa.

References

[1] South Africa.info. (2012), "South Africa's energy supply,", *Infrastructure*, http://www.southafrica.info/business/economy/infrastructure/energy.html.Uxh0qvmSzg9, Last accessed February 2014.

[2] Fischer,R. (2013), "SA must do more with the same for it's future electricity supply", *user centred Design*, http://www.bdlive.co.za/indepth/greeningyourbusiness/2013/06/06/sa-must-do-more-with-the-same-for-its-future-electricity-supply, Last accessed January 2014.

[3] Khatri, A. "Evolution of Future Electrical network in Eskom" *Technology Strategy and Planning: Eskom Research.*

[4] Echelon(2012), "Echelon Enables Micro Grids In India and South Africa", *Clearwater Mall Store Owners Manage Energy Use, Costs and Maximize their Revenue*, http://www.echelon.com/company/news-room/2012/microgrids-india-south-africa.html, Last accessed January 2014.

[5] McCulloch, M.D., Nixon, K.J., Levitt, S.P., Cronje, W.A., "A frame-work for understanding smart grid system measurements," *in First workshop on renewable energy, smart grid and computational intelligence applied to smart grid, Cape Town, South Africa, Aug. 2014, paper No. SG 2.*.

[6] Madhoo,H.(2014), "Investigating the Value Proposition Of Advanced Metering Infrastructure in Developed and Emerging economies with A Focus on South Africa", *Smart Grids*, *MSc Dissertation submitted to the Faculty of Engineering and the Built Environment, University of the Witwatersrand, Johannesburg.*

[7] Easton,B.(2012), "A Report on the Economic benefits of Smart Grids," *Ernst and Young.*

[8] Hurgel,J.(2010), "Cloud Computing and Smart Grids: How are they related?", *Smart Grids*, http://networkingexchangeblog.att.com/

enterprise-business/common-ground-between-the-grid-and-the-cloud/, Last accessed October 2013.

[9] Siemens(2013), "Siemens: Providing Smart Grid Solutions in Africa. the dawn of smart, transparent and versatile power grids", *Smart Grids: Africa Utility Week*, http://www.african-utility-week.com/pages/Detail/6337, Last accessed October 2013.

[10] Burger,S.(2012), "South Africa opts for incremental Smart-Grid migration,", *Smart Grids Migrations*, http://www.engineeringnews.co.za/article/business-needs-crucial-for-eskom-smart-grid-migration-2012-03-30, Last accessed October 2013.

[11] Chowdhury.S, Nthontho.M, and Winber.S,(2011), "Investigating Implementation Of Communication Networks For Advanced Metering Infrastructure In South Africa,", *Department of Electrical Engineering, University of Cape Town, South Africa, Cape Town.*

[12] Usability Professionals' Association(2011), "What is User-Centered Design?", *user centred Design*, http://www.usabilityprofessionals.org/usability_resources/about_usability/what_is_ucd.html., Last accessed January 2014.

[13] GridWise Architectural Council,(2008), "GridWise Interoperability Context-Setting Framework", *Smart Grids Interoperability*, pp. 1-52, 2008

[14] National Institute of Science and Technology,(2012), "NIST framework and Roadmap for Smart Grid interoperability Standards Release 2.0,", *Smart Grids Interoperability*, 2012.

[15] Smart Grid Reference Architecture Team,(2011), "Smart Grid Reference Architecture, volume1", *IBM Cisco SCE*, 2011.

[16] Chandy,K. Gooding,J and McDonald.,J (2009), "Systems Evolution to Guide Strategic Investments in Modernizing the Electric Grid", *System of Systems Architecture*, 2009.

[17] OPEN meter (2010), "Design of the Overall System Architecture", *Open Public Extended Network metering*, Version 1.1, WP3, Energy Theme; Grant Agreement Number 226369.

[18] Anvaari, M., Cruzes, D.S., and Conradi, R., (2011) "Smart Grid Software Applications as an Ultra-Large-Scale System:Challenges for Evolution," *Smart Grid Software*, IEEE.

[19] South African Smart Grid Initiative (2011), "South African Smart Grid Vision", *Smart Grids*, `http://ww.sasgi.org.za/`, Last accessed January 2014.

[20] Smart Meters(2010), "How Smart Meters Work?", *Smart meters*, `http://www.smartmeters.com/faqs/1246-how-smart-meters-work.html`, Last accessed February 2014.

[21] Lee, P.K., and Lai, L.L., "Smart Metering in Micro-Grid Applications," *IEEE* , 2009.

[22] Smat Grid Gov: Rect overy Act Smart Grid Programs(2013), "Advanced Metering Infrastructure and Customer Systems", *AMI*, `https://www.smartgrid.gov/recovery_act/deployment_status/ami_and_customer_systems`, Last accessed February 2014.

[23] Schindlholzer,B. (2008), "The 13 Most Popular Methods For user centered Design", *user centred Design*, `http://www.diametrics.io/the-13-most-popular-methods-for-user-centered-design.html.`, Last accessed February 2014.

[24] Schneider,D.K. (2011), "Software Localization", *Software Localisation*, `http://edutechwiki.unige.ch/en/Software_localisation`, Last accessed February 2014.

[25] Reinprecht, N., Torress, J., and Maia, M., "IEC CIM architecture for Smart Grid to achieve interoperability" *Grid-Interop Forum 2011*,International CIM Interop in March 2011.

[26] IEC 61968-1, (2003) "Interface architecture and general requirements" *Application integration at electric utilities System interfaces for distribution management*.

[27] Device Lamguage Message Specification,(2004), "Companion Specification for Energy Metering - Architecture and Protocols", *COSEM Communications Framework*,4th. Ed. 2004.

[28] National Institute of Science and Technology,(2010), "Smart Grid Cyber Security Strategy and Requirements", *The Smart Grid Interoperability Panel Cyber Security Working Group*, 2010.

[29] Anglo Info South Africa (2014), "Electricity Suppliers in South Africa", *Housing - Electricity*, `http://southafrica.angloinfo.com/housing/setting-up-home/electricity/.`, Last accessed February 2014.

[30] European Network of Transmission System Operators for Electricity (2013), "Interoperability (IOP) Tests", *Interoperability Tests*, `https://www.entsoe.eu/major-projects/common-information-model-cim/interoperability-tests/`, Last accessed February 2014.

[31] Ecologic Analytics (2010), "IEC/CIM Interoperability Testing for Meter Reading and Control Confirms Ecologic MDMS Smart Grid Readiness, *Interoperability Tests*, `http://www.ecologicanalytics.com/news/pr_EPRI_Interop.html`, Last accessed January 2014.