

https://dspace.org/

Understanding legitimation and the framing of claims: challenging housing demolitions, fighting for a home in Lenasia

Molopi, Moloi Edward

2015-04-30
http://hdl.handle.net/10539/17579

Downloaded from a DSpace repository. https://dspace.org/

UNIVERSITY OF THE WITWATERSRAND

SCHOOL OF ARCHITECTURE AND PLANNING

Understanding Legitimation and the Framing of Claims: Challenging Housing Demolitions, Fighting for a Home in Lenasia

Moloi Edward Molopi

A research report submitted to the Faculty of Engineering and the Built Environment: University of the Witwatersrand, Johannesburg, in partial fulfilment of the requirements for the degree of **Master of Science in Town and Regional Planning (Urban Studies)**

Supervisor: Professor Claire Bénit-Gbaffou

Johannesburg 2015

Acknowledgements

This work is a culmination of efforts put in, not just by myself but by many others, in this project. It is only fitting that I recognise their efforts and support to this work.

- My gratitude goes towards the NRF: SARChI Development Planning and Modelling for the financial support without which this project would not have materialised.
- To the most hard-working supervisor I know who has literally been behind this project from its inception to the last full-stop. Claire, it has truly been an awesome journey and I must say I am glad to have travelled it with you. Your dedication, not just to this project, but to your work in general inspires me. You have influenced me far more than you'll realise (perhaps far more than I'm willing to show) but just know that when I grow up, I want to be like you!
- To my immediate Family - "*Home should be made all that the word implies. It should be a little heaven upon earth*" Adventist Home, p.15.3. You have truly demonstrated to me God's ideal for the family and what a privilege it has been. Thank you for the support (moral, financial and otherwise) shown throughout the research. Thank you for your longsuffering even when it seemed this project would never end.
    - Ntate – For the times you were ready to pick me up from school late at night when the project demanded I work late
    - "The Girl" you and I both know who the best sister in the world is, akere? Thank you for allowing me to take the laptop even when you desperately needed it. Thank you for also reading and editing some parts of the research
- Urban Studies 2013 Cohort, you guys have been awesome, thank you for partaking with me in the pleasures, agonies and mixed emotions of being a Masters student at Wits. Special mention goes to:
    - Thembani, thanks for being a friend and a brother. Thank you for constantly nagging me to "fetsa ntho ena" I have headed to your call – at last!!

    - Loyiso, with whom I have shared much of the distress and pains of writing a thesis past the prescribed submission date and for running this race with me to the finish line, it was great to know I was not alone.
- All the respondents who took their time and availed themselves for interviews. Thank you for all your valuable inputs; you have shaped greatly the contents of this project. It is true that without you this project would have not been a success.
- I have also drawn strength from all who have shown an interest in the research and allowed me to share a thing or two with them regarding it.
- When all is said and done all praises and honour are due to God.

This work is based upon research financially supported by the National Research Foundation (NRF). Opinions, findings and conclusions or recommendations expressed in this material are solely those of the author and not necessarily those of the NRF. The NRF does not accept any liability thereto.

Declaration

I, Moloi Edward Molopi declare that this research report is my own unaided work. It is being submitted for the Degree of Master of Science in Town and Regional Planning (Urban Studies), in the University of the Witwatersrand, Johannesburg. It has not been submitted before for any degree or examination to any other University.

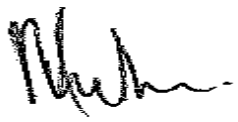

Moloi Edward Molopi

17 February 2015

Abstract

In November 2012, the Gauteng Provincial Government engaged on a programme to demolish houses that were illegally built on government land in Lenasia, a suburb located 30 kilometres south of Johannesburg. Over 50 homes were demolished with further demolitions being scheduled. The demolitions spurred various actors into action. Following a court interdict applied for by the South African Human Rights Commission (SAHRC) on behalf of the residents, the government was then forced to cease with the demolitions. Within the dispute various claims have been advanced and legitimation processes entered into. This study uses the case of the demolitions in Lenasia to investigate the nature of legitimation and the framing of claims. This is done through a consideration of the different actors in the demolitions and each of the claims advanced. The central claims of this work are that legitimacy is context-specific and in a state of constant formation. Furthermore, claims are used to express worldviews and they serve as strategic standpoints for access to various goods.

List of Figures

Figure	Figure Description	Page
1.1	Area of the demolitions in Lenasia	9
1.2	Map showing the location of Lenasia and Lenasia South in Gauteng	11
2.1	Woman trying to prevent her house from being demolished.	14
2.2	Diagrammatical representation of the research methodology	18
2.3	Image portraying different building types that occur between the "legal" and "illegal" residents	32
3.1	A Street in the Johannesburg suburb of Greenside with an abundance of green landscape	53
4.1	One of the earlier illegally built houses in Lenasia South	63
4.2	Extract from Newspaper article	70
4.3	A timeline of the demolitions	72
4.4	Rubbles of a recently demolished house with Baloyi's house standing in the background	75
4.5	A timeline of the SAHRC involvement in Lenasia	78
5.1	"Legal residents" protest against illegal housing in Lenasia South extension 4	88
5.1	Residents showing off their utility bills during a protest in favour of the demolitions.	91
5.2	Aerial view of the neighbourhood around Troy Peak Street, Lenasia South extension 4	101
5.3	Legal houses on Troy Peak Street.	102
5.4	2009 Aerial photograph of Troy Peak and Surroundings	103
5.5	Houses that have been illegally built on government land on Troy Peak Street.	104

Abbreviations

AFCU – Anti-Fraud and Corruption Unit

ANC – African National Congress

COSATU – Congress of South African Trade Unions

LRC – Legal Resources Centre

NGO – Non-governmental Organisation

NHBRC – National Homebuilders Regulation Council

SACP – South African Communist Party

SAHRC – South African Human Rights Commission

SANCA – South African National Council on Alcoholism & Drug Dependence

SANCO – South African National Civics Association

SPLIT – Special Lenasia Intervention Team

ACKNOWLEDGEMENTS I

DECLARATION IV

ABSTRACT V

LIST OF FIGURES VI

ABBREVIATIONS VII

CHAPTER 1: A GENERAL INTRODUCTION TO THE RESEARCH PROJECT 4

1.1 Encounters with the research project 4
1.2 Rationale 6
1.3 Aim of Study 6
1.4 Research Question 7
1.5 Hypothesis 7
1.6 Introduction to Case Study 8
1.7 Outline of Chapters 11

CHAPTER 2: ON THE METHODS 13

2.1 Images of the Demolitions 13
2.2 Entering the Field 16
2.3 Methodological Challenges 20
2.3.1 Researching in environments of precariousness 20
2.3.2 Concealed or Revealed? The politics of naming 23
2.3.3 The Interview that never happened 23
2.4 Accessing the State 25
2.4.1 The Ward Councillor – Paul Molutsi, Ward 120, ANC-led 25
2.4.2 The Provincial Government – Monde Mofokeng 27
2.5 The Residents 30
2.5.1 Busi Hleza 30
2.5.2 Residents living under the threat of demolition 31
2.6 Opposing the Demolitions 33

2.6.1 THE "ILLEGAL" RESIDENTS OF TROY PEAK 33
2.6.2 THE ROLE OF SANCO 34
2.6.3 THE SOUTH AFRICAN HUMAN RIGHTS COMMISSION 36
2.7 CONCLUSION 36

CHAPTER 3 A REVIEW OF THE LITERATURE 38

3.1 ON LEGITIMACY AND LEGITIMATION 38
3.1.1 THE CONCEPT OF LEGITIMACY 39
3.1.2 LEGITIMACY OF NON-STATE ACTORS 42
3.1.3 LEGITIMATION 44
3.2 ACCESSING LAND AND HOUSING IN SOUTH AFRICAN CITIES 47
3.2.1 SELF-MOBILISATION IN THE HOUSING PROCESS 49
3.3 VISIONS OF THE SUBURB 51
3.4 CLAIMS OR RIGHT TO THE CITY? 54
3.5 CONCLUSION 56

CHAPTER 4 – NARRATIVES OF THE DEMOLITIONS 57

4.1 FINDING THE FACTS – UNRAVELLING NARRATIVES OF THE DEMOLITIONS 57
4.1.1 AN ELABORATE CRIME SYNDICATE AND THE QUESTION OF RESIDENTS' COMPLICITY 57
4.1.2 FAILED NEGOTIATIONS 64
4.1.3 DIGGING HISTORY FURTHER – A FAILED PROVINCIAL HOUSING PROJECT, OPENING THE WAY TO THE SCAM. 68
4.1.4 TIMELINE OF THE DEMOLITIONS: THE GRAND NARRATIVE? 72
4.2 ACTING FROM BELOW: THE ROLE OF SANCO 74
4.3 ENGAGING THE COURTS: THE ROLE OF THE SAHRC 76
4.4 THE ROLE OF SPLIT 83
4.4.1 SPLIT: THE FAILED MEDIATION PLATFORM 83
4.5 CONTENTIONS IN SEEKING A SOLUTION 84
4.5.1 DIFFERENT CLAIMS MADE 85
4.6 CONCLUSION 86

CHAPTER 5 – VISIONS OF THE SUBURB IN LENASIA SOUTH 88

5.1 THE QUEST FOR FURTHER DEMOLITIONS **89**

5.2 THE DEVELOPMENT OF LENASIA **94**

5.3 THE DESIRED SUBURB **96**

5.4 DREAMS UNFULFILLED **97**

5.5 STRUGGLING FOR THE DEVELOPMENT OF THE SUBURB **98**

5.5.1 THE POLITICS OF SPACE 99

5.6 A CLOSER LOOK AT LENASIA SOUTH **100**

5.6.1 MORE ON THE CLAIMS 104

5.7 CONCLUSION **106**

CHAPTER 6 – CONCLUDING CHAPTER **107**

6.1 LEGITIMATION/DELEGITIMATION PRACTICES **107**

6.2 AS A WAY OF CONCLUSION - ON POSSIBLE SOLUTIONS **109**

6.2.1 A LOOK AT LAND TENURE 109

BIBLIOGRAPHY **111**

MEDIA ARTICLES 117

Chapter 1: A General Introduction to the research project

"*The beauty of this is that you are doing research on your own community. It shows that you have a concern about what is going on. You have heard about it [the demolitions] but you don't have a deeper understanding. You have read about it in the newspapers, seen it on TV and the media as a whole. But you said, I need to research about this issue*"

- Busi Hleza (2013), Personal Interview

1.1 Encounters with the research project

This statement was made to me by a resident of Lenasia South Extension 4 during an interview session with her. It accurately and somehow movingly describes some of my motives for engaging on this particular research project.

Towards the end of 2012, the Gauteng Provincial Government engaged on a programme to demolish houses that were illegally built on government land in Lenasia and Lenasia South. These areas are both situated about 30 kilometres south of Johannesburg. Over 50 homes were demolished with over a hundred further demolitions being scheduled. Following a court interdict applied for by the South African Human Rights Commission (SAHRC) on behalf of the residents, the government was then forced to cease with the demolitions. The government has since then entered into negotiations with these residents and other stakeholders in the matter.

The demolition of these houses generated much debate about the actions of government in dealing with issues surrounding housing and settlements. The debate centred on the violent manner in which the demolitions took place.

The debates surrounding the demolitions and the developments that followed the demolitions have been of great interest to me. My interest in this matter is firstly due to my upbringing and current residence in Lenasia South. As a local, I have witnessed many of these houses being built illegally. However, like many of the residents in the area, it took a while before I became aware of illegal nature of these houses. It was when some of these houses were being built that allegations surfaced that the land used to build the houses was acquired illegally. In spite of this, the possibility of these houses being

demolished did not seem likely to us as residents. Thus the general shock when the demolitions actually took place.

Following the demolitions there has been a polarisation among the residents of Lenasia South. The distinction is made between residents who have acquired land through the legal and illegal processes; these residents have been referred to as “legal residents” and “illegal residents” respectively. These term carry with them a certain tone and connotation. I have used scare quotes in order to try and move away from these connotations. Will this might not be enough to neutralise the terms, they at least go some way in allowing for a discussion without the burden of bias. The two groups of residents formed organisations known as “Lenasia Concerned Residents’ Group” and “People Against Illegal Land Invasion”, respectively. These groups are to a large extent not formally organised and were largely formed as a response to the demolitions..

The actions of government have been criticised by the “illegal residents” and various organisations. Among these were, The South African National Civic Organisation (SANCO) and the Human Rights Commission (SAHRC 2012, SABC 2012). The actions undertaken by government were mostly seen by these organisations to have no place in a democratic and post-apartheid society. The government has defended its actions by stating that it was acting in accordance with a court order that permitted them to demolish the houses and that its actions were therefore legal. The demolitions were also supported by a group of residents who argued that government must proceed with the demolitions. In my initial undertaking of the research I wanted to understand three things. Firstly, I wanted to understand how government understands its own actions and how it articulates this understanding. Secondly, I also wanted to understand how the residents whose houses have been demolished or were under the threat of demolition challenged the demolitions. Lastly, I wanted to understand how despite the apparent cruelty of the demolitions, some neighbouring residents would continue to pressurise government to continue with the demolitions.

In doing this I realised that each of these stakeholders listed above makes certain claims regarding the demolitions and the context in which they are to be understood. These claims are each framed differently to have a specific appeal. In addition to this there is a certain legitimation that is expressed or created when articulating these claims. In

recognising this I sought to understand the nature of legitimation and the framing of claims using the demolitions to come to this understanding.

1.2 Rationale

The demolitions were first initiated in extension 13 of Lenasia and proceeded to extension 4 of Lenasia South. Refer to figure 1.1 for a map of the area. The demolitions attracted a lot of media attention. Various news agencies were there to capture each of the demolitions that took place. Among some of the footage captured were of women and children crying next to their houses being demolished. These images were broadcast on national television creating hysteria around the demolitions. At this time, while some were calling for the demolitions to stop, the government expressed interest in advancing with the demolitions.

What ensued was a set of legitimation and delegitimation discourses on demolitions. Along with this, there were specific claims that were advanced. Some of the claims advanced are in the context of Lenasia. The constitution of South Africa recognises the right of citizens to housing. The demolitions happen in the context of a post-apartheid democratic state that has committed itself to ensuring that there is adequate housing for all. The state has done this through the allocation of free low-cost housing and the provision of subsidised social-housing. However, the state has also in this time facilitated many evictions of through informal settlement eradication programmes. The evictions in Lenasia remain a challenge in that these evictions did not happen in informal settlements but rather in an established settlement. Much of the debate in the demolitions is situated in this context.

1.3 Aim of Study

The aim of this study is to propose an understanding of legitimation and how claims are framed. This involves a move away from the understanding of legitimacy as fixed and universally applicable. This research contributes to the lack in the literature in as far as legitimation is concerned. The case of the demolitions in Lenasia presents a perfect case for the study of this concept.

Furthermore, this research seeks to bring an understanding of how claims are advanced. This is done in unpacking the various claims advanced in the dispute surrounding the Lenasia demolitions. The study considers the various actors involved in the demolitions

and the claims advanced by each actor. The claims advanced in the demolitions do not always interact with one another and can present a somewhat confused narrative. It is also the purpose of this study to unravel the confusion and bring together a coherent narrative of the demolitions

Claims are important to study because they rely on different conceptions of what justice is; of what the good city is. They bring about these different conceptions of rights and conceptions of what is due. Furthermore, it is through these claims that we are able to look into the different aspirations exist within the city; whether they be aspiration to order and good management or aspiration to free housing. In studying claims and legitimation practices we are better able to look at the different goals, aspirations and understandings of the post-apartheid city and what it means to inhabit that city.

1.4 Research Question

What are the different legitimation discourses used in the Lenasia demolitions?

Sub-Questions

- Who are the actors and how are they involved?
- What are the different claims that emerge out of the demolitions and how are they framed?
- What is the timeline of the housing demolitions in Lenasia?
- Is there a correlation between legitimation discourses and political strategies?

1.5 Hypothesis

There are many ways in which legitimacy can be contested and made up. It is in these legitimation and delegitimation processes that spaces for particular claims to be made are created and also destroyed.

Claims serve two purposes; they are firstly expressions of worldviews. In this context the framing of claims follows the context in which the actors find themselves. Claims arise out of the reality that one experiences. The reality is an aspect of the present as such the reality is formed from current conditions. Secondly, claims are strategic positions adopted in order for a certain gain. Claims are as such advanced as a way to improve on the present and influence the future.

1.6 Introduction to Case Study

The demolitions in Lenasia extension 13 and Lenasia South extension 4 present a unique opportunity to analyse legitimation and delegitimation discourses and the framing of claims. Figure 1.1 below is the location of the demolitions in Lenasia and Lenasia South.

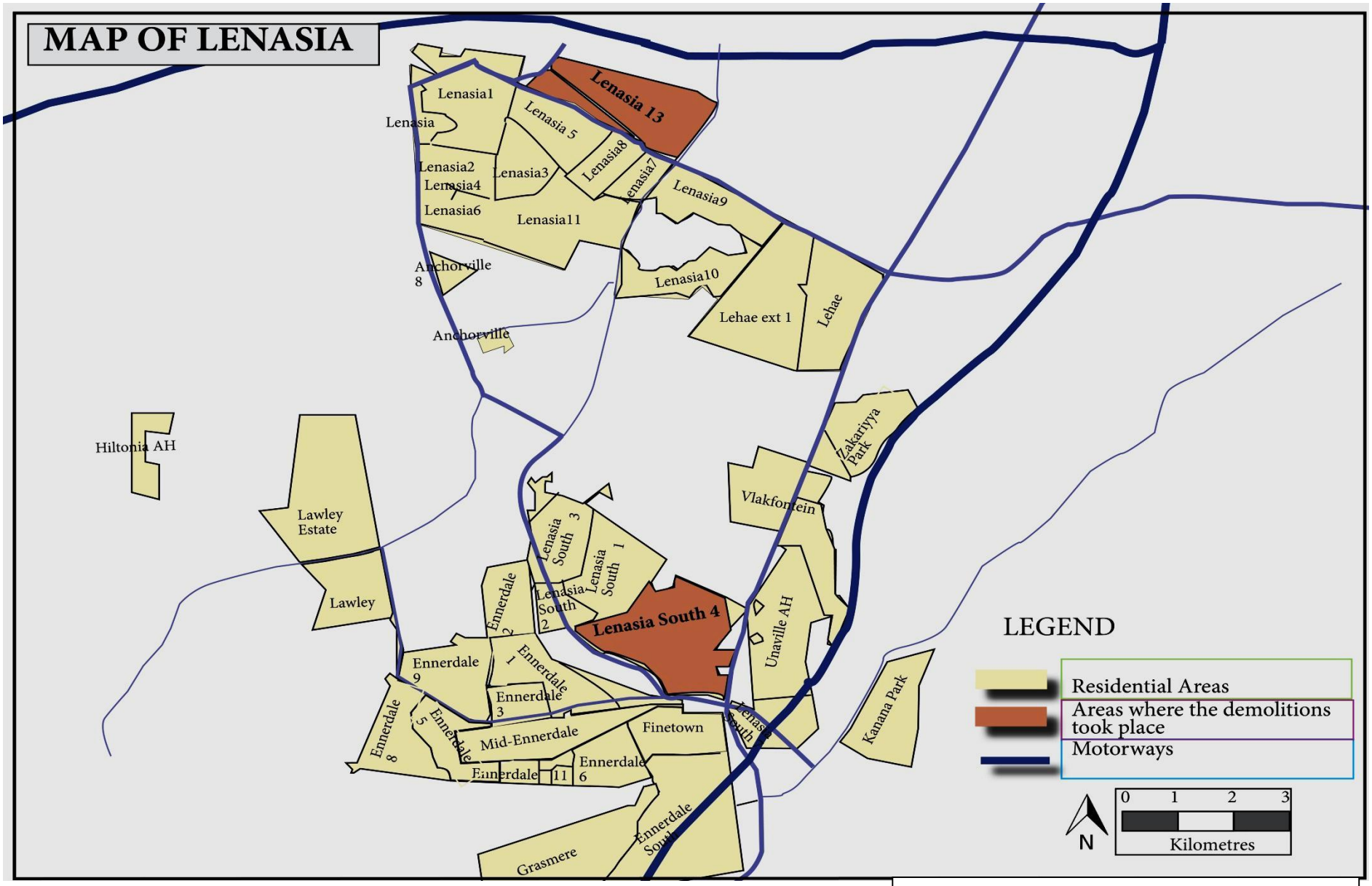

Figure 1.1 Area of the demolitions in Lenasia.
Source: Molopi 2014

Lenasia is located about 35 kilometres South West of the Johannesburg Central Business District (CBD). In the apartheid era, it remained the only designated place for Indians as per the Group Areas Act (Dinath 1972). Lenasia was mainly made up of families that were forcibly removed from areas such as Pageview and Vrededorp which were non-racial areas close to the city centre. Pageview was in 1956 declared a white Group area by the apartheid regime. In line with apartheid policy at the time, non-white residents were to be forcibly removed from the neighbourhood and relocated to townships created by the state. Many Indian landowners and shopkeepers resisted the forced removals from Pageview. This resistance lasted right up to 1970s. It ended with the Indians being moved to the new Indian suburb of Lenasia (Beall et.al 2002, 50-51; Parnell and Beavon 1996, 13).

Since then there has been a lot of infrastructural and economic development in the area which can be seen in the many well designed and expensive houses and a thriving CBD (Beavon 1992, 90). Lenasia is also home to two shopping centres, namely, Signet Terrace and Trade Route Mall (Desai 2008, 63). One can also find in Lenasia, various banks, car dealerships and industrial factories which all contribute to the economy of the area (Benit-Gbaffou, Molopi & Tunce 2013, 144).

Figure 1.2 Location of Lenasia and Lenasia South in the province of Gauteng.

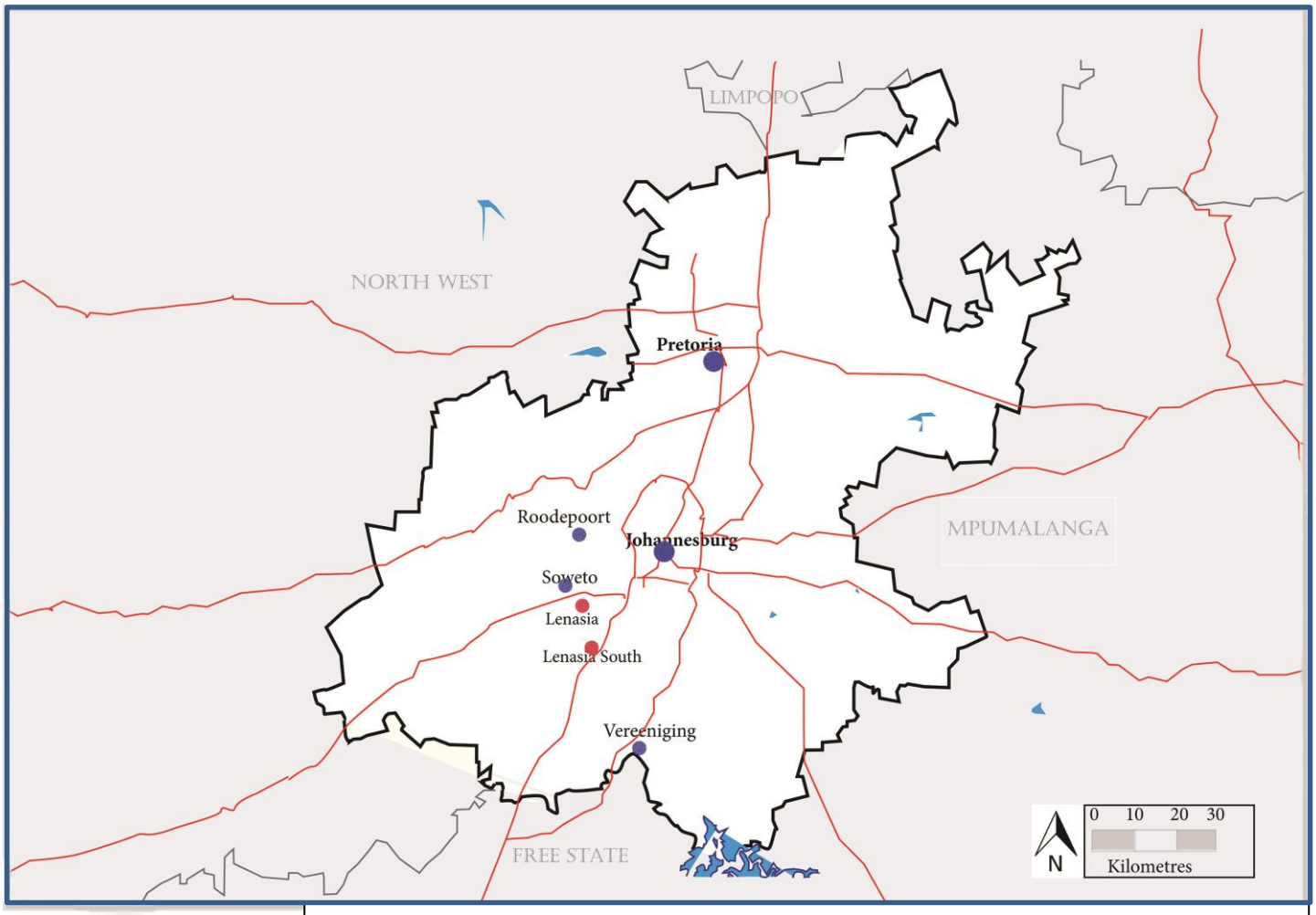

Figure 1.2 **Map showing the location of Lenasia and Lenasia South in Gauteng**
Source: Molopi 2014

1.7 Outline of Chapters

The study is comprised of six chapters which are outlined in the paragraphs below. Each of these paragraphs serves to explain the nature and content of the respective paragraph.

Chapter One is an introduction to the study. It lays out the personal motivations and the aim of study. The rationale, hypothesis and the research question are explained in this chapter. Furthermore the chapter introduces the study case study.

Chapter Two unpacks the methods employed in research. The chapter considers at length the challenges faced in the conducting the research and how they were overcome. It especially considers the challenge faced by qualitative researchers on sensitive topics and how this sensitivity unfolded in this research. It outlines each interview looking at the way in which it was attained and the manner in which it progressed.

Chapter Three is a review of the literature. It looks at the concepts that are pertinent to this research. These include: legitimacy and legitimation, claims and claim-making, right to the city, access to land and a brief study on suburbia in South Africa. The chapter looks at how these concepts have been understood in the literature and their application to study. A conclusion that links all these concepts is then drawn.

Chapter Four unpacks the narratives of the demolitions. It considers the actors and pieces together the facts of the demolitions. Each of the actors in the demolitions is considered along with the roles they place in the dispute. The chapter considers the legitimation discourses advanced and the claims articulated. It brings out the context in which these discourses and claims are advanced, and the narrative of the demolition framed.

Chapter Five considers expression of the suburb in the case of Lenasia South. It considers the suburban ideal and how it has influenced the actions undertaken by the residents. The chapter brings an understanding to the activism of the "legal residents" and their call for further demolitions.

Chapter Six is the concluding chapter. It summarises the content of the study and considers progress in this case.

Chapter 2: On the Methods

This research looks into ways in which legitimation claims are framed and expressed looking at the case of Lenasia South extension 4. Since the research seeks to understand 'how' these processes are formulated, a qualitative research method focusing on a case study has been adopted (Creswell 2003, 131). The case study method is suitable in seeking to understand these concepts within a particular context (Baxter and Jack 2008, 545). In conducting this research I was faced with various methodological and conceptual challenges. I outline some of these challenges and my attempt to overcome them in the section below.

2.1 Images of the Demolitions

In the beginning of chapter 1 I outlined part of my personal motivations for engaging in this particular research project. The other part was generated by an image that was taken during the demolitions. My interest was not simply in the image itself but the various ways in which it was interpreted. From this image emerged different sets of claims and legitimations. This image is captured in figure 2.1 below. It is an image of a woman trying to prevent her house from being demolished. At the moment the picture is taken, she is seen to be using her body to stand between the bulldozer and her house. This image has been used several times in print media and on the internet in reference to the demolitions. Articles with titles such "Lenasia: The haunting abandonment of humanity" have used the image to foster disapproval for the government's actions. Moreover, the image has been widely used as a caption in articles on the demolitions, even if no specific reference to it was made in the articles themselves.



Figure 2.1 **Woman trying to prevent her house from being demolished. Source: Associated Press 2012**

This picture brings about many contestations and evokes much emotion. To many, it relates a tale of government's repression of the poor and brings apartheid's forced removals into present reality. It relates a tale of a state that is keen on using violence against the poor and marginalised; a state that further exacerbates the difficulties experienced by some of its vulnerable citizens. This is a tale that has enjoyed the greatest publicity and attention. Footage of the demolitions was also captured by various news agencies and broadcast on national television. The scenes displayed a method employed by government which has an uncanny resemblance to that employed by the apartheid regime.

However, there is another tale that begs to be told. This is a tale that sees the triumph of the rule of law and respect for democratic processes. This is a tale that sees justice being served and showing no toleration for criminal activities. This narrative has enjoyed far less airplay and harder to pick up. This narrative seems inconsistent with the cruelty one sees at face-value. However, much like the first narrative, this is a narrative worth

exploring. Primarily, because it captures some of the intricacies regarding the case study that escapes the first narrative. This then calls for a deeper analysis of the issues at stake.

In a current affairs programme on national television on which the demolitions were discussed, Mr Mongezi Mnyani, who was the Head of Department of Gauteng Local Government and Housing Department at the time, debated the apparent cruelty of government in administering the demolitions. In the statement below Mnyani was responding to a video in which a woman was seen frantically crying as she was being evicted out of her house before it was demolished.

> *But again I want to correct something. Even the insert that you saw, that house that you saw that was put down, there was no body living there. I have seen something today where people put curtains when you go inside it's just an empty shell, nobody is living there. So in the mind they are creating an impression that we as government are heartless. There is nobody living there, they are staying somewhere*.[1]

These same remarks were made regarding the picture discussed. These different contestations drew my interest to this research project. This was reinforced by the fact that it was taking place in my neighbourhood, a neighbourhood I had grown up in and continue to be part of. I did not witness the demolitions first hand as I had been visiting elsewhere when they took place. However, like many South Africans I witnessed the demolitions on television. My initial reaction to the demolitions was that of shock. Perhaps I was also a little confused about how I should feel. The shock was due to the fact that I had not expected that we could witness such actions by a democratic government.

Furthermore, I was shocked by the government's apparent lack of sympathy for the poor and ruthlessness of its actions. Repeatedly, images of women and children crying in front of their demolished houses were shown to us by various national media outlets. Repeatedly I read in the newspapers of how unfair government's actions were. As such, the research question, at the initial stages was framed in a way that sought to understand some of the factors that led to government taking on such drastic measures of

[1] Mnyani, M (2012) Interview on *Interface*, Available https://www.youtube.com/watch?v=GNIUy45gTi8

demolitions. The research question has evolved numerous times since then. Each evolution was informed by the changing dynamics of the research.

2.2 Entering the Field

The research was conducted using interviews, personal observation and media analysis in collecting data as well as being in constant interaction with my theoretical readings. In the fieldwork research, I had three in-depth interviews with key informants and several other interviews with the residents of Lenasia South extension 4. Although the demolitions took place in two areas, namely, Lenasia extension 13 and Lenasia South extension 4, I focus my research only on the latter. This is mainly because it is the demolitions in extension 4 that caught the attention of the media and subsequently making this an issue of national importance. Secondly, the activity of resisting or encouraging the demolitions has been more focused in extension 4. Extension 4 alone provides sufficient material to warrant a focussed case study. As such the key informants in the research are associated in one way or the other with Lenasia South extension 4.

The fieldwork began with a desktop research on the subject and a reading of various newspaper articles and other media sources such as recorded television shows.[2] This was followed by an identification of key figures in research. A list of these was drawn up with their contact details as provided in various press release statements. The people whom I sought to interview were the leaders of the stakeholders in the demolitions. These stakeholders were; the state, SANCO, SAHRC, the "illegal residents" as well as the "legal residents." The two groups of residents formed organisations known as "Lenasia Concerned Residents' Group" and "People Against Illegal Land Invasion", respectively.

In addition to this, I also conducted an analysis of the Special Lenasia Intervention Team (SPLIT). SPLIT is a task team formed by the then Minister of Human Settlement, Tokyo Sexwale, A few weeks after the demolitions took place. It was formed with the purpose

[2] A comprehensive list of media sources is provided in the bibliography. This is a list of some of the articles used: De Vos, P (2012) "Lenasia: The haunting abandonment of humanity" in *Daily Maverick* available from http://www.dailymaverick.co.za/opinionista/2012-11-21-lenasia-the-haunting-abandonment-of-humanity/#.VEOVMxYW78l on 16 May 2014
Nicolson, G (2012) "Levelling in Lenasia" in Daily Maverick available from http://www.dailymaverick.co.za/article/2012-11-13-levelling-in-lenasia#.VEOccxYW78l accessed on 24 April 2013
SANews (2012) "Govt appeals for co-operation in Lenasia housing case" available from http://www.sanews.gov.za/south-africa/govt-appeals-co-operation-lenasia-housing-case accessed on 29 March 2014
Mafisa, I (2012) "Lenasia land talks stall" in *The New Age* accessed from http://www.thenewage.co.za/mobi/Detail.aspx?NewsID=111572&CatID=1009 on 15 August 2013

of finding an amicable solution to how the demolitions are handled.[3] SPLIT seemed particularly important to me as it was to be a space where all those who had a stake in the demolitions were to come together to resolve and find solutions to the pertinent issues. It was to be inclusive of all the stakeholders that were involved in the Lenasia demolitions. These stakeholders were represented by the leaders of the various organisations, including those I had identified as key respondents for this research.

However, I was not able to extract much information regarding discussions in SPLIT as the matter was *sub judice* and the leaders were committed to maintaining confidentiality in matters discussed therein. Therefore, much of the data for analysis come from media reports, press release statements and to a lesser extent the personal interviews with the leaders of these organisations.

Figure 2.2 presents a diagram of the research methodology.

[3] SAHRC (2012c) "Lenasia: SAHRC welcomes and supports the intervention team announced by the Human Settlement Minister" in *The South African Human Rights Commission* accessed from http://www.sahrc.org.za/home/index.php?ipkArticleID=157 on 26 February 2014.

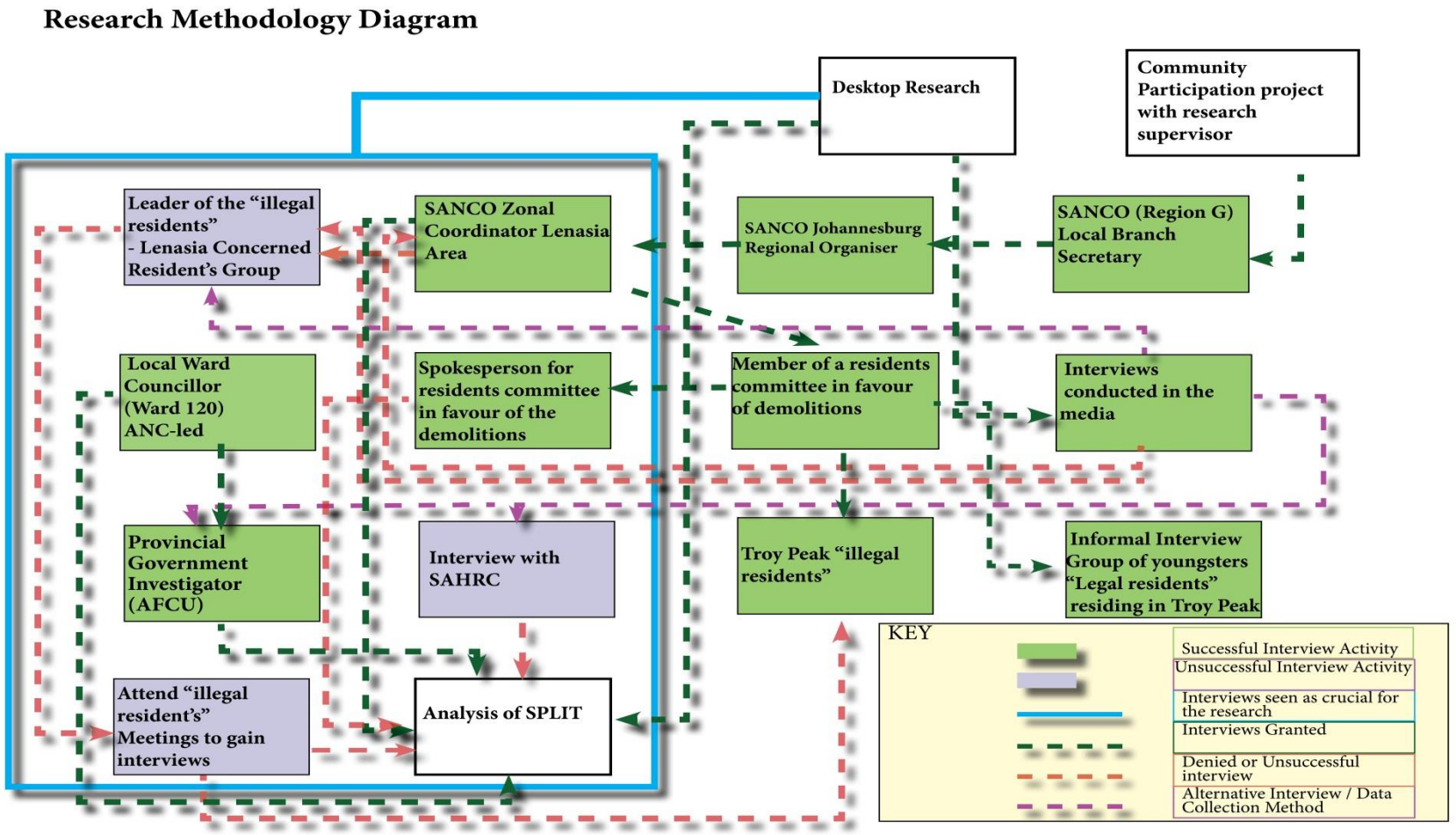

Figure 2.2 Diagrammatical representation of the research methodology

The key informants that were utilised in this research are; Paul Molutsi, Patrick Magwaba, Monde Mofokeng and Busi Hleza. Paul Molutsi is the local ANC councillor in Lenasia South extension 4, while Patrick Magwaba is the Zonal Coordinator for SANCO in the Lenasia Area. Busi Hleza is spokesperson for the Legal Concerned Resident's Association which is a residents committee in favour of the demolitions. Monde Mofokeng is an investigator employed by the Anti-Fraud and Corruption Unit (AFCU) in the Department of Local Government and Housing. The research would have benefitted from an additional key informant in the person of Lazarus Baloyi, chairman of a resident's group challenging the demolitions. Reasons for not having him as a key informant are stated below. However, Lazarus has commented quite extensively in the media and an analysis of these interviews does form part of the research. I have in the process of the research also had in-depth interviews with two other residents of Lenasia whose homes are deemed illegal by government. I had also initially intended to interview the SAHRC concerning their role in opposing the demolitions. In an attempt to reach the SAHRC, I called in to their offices to request for an interview. However, I was unable to speak to the people in SAHRC. Due to time constraints I did not pursue an interview with the SAHRC with my vigour. However, during the course of the fight against the demolitions, the SAHRC released numerous press leases detailing their actions in fighting against the demolitions. In addition to this, the SAHRC was interviewed numerous times in the media. I was convinced of the fact that all this information that is in the media (and easily accessible) provided sufficient data for this research.

The media interviews were not only useful in looking at the SAHRC but also giving insight on the other stakeholders. When the demolitions took place, media hype was created and many non-state actors, such as the National September Imbizo (SNI), the Legal Resource Centre (LRC) and the Media for Justice sprung into actions. Some of these actors recorded interviews with some victims of the demolitions and posted them either on their own websites or popular video sharing sites such as YouTube.[4] These

[4] Mediaforjustice (2012b) "Lazarus Baloyi - Chair of Concerned Residents, Lenasia" published 17 November 2012, accessed from http://www.youtube.com/watch?v=17568Jh96dM on 27 February 2014
Mediaforjustice (2012a) "Lenasia resident speaks of Housing Scam" published on 12 November 2012 accessed from http://www.youtube.com/watch?v=BYcfGUVOVqI on 27 February 2014.
Mnyani, M (2012) Interview on *Interface*, Available https://www.youtube.com/watch?v=GNIUy45gTi8
SABC Digital News (2012) "Analyst lashes out at govt over Lenasia demolitions" Published on 13 November 2012 accessed from https://www.youtube.com/watch?v=aQDnBSHxAK4 on 06 June 2013
SABC Digital News (2012) "Lenasia residents ignored government calls to vacate" published on 12 November 2012, accessed from https://www.youtube.com/watch?v=ROTHxJEGs3s on 18 August 2013

interviews and the media coverage of the demolitions also form part of the research data. Not only am I interested in what has been reported by the media but I am also interested in how it has been reported and by whom. I will seek to understand the discourses that play out in the media and their influences.

Lastly, having been a resident of extension 4 in Lenasia South for over 15 years I have acquired much insight into the area. As such, I am able to draw on my experiences of living in the area. This helped mainly with the identification of the illegal houses. I have thus drawn on some of my personal observations in the area in the analysis of the research data.

2.3 Methodological Challenges

This section details the challenges faced in conducting this research, beginning with the nature of the research to the difficulty in attaining the data required for this research. Many of these problems arise from the sensitive nature of this research. This short discussion serves also as a small contribution towards literature on "documenting the process of carrying research." As Milling-Kinard (1996, 69) correctly point out, too little attention has been given to this aspect of research.

2.3.1 Researching in environments of precariousness

Qualitative research presents many challenges which are unique to this method of carrying out research (Dickson-Swift et al 2007, 328). This is particularly true when one is researching on sensitive topics. Sensitive research is described as "research which potentially poses a substantial threat to those who are or have been involved in it" (Lee 1993: 4). This not only pertains to the participants but also to the interviewer (Dickson-Swift et al 2009, 62). As a researcher undertaking research on a sensitive topic, I needed to be constantly aware of the implications of the research on both the participants and myself. From the onset, this meant allowing respondents the opportunity to refuse to participate in the research if they felt it might endanger them in any way.

The added burden of researching on sensitive topics is that the researcher goes into the lives of participants in a time of crisis, when they are under enormous stress, and ask them to speak about their experiences (Dickson-Swift et al 2007, 330). The researcher therefore needs to be aware that when this opportunity is granted,

> *It is so much more than just signing a form to say that they are willing to offer you information, they are actually allowing you into their lives, they are telling you personal information that might be quite hard, so you need to demonstrate a certain degree of discretion, of respect, of appreciation for what they are doing 'cause the reality is that it is more than just words, it's more than just what you are going to analyse, it's their life, their experience and you need to make sure that you are aware of that* (Dickson-Swift et al 2007, 330).

The demolitions that took place did not only destroy the property that people built but it also left a sense of fear among the residents. The threat of demolition is something that stays clear in the minds of those who have been targeted for demolition. My expectations, fuelled by the extensive media coverage of the subject, were that the residents would readily welcome more coverage of the matter. However, I soon discovered that instead of a strategy of voice and visibility, the "illegal residents" were, in fact, using a strategy of invisibility.

As such, I realised that the "illegal residents" were not willing to bring to themselves any unnecessarily attention. When a researcher, such as I, comes and brings to them this unsolicited attention they were prone to reject it. This is especially so when it was understood that the research could draw further media or government attention. Even though many of the residents I sought to interview did not have their houses demolished they faced the trauma of seeing other houses being demolished. Speaking about these incidents makes them to relive these traumatic experiences. Due to these reasons many rejected the request for the interview.

Furthermore, this fear is not only shown by those who are termed "illegal residents" but also by those who defend them. There is also a fear of victimisation from those who are termed "legal residents". There has been a divide between the "legal" and "illegal" residents particularly after the demolitions. The animosity has caused some of the "illegal" residents to fear for their safety.

I felt ethically bound to disclose my residency in Lenasia South to the residents when introducing myself. But I realised that the fact that I was one of the residents classified as "legal" has caused a great discomfort from the "illegal" residents in speaking to me.

Although this was never specifically and directly mentioned as a problem by the residents I realised upon mentioning it that the "illegal residents" I spoke to became increasingly uneasy. I have found this a challenge hard to overcome in the course of the research.

Going into the fieldwork, the research aimed to understand the strategies that those whose homes have been demolished or are facing demolitions use in challenging the demolitions. Upon discovering that strategy employed by the "illegal residents" was that of invisibility as opposed to visible confrontation I realised that I might need to change the research question. The research question was at this stage centred on these residents themselves and had assumed a more visible activism, on the part of the residents against the demolitions. This required that the research take a more ethnographic approach in which I spend time with these residents and attend all their gatherings. I had hoped to gain access to these meetings through Lazarus. I also discovered that the meetings were not as common as I had thought and in the course of conducting the fieldwork no meeting seems to have taken place. Having failed to interview Lazarus and gain access to the meetings I had to change the research question to one that is less centred on these residents themselves.

Lastly, I encountered two other challenges in carrying out this research project. The first is the general sense of apathy that I experienced from the residents on both sides due to a lot of coverage without any change. This was not helped by me being a researcher seeking to bring more coverage to the matter without the promise of a solution. The question that I have had to deal with on many occasions was "how is your research going to help us?" This is a question that I have had to answer for myself before entering into the research field. The general answer given is that this research will provide clarity to this confusing situation: clarity in the issues discussed and how they can be best understood.

At the time of doing the fieldwork for the research, the matter was *sub judice* and the respondents generally expected that a solution should be reached soon. Because of the matter being *sub judice* some respondents, especially from government were, unwilling to discuss the matter. This presented challenge in trying to understand some of the strategies used by official in handling this matter.

2.3.2 Concealed or Revealed? The politics of naming

Perhaps one of the other challenging decisions I was faced with in the research was whether to use the respondents' real names or to use pseudonyms. I chose the former option. With the exception of two respondents who fall within the category of "illegal residents", the real names of respondents have been used. The decision to keep the real names of the respondents was a carefully considered one. Social science convention dictates that pseudonyms be used for cases not involving public officials (Guenther 2009, 411).

The decision to use real names was mainly based on four factors. The first being precisely because I was at times dealing with Public officials. The second, which is closely connected to the first, was that some of these respondents were identified through the media and remain accessible to anyone who wishes to find them. The third reason, which especially applies to the "legal residents", was that I saw in them the desire to tell their story; the need to have things seen from their perspective. They wanted their voice to be heard and using pseudonyms would anonymise and deny them their voice (Guenther 2009, 413-414). Lastly, upon reflecting on the field-work I came to the realisation that, with the exception of one case, there was an implicit understanding that the respondents' real names were going to be used. Confidentiality was always discussed in the context that the information gathered would not be divulged to anyone but the researcher's supervisor until the report has been written.

In addition to this, I was under the conviction that using the respondents' real names, with the knowledge that this report will be made accessible to anyone who wishes to read it, would make me more sensitive to how I use the information. Anonymising respondents opens the researcher to the risk of recklessness "in the form of excessive candour" in research reports (Guenther 2009, 413).

Having looked at some of the challenges brought about by the nature of the research, I will now look at some of the challenges that were further encountered in the field.

2.3.3 The Interview that never happened

It was my intention at the beginning of the research project to have an interview with the leader or spokesperson of the Lenasia Concerned Residents Association. This is a group consisting of residents whose homes have been demolished or are facing demolitions as

well as their sympathisers. I had identified Lazarus Baloyi as the person to speak to.[5] Lazarus is a leader of this association and his home was also targeted for demolitions. In one interview with the media, Lazarus identified himself as one who is also "being affected" by the demolitions.[6] I later learned through one of the respondents, Monde Mofokeng (AFCU investigator), that it was at Lazarus' home that SANCO formed a human shield in order to prevent his house from being demolished.

Prior to doing the fieldwork, I had followed many of Lazarus' interviews and comments in the media. Due to his willingness to speak to the media I did not foresee any problems in getting him to speak to me. Lazarus has been very active in challenging the demolitions and would have been a key person to interview. However, locating Mr Baloyi and having an interview with him proved to be a great challenge. My first strategy was to contact Lazarus using his contact details I had acquired from joint press release and from other websites that listed him as a contact person. I was at first able to reach him on his cell-phone but could not communicate due to some technical problems. I then sent him a short message introducing myself and the research project and expressed my desire to hear from him soon. After a few days not having heard from him I then tried to call him again. My call was diverted to his voice mail and I left a message. I tried reaching him several times this way, and with different cell-phone numbers but only managed to reach his voice mail. I then felt the need to try other avenues to contact him.

Lazarus is often interviewed by one journalist who regularly covered the developments after the demolitions.[7] The journalist seemed to experience little difficulty in reaching Lazarus as he has him as a respondent in a couple of his articles. I then contacted the journalist through email in the hope reaching Lazarus. Several emails were sent without any reply. This could be due to two reasons. Firstly, it could be that the journalist is not interested in giving out contact details or the physical address of his sources, even if the sources are named. Secondly, the email supplied belongs to the newspaper. I noted that

[5] Baloyi and the Lenasia Concerned Resident's Association (LCRA) were identified through a joint press release by COSATU, SACP and SANCO and the LCRA. SACP (2012) "Joint press statement of the Gauteng SACP, COSATU, SANCO and Greater Lenasia concerned Residents Association on the demolition of residents houses in Lenasia" accesed from http://www.sacp.org.za/main.php?ID=3786 on 27 May 2013

[6] Mediaforjustice (2012b) "Lazarus Baloyi - Chair of Concerned Residents, Lenasia" accessed from http://www.youtube.com/watch?v=17568Jh96dM on 27 February 2014

[7] See, Mafisa, I (2013) "Low-cost housing construction to start in Lenasia" in *The New Age* accessed from http://www.thenewage.co.za/mobi/Detail.aspx?NewsID=79475&CatID=1008 on 07 February 2014

the journalist is a free-lance journalist and might not have access to the newspapers email most of the time. I also tried to locate his place of residence through some of the people I interviewed, much to no avail. There existed among the victims of demolitions a great hesitancy to reveal names of leaders and those involved in the organisation. I believe this is mainly because as a researcher, I am also perceived to be an 'investigator.' Due to this perception people who can easily be victimised are less prone to speak to me.

2.4 Accessing the State

In the demolitions that occurred, the state remains the key player. It was the state that executed the demolition and then it was the state that undertook the task of resolving the turmoil that followed. It was thus important that the research considers the actions of the state.

The modern state has its basis on the notion that any society requires the existence of a single, unified authority that will be tasked with ensuring the greater good of the entire population. This authority is to be permanently operational and base its authority on the undivided loyalties of its population (Dryzek and Dunleavy 2009, 2). States have manifested themselves in different forms and have adopted different manners of operation. In modern times, liberal democracies have become the dominant and most prevalent form of governance. This form of democracy has, among other things, been characterised by decentralisation. In South Africa, decentralisation has been manifested in the three 'spheres of government' (van Wyk 2012, 288). This provides for the existence of National, Provincial and Local governments. I sought to feature two of these spheres in the research, primarily, the Provincial and Local.

The decision to feature these two spheres of government was mainly due to the role that they each played in the demolitions. The land in question belongs to Provincial government and it was thus Provincial government that carried out the demolitions. All these things, however, had an impact on the Local level and I was therefore interested in the interaction between the Local and Provincial level.

2.4.1 The Ward Councillor – Paul Molutsi, Ward 120, ANC-led

The Local Councillor remains the face of government at the local level. The establishment of the Ward Councillor was an attempt to bring government closer to the people. The Ward Councillor is elected through municipal elections that take place every

five years. Much of their work goes looking at the needs of the constituency which they serve and attending to them. However, they function in an environment of limited resources and power (Bénit-Gbaffou 2008, 28). It is however through the councillor that people at the grassroots are meant to first encounter government structures. The voice of the local councillor is important as the local councillor would theoretically be more of aware of the issues at play and the environment in which they were created. The local councillor also becomes the contact person in seeking to government structures. It is for reason of the councillor's positioning as a representative of government at the local level and his continued role in the seeking of a solution that I sought to speak with the councillor.

In making the appointment with the councillor I called him and briefly told him about my research project over the phone and requested for a meeting. He agreed to the meeting and asked that I should speak to his secretary about it. The appointment was set for the morning of 18 November 2013. When I arrived on the day, I found a group of people all waiting to see the councillor; most of them were young people between the ages of 17 and 25 years. I waited while the councillor attended to one young person. I then went in and introduced myself and reminded him that I had made an appointment to speak with him. He quickly remembered the appointment and finished signing off some of the documents that were on his desk. He then led me to his actual office where we were to hold the interview. Some of the young people that were there followed him to wait until he was available. People from the community generally do not make appointments when coming to see the councillor, they simply present themselves. The councillor asked me to allow him to finish with a group of young people who had come there to request for a recommendation letter before he could attend to me.

Realising that the councillor is a busy individual I allowed him to do what he had to do so that our interview could take place with very little interruptions. I asked for an hour with him and he agreed, though with great reservation. He was worried that this would take him away from his job for too long. I could sympathise with this concern as there were still a few more people waiting in line to see him. The interview with the councillor went on with very little interference once it took off. The councillor provided much insight on his position in the matter and how things were to proceed in his understanding.

As per my usual practice with key respondents, I promised the councillor a transcript of the interview pending a second interview. I did accordingly and left the transcript with him to read. We met for our second meeting in his office some few weeks later. I asked him about the transcript and he did mention that he has some concerns regarding a few sentences. However, these were mainly concerns about sentence structure and grammar. This usually results from a strict word-for-word transcription of the interview. I assured him that I will ensure correct grammar usage whenever I use direct quotations. He was entirely satisfied by this. We then continued with a short interview afterwards.

2.4.2 The Provincial Government – Monde Mofokeng

As previously stated, the land in question belonged to Provincial Government and it was it that carried out the demolitions. The government's direct role in this matter is therefore centred on Provincial Government's actions. Due to this, the research would be greatly enriched by Provincial Government officials' participation in the research. However, I envisioned two difficulties in getting an interview with a respondent from Provincial Government. The first is due to the fact that the demolitions have recently taken place and the matter has not yet been resolved. Secondly, I thought that the heavy criticism which Provincial Government faced would make them reluctant to speak on the matter. The issue is a contentious one for government and they would want to tread softly in dealing with it. This also includes the leaking of confidential information. In spite of these concerns I pursued for an interview at the Provincial level. I was ultimately granted an interview with Mr Monde Mofokeng. Monde works as an investigator in the Anti-Fraud and Corruption Unit (AFCU) in the Department of Local Government and Housing.

The interview with Monde Mofokeng was the last interview to be conducted and it occurred at the point when I was concluding the fieldwork. The interview took place on the 17th of February 2014. I had, at this point, almost given up hope of securing an interview at the level of Provincial Government. I had identified Mr Motsamai Motlhaolwa as a possible contact person at Provincial Government. Motsamai is the Media Liaison Officer for Gauteng Local Government. In this capacity he has given out various media statements regarding the demolitions. I hoped that he would be more willing to speak to me in this capacity. I obtained Motsamai's contact from the Department's website and sought to make contact with him. I called up the numbers that I had received but the phone was not answered on numerous occasions. I had also spoken

with the Ward Councillor of Ward 9 in Lenasia who promised to get me in touch with someone at Provincial Government. This, however, did not materialise. Without further persistence I had but given up on reaching Motsamai or anyone in the Provincial office.

It was in the last meeting with Molutsi that I decided to ask him to refer me to someone at Provincial level with whom I could speak. I felt at this stage that I had gained some level of trust with him and that he was not suspicious about my intentions. The Councillor then recommended two individuals to me and then proceeded to give me their contact details. I then did some research on these individuals in order to find out who they were and the work they do. After this research I then determined that Monde was the person I would like to interview. Both the individuals are involved in investigations within the Department. Monde was ideal because his work required a more direct relationship to Lenasia and its immediate surroundings. The illegal sale of government land made up much of his workload. I felt that Monde's input as an investigator in the case would greatly enhance the research.

The Councillor suggested that it would be best if I called the person I wanted to interview prior to me visiting their office. However, he warned me that I might face some difficulty in reaching them over the phone. I kept this in mind as I contacted Monde. However, it was at the first attempt of contacting Monde that I managed to speak to him on the phone. I briefly introduced myself and the research project. I then made him aware that I have been speaking to Councillor and that it was he that recommended me to him. I then requested for an interview with him. He indicated to me that he would need to speak to the Councillor first to confirm that he does indeed know me before granting me an interview. Monde was concerned that I was not a journalist pretending to be a student in order to gain confidential information from him. He promised to get back to me as soon as he had spoken to the Councillor to confirm my identity.

After a few of days of not having heard from him, I decided to contact him again. He apologised to me for not having made contact. He informed me that he would not be able to have the interview as yet since he was out of office as he was attending a course. I would have to wait for another week before I could have an interview with him. I then waiting for him to return to office and contacted him on the morning of his return. He asked me to allow him to finish off some work that had accumulated while he was away and he would contact me when he gets time to speak. He called me later on the day to tell

me he would be in Lenasia the next day and that I could meet up with him after he has completed his work there. We agreed to meet outside of the civic centre in Lenasia South when he was done with his work for the day.

Upon completion of his work I met with him at the parking lot of the civic centre. He invited me into his car where the interview was to take place. I reintroduced myself and briefly explained what the research is about. The issue of me being a resident of Lenasia South came up in our introductory discussion. Monde was primarily concerned that I was not one of the "illegal" residents. Due to his work of investigating these residents, he felt it would be highly unethical for him to be speaking to one of them. Secondly, he felt that doing so could endanger his life as he could be targeted by the "illegal" residents. Monde also mentioned that some of those culprits of the illegal sale of government land grew up with him in Soweto. In order to protect himself he also refused for the interview to be recorded. The refusal is also driven by the fact that the matter is still under investigation and some matters might still be *sub-judice*. As such he would not want to go on record for having said them. Although I was a little discontent with this arrangement I understood his reasoning and his circumstances.

Before the commencement of the interview Monde insisted on knowing my opinion on the matter. This would then guide him in how to proceed with the interview. I was well aware that my response to this could shape the nature of the interview. Seeking not to place any bias on the interview I made him aware of some of the concerns I had without necessarily siding with any section. Many of my respondents would wish to know my opinion on the matter before getting into any detail. My concern was always to present objectivity in order to hear the truth from them as they see it. It was important for me to allow them the space to do so without necessarily "cuing" them into giving the "acceptable" response. In my response to Monde, I stated that, as a resident I was concerned about the apparent illegal activity taking place in my neighbourhood. However, I was taken aback by the manner in which government handled the demolitions, or at least, the manner in which it has been portrayed in the media. I then expressed my wish for him to clarify how the decision to demolish came about and if they had considered other avenues. It was after I had given my response to Monde that the interview began in earnest.

Monde gave a brief overview of the history behind the vacant stands in Lenasia extension 13, Lenasia South extension 4, Lawley and Ennerdale. This also included a brief history of the illegal activity that began to take place. This brief history ushered in a conversation about the demolitions and the current state of events. I had deemed this interview to be very important and I knew that the respondent would provide some important information. Perhaps more than other interviews I listened more attentively to the interviewee knowing that I will not have the benefits of the audio and transcription to refer to back to. A made a lot of notes on this interview, at times asking him to repeat things so I can get some direct quotations. At times I realised he was considerate enough to slow down in order to allow me to finish writing some notes.

Monde then offered to take me on a tour around extension 4 to show me some of the things he was speaking of. While he was well aware that I was familiar with what he was speaking of he felt the need for this tour. The tour was meant to highlight some of the difficulties that the Department is faced with. Monde pointed to the many illegally built houses and the different socio-economic standings of the people. He often argued that government did not demolish out of cruelty but because it needs to act out against crime. After this short tour we concluded the interview with him dropping me off at home.

2.5 The Residents

This next section looks at the interviews conducted with people who have perhaps been affected the most by the demolitions, the residents. This section not only looks at interviews conducted with the victims of the demolitions but also looks at residents in favour of the demolitions. I begin by discussing the interview with the residents in favour of the demolitions. This is then followed by a discussion of the interviews conducted with residents affected by the demolitions and those challenging them.

2.5.1 Busi Hleza

I came in contact with Busi Hleza through the help of Patrick Magwaba from SANCO. Patrick supplied me with the contact details of Puseletso who is a member of "People Against Illegal Land Invasion", a residents' committee in favour of the demolitions. I requested to have an interview with Puseletso and she granted me the interview. However, the interview would be with their spokesperson, Busi Hleza. I was entirely happy with this arrangement because of the assumption that spokesperson would be more knowledge and more involved with such matters. For matters of accuracy and a more

informed interview I thought it important that the interview with Busi Hleza took place. Busi is a retired lady in her 60s and a respected member of the community. I suspect her election as the spokesperson had much to do with her age. There still exists within the Black and Indian community a respect for the elderly. This respect is also coupled with a strong belief in the wisdom of the aged. The interview took place with Puseletso being present in Busi's home in Troy Peak Street. Busi lives directly opposite a vacant plot of land where the houses in question have since been built. This, in part, explains the passion that Puseletso, Busi and others in this neighbourhood have towards the demolition of these houses.

Before the interview took place, Busi and Puseletso related to me some of the efforts they have made in order to get the matter resolved in their favour. These include legal avenues such as going to the Wits Law Clinic and other methods such as engaging in protest action. They wished to know how I would help them in the matter. I made it clear to them that I cannot offer them much other than to try and bring clarity in this otherwise confusing situation. I went on further to explain that I have as much interest in clarify the matter as they do since I too am a resident of Lenasia South. I sensed that my residency in the area made them more open to speaking and having the interview. It is after a brief discussion about me and my upbringing and schooling in the area that the interview with Busi Hleza took place.

The interview was completed with me promising to give Busi a transcript of the interview and a second interview to follow. After transcribing the interview I then took it to her and left it to her to read it. I then contacted her a few days later and we discussed the transcript. She commented that I had captured everything very accurately in the transcript and that the transcript was a true reflection of what had transpired in the interview. She then promised to contact me should there be any changes.

2.5.2 Residents living under the threat of demolition

In the research I also interviewed some of the residents whose houses are deemed illegal by government. I went to interview these residents after I failed to interview their chairman. Being a resident in the area I could easily identify these houses. There are two main distinguishing characteristics; date and style of building. The latest houses to be built in Lenasia South extension 4 were bond houses built mainly in the mid to late 1990s. They were mainly built by two construction companies who used similar building

plans and architecture style. As a result, many of these houses look very similar. In addition to this, residents have made major improvements to their homes. Virtually no building activity took place in the area for a decade after this. From as early as 2009 building activity began to resurface in numbers reaching its peak in early 2012. These houses do not take the building shape of the other houses in the neighbourhood and are often of significantly lower built quality. Figure 2.3 below shows a contrast between the two types building types. The two images show different sides of the same street. The image on the left is of houses belonging to the "legal residents" while the image on the right depicts houses belonging to the "illegal residents."



Figure 2.3 Image portraying different building types that occur between the "legal" and "illegal" residents. Source: Molopi 2014

I seeking to interview the owners of these houses, I adopted a random door-to-door approach beginning in the area where the demolitions took place. I experienced great difficulty in getting the residents to speak to me. I initially went to four homes. In two houses I was plainly told by those I encountered that they were not interested in speaking to me or being part of the research. In the two other houses the respondents did not express an unwillingness to speak, but showed great distrust towards me. The answers given were very vague and in one case false information was given. Considering the fact that this is the site in which the demolitions occurred, the apprehensive welcome I received is quite understandable. I soon realised that my stay on this site might not be very productive towards my research. I then left it to explore another site. It is at this time that I went to speak to residents

2.6 Opposing the Demolitions

The previous section dealt with interviews in favour of the demolitions ending with residents under the threat of demolitions. This next section deals with those opposing the demolitions. To this end I look at the "illegal residents", SANCO and the SAHRC.

2.6.1 The "illegal" residents of Troy Peak

I became in interested in Troy Peak after speaking to Busi Hleza. The interview brought to my attention the activeness of the Troy Peak residents in supporting the evictions and calling upon further demolitions. In looking at the contentions that are happening, the voices of those who challenged residents became crucial. I then sought to have an interaction with these residents. In seeking to obtain an interview, I applied the same door-to-door method applied earlier. I was aware that this strategy might yet fail me. However, I was more hopeful this time around due to the fact that I had spoken with the residents in support of the demolitions. My strategy was that I would present my research to these residents and let them know that I had spoken with some of the "legal residents" who have complained about them. This I would do without mentioning any names or specifics of the people I had interviewed. I hoped that giving them this information would cause them to be open to presenting their view.

This strategy worked well in attaining my interview with Miriam Sibiya who lives in one of the questioned houses in Troy Peak. Sibiya house is comprised of three separate rooms conjoined to make one structure. They rent out one of the rooms to another but claim that

they do not make them pay for it. They did them this favour because the family had done them a favour prior to them moving in. Sibiya remarks:

> *"They requested to stay here and look after the house for us, we had no issues with that so we allowed them to stay. So when we came to stay here we then offered them this place and told them they could stay for as long as they need to find an alternative accommodation*" (Sibiya 2014, Personal Interview)

Sibiya moved in with her husband in early 2012. After the interview Sibiya suggested that I speak with one of her neighbours who has been living in the area for much longer than she has and is more knowledgeable about the issues at hand. I then took to this task and went to interview the family. They agreed to speak to me on condition of anonymity and refused for me to record the conversation. The interview was nonetheless fruitful and productive.

2.6.2 The Role of SANCO

Patrick Magwaba is the Zonal Coordinator for SANCO in the Lenasia Area. Due to this role he was assigned, together with a colleague, Stephen Simelani as SANCO representative in SPLIT. I came in contact with Patrick through the help of Executive Mukwevho who is the Local Branch Secretary of SANCO in Region G of Johannesburg. I had interviewed Executive earlier in 2013 for a different project on Community Activists (Bénit-Gbaffou 2013). Since then he and I have maintained a good relationship. When I became aware of SANCO's role and interest in the demolitions I then realised that I would have to speak to them.[8] It was important for me to speak to someone who was actively involved in the matter and preferably residing in the area. At this stage of the research I did not know if there was such a person. However, I hoped that Executive would be able to assist me.

I immediately gave Executive a call and briefly told him about this research work. I then asked for his assistance in identifying a person within SANCO I could speak with. He then suggested that I should speak to Thomas Thaga who is SANCO's regional coordinator. Executive then provided me with Thomas's contacts and advised me to

[8]The South African Broadcasting Commission (2012) "Sanco to form human shield to stop more Lenasia homes being destroyed" accessed from http://www.sabc.co.za/news/a/1231b0004d69de8e9938f9e570eb4ca2/Sanco-to-form-human-shield-to-stop-more-Lenasia-homes-being-destroyed--20121111 on 13 March 2013

mention to Thomas that he had given me his numbers. Thomas had given numerous interviews to the media regarding this matter and SANCO's efforts. I called Thomas the next day, I quickly introduced myself and gave a description of the research. I then asked if he was willing to have an interview with me to which he obliged. Thomas operates a metered taxi just outside of the university. We then agreed that we would meet outside of the university after a couple of days. On the day of the interview I met with him as agreed and we went into his car to conduct the interview. There were two other gentlemen with us in the car when the interview took place. Thomas went on to expand on the demolitions as per SANCO's perspective. The emphasis came to be on the human shield that SANCO formed and the symbolic meanings attached to it. I explore this further elsewhere in the research.

At the end of our meeting with Thomas, I then asked if he could recommend someone who was on the ground working with the people either in Lenasia or Lenasia South. He then recommended to me Patrick Magwaba and proceeded to give me his contact details. Thomas then stressed the importance of me mentioning his name when I do get in contact with Patrick. I expound on this insistence of mentioning names in the next section ahead. I ensured that I did this when I first got in contact with Patrick. I then set up a meeting with him in his neighbourhood of Five-to-five. Five-to-five is an informal settlement neighbouring extension 1 of Lenasia South. Upon meeting, Patrick once again checked if I was referred to him by Thomas. We then proceeded to have the interview as scheduled. He mentioned that as SANCO they were not entirely satisfied with the process that has been made. He informed me that should the situation deteriorate that they would not hesitate to engage in protest action. I then requested to be informed should SANCO and the residents decide to engage in protest action. No such action took place until our second meeting.

I requested a second meeting with Patrick in order to follow up on the first and get any updates that might have occurred. The two meetings were eight weeks apart and I thought there might have been progress in the matter. I asked Patrick to reiterate some of the main concerns of SANCO in order to get this on recording. After which, I asked if there has been any progress in the matter. He responded by saying that there has not been

any change and that the firing of minister Sexwale had hampered progress.[9] We then proceeded to look at other issues of concern in the matter and what SANCO sought to accomplish. After out meeting I promised him a transcript of our interview and that we will discuss matters further after he had seen and read the transcript. After finishing the transcription I then handed it over to him to go over. I called him three days later to see he had gone over the transcript and if there were any issues that we need to discuss further.

2.6.3 The South African Human Rights Commission

As indicated earlier, I was unable to secure an interview with the SAHRC. However, the SAHRC has issued out press releases documenting their involvement in the Lenasia dispute.[10] In addition to this there SAHRC has been featured in various media interviews that covered the demolitions.[11] The combination of these resources provides some material to assess the role of the SAHRC in the demolitions.

2.7 Conclusion

In this chapter I discussed the methodology adopted in carrying out this research. I discussed in depth the challenges encountered in conducting the research and how they were overcome. The sensitive nature of this research presented some unique challenges to the research. Among these challenges was the ability to locate and interview people who have been personally affected by the demolitions. I had to employ various networks and strategies to ensure that I was able to gather data necessary for the research.

Much of this was dependent on how I presented myself to the respondents. While it was important to me to remain as objective as possible, I realised that I was not always perceived as such by my respondents. As such, I at times felt compelled to show a visible sympathy towards my respondents and the positions they held. This was particularly difficult to achieve when the respondent made remarks that were specifically meant to delegitimise a stakeholder in the demolitions. Throughout this process I can to the realisation that the nature and content of the interview can be altered by the way in which

[9] Tokyo Sexwale was fired as the Minister for Human Settlements by President Jacob Zuma in the president's "reshuffling of parliament" and was replaced with Connie September. See du Plesis (2013) "Zuma fires ministers Sexwale, Pule and Baloyi" in *City Press* accessed from http://www.citypress.co.za/politics/zuma-fires-ministers-sexwale-pule-and-baloyi/ on 09 September 2014

[10] SAHRC media statements can be accessed here: http://www.sahrc.org.za/home/index.php?ipkContentID=109&ipkMenuID=91

[11] See for example, Interface: Lenasia Demolition, https://www.youtube.com/watch?v=GNIUy45gTi8

the interviewer respondents to remarks made by the respondent. It is thus important that the researcher is aware of these "cues."

Lastly, it is in conducting the fieldwork that some of my assumptions regarding the actions of the "illegal residents" were challenged. I had not foreseen some of the strategies used by these residents prior to conducting the fieldwork. The residents adopted stealth and invisibility as a strategy when I had envisioned a more visible and perhaps confrontational stance. This then required a different strategy from me in acquiring data for the research. I further realised the importance of connection in setting up interviews.

The next chapter discusses the various threads of literature that were employed in this research.

Chapter 3 A Review of the Literature

In this chapter I consider parts of the literature which I chose pertinent to this research. Different threads of literature are assessed as they serve different purposes. In the first section of this chapter, I begin by looking at the literature on legitimacy. In doing this I establish the inadequacy in the concept and argue for the concept of legitimation in its stead. I also look at ways in which these concepts have been applicable to this study.

The second section looks at literature concerned with access to land and housing in South Africa. It considers the various ways in which the poor can gain access to land. One of the ways considered is urban poor mobilising themselves to gain access to housing. I also consider some literature on aided self-help. The reason for this is that, there have been calls, however not prevalent, to assess the illegal selling and buying of land in Lenasia as a form of self-help. The call is then for government to help these residents as opposed to acting against them. In this section I there look at some of the ways in which self-help programmes have work. I also consider an aspect of literature which will explain the opposition by some residents to this development. This presents itself in the form of the suburban ideal.

In looking at this claims that are made, I then proceed to look at the understanding of claims and the "right to the city." The right to the city is considered especially because it provides a context in which claims can be articulated.

3.1 On Legitimacy and Legitimation

My interest in the concept of legitimacy was awakened by the various ways in which the stakeholders in the Lenasia demolitions sought to "legitimise" themselves and discredit the actions of others. This manifested itself when the state's actions were questioned and by the state defending itself. This was also seen by the state's treatment of the "illegal residents." The place of these residents as "legitimate" residents has also been questioned by government. Looking at these facts, I saw the concept of legitimacy as one of the concepts by which we can analyse and understand the Lenasia demolitions. My interest was initially on the concept of legitimacy – ways in which it is formed and employed. However, it was in my study of legitimacy that I developed an understanding of legitimacy as being "situated" and in a constant state of formation and maintenance. It can thus be best understood as a process. This understanding of legitimacy is better

captured by the concept of legitimation and delegitimation. This section articulates this understanding and its application to the case of the demolitions in Lenasia.

The concept of legitimation and delegitimation is one that has been poorly studied in the social sciences. What has been studied to some degree is the effect that this concept has once the processes have taken place, particularly as it relates to power (Berger et.al 1996, 379). However, before I begin to expound on legitimation, it is fitting to have a brief overview of legitimacy and its formulation. This is primarily because legitimation, as a concept, is derived from legitimacy. The concept of legitimacy is one that has been broadly studied. However, the use and study thereof in the social sciences is often vague and ambiguous (Connelly et al. 2006, 267).

3.1.1 The concept of legitimacy

There are different understandings of legitimacy as there are different professions concerned with the concept. Legal experts, moral or political philosophers and social scientists all present different conceptions of legitimacy and its use. For legal experts, legitimacy is equivalent to 'legal validity', thus for legal experts the legitimacy of power is measured by its conformity to established law. Beetham (1991, 4) sees this 'legal validity' of power as a first condition for legitimacy.

However, Jacobsen (1999) argues for a different view on 'legal validity' and legitimacy. In this view, legality and legitimacy are kept separate as opposed to the former being seen as a first condition for the establishment of the latter. It is acknowledged, however, that the two concepts do at times overlap. The separation of the two concepts is due to the fact that certain practices and norms may be considered legal by the law yet be considered illegitimate by others. As a way of example, it is considered legal in South Africa for a man to marry many wives. Polygamous marriages are legally recognised. However, many sections of the South African population regard this practice as an illegitimate practice. The opposite is also true; an act may be considered illegal in law yet remain a legitimate practise for others. For example, in some countries it is illegal to discriminate persons according to their race, age or gender. However, some companies within these countries might think this discrimination a legitimate practice to engage in, despite it being illegal (Jacobsen 1999, 256).

This distinction between legal validity and legitimation may also be applied to South Africa particularly as it relates to land invasion and evictions. Land invasion in South

Africa remains illegal but might be considered legitimate in certain circumstances. Conversely, land eviction might be considered legal but illegitimate in a post-apartheid. While these examples clearly demonstrate a distinction between legal validity and legitimacy, this distinction is at times blurred. This is particularly true when the former is used to try and influence on the latter. The case of the demolitions in Lenasia demonstrates this very well. This can be seen where the state sought to use the legal validity of the demolitions to foster a perception of the demolitions as being legitimate. In seeking to justify their actions and create a sympathetic public opinion to the demolitions, the state often made reference to the legal processes they engaged in order to proceed with the demolitions. Thus, while it is necessary to recognise the distinctness of legality and legitimacy and perhaps keep them separate, it is also necessary to accept the huge impact that legal validity has on a practise or norm being accepted as legitimate.

However, in the contest for legitimacy, the law itself can be called into question, often this is achieved by questioning if it "conforms to moral or political principles that are rationally defensible" (Beetham 1991, 4). This is the sphere in which moral and political philosophers function. To the moral philosopher legitimacy should be morally justified by rationally defensible normative principles (Beetham 1991, 5). This position makes a call to human reason and rationality in the use of legitimacy. The call to rationality entails in it a universalising claim, as such, what is deemed legitimate by one society should be upon unbiased rational consideration be agreed upon by another society (Beetham 1991, 5).

Social scientists on the other hand concern themselves with identifying and explaining the empirical consequences that legitimacy exerts within society. For social scientists, legitimacy is considered within the context in which it is presented. What occurs in one context may not be applicable for other contexts, as such; legitimacy is not formulated by universal principles it is rather constructed by the local reality and context (Beetham 1991, 6). Social scientists are of the opinion that the beliefs that people hold are a product of cumulative influences and these influences are not universally applied (Beetham 1991, 8-9). It is this approach to legitimacy that I find most persuasive and that will be developed further by this research.

According to Beetham (1991) and Connelly et al. (2006, 270), legitimacy embodies three distinct elements which are all important: Conformity to established rule, justifiability

and the evidence of consent. Any action, norm, claim or speech that power makes or takes part in, stands to be legitimate when it is exercised within the established rule. This, in effect, means adhering to an already existing legal code which does not always have to be written down but can occur as informal conversations (Beetham 1991, 16). But this legal element, as previously stated, is itself not sufficient because it too needs to be justified. Power should be justifiable through shared belief from both the dominant and the dominated and must be seen to be of reciprocal benefit (Beetham 1991, 17). In addition to this, there needs to be evidence of consent from the dominated. This evidence of may be expressed through actions which provide evidence of consent such as voting in an electoral democracy.

The evidence of consent or the willingness to obey can in itself be a result of legitimacy since legitimacy brings about an increased likelihood to comply with government rules and regulations (Levi et al. 2009, 356). Legitimacy does in this way make it easy for government to rule without necessarily relying on coercive force. The reduction of the need for coercive force makes it easier govern and renders governance less costly. Without legitimacy, governments have to use a lot of resources and coercive power to ensure that the rules they set are complied with (Levi et al. 2009, 355). It is this need for compliance without costly measures that bring about the need for legitimacy for government.

The obligation or willingness of citizens to comply with the rules set is here understood as 'value-based' legitimacy. The actual compliance with the regulations and laws is understood as 'behavioural legitimacy' (Levi et al. 2009, 356). Behavioural legitimacy results from value-based legitimacy. Value-based legitimacy is dependent on two conditions, namely, trustworthy of government and procedural justice. Trustworthy of government hinges upon: government performance, administrative competence as well the motivations put forward by the leader (Levi et al. 2009, 356 – 359). Procedural justice concerns itself with the fairness of government procedure in various situations. Fairness in government procedure is likely to bring about the recognition of legitimacy. In the case of the Lenasia demolitions, the element of procedural justice was questioned by those who opposed the demolitions. The actions undertaken by government in the demolitions were viewed by those who opposed the demolitions as not being fair.

The research will explore this contestation of legitimacy in the Lenasia demolitions. Other aspects of the concept that will be explored are the interplay between legal validity and legitimacy in the context of the demolitions. The research will further investigate the ways in which different legitimacies were articulated in the demolitions. The next section will consider how other actors, outside of the state, garner legitimacy. Particular reference will be made to civil society.

3.1.2 Legitimacy of non-state actors

Legitimacy is not only limited to authority but it also extends to entities that seek to engage with the existing authority. In this sense authority does not itself seek to be seen as legitimate but it becomes a legitimising agent. Various entities might seek to claim themselves as legitimate through various processes of engagement with authority. Civil society organisations offer some examples of entities that might seek recognition of legitimacy from government. Not only do civil society organisations have to seek recognition of legitimacy from government but their legitimacy is also to be demonstrated to those they claim to represent (Houtzager & Gurza Lavalle 2010). Often this legitimacy to the broader public is achieved through confrontation with government and denouncing its actions as illegitimate. Democratic governments will often rely on the votes of their constituency for legitimacy. This is often not the case for civil society organisations which often do not exist through electoral processes (Houtzager & Gurza Lavalle 2010). In order to legitimise their existence, civil society organisations will, among other things, rely on the results they produce. In part, these results are due to the strategies that civil society organisations employ in their interactions with government. I will hereby focus on these strategies. This is a concept that will be immediately dealt with in the research. Not only will I be looking into how these entities seek legitimacy from government but also from the general public.

In their interactions with the state, there are various ways in which these civil society organisations articulate their claims. Some of the strategies involve antagonism toward the state while others resort to cooperation with the state. This point is explored by Roy (2009) in which she considers two groups, Hezbollah which is a militant organisation concerned with the well-being of poor Lebanese citizens and the Society for the Promotion of Area Resources (SPARC), an urban NGO in the city of Mumbai. These organisations differ vastly in their methodology in making the claims of recognition and

demanding inclusion in societal processes. Hezbollah employs a lot of violence and antagonism in articulating these claims. SPARC on the other hand tends to favour cooperation with those it wishes to interact with (Roy 2009, 161-163).

In a similar vein, Chatterjee (2004) relates the story of the railway colony which emerged sometime late in the 1940s. His narrative, brings to the fore a story of a people who mobilise themselves and occupy land illegally. There is initiative from a couple of people, four or so, who provides for the housing needs of those concerned. In the early stages of the settlement a single person would own land and rent it out to people. Due to their status as illegal occupants the people as an entity began to mobilise to get the recognition and the services they require (Chatterjee 2004, 56). Because they operate from an illegal platform they are not given the same status as other civic organisation (Chatterjee 2004, 59). The legitimacy conferred upon them (or the lack thereof) affects the nature of claims they can make. The position and status that some people or group occupy affect the claims they make and the legitimation strategies used.

There is recognition among the residents in the rail colony of their destiny being tied one to another. This sense of oneness has brought about greater participation among them and the ability mobilise efficiently. The railway colony has had to fight of attempts of evictions on several occasions. There was an attempt by the railway engineers in 1965 to build a wall to encircle the settlement. The residents responded by setting up a human wall composed by women in front to prevent the trucks carrying materials to enter into the settlement (Chatterjee 2004, 54). The successful resistance of the residents to the threat brought about a sense of security and allowed for them to make greater claims to the land the settled on. Past victories were thus used as a legitimation strategy for further gains.

The cases stated above illustrate the different strategies for engagement that civil society organisations employ in engaging with government. They also illustrate the different levels of recognition that the state gives and how this alters the method in which the organisations engage with the state. These different strategies of engagement can be witnessed in the case of the demolitions in Lenasia. The different civil society organisations involved in opposing the demolitions have each undertaken a different form of protesting against the state's actions. All these actions challenge the legitimacy

of the actions of the state; challenging the notion of the state's legitimacy being fixed. This next section considers this aspect of legitimacy not being fixed.

3.1.3 Legitimation

As stated earlier, the research presents an understanding of legitimacy as being given and constantly constructed by actors within a specific context. Legitimacy is here understood as process rather than it being fixed. In line with this view, I suggest the use of the term 'legitimation.' In the next few paragraphs I will outline this understanding of legitimacy. In doing this, I will also argue more forcefully for the use of legitimation in the stead of legitimacy. This will also lay out a proposed understanding of legitimation.

The daily interactions that bring about the process legitimacy, or the legitimation process, occur within a specific context. This gives rise to what Connelly et al. (2006, 267) term s*ituated legitimacy* which is a legitimacy given and validated by actors in a specific context. Furthermore, it is a legitimacy that is "continuously constructed through discursive processes" (Connelly et al. 2006, 267). Different contexts bring about their own locally accepted norm of practice. In order for the process to result in legitimacy it has to have a consensual validation from others who among themselves construct a local reality from which these concepts become normatively enforced (Wagner and Berger 2002, 60). However, this is not to say that there is a consensus among the locals. Among locals, each stakeholder can bring about an alternative interpretation of the norm or a different norm altogether (Connelly et al. 2006, 270). There is thus a constant engagement among the locals over which norm is to prevail.

Following from Connelly (2011, 930) I argue that legitimacy cannot be taken as already existing but should rather be seen as being constructed "in and through specific processes of governance." The natures of these processes are best understood when studied from the context in which they occur. Furthermore these processes may result out of informal practices that fall outside of the realm of formal institutions. These informal practices may be agreements between local actors that a particular practice is productive and useful. They are governed by "a number of tacit, unspoken norms of decorum" which bring about *practical norms* in the stead of the official norms (Olivier de Sardan 2008, 12). In this sense, prevailing norms become legitimate norms and a "what is becomes what is right" kind of understanding is formulated (Connelly 2011, 932).

Lund (2007, 4) asserts that legitimate authority does not remain legitimate forever but "must be vindicated and legitimated through a broad array of political practices." This assertion brings out the weakness in the concept of 'legitimacy'. The difficulty in the concept of 'legitimacy' is that it suggests a fixed property of a regime or institution. Furthermore, it does not take into account that legitimacy can be derived from many competing, overlapping but also distinct institutions. As Lund (2007) further argues, these institutions tend to confer different norms and legitimacies to practices. Regimes constantly engage with these different institutions in order to maintain their legitimacy. The constant engagement of regimes with institutions and practices that are meant to illustrate and bolster legitimacy suggests that legitimacy is a process rather than a fixed property. It is in this context that the concepts of 'legitimation' and 'delegitimation' become more applicable since they bring about a sense in which legitimacy can be gained or lost. Legitimacy can therefore be based on the belief held by subjects and the claims made by the authority (Barker 1990, 59). In seeking to understand legitimacy one therefore needs to investigate the processes through which actors engage in order to legitimise their actions rather than focussing on fixed institutions (Lund 2006, 693).

Furthermore, these processes of legitimation are multileveled; occurring at the level of the local interactions between peoples right through to the encompassing social framework. Berger et.al (1996, 379) describe legitimation as a:

> *[P]rocess by which cultural accounts from a larger social frame-work in which a social entity is nested are construed to explain and support the existence of that social entity, whether that entity be a group, a structure of inequality, a position of authority, or a social practice.*

Legitimation is thus itself a collective process and cannot be an instrument at the sole disposal of an individual. Though individual actors have the ability to frame practices in a manner that can be seen as legitimising them, they have to do so within the framework of a larger cultural account. In this case, actors are constrained by existing norms and practices. Actors are furthermore constrained by the imagined reaction of others within the social structure. In framing their actions, actors choose those actions which will be most accepted within the particular society. Each individual within the society engages in this very method. Thus through this collective set of practices actors construct a framework through which legitimacy is situated (Berger et.al 1996, 380).

The work of Berger et.al (1996) help bring about an understanding of legitimation and delegitimation processes between individuals at the level of everyday interactions. In our everyday interactions our external characteristics play a huge role in determining how we are perceived and what we want to say received. These characteristics mainly present themselves as our gender, race, educational achievements and occupation. Certain expectations exist within society that are tied to these external characteristics. More often than not, human interaction occurs within the confines of these expectations. Continued interaction in conformity to these expectations serves to validate and legitimate their existence.

In defining the legitimation of power at the level of everyday interactions we can begin by assuming that the legitimation process is initiated when, for instance, interactions occur between two individuals of different social standings. Both persons have certain expectations on the individual occupying a higher social standing. The individual of the lower social standing (from henceforth termed Person B) expects that the individual of a higher social standing (from henceforth termed Person A) will act in a way that is consistent with his standing in society. Person B expects that the decisions made by Person A will be of a superior nature, bringing greater rewards. Person A in return expects persons in the social standing of Person B will regard his opinions highly and give priority to his decisions. So as long as these expectations are met the legitimation process remains intact.

The delegitimation process is assessed by Berger et.al (1996) which is a work that carries on from Ridgeway and Berger's (1986, 1988) work. However, this work by Ridgeway and Berger did not concern itself with how power can become delegitimated once it has been legitimated. One way in which the delegitimation process is initiated when the expectations that are placed on individuals are not met, particularly, when the individual of a higher social standing fails to live to the expectations set on them. One way in which this process manifests is when Person B begins to notice some defects in the judgements of Person A and he realises that he can bring about better results if allowed to exercise his judgements. Person B then begins to question the notion that the decisions of Person A are inherently more superior. This condition deteriorates until Person A loses all legitimacy of superiority in the eyes of Person B.

In further explaining the legitimation process, Jacobsen (1999) introduces what he terms crescive legitimation. This is defined as "the growth of informal agreement in a collectivity about the proprietary of an object that differs from current normative expectations" (Jacobsen 1999, 256). This brings about the replacement of traditionally held beliefs, customs and values by new norms. Those who wish to remain relevant to the legitimation process need to constantly be aware of these processes and adapt to them accordingly.

The discussion on the nature of legitimation discussed above has particular implications for this research. The unfixed nature of legitimacy means that actors cannot act in any way they wish. Each actor has to constantly act out in a way that fits the prevailing social norm. The actions of the state in the demolitions went against the post-apartheid social norm of the preservation of human rights. What the challenge to the demolitions tell us, in as far as the state is concerned, is that the legitimacy of the state is not fixed but it has to constantly engage in practices that nurture this legitimacy. The justification of the demolitions by the state illustrates a way in which the state attempts to nurture its legitimacy.

Aspects of legitimation that will be particularly relevant to this research are; the contextual formation of legitimation, the processes by which it is lost and gained as well as its applicability in everyday interaction. In this next section I look at the ways in which other actors in society seek to engage in processes that foster their own legitimacy. I have identified two bodies of literatures by which we can further analyse the legitimation processes in the Lenasia demolitions. The first body of literature deals with issues of housing in South Africa and the other deals with visions of the suburbs. It is from this body of literature that we can analyse the claims made in the demolitions.

3.2 Accessing Land and Housing in South African Cities

Land and housing issues are better understood when discussed concurrently. This is particularly because one cannot adequately address housing issues without first addressing the land question. Lombart (1996, 12) is correct in stating that "access to land is a vital prerequisite to any form of housing process." Access to land remains one of the biggest challenges in the South African city. This is further exacerbated by the rural-urban migration. Many of those who move to the city in search for better opportunities

do so without much assurance of access to shelter. They then employ various tactics in order to secure shelter. Olufemi (2004, 2) argues that

> *Land invasion is one of the alternative tactics that the poor, powerless and homeless people adopt to access land on which to build their shelter. Land invasion by the homeless people is a consequence of desperation for space to put up a shelter.*

This is the state that many people living in Cities in Africa find themselves. According to Napier (2013, 1) "[m]ost people living in cities in Africa live outside of the legal system, without clear rights to the land they occupy." Many of these people make a home for themselves in squatter settlements within the city. There are varying degrees of "illegality" from squatting to the infringement of a minor legal regulation (Jenkins 2001, 629). The classification of "illegal" in the city often leads to confrontations with the state. Often those termed illegal find themselves in a constant struggle with the state (Thorn and Oldfield 2011, 520). The state in this case becomes the greatest source of insecurity among informal settlement dwellers through threat of evictions. Some of these residents threatened have taken to the courts in order to fight against these evictions often evoking the right to housing which is enshrined in the constitution of South Africa.

The constitution of South Africa lays the responsibility of the ensuring adequate housing for all on government. Section 26 of the constitution, which is mainly concerned with housing reads:

> *(1) Everyone has the right to have access to adequate housing.*
>
> *(2) The state must take reasonable legislative and other measures within its available resources, to achieve the progressive realisation of this right.*
>
> *(3) No one may be evicted from their home, or have their home demolished, without an order of court made after considering all the relevant circumstances. No legislation may permit arbitrary evictions* (The Constitution 1996, 12-13).

It has been noted that government has largely been unable to afford everyone this right enshrined in the constitution. Different reasons coming from different perspectives have been offered for this failure. Those who are politically and economically left-inclined see

the housing problem as being caused by the failure of the market to supply housing for all those searching for it (Malpass & Murie 1999, 3-4). On the other hand, those on the right-wing will argue that state intervention in the market is the cause and not the solution of the housing problem (Malpass & Murie 1999, 5). In addition to this it can be argued that actions undertaken by the private and public sector have proven ineffective in meeting the need for housing (Payne 1999, 3). This is mainly because private sector has been largely interested in catering for the wealthy. Developers who sought to cater for the lower-end of the market often encounter lack of support structures for this venture (*ibid.*). The direct supply of land by government has also proven to be ineffective due, in part, to the lack of support from key urban actors (Payne 1999, 2). It is this inefficiency that has contributed much to the urban poor mobilising for their own shelter. In this next section I continue to look at how this process of self-mobilisation takes place and how it can be supported by the state.

3.2.1 Self-mobilisation in the housing process

In addressing the housing problem and the low maintenance of some housing structures among the poor, Turner (1972) argues that the housing codes and administration is the main contributors to these problems. This is generally the case under two scenarios, Firstly, when there is a significant gap between the levels of investment required and the effective demand. Secondly, this occurs when this gap cannot be closed by subsidies from government (Turner 1972, 150). The solution for this, Turner suggests, lies in letting people choose their own housing and have a considerable say in its construction. This can be linked to self-determination within the city and can be a measure in recognising the poor's right to the city. The main motivation behind allowing people to a voice in the construction of their homes is that centralised programmes are often out of sync with the present realities of the local people (Turner 1972, 154).

Although Turner was not the only proponent of aided self-help, he was to become the more prominent of its advocates (Marias, Van Rensburg & Botes 2003, 349). The aided self-help theory which Turner advocates is one which sees land being provided to the people first and then people building on that land (Turner 1986, 8-9). This is contrary to the notion of putting housing before people. In this tradition of housing before people, the house is completed before the occupants are selected or known. When this system of housing fails to cater for all home-seekers, squatting occurs. Turner further argues that squatting is a "dual response to the dual failure of the market and the state in the sphere

of housing" (Turner 1986, 10). In low income countries it is the land that is being squatted and in high income countries it is the buildings that are being squatted (Turner 1986, 10-11). In South Africa both these processes seem to occur. This goes from the illegal occupation of buildings in the city to the land occupation that happens in many parts of the country. The research will advance from this conceptual framework. It will contend with the agency that people exercise in providing a suitable habitation for themselves.

This concept of aided self-help has, however, faced some criticisms. In responding to Turner, Burgess (1982) argues that one should not shun away the commodification of housing as Turner does. In the debate that ensued, commodification of housing became a key point of dispute in the aided self-help debate. In contending with these issues the research will seek to discover whether the people who have built the illegal houses in Lenasia see them as commodities or not. This will come through from the ways in which the usefulness of the house is perceived and if they could affix a monetary value to the property. Self-help housing has also been criticised by Neo-Marxists who see it as a support for capitalism and a double exploitation of the poor (Marias, Van Rensburg & Botes 2003, 352). This is done by extending the working hours as the people will have to build after work or during the weekend (Marias, Van Rensburg & Botes 2003, 352). The argument is further strengthened by the fact that it is mainly the poor who are required to build their own houses.

In bridging this divide and searching for alternative solutions to the housing problem, Ward and Macoloo (1992) argue that there are four interventions that can be done. First, the poor must be given recognition for their innovation and self-mobilisation in finding their own accommodation. This would mean that squatting should be recognised as a legitimate form of housing solution by the poor (AlSayyad 1993, 34). Authorities must therefore "seek to maintain a diversity of supply systems" (Ward and Macoloo 1992, 76). The adoption of this viewpoint will change the way government reacts to land invasion and squatting. Second, there needs to be policies in place that ensure that the absence of monopolies in the supply of houses as this often leads in some sections being left out. Third, there needs to be greater subsidies to cater for more housing needs. Finally, there should be more decentralisation with the majority of decisions being taken at the local level. Ward and Macoloo maintain that when all these four aspects are implemented there will be less people without housing.

The concept of access to land is pertinent to this research as it brings about a broader context in which to access the case of Lenasia. This case is unique to those discussed here as it does not take place in an informal settlement. The alleged land invasions have taken place within an established urban settlement. However, the manner in which the state has dealt with this case is similar to how it has dealt with many informal settlements. These often take the form of physical attempts to demolish, legal processes taken to evict and delegitimation processes of labelling residents as "illegal land invaders" (Thorn and Oldfield 2011, 518-519). All these three tactics have been employed by the state in the case of Lenasia. The residents have also mobilised around the right to dignity and housing. Attempts (although not as prominent) have been made in order to frame the "land invasions" as self-help practices that ought to be supported by the state – instead of demolitions. However, these calls have also been challenged by a group of "legal residents" who have a different vision for their neighbourhood – a vision of a suburban Lenasia South. The concept of a suburban ideal, I argue, is crucial in understanding the call by the "legal residents" for the demolition of houses built by the "illegal residents" in Lenasia South.

3.3 Visions of the Suburb

In this I want to firstly lay out an understanding of the "suburb" and how it can be applied as a concept. I will do this mainly through the notion of the suburban ideal which becomes much applicable to my analysis in chapter 5. In the attempt to attach a particular meaning to the concept of "the suburb" one immediately runs into a number of problems. Firstly, as Vaughan et al. (2009, 477) note "[b]eyond the most perfunctory level of definition, it is far from clear as to what this term actually means or indeed, whether it can be thought to possess meaning at all." Furthermore, there are various contending definitions of what "the suburb" is, such that, the subject is rendered 'elusive' and 'partial.' As Hinchcliffe has argued "The literature on suburbs is extensive, yet the subject always seems elusive. For some the suburb is a geographical space; for others, a cultural form; while for others still it is a state of mind (Hinchcliffe 2005, 899)."

Vaughan et al. (2009, 477) argue that a fuller conceptualisation of suburban space has been hindered by "four tacit assumptions" within the literature. The first is the assumption they term the 'one dimensional suburb' which is the assumption that the 'suburb' is a simple space that ought not to be problematized. The second is the tendency

to treat the suburb as a by-product of linear urbanisation or suburbanisation process. The third assumption is that the suburban space can be adequately defined by concentrating on multiple cultural constructions. The assumption is often coupled with the idea that any specific focus on the built form is "reductive environmental determinism" (Vaughan et al. 2009, 477). The fourth is the assumption of the 'suburban otherness' where suburban spaces are mythologised as places that "exist somewhere else and are inhabited by people unlike ourselves" (Vaughan et al. 2009, 484). The positioning of the 'suburb' in this manner opens it to a range of social indeterminacies. When these four factors come together they bring about an under-theorisation and over-representation of suburban space (Vaughan et al. 2009, 477)

However, in spite of the disagreements and problems that arise, there is a general agreement on the nature of the suburb being primarily residential (Hinchcliffe 2005, 899). The residential nature of the suburbs has of course in many ways determined the suburban built form. The built environment that persists in the suburbs from the twentieth-century onwards is supportive of the development of the suburban ideal. As Purcell (2001, 182) asserts "[t]he suburban ideal is a spatial vision, an imagined geography that carries many normative ideas about what space should look like and what it should be used for." It is a specifically Western Capitalist phenomenon that is virtually non-existent in the socialist world (Darbina and Luse 2012, 103). They are particularly bourgeois utopias created for the pleasure of the middle-class (Purcell 2001, 182).

The suburban ideal is created around the notion of abundance of space within the neighbourhood. Space for the accommodation of single-family houses situated within large yards. The neighbourhood should have an abundance of space to allow for an overall spread out settlement. Lastly there needs to be space for plentiful recreational opportunities (Purcell 2001, 182). The suburban landscape is by its nature a middle-class landscape. Thus the project of creating the suburban ideal becomes a project of creating a middle-class ideal (Purcell 2001, 182).

Much of these conceptions around the suburb and the suburban ideal are applicable to the South African context. Within the South African context, the suburb has been conceptualised largely as a "white" middle-class space. The "white" nature of the suburb emanates from the spatial segregationist practices of the apartheid regime which saw the creation of separate white and black group areas. From inception the white areas were

created to be significantly better resourced and economically superior to the black areas (Morris 2004; Mabin 2005). White spaces were created to fit the middle-class ideal of a nuclear family living in low density area with a spacious yard and perfectly manicured lawn. The suburb, as a residential area, is meant to create an environment of oneness with nature and moving away from the chaos of the city; it is meant to provide the peace that eludes the city. This is recreated by landscapes full of greenery, open sky and lush lawns (Purcell 2001, 182). The South African suburbs and those in Johannesburg particularly differ slightly in that they do not make clean break-away from the city centre. In fact many of these suburbs are located within the city boundaries (Kara 2014, 29). However, they do recreate the ambience of oneness with nature through green landscapes and the abundance of tress along the sidewalks giving credence to the notion of the "leafy suburb."

Figure 3.1 below is a street in Greenside, one of Johannesburg's suburbs. One can immediately see the proliferation of trees along the sidewalk.



Figure 3.1 A Street in the Johannesburg suburb of Greenside with an abundance of green landscape
Source Muneebah Kara ©2013

The image of suburbia in South Africa has mainly been understood in contrast to that of the "township." By definition, and legally speaking, the term township is devoid of any negative connotations and refers to the same thing as suburb (Kara 2014, 138; Bond 2008, 405). However, popular usage of the terms creates a stark contrast between the two. It is in this sense of the popular usages that I employ the terms. In this sense, the township becomes an apartheid creation meant for the black urban majority. In contrast to the "white" suburbs, the townships were underdeveloped and relatively poor. In

essence, much of these spatial dynamics remain intact even in the post-apartheid era. The "township" is still largely seen as undesirable in comparison to the "suburb." As such, many of the rising black middle class chose to settle in the "suburbs" whenever the opportunity rises (Chipkin 2012; Morris 2004). However, this is not the case with many black South Africans who for various reasons cannot, or choose not to, move out of the township. These residents then have to make the best out of their neighbourhood and immediate surroundings.

Many of the black residents of Lenasia South moved out to this area from Soweto being attracted to the promise of suburbia in Lenasia. I expound further on this in chapter 5. This promise of suburbia and escaping the township is crucial in understanding the call for the demolition of houses from the "legal" residents.

This next section on claims and the right to the city helps us to further understand the nature of claims and their context within Lenasia.

3.4 Claims or Right to the City?

Tilly (1997, 248) offers a definition of collective claim-making as "the public, joint expression by word and deed of desires that concrete other parties act in certain ways, ways that would affect their interests." This definition can be applied to individual claim-making whereby claims arise out of individual efforts. In this section I want to consider ways in which the 'right to the city', as a normative theory, can create a context in which claims can be advanced. In doing this one must be careful not to fall into the trap of equating the concept of 'right to the city' with any form of collective mobilisation taking the city as its object (Bénit-Gbaffou & Oldfield 2014, 281). This is especially pertinent to this case as the residents have not made any specific reference to the right to the city. However, there have been certain claims, advanced by residents on both sides that can be usefully analysed when contextualised within the frame of the 'right to the city.'

There exist two fundamental differences between claims and rights. Claims, as by definition, are expressions of desires which are not necessarily legally enforceable. Rights, the other hand, are normative judgements on the legitimacy of a claim. They are fairly stable, clear and precise and are legally enforceable (Coggin and Pieterse 2012, 261; Tilly 1998, 56). They belong to a section of society which Chatterjee (2004) terms *civil society*. They are thus inaccessible to other sections of society, namely, *political society*.

The right to the city, however, does not lend itself to this simple definition of a right but is rather drawn up from a set of interrelated and interdependent claims which are broadly applied (Coggin and Pieterse 2012, 261). The right to the city, following from Lefebvre, is understood as constituting a cry and a demand by the inhabitants of the city. This is a cry and a demand to access the city and to have a share in the urban life. It becomes a quest to share in the reality of the present and to share in the creation of a vision for the future (Coggin and Pieterse 2012, 259). This quest comes from the recognition that we can change ourselves through changing the city. As such, the right to the city becomes an agent of self-determination. Most importantly, the right to the city extends to all. It does not only extend to those whose presence in the city is legally protected and welcomed but to all who inhabit the city and have a vision for its future. The right to the city is therefore not of the city itself, instead it is centred on the city.

The city is a place of plurality and difference. It is a space in which competing claims are nurtured and articulated. Not only are the claims nurtured in the city but the city ultimately becomes a context wherewith these claims are made. The right to the city, being a composition of rights, becomes a mode in which the claims are transported. As Simone (2010, 7) remarks:

> [C]ities are a context for making claims, for figuring particular narratives of legitimacy that enable individual and collective groups of residents to access resources and opportunities, such as land, services, participation in institutions, and other entitlements.

The problem with one class taking upon themselves the task of shaping the city is that ultimately the dominated class finds itself inhabiting a city that was produced for them rather than by them (Mitchell 2003, 18). The city is an *oeuvre* – a work in which all its citizen's participate. The right to the *oeuvre* is never fully realised unless and until all members of society participate in the shaping of the city. The right to the city presents the right to habitat and to inhabit (Mitchell 2003, 18). This in itself implies the right to housing. The right to housing is necessarily differentiated from the right to property which in itself is exclusionary. The two rights have oftentimes come into conflict with one another.

The struggle to the *oeuvre* of the city is a persistent one which is contested through competing claims of what the city should be. This very contest plays itself of in the

Lenasia case where different visions for the city come to play. Chapter 5 deals more specifically to this aspect.

3.5 Conclusion

In this chapter I considered parts of the literature which are pertinent to this research. These consisted of different threads of literature. In the first section, I began by looking at the literature on legitimacy and formulating a way for a different understanding of the concept. Legitimacy is context specific and is in a state of constant maintenance. In this study we see the various ways in which legitimation is maintained. Much like legitimation, claim-making occurs within a specific context. Claims are made in order to influence the present and future. Some of the claims made in the Lenasia demolitions refer specifically to access to land and the use of the land. Literature on access to land deals specifically with this aspect.

As a normative theory, Lefebvre's right to the city was used here to bring an understanding to the origin of competing claims and rights in the context of the Lenasia demolitions. It brings in a vision were claims can be made by all who inhabit the city. However, when these competing claims are expressed such as in the case of the demolitions in Lenasia, the right to the city begins to reveal its limitations. The main limitation being that the right to the city is incapable of adjudicating between these claims. As such, the solution to the different interests lies is to be found outside of the right to the city.

Chapter 4 – Narratives of the Demolitions

Establishing the Actors: Finding the facts and Situating claims

The purpose of this chapter is to establish which types of actors that were involved in the demolition saga. In doing this, I consider some of the different claims which are articulated by each of these actors. Each of these claims rises from a different reality of the demolitions. These realities are made up of the status and position that the individual or group possesses. This also includes the experiences that result from this. These realities are themselves centred on a particular interpretation of events in the demolitions and expressed through narratives. These narratives serve to sustain the claims which are embedded therein.

The chapter begins by unravelling the narratives of the demolitions. This is done through a consideration of the facts presented and the different claims brought forward. Following from this, a construction of a timeline from the demolitions is made. I then proceed to look at the efforts made to challenge the demolitions. In this regard different actors and their actions are considered. Furthermore, I consider the role of SPLIT in seeking to find a solution to the dispute. This is then followed by a consideration of the contentions that make this solution difficult to achieve.

4.1 Finding the Facts – Unravelling Narratives of the demolitions

In this section I consider the narratives of the demolitions beginning with the narratives of the land acquisition right through to the narratives of the demolitions. Following which, I present a timeline of the demolitions which is constructed from the different narratives.

4.1.1 An elaborate crime syndicate and the question of residents' complicity

Much of the narrative from the "illegal residents" can be traced back to the existence of a syndicate that operated to illegally sell land to residents. I will, in this section, begin by analysing the understandings of the existence of a housing syndicate in Lenasia and the role it has played. A common occurrence in the different narratives advanced is the existence of this syndicate that operated in scamming unsuspecting prospective land-owners. The existence of this syndicate is purported both by the victims of the housing scams and by the government. Although, as we shall see, the government would like to argue that those who were scammed were in some ways complicit to their own

scamming. A syndicate is understood here to be an organised crime cartel involving various parties interested in the gains of such activities. The syndicate in this instance would be interested in the fraudulent sale of land.

In the investigations of this syndicate, a man by the name of Richard Zikhali was identified as the mastermind behind the housing scams. He was later arrested and prosecuted for his alleged involvement in the syndicate that was in operation. Zikhali is alleged to have gained millions from running this operation.[12] Zikhali was later found guilty on 94 counts of fraud relating to the sale of state land.[13] The arrest and prosecution of Zikhali fits into the state's narrative of advancing the rule of law.

According to this narrative, the demolitions were a necessary act of protecting democracy and advancing the rule of law. Addressing residents of Lenasia South in a public meeting regarding the demolitions on the 26th November 2012, Tokyo Sexwale, then minister of Human Settlements was quoted as saying

> *"…we want this to be an example of what the rule of law should be."*[14]

This narrative of the advancement of the rule of law is also tied to the prosecution of all who are seen to be part of housing scam. The statement below was made by Head of Department of Gauteng Local Government and Housing Department, Mr Mongezi Mnyani, during a current affairs programme on the national broadcaster. Mnyani has since resigned from this post and taken up the position of CEO of the National Home Builders Registration Council (NHBRC) which became a key stakeholder in the matter of the demolitions.

> *"There are syndicates who are committing these crimes, of course assisted by officials within the [Gauteng Housing] department and also within the City of*

[12] SAPA (2013) "Alleged land fraudsters in court" *IOL* accessed from http://www.iol.co.za/news/crime-courts/alleged-land-fraudsters-in-court-1.1497841#.UxXkmoWviGc on 03 March 2014.
[13] SAPA (2014) "Five years in jail for state land fraud" *News24* accessed from http://www.news24.com/SouthAfrica/News/Five-years-in-jail-for-state-land-fraud-20140817 on 06 October 2014.
[14] Nicolson, G (2012) "Lenasia demolitions: the Tokyo factor" in *Daily Maverick* accessed from http://www.dailymaverick.co.za/article/2012-11-27-lenasia-demolitions-the-tokyo-factor/#.VDJowxYW78k on 06 October 2014.

Johannesburg and I'm sure that you have seen the reports that we have already acted in that regard in terms of arresting those individuals."[15]

In this statement Myani alludes to the involvement of government officials in the housing scams. The modus operandi of the scam involved the scammer first searching for vacant stands with the City of Johannesburg.

This information on vacant stands is easily accessible from the website of the City of Jo'burg. The fraudsters, in many cases posing as officials from government, would then show the prospective buyers this land they intend to sell. The fraudsters would produce documents they claimed were from the Provincial Department of Housing which bore the department's letterhead.

The documents that he [Zikhali] gave me were from the [Provincial] Department of Housing. The documents were not hand-delivered. He posted them to our post-box in Soweto. It had an emblem from the Department of Housing. So then when we opened the document, we thought the document was legit.[16]

The prospective land owner would then be required to pay a deposit in order to secure the land. The price of the land varied a great deal. Residents reported to buying the land from as little as R2 500 to as much as R95 000.[17]

In 2009 we bought this piece of land that I'm standing in and then he [Zikhali] said he is selling this piece of land at R65 000. But he said he would like to have 50% upfront. At that time I was involved in a car accident and so I received R30 000 from the Road Accident Fund. With the money I had received from the Road Accident Fund I then paid out the deposit for the piece of land. He then said to me he will start debiting me R1 000 each month until I finish paying of the R65 000.[18]

---

[15] Mnyani, M (2012) Interviewed on *Interface*

[16] Mediaforjustice (2012a) "Lenasia resident speaks of Housing Scam" interview on 12 November 2012 accessed from http://www.youtube.com/watch?v=BYcfGUVOVqI on 27 February 2014.

[17] Mokone, T (2012) "Sexwale to Handle Lenasia Damage Control" in *Timeslive* accessed from http://www.timeslive.co.za/thetimes/2012/11/23/sexwale-to-handle-lenasia-damage-control on 16 May 2014

[18] Mediaforjustice (2012a) *Op. Cit.*

Others were requested to deposit the money in the fraudster's business accounts. Some residents who deposited money in such accounts did produce proof in the form of deposit slips. Thousands of stands are reported to have been bought or sold this way.

The residents maintain that they were oblivious to the illegal nature of transactions and that they genuinely believed everything to be legal. Many of the residents argue that they thought they were buying land from government representatives. They argue they had no reason to suspect that those selling them the land were fraudsters. One of the residents I spoke to added that

> "… *I was taken by my friend to meet this particular individual, a housing official. My friend had himself bought his house from this person so he introduced me to him… Every time I met up with him, he wore a golf t-shirt with a government logo on it. He was a government official, government officials are the ones who sold us this land" (*Anonymous Resident, Lenasia South)

During a protest against land invasion in Lenasia South, one of the "legal residents" protesting argued that the victims of the land-scam were well aware of the illegal nature of the transactions.

> *These stands are being sold from a car boot - they park outside the BP garage. Buyers know what they are doing is illegal.*[19]

Regarding this matter and some residents claiming to have been scammed, the Councillor of Lenasia South stated:

> *There are people, in the different meetings, who allege to have been duped. They say, we ran into a scam. They claim they were innocent, they say we did not know. They say guys came with papers with the logo of Gauteng Housing Department. So they say we thought this thing is genuine. When you act upon them, in terms of the law, in terms of humanity and so forth, you apply your mind to say, if really, Edward was just a desperate person looking for a*

[19] Clement Mzizi Quoted in Cox, A (2012) "Legal residents want houses demolished" in *IOL News* accessed from http://www.iol.co.za/news/crime-courts/legal-residents-want-houses-demolished-1.1430800#.Uy72moX4KeZ on 18 March 2014

> *place and he became a bit gullible by not asking 'but why are all your papers photocopies?' From where I am sitting and yourself because you're a learned person, when somebody is working with you but everything, the stamp and everything is photocopied you'll then say but Councillor, these are papers are not the originals. When you give me something stamped, give me the originals. They belong to you so give me the originals and you keep the copies. So that wherever I go when someday I'm requested to prove, I must show the originals, stamped with the original signature* (Molutsi 2013, Personal Interview).

Molutsi went on to add that:

> *There were notices each time there was this type of invasion because we know that it is this side, and that side and that side. The inspectors from Gauteng Housing would come down and issue letters to these people. They would get guys busy [building] and issue them with a letter. That letter states very clearly that, you are busy occupying or already in occupation of a property belonging to Gauteng Housing, you're being advised to stop whatever that you're doing and vacate.* (Molutsi 2012, Personal Interview)

These sentiments are reinforced in the government's narrative of the demolitions. During an interview in a current affairs programme covering the demolitions. The MEC for Housing in Gauteng stated that:

> *In this particular instance no one can claim ignorance. In 2006 this matter was in the media, widely, by the MEC at that time to say people must stop buying land illegally. So you can't claim ignorance in terms of the law but secondly people were informed. I've got proof, even instances where the previous MEC's engaged on this matter. There are residents' committees that the department has been meeting with, including myself I went to meet with the stakeholders on the ground.*[20]

[20] Mekgwe, Ntombi (2012) "Lenasia residents ignored government calls to vacate" Youtube Video Published 12 November 2012 available https://www.youtube.com/watch?v=ROTHxJEGs3s accessed on 29 August 2013

Despite the warnings that were prevalent, many of these residents showed desperation for housing. Their desperation seemingly made them easy targets for fraudsters selling land. This was a good opportunity for the fraudsters to disguise themselves as government agents seeking to help out the community. The business account registered by Zikhali was also meant foster this impression. Zikhali's business was registered as "Simunye Community Development." The "community development" feature in the name was meant to give the illusion that this was indeed meant for development and empowerment purposes. "Simunye" is a Zulu word that translates "we are one" in English. Collectively the name gives to unsuspecting clients the impression that this is a community project, possibly supported by government, and meant to uplift the community.

In keeping with this idea of community development, Zikhali encouraged the land-owners to build structures that met the standard of the neighbourhood they were in. Zikhali mainly operated in extension 13 of Lenasia. Those who bought from him generally attempted to build nice looking houses consistent with the already existing houses. As a result, the houses that were built in these early stages of the scam are of good quality and match existing housing. Such attempts were made in the earlier built houses in extension 4. One can only point out these houses when they have an intimate knowledge of the neighbourhood. Being a resident of the area, I was able to benefit from this knowledge which I possess in order to identify these houses.

Figure 4.1 below illustrates one of these houses in Lenasia South.



Figure 4.1 One of the earlier illegally built houses in Lenasia South. Source: Molopi 2012

One resident spoke of the many ways in which they financed this project. This included taking out various bank loans and using money from an educational policy.[21] Some of those who sold the land illegally are alleged to be owners of hardware stores or closely linked to them. As such they were able to work out methods of supplying building material for the residents to build their houses. After building, the land-owner would be handed with a fraudulent letter from the Gauteng Department of Housing. The letter would state that the title-deed for ownership was still in preparation and would be handed over at a later stage.

The scam employed here was quite an elaborate one. It particularly took advantage of impressionable buyers who may not have been too aware of housing processes. It is likely some of these residents genuinely did not suspect any illegal activity. However, it is equally likely that some might have suspected that some illegal activity was taking place but forged further with it believing government officials were to be involved.

[21] Mediaforjustice (2012a) *Op. Cit.*

Rubin (2011) notes that there is a widespread perception of corruption by government officials in South Africa in matters pertaining to housing. Due to this widespread perception and the belief there will be no consequences (because of government's implication) residents would have been more willing to engage in the sale, even if corruption was suspected.

4.1.2 Failed Negotiations

The Gauteng Housing Department began investigating the illegal sale of land in 2006. This was after the department began receiving water and electricity bills on its properties meant to be vacant. In investigating this matter the department began its own forensic audit of land in the Province of Gauteng. The forensic audit itself follows from the findings of a commission that that was appointed by the Department. The forensic audit was also carried out, in part, as a verification of the commission's findings.

> *Firstly in 1997 the then MEC for Housing appointed a commission which was known as a George Fivas Commission to actually investigate all the issues of illegal land exchange in the Gauteng Province. So this is a Gauteng wide problem and I also know that in other provinces it might be happening as I am talking to you. As a result in terms of that investigations there were a number of recommendations that were made. One, including assisting the poor people in terms of allocating the houses. Two, it was an issue of saying we need to verify the information that was brought forward by George Fivas and in terms of that information we did a forensic audit and that forensic audit pointed to a fact that there were organised crime syndicates that were selling land or exchanging land, charging people… that is the case in Lenasia, Lawley and Ennerdale*.[22]

The report of the investigation was submitted to the Department in early 2010. The report confirmed that there was indeed illegal land-occupation activity taking place in Lenasia and surrounding areas. At the time, in Lenasia alone there were 678 stands that were implicated and over a thousand in Lawley and Ennerdale. It was based on this information that the Gauteng Housing Department decided to act.

[22] Mekgwe, N (2012) *Op. Cit.*

The events that took place November 2012 were a repeat and enlargement of events that had taken place at an earlier stage. In 2010 the department engaged on a series of demolitions in Lenasia.[23] The targeted structures were those still at construction phase. An uprising by community members prevented the Department from proceeding with the demolitions through protest action (Mofokeng 2014, Personal Interview).

Many of these community members lived in these disputed homes. The uprising was followed up by a court order to halt the demolitions applied for by the residents with legal counsel they collectively paid for. The court order also indicated that there should be no further constructions on government land. Government understands this to have been a restriction placed on the residents.

In a press release on the demolitions, the Gauteng Provincial Government made these following points as an attempt to explain their decision to demolish

- *In September 2010, there was an interim court order prohibiting the Department from evicting and demolishing the illegal properties in Lenasia Ext 13 and Lenasia South Ext 4 and Ennerdale;*
- *The applicants were also interdicted from further erecting and constructing structures on the properties belonging to the Department until a final Order is issued;*
- *While the Department adhered to the Interim Order, the applicants continued to erect structures and invade government-owned stands, ignoring the legal process;*
- *The Department opened several cases of contempt of court against the illegal occupiers in December 2010;*
- *13 builders were arrested on site for violating the interim court order.*

Source: Gauteng Government Online 2012

Following this, the Department applied for a court order to proceed with the demolitions. This court order was granted in September 2011. The residents went to the courts to challenge this court order arguing that they were victims of a land scam. The Department subsequently invited the residents to negotiate. As such the Department did not proceed with the demolitions stating that they want to find more humane solutions to the problem.

[23] Moeng, T (2012) *Op. Cit.*

> *Remember on the 29th of September 2011 there's a court order, the ruling says you as an individual, there were about 186 individuals, you evict yourself and demolish the property within 30 days. And that 30 days ended on October 2011, and if you don't do this on your own, the Department must do it. That's what the Court said, but still we delayed implementation because we still wanted to engage, we still wanted to mediate.*[24]

However, these negotiations failed due to numerous factors. In an interview on a Television Show Mnyani, then Head of Department of Gauteng Local Government and Housing Department, stated some of these reasons why government acted in the manner in which it did.

> *But again what is critical is that the Court ordered that there should be a mediation process*[25] *and the residents failed to come to the mediation process because that is where we were going to put everything on the table and say you are Mr so and so, you are occupying this erf what is your background, do you work? How much do you earn? So that we can help you, but out of the 163 only 11 pitched up for the mediation, out of that we only picked up three that were on our housing demands database because we have to run you into our housing demands database to see whether or not do you qualify for government subsidies or not. Only three were found to be qualifying, that on its own the mediation process collapsed precisely because as we are busy mediating, people are busy building this side. Again, the engagements with the former MEC they collapsed because… He* [referring to another guest on the show, a representative of SANCO] *says we were not faithful to those discussions, we were! Until we saw that we were negotiating with people in bad faith, in such a way that they come to negotiate with us and when we go on site people are building there. Then how do you come as*

[24] Mekgwe, N (2012) *Op. Cit.*
[25] The order for a mediation process went out in March 2011. Mafisa, I (2012) "This land's not your land" *New Age* accessed from http://www.thenewage.co.za/mobi/Detail.aspx?NewsID=73039&CatID=1008 on 11 March 2014

a resident's association, not talk to the people on the ground and say stop building we are talking to government. That's where it collapsed.[26]

The government invited those who claim to have been scammed to produce documents to prove these claims. This would be done on a case by case model and each individual application would be considered on its own merits. The residents did not subscribe to this individualisation model and opted for a solution that would encompass the collective. The community in this regard accepted their destiny as tied together, believing that separation and individualisation would weaken them. In order to maintain their strength and ensure their survival they saw the necessity to remain together. The government refused to recognise the collective and chose to treat each of the persons as individuals. Government argues that there were some from the community who wished to come forward and present themselves as individuals. However they were threatened with violence by the community.[27]

The second hindrance to the negotiations was the terms to which the negotiations were to take place. Pending an assessment by the Department of Human Settlement, those who submitted their applications would be looked up in the Department's Housing Demand Database (HDD). The government saw this as a way of recognising those who were in need of governmental support. Only those found within the HDD would be liable for government assistance. The Housing Demand Database is a repository containing information of all those who have expressed a need for housing (Tissington et.al 2013, 3-4). Seemingly, those who had not applied for governmental assistance in housing were considered not in need for housing. As such the governmental seemed only interested in helping those found in its demand database. So it was possibly not in the interest of some of the residents to come forward to the negotiation.

Lastly, the discontinuity in government structures is the third hindrance to the negotiations. The negotiations came to a standstill when the MEC for Local Government and Housing, Humphrey Mmemezi, whom the residents have been negotiating with,

[26] Mnyani, M (2012) Interviewed on *Interface*
[27] Parliamentary Monitoring Group (2013) "Newtown & Lenasia housing interventions: progress report by Department of Human Settlements" Audio Recording of proceedings accessed from http://www.pmg.org.za/report/20131106-newtown-lenasia-housing-interventions-progress-report-department-human-settlements on 23 January 2014

resigned in September 2012 on accusation of mismanagement of funds.[28] The department was at this stage working out a pricing method to implement for the residents.[29] This meant that the resident would be allowed to buy the land from government at the price determined by this pricing method. The resignation of the Mmemezi and his replacement with a new MEC, Ntombi Mekgwe, meant that residents had to begin negotiations all over again with the new MEC. It was in the process of trying to reach Mekgwe to resume negotiations that residents were handed with eviction notices. These notices were followed by the demolitions a few weeks later. The first demolitions took place on the 9th of November 2012 in Lenasia extension 13.

The resignation of Mmemezi, hampered the progress of the negotiations and introduced a new direction for the Department. The change of the MEC allowed the Department to continue with the demolitions while giving the resident the impression that they were still committed to negotiations. It remains unclear as to whether the Mekgwe was properly briefed by her predecessor but there seems to have been no commitment from Mekgwe to engage with the residents. The disjuncture from the operational stance adopted by Mmemezi and that of Mekgwe reveal the discontinuity in government structures. On this issue, government has not acted in a uniform manner but has moulded its actions according to the dictates of its head.

4.1.3 Digging History Further – A Failed Provincial Housing Project, Opening the way to the scam.

In seeking the grand narrative of the Lenasia demolitions and carrying out the field-work of the research I encountered different narratives on the origins of the demolitions. However, it was from Monde Mofokeng, an official with the Anti-Fraud and Corruption Unit (AFCU) of the Provincial Housing Department, that I encountered a history going further back in time. For many of my respondents the history begins at a point when the "illegal" homeowner enters in the process of purchasing land. For government, the history goes much further than that. In his capacity as an investigator, Mofokeng was tasked with investigating fraudulent housing activities in the Lenasia area. He begins by

[28] City Press (2012) "Health MEC takes over from Mmemezi" accessed from http://www.citypress.co.za/news/health-mec-takes-over-from-mmemezi-20120716/ on 27 February 2014
[29] Mediaforjustice (2012b) "Lazarus Baloyi - Chair of Concerned Residents, Lenasia" interviewed on 17 November 2012 accessed from http://www.youtube.com/watch?v=17568Jh96dM on 27 February 2014

telling me: "*This thing goes a long way back...*" at which point he begins to relate the history to me.

According to him, the illegal housing activities in Lenasia have their roots in failed housing project that was run in the area. This housing project was initiated by the Department of Housing in these affected areas in the mid-1990s. The project was known as POSS (Public Owned Serviced Sites). The project was an RDP project meant to empower disadvantaged small developers in the process of providing housing. The Department identified about 80 stands that were to be developed on, both in Lenasia extension 13 and Lenasia South extension 4. In addition to this the Department also identified developers who were to develop these stands. Each of these developers was given about 20 stands to work with (Mofokeng 2014, Personal Interview)

The developers were to develop, market and sell these stands that were allocated to them. However, as one narrative goes "no financial assistance was given to small developers."[30] Proponents of this narrative argue that the demolitions saga was poorly handled by government. The central argument of this narrative is that government is to blame for the conditions that lead to the illegal occupations. In the extreme expression of this argument it is firstly argued that it is government's fault that people are still without houses. Secondly, it is argued that it is government that led to people illegally constructing their houses (knowingly or not). To quote but one expression of this argument, I will refer to Stuart Wilson who is co-founder of the Socio-Economic Rights Institute of South Africa (SERI). SERI has represented occupiers in a number of eviction cases.

> *The problem is it was the government's fault that those people built those houses in the first place. If these guys came and occupied the land and built their houses with no permission it would be different, but the provincial government was responsible for the fraud committed but it didn't stop its own people from selling land illegally. It's a bit rich to say we now need this*

[30] Jardine, F (2012) "Housing Department's demolition is illegal, dishonest" *The Star* accessed from http://www.iol.co.za/the-star/housing-department-s-demolition-is-illegal-dishonest-1.1423688#.UxW8mIWviGc on 03 March 2014

land for other people when you didn't stop these people moving in in the first place.[31]

One resident of Ennerdale, an area close to Lenasia South also affected by the illegal sale of land the project failed, wrote to a national newspaper to give a perspective of the demolitions and the failed housing project. According to this resident the project failed because government showed a lack of commitment, financial or otherwise to it. During the process of the project the Department is alleged to have constantly changed directors by firing old ones and hiring new ones. Each of these directors tried to change the terms of agreement with the developers and implement new rules.

Figure 4.2 Below is an extract of an article written to *The Star* newspaper by this resident, Farouk Jardine.

... Around 1996, I was involved with the POSS (Public-Owned Services Sites) programme, the first RDP housing project undertaken by the Gauteng Housing Department, on behalf of the community of Ennerdale and Lawley. It covered Ennerdale, Lawley, Lenasia South and Lenasia extension 13... Ennerdale and Lawley were supposed to receive more than 200 houses. Less than 30 were built. The poor builders were given a raw deal. They used funds they did not have and had to wait months for the department to refund their money. This programme was a failure and had to be abandoned.

The department also had another programme running whereby they allowed small developers to sell and market stands in the same areas.

Again, no financial assistance was given to small developers. The department also appointed new directors during that time and each one made their own rules and also tried to change existing agreements between the department and the developers.

The rot is in the Housing Department. I have evidence that many stands that were allocated during the POSS programme in 1996, already had houses built on them and were bonded by the bank. Yet the department did not know how that happened.

The housing department is now selective with its facts. Yes, it may have informed the informed residents that the stands were not legally obtained...

Farouk Jardine,
Ennerdale

Figure 4.2 Extract from a newspaper article
Source: Independent Online 2012

This article was written shortly after the demolitions took place in extension 13 of Lenasia. The resident here wanted to give a background to the demolitions and to expose what the resident believes is the dishonesty on the part of the government. This resident presents

[31] Nicolson, G (2012) *Op. Cit.*

what could be seen as inconsistency within government policies. According to this article, this lack of consistency and regularity also contributed to the demise of this particular housing project. The Department is alleged by Jardine to have also allocated stands to developers that "already had houses built on them and were bonded by the bank. Yet the Department did not know how that happened." By this, the author of the article seeks to show lack of follow up, consistency and accountability within government structures.

Regarding the failure of the project Mofokeng went on to add:

> *Well I can't really say it failed or why it had to be stopped but it had to be stopped… But it was a pilot project to see if this sort of programme can work and it didn't* (Mofokeng 2014, Personal Interview).

Mofokeng's classification of the project as a pilot project is meant to lessen or remove the guilt of the failure of the project away from government. Labelling it as a pilot project opens up the project to the possibility of it not being feasible, as such needing to be terminated. In fact as I will indicate, the failure of the project is of little significance in Mofokeng's narrative. What becomes important is what transpired after the project was ceased.

According to Mofokeng, the illegal housing activities in the Lenasia area have their roots in the dishonesty of the developers. Mofokeng states that the developers began encroaching on vacant stands and developing on them without the Department's knowledge or approval.

"… *In fact, some of these developers were now developing beyond what was allocated to them. They realised that ok this stand is not developed; I can develop on it too. People like Richard Zikhali learned from these developers. He and others like him would check for vacant land and they would start selling. This information [on vacant land] is accessible to anyone* (Mofokeng 2014, Personal Interview)."

The propagation of this illegal activity was aided by the great demand for housing. The developers would have then capitalised on this demand and created an opportunity for other fraudsters to advance their activities.

4.1.4 Timeline of the Demolitions: The Grand Narrative?

.

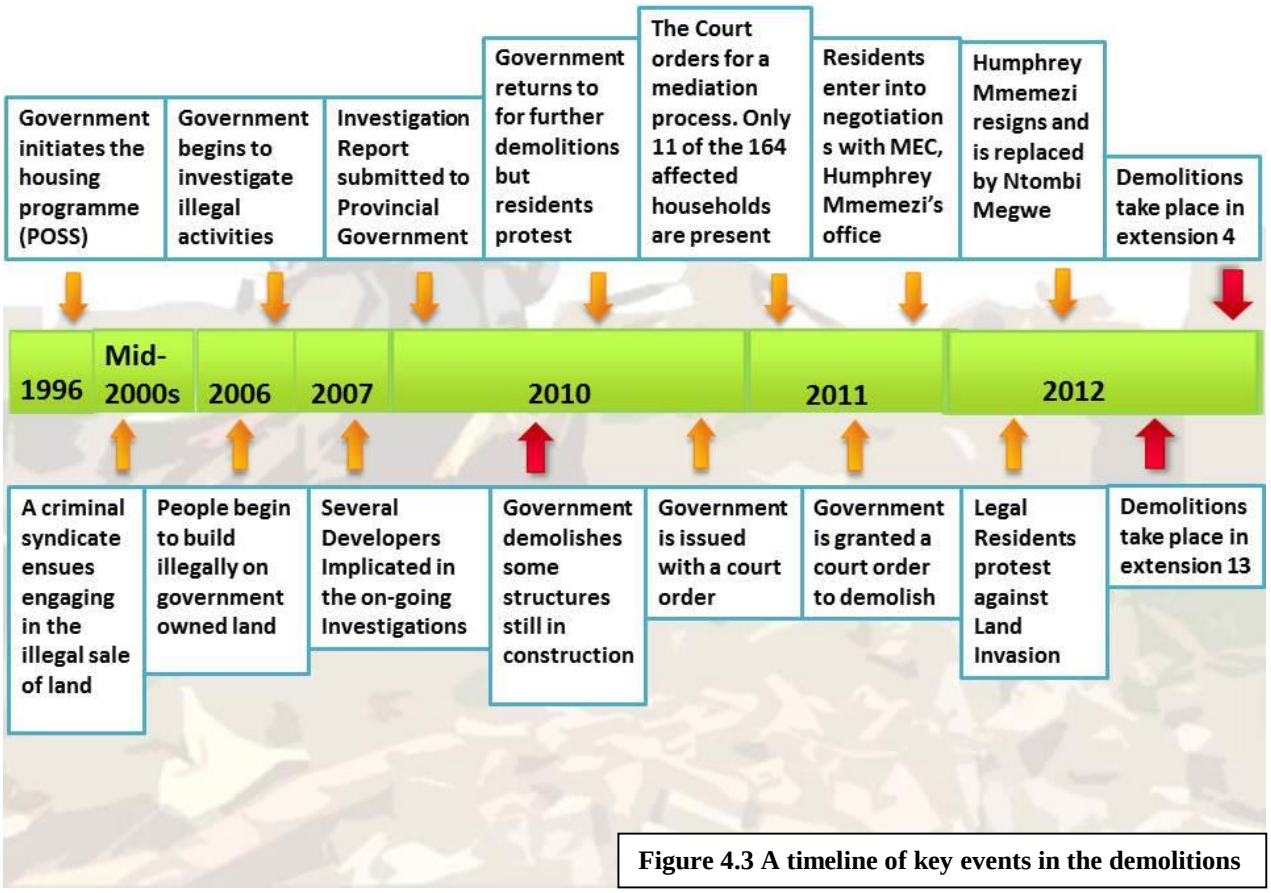

Figure 4.3 A timeline of key events in the demolitions

Figure 4.3 above offers a timeline of the events of the demolitions. This is my reconstruction from the narratives given by government, residents and some stakeholders. The events of the timeline are as follow:

In 1996 the government initiates the POSS programme in order to respond to the housing need in the south of Johannesburg. The details of this programme are discussed above including the failure of the programme. Following the failure of this programme is the formation of a housing syndicate which adopts some of the methods of the programme in order to fraudulently sell land to prospective home-owners. In 2006 people begin to build illegally on government owned land. In the same year government begins to investigate alleged illegal activities. These investigations were initiated after government began receiving utility bills for land it knew to have been vacant. In early 2010 the investigation report was submitted to the Gauteng Provincial Government. Following this report the Provincial government decides to act by demolishing some of the structures in Lenasia

extension 13. The demolitions take place on a Friday in November of 2010. When the government returns to execute further demolitions on the following Monday they are met with protest action from the residents preventing them from demolishing further. The government is in the same period issued with a court order to prevent further demolitions.

In March 2011 the court orders for mediation process between government and the affected households. Only 11 of the 164 affected households present themselves for the mediation process. Government claim that this shows that the residents were not committed to finding an amicable solution to the problem and showed a disregard to this process. The residents dispute this and claim that the 11 were representing the collective. This mediation process fails and based on this failure Government successfully applies for a court order to demolish. Residents enter into negotiations with MEC, Humphrey Mmemezi.

In September 2012, Mmemezi resigns as MEC and is replaced by Ntombi Mekgwe. In the same month, a group from the 'legal residents' protest against land invasion taking their protest to the local civic centre where the council offices are. The memorandum is accepted by a representative from Mekgwe's office. In around the same time the "illegal residents" attempt to reopen negotiations with Mekgwe. While in this process the Department begins issuing letters of eviction. The demolitions then took place in November 2012.

Following the demolitions, the SAHRC and SANCO were instrumental in getting a halt on the demolitions. SANCO's efforts were instrumental in stopping the demolitions at the grassroots level and getting some media exposure. While the SAHRC, on the hand, was instrumental in engaging through the courts and successfully applying for a court interdict against the demolitions. The SAHRC was joined by the LRC and COSATU in the proceedings as *amici curae* (Friends of the Court).[32] The different strategies employed by the SAHRC and SANCO as well as their effects will be dealt with more deeply later on in this section. Apart from the residents themselves, the work of these two organisations is crucial in this matter and deserves greater analysis. This is because their efforts, more so than others, were invaluable in stopping the demolitions. By looking at

[32] Macupe, B and Bailey, C (2012) "Lenasia victims must be compensated" in IOL News accessed from http://www.iol.co.za/news/politics/lenasia-victims-must-be-compensated-1.1430024#.Uw3eTM55cms on 26 February 2014.

the role they each played in stopping the demolitions the significance of their work will become clearer.

4.2 Acting from below: The role of SANCO

SANCO was established in March 1992 as an umbrella organisation for civics in South Africa. The establishment of SANCO created a national platform for civics that were otherwise only organised at the local level (Heller and Ntlokonkulu, 2001, 12). In its establishment SANCO took the stance of not being allied to any political organisation. However, they abandoned this position in the run up to the 1994 elections when they chose to throw their weight behind the ANC election campaign (Lodge 2003, 207).

The coalition with the ANC has been detrimental to SANCO as an organisation in many ways. The earliest problems were with the co-optation of the majority of SANCO leaders into government when the ANC came into power in 1994. This move required that these leaders relinquish their positions within SANCO leaving the organisation with a leadership gap. Not only did this create immediate problems for the organisation but it had major implications for its future (Lodge 2003, 207).

It is in this period that SANCO witnessed its decline as a powerful national player. This was further exacerbated by SANCO's inability to successfully negotiate for its position in the new democratic dispensation (Bénit-Gbaffou et al. 2013, 142). SANCO has as a consequence found itself under severe criticism from various sources that also went on to question its existence and usefulness (Zuern 2004, 2). However, despite its difficulties at national level, SANCO still maintains a visible presence at the local level. Civics play an important role in community life at branch level and SANCO remains very influential at this sphere and greatly shaping community affairs (Heller and Ntlokonkulu, 2001, 7-8). Furthermore SANCO has the ability to put pressure on ANC branches at the local level and to mobilise for resources to benefit the community (Bénit-Gbaffou et al. 2013, 142-143). SANCO's ability to organise at the local level was instrumental in challenging the demolitions that occurred in Lenasia, especially as they took place in Lenasia South extension 4. Through its efforts SANCO was recognised as a key player in the Lenasia demolitions saga deserving of inclusion in further discussions. I will now give a brief context of SANCO's actions in challenging the demolitions.

Perhaps the most important action that SANCO took in prohibiting the demolitions was in the formation of a human shield to prevent further demolitions. The importance of this

act is better realised when we consider the symbolic impact that this has had. The human shield was formed around the home of Lazarus Baloyi, Chairman of the residents' group opposing the demolitions, to prevent it from being demolished. This was a symbolic gesture of unity in struggle and survival. It was the coming together of those who identified with the struggles of those whose homes were being demolished. Together they declared that they will not allow for such atrocities to prevail. The symbolic meaning of the human shield cannot be overlooked. The act itself sends out a powerful message that cannot be ignored. It is a quest to protect through one's body that which is seen as essential for a livelihood. Through forming the human shield those participating seemed to send out a message that "you can only demolish here over our dead bodies." The human shield did in this case prove to be an unmovable obstacle for government.



Figure 4.4 Rubbles of a recently demolished house with Baloyi's house standing in the background Source: Daily Maverick 2012

Figure 4.4 above shows rubbles of a recently demolished house with Baloyi's house still standing in the background surviving the attempt to demolish.

The strength of the message relayed in the formation of the human shield is also bolstered by the image government seeks to portray of itself. In contrast with the former Apartheid government, the ANC-led government in has always had the desire to be seen as pro-poor. It has always wanted to be seen as advancing the interests of marginalised

and poor (Seekings and Nattrass, 2011 342). It would therefore not want to be seen as persecuting the poor and unduly mistreating them. Any attempt to demolish past the human shield would create such an image. SANCO helped frame an understanding of the demolitions as an assault on the urban poor and black majority. This was achieved through various press releases and interviews given in the media. To them this was an indication that government was deviating from the agenda of looking out for the poor. The understanding of victims of the demolitions being black and poor is central to the claims made by SANCO. SANCO further argues that black people, particular those without money, were hand-picked for the demolitions:

> *Only black people were targeted, the demolitions were numbered because they would target a particular space but then other houses were jumped on the basis of ethnicity. Coloured and Indian people's houses were not demolished but in the same place, only black people were targeted. I did not see one Indian house being demolished in Lenasia, even here in extension 4 I did not see one Indian house being demolished to be honest* (Magwaba 2013, Personal Interview).

In making these claims SANCO released some joint statements together with COSATU and the SACP. SANCO also appeared on numerous television debates with government official concerning the demolitions. Apart from the strategies employed by SANCO, the demolitions have also been challenged in the courts by the SAHRC. The next section looks at the role of the SAHRC in challenging the demolitions.

4.3 Engaging the Courts: The Role of the SAHRC

The courts play a central role in the dispute around the Lenasia demolitions. It is on the basis of legal processes followed by the government that the government claims that its actions were legitimate. On the other hand it is also in the courts the actions of the government were called into question. In this instance the courts became both an agent of legitimising government actions and delegitimising them.

The South African government has often faced criticism and litigation based its approach to housing evictions especially of the poor. The cases of Government of the Republic of South Africa vs Grootboom and Abahlali baseMjondolo and 30 others vs eThekwini

Municipality and others are some of the better known cases (Huchzermeyer 2010). The accusation brought against government has mainly been due to the failure of government to follow the correct processes in effecting the evictions. It would seem that government has learnt from these past failures and is in this particular case referring to the legal processes it has undertaken. As a result, the SAHRC in its legal challenge has not questioned the legality of the demolitions. The focus of the legal challenge has been the manner in which the demolitions have been carried out. This is confirmed by a statement released by the SAHRC:

> *We want to emphasize that the Commission is not against the process by the Department, but the inhumane way in which the process is been carried out*.[33]

The SAHRC has mainly challenged the demolitions based on the right to human dignity and the trauma that the demolitions have caused to vulnerable groups. The SAHRC typically works through cases that have been reported to them for investigation. When it is convinced that there is merit in a case, it will then pursue that particular case. The involvement of the SAHRC in the Lenasia dispute illustrates one of the ways in which the SAHRC functions. I will now present a timeline of the SAHRC involvement in the Lenasia demolitions.

[33] SAHRC (2012c) "Lenasia: SAHRC welcomes and supports the intervention team announced by the Human Settlement Minister" in *The South African Human Rights Commission* accessed from http://www.sahrc.org.za/home/index.php?ipkArticleID=157 on 26 February 2014

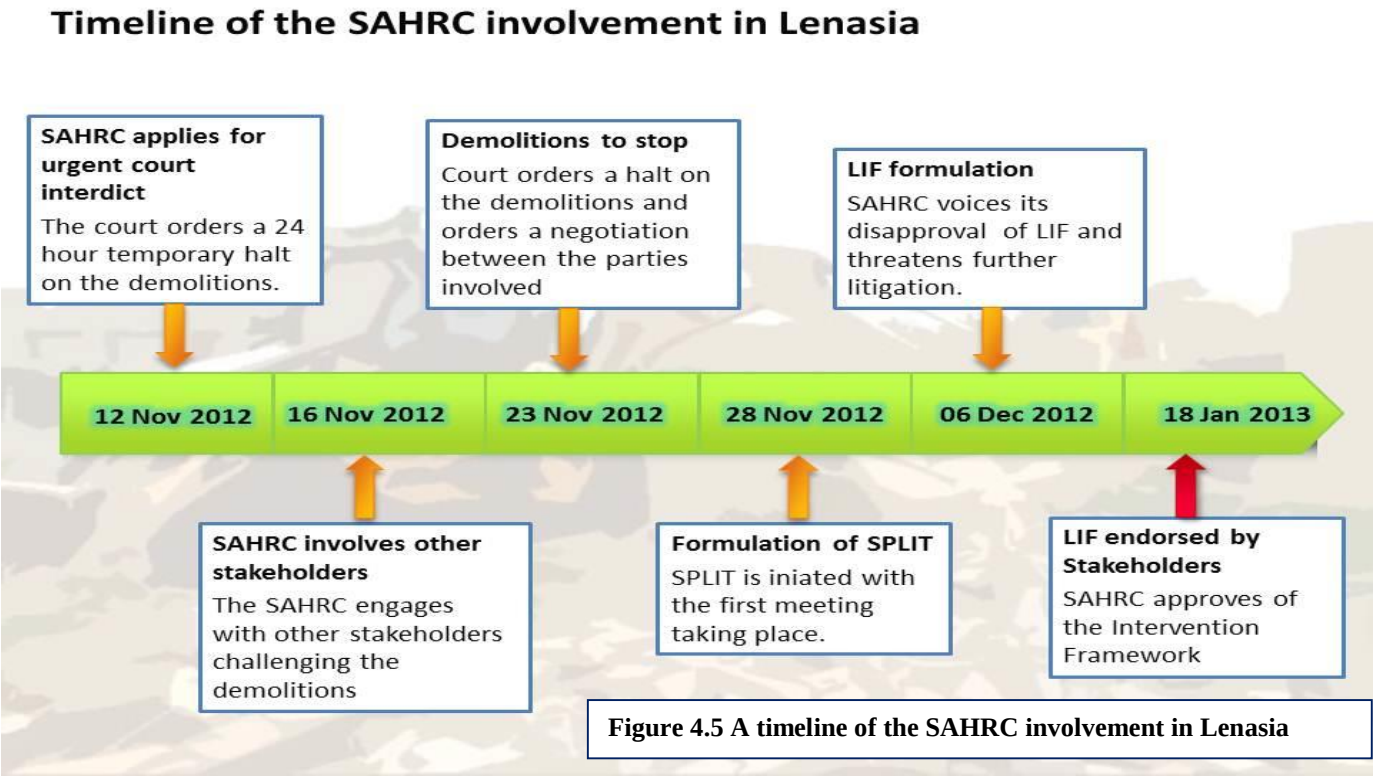

Figure 4.5 A timeline of the SAHRC involvement in Lenasia

The SAHRC began its involvement with applying for a court interdict against the demolitions on behalf of the residents. The court interdict was applied for and granted on 12 November 2012. The court order issued for a 24 hour temporary halt on the demolitions. The SAHRC uses this time to engage with the resident in order to plan for a more effective defence against the demolitions. This was also an opportunity for the SAHRC to familiarise themselves with the case as they had very little information concerning the matter at the time. Kayum Ahmed, CEO of the SAHRC commented on this fact in the during an interview on a current affairs programme a few days after the demolitions took place

> *We became aware of the saga just over a week ago on Friday afternoon when houses were being demolished and the Human Rights Commission was then called by some of the residents who had indicated that were concerned about the fact that vulnerable and marginalised groups in these communities were being affected we immediately dispatched a team to the area. We noted that the demolitions had taken place and we then launched an urgent court application on Monday to try and prevent the demolition so that the*

Human Rights Commission could investigate the matter further… This is the first time that we had heard about the matter.[34]

On 16 November 2012, the SAHRC went on to engage with other stakeholders challenging the demolitions. These, among others, include the South African Communist Party (SACP), the Congress of South African Trade Unions (COSATU) and SANCO.[35] All these organisations had at this point publicly condemned the demolitions through interviews in the media and press releases. The coming together of these organisations is to present a more uniform opposition to the demolitions. Government is at this point faced with opposition to the demolitions operating at different capacities.

However, in spite of this opposition faced, the state went to demolish about 35 houses in Lenasia South extension 4. The SAHRC expresses its discontent over government's actions and determination to demolish further. In the press statement issued the Commission stated:

The South African Human Rights Commission would like to express regret and disappointment in the manner in which the Department of Housing and Local Government in Gauteng conducts itself in the Lenasia matter.

The Commission is worried by the Department's decision to quickly move to demolish more houses in other parts of Lenasia on Monday, thus raising further tensions and uncertainty in the residents. The demolitions on Monday happened amidst the court process that the Commission and the Department are engaged in.

The Commission is cognizant of the fact that the area where demolitions happened on Monday is not covered by the court interdict received against

[34] Ahmed, Kayum (2012) interview on Interface
[35] SAHRC (2012a) "Lenasia: SAHRC engages with stakeholders supporting its court application" in *The South African Human Rights Commission* accessed from http://www.sahrc.org.za/home/index.php?ipkArticleID=151 on 26 February 2014

the Department,[36] but we believe further demolitions will put the cloud over the pending court process around demolitions in the same area.[37]

In order to prevent the occurrence of further demolitions, another court order was issued on November 23. The court order called for a cease on any further demolitions. The Department was ordered to engage in no further demolitions but to engage with all stakeholders to find an amicable solution out of court. As a response to this, the Minister of Human Settlements announced the formation of SPLIT which was formulated on November 28, 2012. The SAHRC and other stakeholders mentioned earlier became part of this committee.[38]

On the 6th of December 2012, the Department of Human Settlements announces the formulation of the Lenasia Intervention Framework (LIF) from SPLIT. This framework is to outline the solutions to the Lenasia housing issues. The SAHRC argued that, neither it nor other stakeholders were involved in the drawing up of this framework. It argued that not only were other stakeholders excluded in drawing up the framework but they were not even consulted.

The South African Human Rights Commission would like to express displeasure and disappointment at the manner in which the Department of Human Settlements and Gauteng Department of Housing and Local Government has conducted itself by unilaterally calling a meeting on the Lenasia housing matter without involving other stakeholders serving on the Special Lenasia Intervention Team (SPLIT).

More concerning are the remarks and statements made by the Minister of Human Settlements Mr Tokyo Sexwale to the media at the same meeting in Pretoria in which he appeared to go against the agreements reached in the SPLIT's initial meeting held on the 28th November 2012…

---

[36] The court interdict only covered Lenasia extension 13 as the Department has only began demolishing in this area. The Department then went on to begin demolitions in Lenasia South extension 4 which was not covered by the demolitions.

[37] SAHRC (2012b) "Lenasia: SAHRC dissapointed by the Department of Housing, calls for demolitions to stop pending court process" in *The South African Human Rights Commission* accessed from http://www.sahrc.org.za/home/index.php?ipkArticleID=153 on 26 February 2014

[38] SAHRC (2012c) "Lenasia: SAHRC welcomes and supports the intervention team announced by the Human Settlement Minister" in *The South African Human Rights Commission* accessed from http://www.sahrc.org.za/home/index.php?ipkArticleID=157 on 26 February 2014.

The SAHRC notes with grave concern that despite undertakings at the all-inclusive stakeholder meeting at the Department's Head Office in Pretoria on the 28th of November 2012, processes have been embarked upon, which have resulted in the development and apparent unilateral adoption of the so-called Lenasia Intervention Plan (LIP) to address the crisis in Lenasia.

The LIP has been developed with no consultation at any level with stakeholders, including the SAHRC. In this sense the process adopted despite the timelines imposed for resolution, disregards the order of the South Gauteng High Court in which the SAHRC is in fact the applicant. For the Department to satisfy the criteria of an amicable solution in the matter, the SAHRC believes, at a minimum, consultation was vital between the parties.[39]

Furthermore, the SAHRC raised some issues with the contents of the framework and argues that the government misunderstood the details of the court order.

The SAHRC has reviewed the LIP released by the Department on the 5th of December, and has found material inaccuracies on many fronts including the fact that the plan has referred to a finding by the court earlier in the matter, which is the subject of an appeal, and an incorrect understanding of the court order granted to the SAHRC in November 2012. That order does not give the Commission 30 days in which to investigate the matter, but rather endorses an agreement between the parties to reach an amicable resolution of the matter. More importantly a number of actions are detailed which disregard the impact of outcomes of the appeal in the matter.

Such material inaccuracies are cause for serious concern in attempting to reconcile the general content of the LIP with the equity and compliance-based framework presented at the meeting of the 28th of November 2012. Particularly where immediate discontinuation of basic amenities like access to water are concerned.

[39] SAHRC (2012d) "SAHRC concerned about Minister Sexwale statements and plan on Lenasia" in *The South African Human Rights Commission* accessed from http://www.sahrc.org.za/home/index.php?ipkArticleID=162 on 27 May 2014

> *The intervention plan, for instance, calls for immediate disconnection of "illegal" electricity and water before the process to identify "bona fide" occupiers/owners could be completed. It is our view that view LIP could have been more constructively engaged on and would have been materially more defensible had basic consultation been undertaken*[40]

In addition to this the SAHRC threatened further litigation if its concerns are not met and addressed in 48 hours.

> *We would also like to emphasize that the SAHRC reserves its right to resume litigation in this matter should its concerns not be addressed with urgency in the next 48 hours.*[41]

The disapproval of the framework by the stakeholders in opposition to the demolitions led to further concessions by government. A negotiation process was then engaged in by the relevant parties. After some engagements the LIF was endorsed by the SAHRC. The LIF was to be handed over to the Minister of Human Settlement for approval. The contents of this framework have not been made available to the public pending a review by the Minister. After this process the LIF would be implemented. The LIF stipulated, among others, that there would be inspections by the building regulation body, the NHBRC, on the properties built. This is in order to determine their standing in terms of safety regulations. The information gathered from these inspections would provide light on steps to be taken going forward.

In order to assess these varying situations the NHBRC was to go conduct an inspection of all the houses illegally built on government land. The inspections were deemed necessary for the implementation of the framework. These findings were presented its findings in a meeting with the Portfolio Committee on Human Settlements in November 2013. The findings were tabled as follow:

[40] SAHRC (2012d) Op. Cit
[41] Ibid

No of Houses Completed	Approved Plans	Encroachments	Registered with the NHBRC	Legal Water Meters	NHBRC registered builders
496	**12**	**50**	**4**	**98**	**12**

Furthermore, the reported stated that of the houses inspected, 17 were found to be structurally unsound and presented a danger to the occupants.[42] The NHBRC further recommended that these houses be demolished. This is likely to cause contention as those against the demolition have called for no further demolitions.

4.4 The role of SPLIT

Within this contention surrounding the demolitions there have been moments of engagement and disengagement between the residents and the state. These moments have at times been initiated by the two parties or mediated by a third party. These range from the cooperative negotiations with the MEC to the antagonistic encounters in the courts. The last of these encounters happened within the Special Lenasia Intervention Team (SPLIT) formulated by the then Minister of Human Settlement, Tokyo Sexwale

4.4.1 SPLIT: The failed mediation platform

The formulation of SPLIT came shortly after National Government's intervention in Lenasia following a nationwide outcry against the demolitions. SPLIT was announced in December 2012, a few weeks after the demolitions took place. The formation of this special intervention team is a response to a court order from the South Gauteng High Court ordering halt on the demolitions. The court order also called on "all the parties to engage in a mediated process to find an amicable solution to the Lenasia dispute" (SAHRC 2012c). SPLIT was to be a task-team that involves all the affected stake-holders in the Lenasia Demolitions. The National Minister of Human Settlement, who responded to the demolitions, took the charge of putting this task-team together. It included in it the government (Local, Provincial and National), The National Home Builders Regulation Council (NHBRC), the SAHRC, SANCO, The Legal Resources Centre (LRC) and representatives from the "legal" and "illegal" residents. This list of representatives was meant, by the Minister, to be inclusive of all who had a stake in the matter. For the most

[42] Parliamentary Monitoring Group. Op. Cit

part this list included those whose reaction to the demolitions had a direct influence on the demolitions. This is particularly true of those who opposed the demolitions.

SPLIT became a platform for which to find a solution. The solution resulting from SPLIT would be one that all parties agree to after a process of negotiation. However, the stakeholders each have different mandates and often desire outcomes opposed to those desired by other stakeholders. As such an amicable solution to the Lenasia problem remains elusive.

4.5 Contentions in Seeking a Solution

In a public meeting in Lenasia South after the demolitions took place in that area, Tokyo Sexwale was quoted as saying:

> *The government doesn't negotiate with criminals… We cannot allow lawlessness in a democratic South Africa.* [43]

The statement by the Minister of Human Settlements in his intervention in the demolitions speaks volumes to the attitude of the state in its approach. In its approach the state has mainly sought to delegitimise the claims of the "illegal" residents by claiming their complicity in illegal activities. Many titles were given to these residents by state officials. These names, among others, include "land-invaders" and "land-grabbers." This act of name-calling is meant to classify these residents as criminals and delegitimise their claims as residents.

In entering the negotiations, these residents had to overcome these prejudices against them. It is in this light that we can see the accusation by the residents of government's role in the sale of the land. Stressing an element of guilt on the part of the state is to alleviate the residents of some of the guilt. If state officials are the ones who sold the stands to ill-informed resident then surely the residents cannot be blamed for this.

The state argues that, being the rightful owner of the property, it had the legal right to evict anyone inhabiting their property illegally without any compensation. Furthermore, the state has also challenged the notion of a blanket solution for all residents arguing that it can never accommodate such a solution. This is simply because there socio-economic

[43] Nicolson, G (2012) *Op. Cit.*

backgrounds and situations of these residents differ. Due to this each case is to be considered on its own merits therefore none can qualify on the merits of others.

> *The housing department has abandoned the process. Justice delayed is justice denied. People are losing money and have no homes… The department has told us we are getting an audit of all the properties, but there is no such document*.[44]

4.5.1 Different Claims made

This section further looks at the different claims being made, it seeks to look at how each of the stakeholders justifies their own actions while delegitimising the actions of others.

In their bid to legitimise their action and delegitimise the actions of government the "illegal residents" argued that their rights have been violated. The residents claim that the government showed no concern for their rights in the demolitions. The demolitions have largely been characterised as unjust by these residents.

> *"This is a gross violation of human rights… we understand that those people could have moved into those stands illegally but the action [of demolition] itself is a violation of human rights*"[45]

Baloyi employs the language of human rights as a means to reaffirm the rights that the residents have by virtue of them being human. This is meant to draw away the focus on the illegal activities themselves but focus on their need for housing.

The language of the demolitions being against the poor and marginalised as employed by SANCO has been used to garner public support against the demolition. The understanding of the victims of the demolitions being poor and destitute has been challenged by government and residents in favour of the demolitions. The government have made various claims regarding the targets of the demolitions to counter this image. In a media statement released by the Department of Human Settlements, the Minister, Tokyo Sexwale was quotes as saying:

---

[44] Cox, A (2012) "Legal residents want houses demolished" in *IOL News* accessed from http://www.iol.co.za/news/crime-courts/legal-residents-want-houses-demolished-1.1430800#.Uy72moX4KeZ on 18 March 2014

[45] Mediaforjustice (2012b November, 17) "Lazarus Baloyi - Chair of Concerned Residents, Lenasia" accessed from http://www.youtube.com/watch?v=17568Jh96dM on 27 February 2014

> *"We are not dealing here with land invasions where the poor find themselves having to squat (as is the case) in more than 2000 informal settlements. The Lenasia situation is not about the poor. It's about people who have scammed more than 600 government stands and sold them to unsuspecting people or people who knew this was a crime"*[46]

The government went on further to argue that the demolitions only targeted unoccupied structures:

> *This was only phase one of the demolitions, and in this phase, we were only demolishing half-built and unoccupied structures. No house was demolished that had people already living in it* (Mofokeng 2014, Personal Interview).

The "legal residents" have also supported government in this. Some these residents allege that efforts were made in order to give the false impression that there were people residing in the houses. This was achieved by placing curtains on windows even when the house was not completed. Some residents in favour of the demolitions also allege that other materials such as cloths and blankets were used to give the impression of people living inside.

> *Some of these people put sheets and blankets on the window to make as if they stay here, but they don't. They only came here when they heard that the houses were being demolished* (Lenasia South resident 2013).

All these claims have brought about contentions and pose a challenge towards seeking a solution to the disputes. The next section looks further at these contentions.

4.6 Conclusion

The construction of the narratives of the demolitions is made up on contending claims, rights and legitimisation practices. Among the rights competing are the right to property and the right to housing. The "illegal residents" right to housing is threatened by the

[46] Gauteng Government Online (2012) "The Gauteng Provincial Government's statement on the demolition of illegally-built houses in Lenasia South" accessed from http://www.gautengonline.gov.za/MediaStatements/Pages/TheGautengProvincialGovernmentsstatementonthedemolitionofillegally-builthousesinLenasiaSouth.aspx on 26 March 2014

“legal residents” right to property. Inclusive of the right to property is the ability to make of your property what you wish. This can also be stretched to include the type of neighbourhood one wishes to be in. The type of neighbourhood expressed by the “legal residents” in this study is one free from illegal activities. The “illegal residents” are seen by the “legal residents” to be a hindrance to this vision of the neighbourhood.

The next chapter seeks to explain calls by the “legal residents” for further demolitions. The “legal residents” have for the most part stood in support of the demolitions and have called on for further demolitions. The call for further demolitions is driven by the perceived injustice that they face as the “legal residents” and by a vision of Lenasia which they possess.

Chapter 5 – Visions of the Suburb in Lenasia South

The Suburban Ideal and the Intolerance for Informal Urbanisation

The expansion of cities takes place in informal ways. The shape of the city is informed by the desperate actions of people who have no alternatives but to occupy land illegally.[47]



Figure 5.1 "Legal residents" protest against illegal housing in Lenasia South extension 4
Source: Theo Nkonki EWN 2012

This chapter seeks to give a further understanding of the 'legal residents' motivations for their activist activities in calling for the demolitions. The most salient claim this chapter makes is that the activism of the residents of Lenasia South extension 4 are driven by spatial politics. The spatial politics themselves find their expression in the suburban ideal. The contention of the residents in extension 4 is centred upon the notion of what a suburb should be like and how Lenasia south as a suburb fits into that image.

In making this argument I consider the development of Lenasia into a suburb and the manner in which Lenasia South is attached to this ideal. I firstly begin by reiterating the history of Lenasia's formation. This will give a context to the conceptions of the suburb and their specific expression in Lenasia. I then proceed to look at the desirability of Lenasia as a place of residence. The focus then turns to the residents of Lenasia South

[47] Ruth Hall, Quoted in: Mafisa, I (2012) "This land's not your land" New Age accessed from http://www.thenewage.co.za/mobi/Detail.aspx?NewsID=73039&CatID=1008 on 11 March 2014

and how their politics have been shaped by the suburban ideal. This will be followed by a further discussion on the claims made by the "legal" residents in connection to the spatial politics discussed. After a discussion of these claims a general discussion of chapter will be drawn.

5.1 The Quest for further demolitions

The "legal residents" have been a force concerned with the advancement of the demolitions. Generally each of these residents has been part of the Lenasia community for more than eighteen years and have come out to demand for further demolitions. The residents have organised themselves under various names, including the Legal Concerned Resident's Association, and the People Against Illegal Land Invasion. This resident's group was particularly active in Lenasia South extension 4. The group has taken on various measures to try and deal with what they see as the problem of "land invasion." These include engagement with the Councillor of Lenasia South, efforts to seek legal aid, and the employment of protest action.

In seeking legal aid the "legal residents" approached the Wits Law Clinic which is renowned for helping indigent people on legal matters. Their services are free of charge. However, the Law Clinic "offered no help." The residents would also hold public meetings prior to the demolitions to discuss illegal occupation of land in the area. The Councillor would then be asked to come and clarify some matters in regards to land. Speaking of this the councillor notes:

> *The community would, you know, organise themselves and ask us to come and explain; I would go to [these] public meetings* (Molutsi 2013, Personal Interview).

The primary concern of the meetings was to get clarity on the invaded land, government's involvement and what it was doing about the land invasion. The spokesperson of the residents' group, Busi Hleza, went on to add:

> *[We] were concerned about this whole thing of the illegal houses because we wanted clarity from the government.* (Hleza 2013, Personal Interview).

Various issues were raised during the course of the residents' struggle against the illegally constructed houses. In the expression of these grievances, the first thing that often arose was concerned with the paying of rates and other utility bills. In my interview with Hleza, this was the first thing to be pointed out:

> *We are not happy about these people; firstly, they are stealing our electricity and water* (Hleza 2013, Personal Interview).

The assertion that the "illegal residents" are stealing electricity and water from the "legal residents" became one of the contention points. This accusation stems from the fact that many of the illegally constructed houses have also illegally connected their water and electricity. As indicated in the NHBRC report, only 98 of the 496 inspected illegally built houses had their water legally connected by Jo'burg Water. This means that only 98 of the 496 inspected illegally built houses pay for their water usage. The "legal residents" argue that they are in some ways forced to pay for the water and electricity usage of the "illegal residents." In the protest that was staged by the "legal residents" to call on for further demolitions after the demolitions were halted, some of these grievances were further articulated. One of the "legal residents" was quoted as saying:

> *I am a single mother struggling to pay my bond and water and electricity. These people just move in and illegally connect their services… They say only Joburg Water and City Power can make a case. Is that fair? We are subsidising them.*[48]

This resident is here raising three points; firstly, she is arguing that she is a single parent struggling to make ends meet. Secondly, she contrasts her situation with that of the "illegal residents" whom she claims "just move in and illegally connect their services" implying the lack of financial burden on the "illegal residents." She further states that the "legal residents" cannot do anything about this because when they try to report the alleged illegal connections to the police they are told that only "Jo'burg Water and City Power may open a case." Thirdly, this resident makes reference to the allegations that the "illegal residents'" water and electricity is subsidised by the "legal residents."

[48] Cox, A (2012) "Legal residents want houses demolished" in *IOL News*, 26 November 2012 Accessed from http://www.iol.co.za/news/crime-courts/legal-residents-want-houses-demolished-1.1430800#.Uy72moX4KeZ on 18 March 2014

These claims were advanced by another resident in the same protest action.

> *We pay high water and electricity bills while these people pay nothing. We pay rates and bonds - and they have built for cash. They are not poor people*.[49]

In this statement the resident re-emphasises the contrast between the "legal residents" and the "illegal residents" as being primarily those who pay rates and bonds and those who do not. Those who pay rates and bonds, the "legal residents" are forced to into debt while the "illegal residents" build their houses for cash. This claim is made in order to strengthen the call for further demolitions. In this claim the "legal residents" are that they are being taken advantage of and are in fact victims. Figure 5.2 below is an image of the "legal residents" protesting for further demolitions. The residents can be seen here showing off their utility bills to demonstrate that they pay for their water and electricity.



Figure 5.2 Residents showing off their utility bills during a protest in favour of the demolitions. Source: Daily Maverick 2012

[49] Ibid

The "legal residents" further claim that their concerns have been neglected by the government and those advocating for the "illegal residents." In this protest action another resident was quoted as saying:

> *What about us legal residence* [*sic*]*, we have been paying rates and taxes and bonds? Who do we turn to?* [50]

Hleza, the spokesperson of the "legal resident's" group further articulated some of these concerns.

> *It is not fair what is happening to this community because we don't know what to do. These people keep on building… And I'm telling you these people are not needy people like the people government is building for who don't have money, who don't have houses. If you could see the cars that they're driving; they're driving posh cars. So these people really, they do have money. So really, government is really failing us, it's too long, it's over a year now. People are losing interest in our country, can you imagine, we're not paying rent, we're paying bond, we bought here. When I went on pension I paid off my house. This house is paid off and that money when I count it I would have bought myself a car with that money. But I just said no let me pay up this bond. Most of them are still paying bond, we've got this electricity, we've got water. We are paying rates and taxes (Hleza 2013, Personal Interview).*

In this quote, Hleza makes several claims. The first is the claim of the helplessness of the "legal residents." Hleza is here making the argument that the government is failing them as "legal residents" in that it is failing to protect their interests. Secondly, she makes the point that the "legal residents" are actually property owners and not 'tenants' who have a vested interest in the community. Hleza further boosts this claim by pointing out that she is a faithful homeowner who paid off her house when she had the opportunity to do so. However, it has to be noted that it took her pension money to pay off the bond. This tied with the fact that many in the community are still paying off their bonds points to the financial struggles that the "legal residents" face. She then contrasts this image with that

[50] Hunter, Q and Vadi, A (2012) "Lenasia South residents support demolitions of illegal houses – Video" *CII broadcasting* accessed from http://www.ciibroadcasting.com/2012/11/26/lenasia-south-residents-support-demolitions-of-illegal-houses-video/ on 02 June 2014

of the "illegal residents" who are "driving posh cars." These she claims are not needy people. This is to move away from the claims made by some of the victims of the demolitions and SANCO that the demolitions targeted the poor and marginalised. Hleza went on to make further claims:

> *I mean there are people who are really really concerned. Some of our concerned residents even went to an extent of googling and checking on other people and then they said this one is staying in Soweto, this one is in Sandton. So they ["illegal residents"] are building these things for renting. Some of them are at Magson Manor[51], others in Soweto, others in Ennerdale. And if you can go to Magson Manor, not one illegal house, and some of them are taxi owners who own more than four taxis* (Hleza 2013, Personal Interview)

Hleza here makes the claim that the "illegal residents" are not residents as such but they are essentially landlords who are built the structures in order to generate income from them. She argues that through some investigations that the community carried out they discovered that the "illegal residents" have a primary residence elsewhere. This is to point out that according to the "legal residents," the "illegal residents" are in no worse economic situation that they. If anything, the "legal residents" claim that the "illegal residents" are in a better economic standing.

This last claim considered ushers in another claim of unrepaid loyalty to the law. This is a claim that results from the perception that others benefitted from breaking the law. In the same protest action spoken of earlier that was undertaken by the "legal residents" another resident was quoted as saying:

> *Enough is enough. We have been living here legally for over 20 years. If it is so easy, we will also start taking land for our children to build.*[52]

The restraint of the law seemed to have worked, at least for this resident, as a deterrent against illegally occupying land. The claim made by the resident here is that "if the law is ineffective in dealing with illegal activities then we will also use it to our benefit." This

[51] Extension 7 of Lenasia South
[52] Cox, A (2012) *Op. Cit.*

resident is apparently not the only one who feels this way. This was also pointed out to me by the local Councillor of Lenasia South regarding some residents:

> *You know some law abiding citizens would say "had I known, I would not have listened to you. From where I am sitting, I realise by listening to you, I wasted my time and I acted like a moegoe,[53] because Klevas[54] are there, they went on, they didn't listen to you and there they are* (Molutsi 2013, Personal Interview).

There arises a sense of missed opportunity from the "legal residents." A sense that abiding by the law has resulted in them missing out on the opportunity to acquire land freely. This sense of missing out tied in with the claim of unfair treatment of the "legal residents" contributes to the "legal residents'" call for further demolitions. The calls for the demolitions are further entrenched by ideas of the suburb in Lenasia. This next section looks at how Lenasia fits the idea of the suburb.

5.2 The Development of Lenasia

Within the south of Johannesburg, Lenasia is unrivalled in financial and economic prowess. Lenasia established itself as the economic hub of the Johannesburg South region. It has a well established CBD, two malls, various car dealerships (including a Mecerdes-Benz dealership), branches of national banks and industrial factories all of which have contributed to its economic growth (Gbaffou *et.al* 2013, 144). In addition to the economic activity, Lenasia has over the years developed to be a fairly affluent residential neighbourhood with well designed and expensive houses. The success of Lenasia as a suburb makes it a desirable place to live in for many who are living in the sorrounding areas.

The creation of Lenasia as an Indian township is in many ways similar to the creation of other residential township in the south of Johannesburg. Many of these townships were created as a result of segregationist policies that were adopted by the apartheid regime. Such is the history of the coloured townships of Eldorado Park, Ennerdale, Westbury, Newclare and Riverlea. This also extends to the black townships of Soweto. The

[53] Someone who lacks good judgement
[54] Streetwise people

planning of these townships was such that they were all concentrated in the south of Johannesburg (Beall et.al 2002, 50-51). Public train services and bus services were available to link these townships to the CBD. The creation of these racial areas was achieved through measures taken by the apartheid government to remove blacks from the city centre and inner-city neighbourhoods. This was done through forced removals such as occurred in Sophiatown. Those who were forcibly removed were often forced to relocate to the standardised houses within these areas (Beall et.al 2002, 50).

The black, Indian and coloured working class were forced out of the north of the city into to the south. Thus the south was increasingly populated by non-white working class citizens living the northern suburbs as mainly white middle-class spaces. The development of the city followed this projection of the rich north and the poor south. As Beall et.al (2002, 51) correctly points out "[t]hese apartheid policies of residential segregation therefore shaped suburbanization in such a way that black and working-class suburbs were concentrated in the south of the city." The black suburbs of the south were commonly referred to as 'townships' in comparison to the northern 'suburbs' of Johannesburg. There emerged a contrast between the suburbs of the north and the townships of the south (Mabin 2005, 48). Thus in South Africa the term 'suburb' has historically had a close connection with 'white.'

In 1994 South Africa moved into a new democratic dispensation that saw many of apartheid's laws abolished, including the Group Areas Act. This brought about the freedom of movement to all citizens of South Africa, including blacks. There was at this time an already existing, yet small, black middle-class. Over the years there has been an expansion of this black middle-class (Morris 2004, 3-4). Many of these black middle-class individuals have moved into these previously 'white' areas. The movement of non-whites into the suburbs have changed the complexion of suburbs from 'white' to a more multi-cultural tone. As such the term 'suburb' is slowly evolving to encompass notions of 'middle-class' rather than a strictly 'white' understanding. However, whatever understanding one attaches to the concept, it still bears notions of affluence, privilege and success.

However, this privilege of moving into the suburbs remains unattainable for the majority of South African citizens. Many black South Africans continue to reside in areas assigned to them by the apartheid regime (Morris 2004, 2). This is also true concerning

Indians and coloureds, be it by choice or circumstance. However, a portion of the Indian middle-class has moved out of their previously designated Indian neighbourhoods into historically white areas. This move has also been coupled with the moving-in of blacks within the Indian neighbourhoods. The moving-in of blacks to Lenasia is largely due to the close proximity of Lenasia to Soweto and the ideal of the suburbs which Lenasia presents. This has led to the Indian areas being more racially mixed (Morris 2004, 2). Such is the case in Lenasia.

5.3 The Desired Suburb

Lenasia has over the years experienced a great demand for housing in the area. The demand in housing has led to the growth of the township. Lenasia has continued to grow with the recent additions of extension 13 and the establishment of Lenasia South in 1984. The establishment of Lenasia South marked the biggest extension of Lenasia (South African History Online, date unavailabe: 4). Lenasia South extension 1 and 2 were the first to be populated in the later years of apartheid. Due to segregation policies still being effective at that stage, extension 1 and 2 of Lenasia South were largely populated by Indian people. To this day these two extensions hold a greater proportion of Indians to Blacks. Extension 4 was, on the other hand, opened to entry-market bonded houses in the mid-1990s. Many black and coloured families that were previously unable to move into an Indian suburb were now able to do so, if they could afford to pay a bond. Lenasia South thus provided the opportunity for lower-income home-owners to live in a multi-racial environment. The prevalence of Indians in the area also seems to be an attraction to the area in and of itself. Speaking to the media, one of the "illegal" residents whose house was being targeted for demolitions stated her reasons for wanting to stay in Lenasia as such:

> *I don't want to move anywhere. The reason I came into this neighbourhood is because Indians are very conservative in their culture. Raising a child in this neighbourhood makes sense to me, that I will raise a girl child in this neighbourhood where people are very conservative… where they will never be exposed to drugs, where they will never be exposed to a whole lot of hectic lifestyles that we find in other neighbourhoods* (Lenasia extension 13 "illegal resident," interview for Media for Justice).

The views espoused by this resident tie in with the perceived tranquillity of the suburbs (Chipkin 2012, 60; Morris 2004, 2). This goes with the removal of social ills that are prevalent within society. In this sense the 'conservative' nature of the Indian community is seen to be disapproving of "hectic lifestyles that we find in other communities." The lifestyle in Indian communities is perceived to be slow-paced and peaceful. The reality, however, seems to challenge these notions. Lenasia and indeed Lenasia South are faced with many of the social challenges that face other neighbourhoods in the area. One of these challenges is the challenge of drugs in the neighbourhood.

Lenasia is home to a private rehabilitation centre under the SANCA umbrella that was established in 1990. This agency known as the SANCA Nishtara Alcohol & Drug Rehabilitation Centre was established with the aim of fighting substance abuse in Lenasia and its surrounding areas. Shahida Kazie, Director of Nishtara explains the extent of the drug problem in Lenasia as such:

> *[p]eople are openly dealing. You can report as much as you want to but it seems that nothing happens to these people. It has become such a brazen act now because they give it to kids to sell in schools. Youth, children are dealing in schools; that is how brazen it has become.* (Shahida Kazie, interviewed in Molopi and Mkhize 2013, 173)

5.4 Dreams Unfulfilled

> *I grew up in Soweto, when I came here in 1996 I told myself that I am going to a suburb. I refused to go to Protea Glen and Vosloorus. I said no, I am going to Lenasia South* (Hleza 2013, Personal Interview)

Busi is the spokesperson of a resident group in support of government demolition of houses that were illegally built on government land. The above statement illustrates the suburban promise that many saw in Lenasia. Lenasia South, when taken as an extension of Lenasia, presented the fulfilment of the promise. Busi recalls that to her moving into Lenasia South was akin to moving into a 'suburb.' She further states that she had the opportunity to move into other similarly placed neighbourhoods in Vosloorus and Protea Glen but rather opted to move in to Lenasia South. This is because to her, Lenasia South was a suburb and Protea Glen and Vosloorus were not.

However, Busi's view on the suburban nature of Lenasia South has since changed. The statement above was extracted from a broader statement in which she states her disapproval of what Lenasia South turned out to be. Comparing Lenasia South with Soweto and other black townships Busi asserts:

> *If you go to Soweto there is so much improvement but here* [in Lenasia South] *everything is just… you know, I don't know what is happening. Instead of building things that will be beneficial for our children, here are the illegals. There are no parks here, there are no parks in this place, no place for recreation… There is no development in this area. You know you go to Soweto and you're impressed and then you're crying because you say my goodness I thought I was going to a suburb. This is not a suburb it's a location. I grew up in Soweto, when I came here in 1996 I told myself that I am going to a suburb. I refused to go to Protea Glen and Vosloorus. I said no, I am going to Lenasia South. Look at Lenasia South, you go to Protea Glen there is so much improvement, there is development, you go to Voslo, there is development. Here I don't know. There is no investment here. Instead we are being dragged down* (Hleza 2013, Personal Interview).

For Busi, living in a suburb means development and abundance of recreational facilities. This is of course in line with the concept of the suburban ideal. Lenasia South ceases, in her eyes, to become a suburb when it lags in development as compared to other neighbourhoods. A suburb, in this sense, is seen to be a place where there is constant development. In fact, the lack of development in the form parks and other recreational activities relegate Lenasia South to the status of 'a location.' A 'location' in this instance serves the same meaning as 'township' although with a more derogatory tone. This lack of development, she identifies, as being caused by the existence of illegal houses. In the next section I will consider the ways in which the apparent dislocation between *what is* and what *ought to be* is addressed.

5.5 Struggling for the development of the suburb

Busi's words carry much weight as the spokesperson of the residents' group that is in support of the demolitions. Also as a chosen spokesperson for the group her words are indicative of the attitude of the group in general. This group has employed various strategies and explored various avenues in order to try and get the demolitions to take

place or to continue. Before analysing the details of their mobilisation, I would like to first explore the motivations behind their actions. Following Purcell (2001) I argue that the actions of the residents in Lenasia South can be best analysed using a spatial framework.

An analysis using a spatial framework is best suited to analyse the activist actions of these residents because their political interest framed out of a spatial vision. By this I mean that the resident's concern is primarily linked with the space they inhabit as residents of Lenasia South. They have desires and aspirations for this particular space and wish to exercise certain control over how it should develop. This spatial vision is itself complex and it encompasses notions of class, race, gender, nationalism and so forth (Purcell 2001, 181). As such, an analysis based only on one or two of these components will inevitably be incomplete. An analysis that moves from a spatial perspective is more suited as these social dynamics occur within space.

5.5.1 The Politics of Space

Space is here understood to manifest itself in two senses. Firstly, space consists of that which is tangible; the concrete material surrounding. Secondly, it consists of "abstract ideas, thoughts, and feelings about these surroundings" (Purcell 2001, 178). In other words our conception of space should look beyond the concrete but also incorporate the abstract. When space is conceived in this fashion then then the actions of the residents of Lenasia South become spatial in that; firstly, they aim to reshape their concrete surroundings. Secondly, they device a normative approach by which the concrete surroundings are to be seen and thought of (Purcell 2001, 178).

In addition to this understanding of space there is third abstraction of space as *everyday experiences* which we will refer to as *lived space* (Lefebvre 1991, 38-41; Soja 1996, 66-68; Purcell 2001, 188-189). This third facet of space is made up of mingling of the two abstractions of space developed above. It is "a fusion of objective material space and subjective conceptual space (Purcell 2001, 188)." Lived space is conceived at the moment when we consider the material surroundings and begin to give meaning to their existence and what they stand for. By walking into a neighbourhood, one interacts conceptually with its material space. The conceptual space is guided by the material space and vice-versa. There is a constant interaction between these two and must

naturally develop together. Everyday lived experience must involve both material and conceptual space (Purcell 2001, 188-189).

A sort of spatial dissonance occurs when the conceptual space and the material space fail to develop together. This spatial dissonance is a mismatch between how residents envision how their neighbourhood should be and how they perceive it to be. This creates a problem for them that need to be resolved. It is this dissonance that leads homeowners to take action in order to balance things out. This is done in order to realign their normative ideals of what space should be like and the material reality (Purcell 2001, 189). The political action taken is to change the material structure to fit into the normative framework. The approach of changing the material surrounding is particularly evident in those who espouse to the suburban ideal. The only other option outside of changing the material reality is to change the normative approach of how the neighbourhood should be. Taking this action would mean altering their conceptions of how the suburb should be or even a total surrender of the suburban ideal.

5.6 A closer look at Lenasia South

Busi along with some of the resident who are most active in challenging the illegally-built houses reside in the area around Troy Peak Street in extension 4. The image below provides an aerial view of Troy Peak and its surroundings.



Key	
	Illegal houses
	Mainly calling for demolitions

Figure 5.2. Aerial view of the neighbourhood around Troy Peak Street, Lenasia South extension 4. **Source: Molopi 2014**

The image illustrates the stands in this section of Lenasia South. The numbers on each stand indicate the stand numbers as they are registered by the City of Johannesburg. The stands highlighted in orange are stands owned by the Gauteng Provincial Government. Upon closer look at these stands one can see that there are houses that have been built on these stands. It is these houses that are on these stands that are said to be illegal. Of course, this problem is not only limited to this section of Lenasia South but is spread out throughout the area with prevalence in extension 4. The area highlighted in blue represents the houses of the residents who have been most active in calling for the demolitions.

Two things are apparent among these residents calling for the demolitions. The first is the close proximity that they live with these houses that have been built illegally. The second

is that they have a greater concentration of these houses in one place. The lived experience of the residents in these houses is to a greater extent shaped by the exposure to the illegal houses. Every time these residents step out of their gates they are faced with the reality of the suburb they are living in. They are forced to confront this reality more often than many other residents of extension 4 are. The dissonance between the conceptions they have of what Lenasia South should be as a suburb, compared to what they see it as, causes them to act. These 'legal residents' have made significant improvements to their houses in order to improve their material surroundings. The picture below shows some of the legal houses on Troy Peak Street.



Figure 5.3. Legal houses on Troy Peak Street.

Source Molopi (2014)

While these 'legal' residents have made improvements to their homes they have had to deal with seeing little improvements in their surroundings. For the most part, they have had to deal with the space that is now being occupied by the illegal houses being vacant. The vacancy of this space meant that it was uncared for and nothing noteworthy occurred in that space. Speaking about the then vacant land, Busi remarks that:

''When we asked about this land here, I don't remember who we asked, but when are you building this side? They said no it's a private site. So government has no power about this site, this was until these people came and started building" (Hleza 2013, Personal Interview)

These residents have always shown a concern for their immediate surroundings. In this instance, the residents were given false information regarding the development of this site. Figure 5.4 below shows a satellite image of Troy Peak Street and the vacant space around it.



Figure 5.4. *2009 Aerial photograph of Troy Peak and Surroundings.* Source: City of Jo'burg

In the image above the red and yellow numbers are the stand numbers as given by City of Johannesburg. The shaded area illustrates land that belongs to the Gauteng Provincial Government. Upon close inspection, one can see that, at this stage in 2009, these stands lay vacant. This is in contrast with *figure 5.2* which is aerial image of the same area taken in 2012. It was this abundance of vacant space that led the residents to question government on what it intended to do with the space. This was until their focus was then shifted to deal with the illegal houses that were constructed. The perception of the 'legal residents' is that these structures are of a considerably low quality and that they do not add value to the neighbourhood. In fact, the claim is that the illegal houses bring about a decline to their own property values. Speaking to me about this, Busi stated that,

> *"I know for sure that the value of our properties has decreased. I personally went to check not so long ago and it was confirmed that indeed the value has gone down* (Hleza 2013, Personal Interview).

Figure 5.5 below shows some of the houses that have been illegally built on Troy Peak Street. From this image one can see a contrast between the houses built by the "legal residents" and the "illegal residents". These houses built by the "illegal residents" are not aesthetically appealing and do not conform to the suburban ideal envisioned by the "legal residents". There is no real appropriation and use of the space between houses and the road.



Figure 5.5. *Houses that have been illegally built on government land on Troy Peak Street*.
Source: Molopi 2014

5.6.1 More on the Claims

The concern of the residents of Troy Peak Street is not only limited to the physical appearance of the houses. Another perception given by the residents concerning these houses it is that they see existence of these houses as fostering an environment of crime. To them the existence of these houses promotes other forms of criminal activities. Busi argues that:

> *"There are so many wrongs that have been discovered in these people. At Mount Logan [Street] there was this particular house which was discovered that there was a factory going on there; piracy of the CDs. And they even found a money-counterfeiting machine on another house on this other side not far from us* (Hleza 2013, Personal Interview)*."*

Busi related this to me to point out two things; firstly that the people who built their houses illegally do not have the best interest of the community at heart. Secondly, she wanted to highlight her belief that these residents are not are not victims but are perpetrators of crime.

This element of criminality by those who built their houses illegally was not only expressed by Busi. Another resident was quoted as saying:

> *"We cannot stand back and see crime unfolding in front of our eyes and condoning it. This is infringing on our rights. Why doesn't the Human Rights Commission see that?" (Sphiwe* Gumede, Quoted in Cox 2012).

This statement was made during a protest by the "legal residents" in opposition to the halting of the demolitions due to the court order imposed on government. This protest took place when Minister Tokyo Sexwale was due to visit Lenasia South. Sphiwe is here making the claim that their rights are being infringed upon by being forced to accommodate the 'illegal residents.' He is making the claim that the SAHRC has focused too much on the rights of the 'illegal residents' sacrificing the rights of the 'legal residents.' It is not immediately clear what rights he is mobilising for the 'legal residents' but his claims are leaning more on the right to live without fear in a safe environment. The residents claimed that they were overwhelmed by the rapid growth of the 'illegal structures.' On this same protest another resident was quoted as saying

> *"[t]hey are popping up all over... We wake up to new neighbours every day*" (Nokulunga Madonsela, Quoted in Cox 2012).

At the time of conducting the research the resident bemoaned the fact that they have not seen any progress in the resolving of the issue. The residents see the demolitions of the illegal houses as being the only acceptable solution. For the improvement of the

neighbourhood is tied in with the removal of the illegal structures and having new legal structures being built.

> *"We want to see improvement, improvement in our area and these houses must be removed and put proper houses, proper structures. We are not saying that we don't want houses but they must go through the right channels like we did* (Hleza 2013, Personal Interview)*."*

While calling for the demolitions, the residents seem to be more concerned with the legal process. It is not necessarily that the houses are there that is a problem, but rather that they are there but not due to the right legal processes. Secondly, it is because they are there as a constant reminder of what their suburb is not.

5.7 Conclusion

The suburban ideal has found its application expressed in different ways and within different contexts. In this chapter I have argued that the suburban ideal has been the motivation behind the activist actions of the 'legal residents' in Lenasia South. I have used examples from the area's extension 4 to voice some of the claims made by these residents. In considering this I have especially taken examples from the residents of Troy Peak Street in extension 4. Their political action is driven especially by their lived experience in their immediate space. I have argued for a spatial analysis of the actions the residents. This is in line with seeing the suburban ideal as a spatial vision.

The spatial politics engaged by the "legal residents" can be contrast to the politics of stealth engaged in by the "illegal residents." In the attempt to fit into the neighbourhood and not attract attention to themselves they have almost been rendered almost invisible. As a result the "illegals residents" do not seem to form 'a community' that one can interact with and find compromises with. They are scattered or in hiding while some are just tenants to landlords who do not reside in the area. .

Chapter 6 – Concluding Chapter

At the time of writing this in October 2014, nearly two years after the demolitions have taken place, there has not been much progress made in resolving the dispute. Following the submission of the Lenasia Intervention Framework (LIF) to the Minister of Human Settlements there have not been any further developments in the matter. As a way of conclusion this chapter reconsiders some of the stakeholders in the dispute. Each of these stakeholders is considered along with a restatement of their legitimation and delegitimation practices. Furthermore the study concludes by looking for a possible solution in the form of land titling.

6.1 Legitimation/Delegitimation Practices

In this section I consider some of the legitimation and delegitimation process that have been engaged by some of the actors in the Lenasia demolitions. These may include ways in which they seek to legitimise their own actions or delegitimise the actions of actors. This section will also highlight how these actors understand their own legitimacy and that of others. I will look at each actor and assess their actions individually in each of the following paragraphs.

The "illegal residents" The first legitimising claim from the "illegal residents" is that they are South African residents who are in need of shelter. Furthermore, these residents make the claim that they did not know, nor had any way of knowing, that they were being scammed. The residents claim that they are victims and as such should not be punished. These residents, on the other hand, seek to delegitimise the actions of the state by arguing that they have been unfairly treated by the state in the demolitions.

SANCO has been at the forefront of challenging the demolitions in favour of the "illegal residents." The claims advanced by SANCO are that the demolitions only serve to marginalise the poor. SANCO's strategy was to try and mobilise in the grassroots and be widely outspoken in the media. SANCO was, however, not very successful in getting the residents of Lenasia to rally together against the demolitions. One of their greatest inputs to challenging the demolitions was the formation of the human shield to prevent the demolitions. Much of their actions serve to legitimise the actions of the "illegal residents" and delegitimise the actions of the state. In doing this, SANCO likened the actions of the state to that of the apartheid regime. SANCO further made the argument

that it was in fact government's fault that the land was illegally sold due to failure of government to develop the land.

The SAHRC was influential in bringing in the human rights discourse into consideration in the dispute. The SAHRC was mostly influential in forcing the government to halt the demolitions through the court. The argument advanced by the SAHRC was particularly concerned with the manner in which the demolitions were enforced. The work of the SAHRC served to delegitimise the actions of the state.

The State has for the most part defended its actions by seeking to delegitimise the "illegal residents". In doing this the state have labelled the "illegal residents" as "land invaders" and "land grabbers" among others. The state has also made reference to the court processes engaged in prior to the demolitions. This reference is made in order to legitimise the actions of the state through legal processes engaged in. Furthermore, in the discussion with the "illegal resident" the state has refused to recognise the residents as a group but treated them as individuals. This is a way to hold each of the residents personally responsible for their actions and remove their claims to being the structural victims of a scam and a housing crisis more generally. This can be seen as another way to delegitimise the residents' claims in general. .

The "Legal Residents" have also in this instance made various claims in favour of the demolitions. These include the claim of being good citizens as rate payers and property owners. They present themselves as victims of the illegal urbanisation of their neighbourhood: not only for the decreasing value of their property, but for the decreasing use value of their neighbourhood resulting from the lack of investment, improvement and a sense of neighbourliness. Furthermore, they argue that they have to bear the cost of the theft of services from "illegal residents". For the "legal residents" those who built their houses illegally do not have the best interest of the community at heart.

For the "legal residents" the only legitimate way of being a good citizen is through formal means. These residents have sought to delegitimise the claims made by the "illegal residents" particularly the claim of being poor and landless. The "legal residents" argue that the "illegal residents" are not are not victims but are perpetrators of crime.

6.2 As a way of conclusion - On Possible Solutions

There appears to be no winners in this battle of legitimations and delegitimations. This is primarily because the claims advanced for and against the demolitions are equally appealing. The manner in which the demolitions took place is highly reminiscent of apartheid forced removals. Those opposing the demolitions did well in bringing this up. These images are incompatible with aspirations of a democratic society committed to human rights. However, the claims advanced against illegal activities need also be headed.

What follows next is one possible solution to restoring the suburban dreams of the 'legal residents' while not denying the 'illegal residents' to share in the dream should they so wish. Any solution proposed should cover three main things. First, it should not create an environment for further illegal occupation to occur. This would require a concerted effort by both the 'legal' and 'illegal' residents and from government. Secondly, it should not carry forth further evictions. Lastly, it should not disregard the claims of the "legal residents".

6.2.1 A look at Land Tenure

I consider the granting of land tenure through initiating a legal titling process as a solution for its ability to provide two things. First, the ability to bring about regulation of the illegally built structures. Second for its ability to foster an enviroment conducive for home improvement. Having housing tenure has often been thought to be instrumental in people investing in their homes and making significant improvements to them (van Gelder 2013, 734). However, it is also true that the titling process is not absolutely necessary for homeowners to make significant improvements. Rather it is when homeowners have a psychological sense of security or percieved security that they make these improvements Van Gelder (2009).

There are certain circumstances and actions by the government that can bring about perceived security. These include the provision of services and infrastructure by the government, length of occupation, size of settlement and degree of community organisation (Van Gelder 2009, 128). The biggest source of insecurity among the 'illegal residents' is hostile state action aimed against them which includes the demolitions. As such, a more 'friendlier' interaction from government can help bring about perceived

security. Other elements that can bring about perceived security is the length of occupation and community cohesion (Van Gelder 2013).

The ‘illegal residents’ whose houses have been of a sub-standard quality need have perceived security of tenure to bring about the improvements to their homes. The legal titling process will serve to bring regulation to these houses and will pacify the ‘legal residents’

The legalisation of tenure facilitated by a titling process has been purported to bring about many benefits. These include, among others, encouraging investment in housing and improving access to formal credit (Payne 2001, 421-422). In the former case it is thought that when individuals are assured of having legal protection to their properties they will invest and improve on the property. As such it is thought that one will only invest in an area where property rights are enforced by law. Conversely, property owners that are not protected by law will not find an incentive in improving on the property (Van Gelder 2009, 128). As such, it is argued that those who face imminent eviction will have no incentive to bring about an improvement to their properties. In order to bring this sense of security a titling process can be entered into in order to bring about a sense of security from the “illegal residents” necessary for the improvement of their homes.

Bibliography

Arimah, B (1997) "The Determinants of Housing Tenure Choice in Ibadan, Nigeria" *Urban Studies,* Vol. 34, No. 1, pp.105 124.

Baxter, P and Jack, S (2008) "Qualitative Case Study Methodology: Study Design and Implementation for Novice Researchers" in *The Qualitative Report,* Vol. 13, No. 4, pp. 544-559.

Beall, J., Crankshaw, O and Parnell, S (2002) *Uniting a Divided City*. London: Earthscan Publications Ltd.

Beavon, Keith (1992) "Some Alternative Scenarios for the South African City in the Era of Late Apartheid" in Drakakis-Smith, David (ed) *Regional Change in Southern Africa*. London: Routledge.

Bénit-Gbaffou C (2008) "Are practices of local participation sidelining the institutional participatory channels? Reflections from Johannesburg." *Transformation* 66-67, pp. 1-33.

Bénit-Gbaffou, C (ed) (2013) *Community Activists Tell Their Story: Driving Change In Johannesburg & Ekurhuleni*. Johannesburg: CUBES & NRF SARChI: Development Planning and Modelling, Wits University. Accessed from http://www.wits.ac.za/academic/ebe/archplan/4869/urban_studies.html on 27 February 2014.

Bénit-Gbaffou, C and Oldfield, S (2014) "Claiming 'Rights' in the African City: Popular Mobilisation and the Politics of Informality in Nairobi, Rabat, Johannesburg and Cape Town**"** in Parnell, S. and Oldfield, S. (eds), *A Routledge Handbook of Cities of the South*. Routledge, London.

Bénit-Gbaffou, C, Molopi, E & Tunce, L (2013) *Johannesburg South: Kapok, Lenasia, Noordgesig* in Benit-Gbaffou (ed) "Community Activists Tell Their Story: Driving Change in Johannesburg & Ekurhuleni" CUBES & NRF SARChI: Development Planning and Modelling, Wits University available from http://www.wits.ac.za/files/9oih7_780966001372335762.pdf.

Benjamin, S and Raman, B (2011) "Illegible Claims, Legal Titles, and the Worlding of Bangalore" *Revue Tiers Monde.*

Calderón, F., Piscitelli, A., and Reyna, J (1992) "Social Movements: Actors, Theories, Expectations" in Escobar, A and Alvarez, S (eds) *The Making of Social Movements in Latin America: Identity, Strategy and Democracy*. Boulder: Westview Press.

Chatterjee, P (2004) *The Politics of the Governed: Popular Politics in Most of the World*. New York: Columbia University Press.

City of Johannesburg http://ims.joburg.org.za/joburg/viewer.aspx accessed on 20 March 2014.

Coggin T, and Pieterse, M (2012) "Rights and the City: An Exploration of the Interaction Between Socio-economic Rights and the City" *Urban Forum* (23), pp.257–278.

Connelly, S (2011) "Constructing Legitimacy in the New Community Governance" *Urban Studies*, Vol. 48, No. 5, pp.929–946.

Connelly, S., Richardson, T, and Miles, T (2006) "Situated legitimacy: Deliberative arenas and the new rural governance" *Journal of Rural Studies* 22, pp.267–277.

Creswell, J (2003) *Qualitative, quantitative, and mixed methods approaches* (2nd ed.). Thousand Oaks, CA: Sage.

Creswell, J (2007) *Qualitative enquiry and research design. Choosing among five approaches.* California: Sage.

Creswell, J (2009) *Research Design: Qualitative, Quantitative, and Mixed Methods Approaches*. Thousand Oaks: Sage Publications.

Darbina, G, and Luse, A (2012) "Development of Suburbs in the Context of Post-Socialist Consumption Models: The Case of Pierīga" *European Integration Studies*, No. 6, pp. 101-110.

de Vos, P (2001) "*Grootboom*, the right of access to housing and substantive equality as contextual fairness" *SAJHR* vol. 17, pp. 258-276.

Desai, A (2008) "The role of social networks in migrant access to housing in Lenasia" Unpublished Masters Dissertation. University of the Witwatersrand: Johannesburg.

Dickson-Swift, V., James, E., Kippen, S and Liamputtong, P (2007) "Doing Sensitive Research: What Challenges Do Qualitative Researchers Face?" *Qualitative Research* Vol. 7, No. 3, pp. 327-353.

Dickson-Swift, V., James, E., Kippen, S and Liamputtong, P (2009) "Researching Sensitive Topics: Qualitative Research as Emotion Work" *Qualitative Research* Vol. 9, No. 1, pp. 61-79.

Dinath, M (1972) *Handbook of Lenasia*. Johannesburg City Council: Johannesburg.

Dryzek, J and Dunleavy, P (2009) *Theories of the Democratic State*. Basingstoke: Palgrave Macmillan.

Guenther, K (2009) "The Politics of Names: Rethinking the Methodological and Ethical Significance of Naming People, Organizations, and Places" *Qualitative Research* Vol. 9, No. 4, pp. 411-421.

Heller, P and Ntlokonkulu, L (2001) "A Civic Movement, or a Movement Of Civics?: The South African National Civic Organisation (SANCO) In The Post-Apartheid Period" *Centre for Policy Research*. Research report no 84.

Hinchcliffe, T (2005) "Elusive Suburbs Endless Variation" *Journal of Urban History,* Vol. 31, No. 6, pp. 899–906.

Hleza, B (2013) *Personal Interview.*

Houtzager, P & Gurza Lavalle, A (2010) "Civil Society's Claims to Political Representation in Brazil" *Studies in Comparative International development* Vol. 44, No. 23, pp. 1-29.

Huchzermeyer, M (2003) "Housing Rights in South Africa: Invasions, Evictions, the Media, and the Courts in the Cases of Grootboom, Alexandra, and Bredell" *Urban Forum*, Vol. 14, No. 1,

Huchzermeyer, M (2010) **"**Pounding at the Tip of the Iceberg: The Dominant Politics of Informal Settlement Eradication in South Africa" *Politikon: South African Journal of Political Studies*, Vol.37, No.1, pp.129-148.

Jenkins, P (2001) “Strengthening Access to Land for Housing for the Poor in Maputo, Mozambique” *International Journal of Urban and Regional Research*, Vol. 25, No. 3, pp. 629-648.

Lee, R. (1993) *Doing Research on Sensitive Topics*. London: Sage.

Lefebvre, H. (1991) *The production of space.* Oxford: Blackwell.

Levi, M, Sacks, A & Tyler, T (2009) “Conceptualizing Legitimacy, Measuring Legitimating Beliefs” *American Behavioral Scientist,* Vol. 53, No. 3, pp. 354-375.

Lodge, T (2003) *Politics in South Africa: From Mandela to Mbeki.* Cape Town: David Philip.

Lombard, J (1996) “Housing Strategies and the Urban Poor in South Africa: A Brief Critical Evaluation” *Working Paper* No. 80.

Lund, C (2006) “Twillight Institutions: Public Authority and Local Politics in Africa” *Development and Change*, Vol. 37, No. 4, pp.685–705.

Lund, C (2007) *Twilight institutions: Public authority and local governance.* Oxford: Blackwell

Mabin, A (2005) “Suburbanisation, Segregation and Government of Territorial Transformations” *Transformation*, vol. 36, pp. 41-64

Magwaba, P (2013) *Personal Interview*

Malpass, P and Murie, A (1999) *Housing Policy and Practice*. Palgrave: United Kingdom

McCarthy, J and Zald, M (1977) “Resource Mobilization and Social Movements: A Partial Theory” *American Journal of Sociology*, Vol. 82, No. 6, pp. 1212-1241.

Milling-Kinard, E. (1996) “Conducting Research on Child Maltreatment: Effects on Researchers”, *Violence and Victims* Vol.11, pp. 65–9.

Mitchell, D. (2003) *The Right to the City*. New York: Guilford Press.

Mofokeng, M (2014) *Personal Interview*

Mohammed, S and Dumville, B (2001) "Team Mental Models in a Team Knowledge Framework: Expanding Theory and Measurement Across Disciplinary Boundaries" *Journal of Organizational Behavior* Volume 22, Issue 2, pp.89-106

Molopi, E and Mkhize, T (2013) "Shahida Kazie" in Benit-Gbaffou (ed) "Community Activists Tell Their Story: Driving Change in Johannesburg & Ekurhuleni" CUBES & NRF SARChI: Development Planning and Modelling, Wits University available from http://www.wits.ac.za/files/9oih7_780966001372335762.pdf.

Molutsi, P (2013) *Personal Interview*

Morris, A (2004) "A Decade of Post-Apartheid" *The Journal of South African and American Studies*, Vol. 5, No. 1-2, pp.1-13.

Napier, M (2013) "Land and markets in African cities: Time for a new lens?" in Napier, M et al (eds) *Trading Places: Accessing land in African cities*. African Minds: Somerset West.

Olivier de Sardan, J.P (2008) "Researching the Practical Norms of Real Governance in Africa" *Discussion Paper*, No.5 accessed from http://www.institutions-africa.org/filestream/20090109-discussion-paper-5-researching-the-practical-norms-of-real-governance-in-africa-jean-pierre-olivier-de-sardan-jan-2009 on 17 September 2014.

Olufemi, O (2004) "Socio-political imperatives of land invasion and eviction: Revisiting the Bredell case, Johannesburg, South Africa" *Conference Paper* Centre for Urban and Community Studies. Toronto.

Parnell, S and Beavon, K (1996) "Urban Land Restitution in Post-Apartheid South Africa: Questions from the Johannesburg Inner-City" *GeoJournal*, Vol. 39, No. 1, pp.13-19.

Payne, G (1999) *Making Common Ground: Public-Private Partnerships in Land for Housing* Intermediate Technology Publications: London.

Payne, G (2001) "Urban land tenure policy options: titles or rights?" *Habitat International*, Vol. 25, pp. 415-429.

Purcell, M (2001) "Neighborhood Activism among Homeowners as a Politics of Space" *The Professional Geographer*, Vol.53, No.2, pp.178-194.

Republic of South Africa (1996) *The Constitution of the Republic of South Africa,*1996.

Roy, A (2005) "Urban Informality: Toward an Epistemology of Planning" *Journal of the American Planning Association*, Vol, 71, No. 2, pp. 147-158.

Roy, A (2009) "Why India Cannot Plan Its Cities: Informality, Insurgence and the Idiom of urbanization" *Planning Theory* Vol. 8, No.76.

Rubin, M (2011) "Perceived Corruption in the South African Housing Allocation and Delivery Programme: What It May Mean for Accessing the State" J*ournal of Asian and African Studies,* Vol.46, No.5, pp.479-490.

Seekings, J and Nattrass, N (2011) "State-Business Relations and Pro-Poor Growth in South Africa" *Journal of International Development*, no.23, pp.338–357.

Seipobi, PM (2013) *Parliamentary Committee Meeting* [Audio Recording].

Sibiya, M (2014) *Personal Interview.*

Soja, E (1996) *Thirdspace: Journeys to Los Angeles and other real-and-imagined places.* Cambridge, MA: Blackwell.

South African History Online (date unavailable) "Indian Community in Lenasia" accessed from http://www.sahistory.org.za/indian-community-lenasia?page=4 on 18 March 2014.

Thorn, J and Oldfield, S (2011) "A Politics of Land Occupation: State Practice and Everyday Mobilization in Zille Raine Heights, Cape Town" *Journal of Asian and African Studies*, Vol. 46, No. 5, pp.518–530.

Tilly, C (1997) "Parliamentarization of popular contention in Great Britain, 1758-1834" *Theory and Society 26*, pp. 245-273.

Tilly, C (1998) "Where do Rights Come From?" in T Sckopol (ed.) *Democracy, Revolution and History*. Ithaca: Cornell University Press.

Tissington K, Munshi N, Mirugi-Mukundi G and Durojaye E (2013) "'Jumping the Queue', Waiting Lists and other Myths: Perceptions and Practice around Housing Demand and Allocation in South Africa" CLC and SERI.

Van Gelder, J (2009) "Legal tenure security, perceived tenure security and housing improvement in Buenos Aires: an attempt towards integration" *International Journal of Urban and Regional Research,* Vol. 33, No.1, pp. 126–46.

Van Gelder, J (2013) "Then I'll Huff, and I'll Puff, and I'll . . . : A Natural Experiment on Property Titling, Housing Improvement and the Psychology of Tenure Security" *International Journal of Urban and Regional Research,* Vol. 37, No.2, pp.734–749.

Van Wyk, J (2012) "Planning In All Its (Dis)guises: Spheres Of Government, Functional Areas And Authority" *PER,* vol. 15, no 5, pp. 287-318.

Varley, A. (2002) "Private or public: Debating the meaning of tenure legislation" *International Journal of Urban and Regional Research,* Vol. 26, No. 3, pp. 449–461.

Vaughan, L., Griggiths, S., Haklay, M and Jones, C (2009) "Do the Suburbs Exist? Discovering Complexity and Specificity in Suburban Built Form" *Transactions of the Institute of British Geographers*, Vol. 34, No. 4, pp.475–488.

Zuern, E (2004), "Continuity in Contradiction? The Prospects for a National Civic Movement in a Democratic State: SANCO and the ANC in Post-Apartheid South Africa" *Centre for Civil Society, Research report* no. 26.

Media Articles

City Press (2012) "Health MEC takes over from Mmemezi" accessed from http://www.citypress.co.za/news/health-mec-takes-over-from-mmemezi-20120716/ on 27 February 2014.

Cox, A (2012) "Legal residents want houses demolished" in *IOL News* accessed from http://www.iol.co.za/news/crime-courts/legal-residents-want-houses-demolished-1.1430800#.Uy72moX4KeZ on 18 March 2014.

Gauteng Government Online (2012) "The Gauteng Provincial Government's statement on the demolition of illegally-built houses in Lenasia South" accessed from http://www.gautengonline.gov.za/MediaStatements/Pages/TheGautengProvincialGovernmentsstatementonthedemolitionofillegally-builthousesinLenasiaSouth.aspx on 26 March 2014.

Jardine, F (2012) "Housing Department's demolition is illegal, dishonest" *The Star* accessed from http://www.iol.co.za/the-star/housing-department-s-demolition-is-illegal-dishonest-1.1423688#.UxW8mIWviGc on 03 March 2014.

Macupe, B and Bailey, C (2012) "Lenasia victims must be compensated" in IOL News accessed from http://www.iol.co.za/news/politics/lenasia-victims-must-be-compensated-1.1430024#.Uw3eTM55cms on 26 February 2014.

Mafisa, I (2012) "This land's not your land" New Age accessed from http://www.thenewage.co.za/mobi/Detail.aspx?NewsID=73039&CatID=1008 on 11 March 2014.

Mediaforjustice (2012a November, 13) "Lenasia resident speaks of Housing Scam" accessed from http://www.youtube.com/watch?v=BYcfGUVOVqI on 27 February 2014.

Mediaforjustice (2012b November, 17) "Lazarus Baloyi - Chair of Concerned Residents, Lenasia" accessed from http://www.youtube.com/watch?v=17568Jh96dM on 27 February 2014.

Moeng, K (2010) "Houses to Stay: Court Orders Department to Stop Demolition of Homes" in *Sowetan Live* accessed from http://www.sowetanlive.co.za/news/2010/09/14/houses-to-stay on 28 February 2014.

Mokone, T (2012) "Sexwale to Handle Lenasia Damage Control" in *Timeslive* accessed from http://www.timeslive.co.za/thetimes/2012/11/23/sexwale-to-handle-lenasia-damage-control on 16 May 2014.

SAHRC (2012a) "Lenasia: SAHRC engages with stakeholders supporting its court application" in *The South African Human Rights Commission* accessed from http://www.sahrc.org.za/home/index.php?ipkArticleID=151 on 26 February 2014.

SAHRC (2012b) "Lenasia: SAHRC dissapointed by the Department of Housing, calls for demolitions to stop pending court process" in *The South African Human Rights Commission* accessed from http://www.sahrc.org.za/home/index.php?ipkArticleID=153 on 26 February 2014.

SAHRC (2012c) "Lenasia: SAHRC welcomes and supports the intervention team announced by the Human Settlement Minister" in *The South African Human Rights*

Commission accessed from http://www.sahrc.org.za/home/index.php?ipkArticleID=157 on 26 February 2014.

SAHRC (2012d) "SAHRC concerned about Minister Sexwale statements and plan on Lenasia" in *The South African Human Rights Commission* accessed from http://www.sahrc.org.za/home/index.php?ipkArticleID=162 on 27 May 2014.

SAPA (2012) "Lenasia Inspections to start" in News24 accessed from m.news24.com/news24/SouthAfrica/News/Lenasia-inspections-to-start-20121204-3 accessed on 16 January 2013.

SAPA (2013) "Alleged land fraudsters in court" *IOL* accessed from http://www.iol.co.za/news/crime-courts/alleged-land-fraudsters-in-court-1.1497841#.UxXkmoWviGc on 03 March 2014.

The South African Broadcasting Commission (2012) "Sanco to form human shield to stop more Lenasia homes being destroyed" accessed from http://www.sabc.co.za/news/a/1231b0004d69de8e9938f9e570eb4ca2/Sanco-to-form-human-shield-to-stop-more-Lenasia-homes-being-destroyed--20121111 on 13 March 2013.