

https://dspace.org/

The networking of NC and CNC machines to facilitate the electronic transfer of CAD/CAM data

Hill, Mark Jeffrey

2015-01-27
http://hdl.handle.net/10539/16785

Downloaded from a DSpace repository. https://dspace.org/

useless by tearing, kinking or soiling them with water and oil typically found in a shop floor environment.

Cost of Paper Tape : The cost of paper, mylar and plasticised tape used amounts to approximately R40 000 per year.

Configuration Control : Updated tapes are sometimes confused with outdated tapes and are discarded. The outdated tape is stored and used as the updated version with obvious detrimental effects.

Reliability : The paper tape readers are delicate opto/mechanical systems which fail exponentially as the systems age, resulting in an increasing amount of NC machine downtime and loss of production.

Spares : Spares for the tape readers are often not available, especially for the older systems. Replacement cost of a paper tape reader is approximately R10 000.

Scrap : As the systems age they become less accurate which results in incorrect data being occasionally read into the NC machines. Workpieces are often scrapped, which can be a costly event if the current operation is one of the final operations on the workpiece. The cost of all the previous operations as well as the cost of the raw material can result in a high scrap cost.

The above problems provided the motivation to replace the medium of data transfer from the NC Programming department to the shop floor using paper tape to system of electronic data transfer.

3. REVIEW OF RELATED LITERATUR

3.1 Computer Integrated Manufacturing (CIM)

CIM is a concept that many authors have attempted to define and discuss. There is no one standard definition of CIM, nor is there any standard method of implementing it. One definition of CIM is the following :

"A truly integrated CIM system provides computer assistance to all business functions from marketing to product shipment. It embraces what historically have been classified as "business systems" applications including order entry, bill of material processing, inventory control, and material requirements planning; design automation including drafting, design and simulation; manufacturing planning, including process planning, routing and rating, tool design, and parts programming; and shop floor applications such as numerical control, assembly automation, testing, and process automation." (1)

From the above definition, it can be seen that CIM is an multi-faceted concept, and one that is far too "all encompassing" to be discussed in any detail in this document. Let us concentrate on the block marked "Shop Floor" in figure 3.1(1), and more specifically on Integrated Shop Floor Communications or Direct Numerical Control (DNC) as it was traditionally known.

3. REVIEW OF RELATED LITERATURE

3.1 Computer Integrated Manufacturing (CIM)

CIM is a concept that many authors have attempted to define and discuss. There is no one standard definition of CIM, nor is there any standard method of implementing it. One definition of CIM is the following :

"A truly integrated CIM system provides computer assistance to all business functions from marketing to product shipment. It embraces what historically have been classified as "business systems" applications including order entry, bill of material processing, inventory control, and material requirements planning; design automation including drafting, design and simulation; manufacturing planning, including process planning, routing and rating, tool design, and parts programming; and shop floor applications such as numerical control, assembly automation, testing, and process automation." (1)

From the above definition, it can be seen that CIM is an multi-faceted concept, and one that is far too "all encompassing" to be discussed in any detail in this document. Let us concentrate on the block marked "Shop Floor" in figure 3.1(1), and more specifically on Integrated Shop Floor Communications or Direct Numerical Control (DNC) as it was traditionally known.

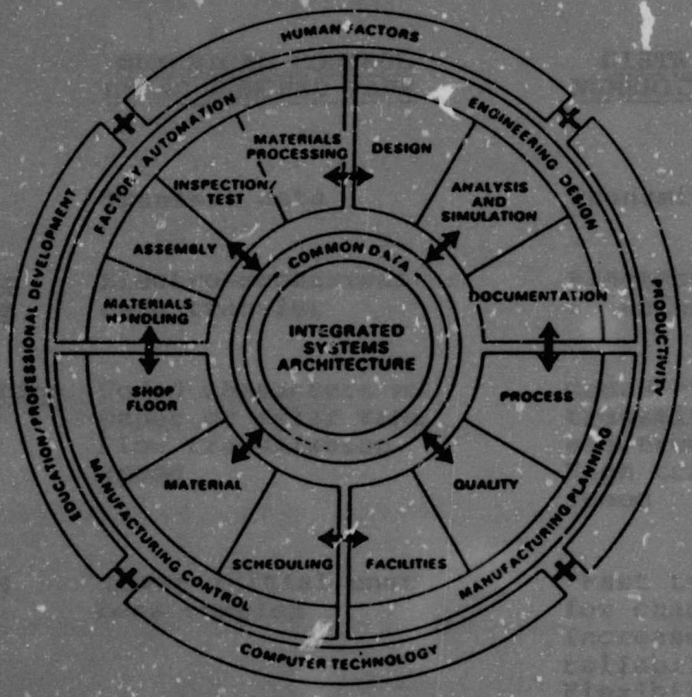

Fig 3.1 Computer Integrated Manufacturing

3.2 Integrated Shop Floor Communications

DNC is one of the underlying technologies of factory automation. It centers around the transmission of information between engineering and CAD/CAM systems and remote production machines on the shop floor. Figure 3.2 represents a comparison of DNC and the older technology of Numerical Control (NC) using punched paper tape. (2)

Watt(3), defines three architectures for achieving integrated shop floor communications, using the term "cell"

SYSTEM	NUMERICAL CONTROL USING PUNCHED TAPE	NC[illegible]TROL
Purpose	Transmit data	Transmit data
Underlying Technology	Electro-mechanical data transfer	Electronic data transfer
Communication Medium	Coded characters on paper or mylar tape Slow transmission speed	Coded characters transmitted by electronic pulse High transmission speed
Advantages	Lower initial cost Less complex	Fa[illegible]turnaround for [illegible]anges Increased reliability Flexibility Large file sizes for complex parts Provision for process feedback Improved part process control
Disadvantages	Aging technology Slow Some reliability problems No process feedback Part complexity limited by tape length and and number of tapes	More complex New procedures needed Higher capital cost Specialised equipment required Highly trained personnel required

Fig 3.2 Comparison of NC and DNC

to describe a machine shop with a collection of NC/CNC machines :

- Centralised Control System
- Networked Cell Control System
- Fully Distributed Cell Control System

3.2.1 Centralised Cell Control System

In this architecture, the control system is completely implemented on a single computer system, probably a general purpose minicomputer. This computer manages the database of NC programs and all the shop floor NC/CNC control functions. In addition, all the application and protocol conversion tasks required by the machines on the shop floor are performed by this central computer, see figure 3.3(3). For this architecture, the hardware communications required may be complex and diverse. A general-purpose

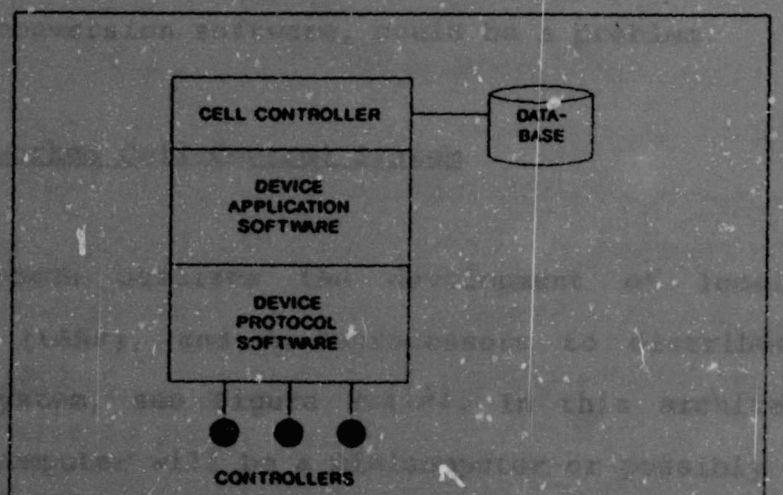

Fig 3.3 A Centralised Control System

computer is usually designed to accommodate serial lines and local area network (LAN) connections. Digital I/O and parallel I/O, which most of the older NC and CNC machines require, present a problem for which extra hardware may be required. In the factory, there is often electrical "noise", which makes the use of long RS-232 or digital I/O lines undesirable. Most minicomputers will not withstand a factory environment, so a special computer room may be required, increasing the length of the communication and adding to the cost.

The speed of a computer's response is dictated not only by the speed of the communication link, but also by the ability of the cell control computer to respond. Since all functions of the cell control system are carried out on a single computer, response may be unacceptably slow in some cases. Protocol software is particularly wasteful of the cell computer's processing power, and attempting to control many different NC/CNC machines, all requiring different protocol conversion software, could be a problem.

3.2.2 Networked Cell Control System

This approach utilizes the development of local area networks, (LANs), and microprocessors to distribute the control system, see figure 3.4[3]. In this architecture, the cell computer will be a minicomputer or possibly one or more microcomputers. The protocol section of the NC/CNC

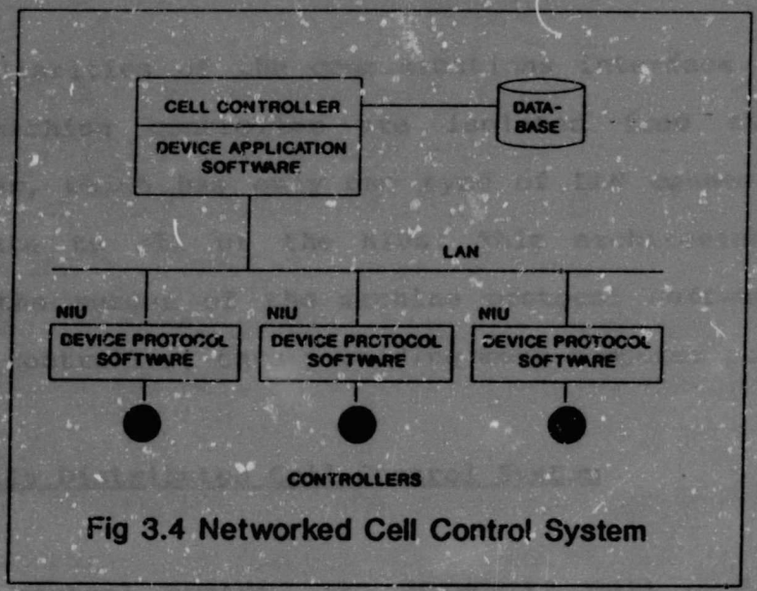

Fig 3.4 Networked Cell Control System

machine dependant software is contained in network interface units (NIUs), which connect to the network.

The cell controller is responsible for the cell control functions and the database management, as well as the NC/CNC machine application software. When an application wishes to control its associated NC/CNC machine, it sends a message over the lan to the protocol software in the NIU, which transmits it to the NC/CNC machine.

In this approach, the hardware communication connections are distributed among the NIUs. Each NIU can be placed near the machine or machines that it is to control. The data communication between the machine application software and the NIUs is via a LAN with high noise immunity and error-free transmission protocols.

The peculiarities of the communications interface of each NC/CNC machine controller are isolated from the cell controller, which has only one type of LAN connection to communicate to all of the NIUs. This architecture also removes the burden of the machine protocol software from the cell controller, thus providing more computer power.

3.2.3 Fully Distributed Cell Control System

In this control system, the "CIMCELL" cell controller, database, and NIUs are all directly connected to a LAN to provide a full distributed architecture, see figure 3.5(3).

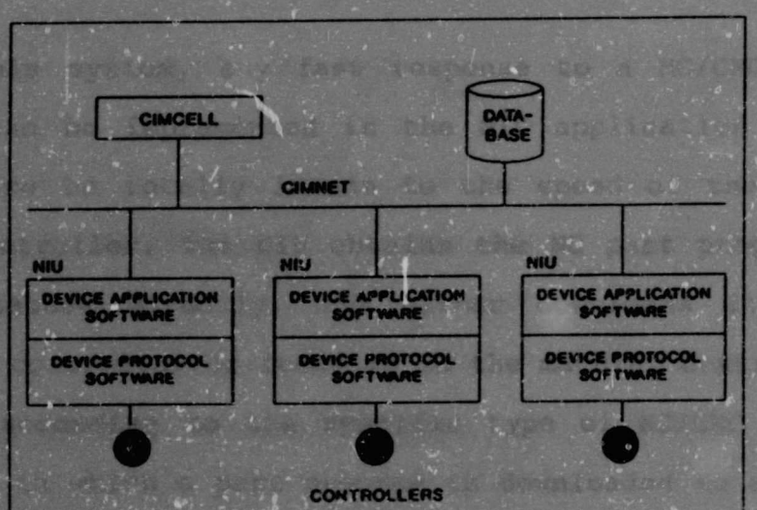

Fig 3.5 Fully Distributed Cell Control System

The cell controller is responsible for only those functions that control the cell as a whole. The application and protocol software that provides the intelligence to operate the machine is placed in the NIUs. In this way, the LAN is

no longer just a communication system to a group of machines, but is also a bus between the cell control software and the virtual machines it is operating. The advantage of a network addressable database is that the burden of obtaining the required part programs is offloaded from the cell control processor to the NIUs.

This architecture has all the advantages of the network approach and more. It removes the burden of the application software, as well as the protocol software, from the cell controller, which further reduces the processing demands from the cell controller.

With this system, any fast response to a NC/CNC machine event can be implemented in the NIU application software and hence be totally immune to the speed of the LAN and cell controller. The NIU obtains the NC part program from the database directly, and either downloads it to the machine controller or feeds it in the machine controller on demand according to the specific type of NC/CNC machine. The way in which a part program is downloaded to a NC/CNC, machine is totally transparent to the cell controller, thus facilitating the connection of many different types of NC/CNC machines.

3.3 Benefits and Limitations of Distributed Systems

Vrba[4], defines three architectures similar to those of

Watt[3]. They are :

- Host Type Architecture
- "Standard" Distributed Architecture
- "More Fully" Distributed Architecture

Vrba[4] describes the limitations of distributed systems as:

"Two potential difficulties exist within the application of distributed systems to CAM. The local area network is critical to proper operation, and there are many pieces of equipment to maintain."

Summarized, these difficulties are:

i) The key to a truly distributed system is a reliable and relatively high speed local area network. Any network is applicable for systems of this type if speed and reliability are adequate. It is important to note that total loss of network communications is equivalent to the loss of a host computer in a host type network. LAN's that incorporate fibre optic cabling are excellent in terms of data integrity due to their immunity to electrical "noise" that is common in factories.

ii) A distributed system has more "boxes" (NIU's) than does a host type system. This may imply increased

maintenance costs, but generally the opposite is true. Smaller processors are generally easier to maintain than larger computers. Furthermore, any node (NIU) on distributed system may be taken offline for maintenance without degrading system operation. Direct node (NIU) replacement in emergencies is also possible.

Vrba[4], also describes the benefits of distributed systems:

"Distributed CAM systems offer three advantages which are directly in keeping with the "additional" system requirements. These are reliability, responsiveness and flexibility."

Summarized, these benefits are :

i) Distributed systems offer better system availability. Should an actual failure occur, only a small area is affected. Because the critical operations of a distributed system reside in smaller processors, redundancy can be accomplished in a cost effective manner. This redundancy may also be used to enhance system throughput in the absence of a failure.

ii) Distributed systems can offer greatly improved responsiveness. No bottlenecks exist in the flow of

transfer of data to and from central databases is removed, exception processing throughput is greatly enhanced. In a properly designed distributed system, data travels only on an as-needed basis.

iii) Distributed systems offer much more flexibility than other architectures. The physical modularity of the distributed system dictates a functional modularity of the system as a whole. Modular systems are easier to develop and maintain. Such systems are generally easier to configure to the specific needs of a facility and can be altered more easily in the future should it be required.

3.4 Project Proposal According to Conclusions drawn from Literature Review

It is obvious from the above discussion that the "ideal" system to implement is a Fully Distributed Cell Control System. The implementation of such a system can be divided into two separate entities :

- The CIMCELL
- The Data Transfer System

3.4.1 The CIMCELL

This entity involves the development of software and its

Author Hill Mark Jeffrey
Name of thesis The networking of NC and CNC machines to facilitate the electronic transfer of CAD/CAM data. 1989

PUBLISHER:
University of the Witwatersrand, Johannesburg
©2013

LEGAL NOTICES:

Copyright Notice: All materials on the University of the Witwatersrand, Johannesburg Library website are protected by South African copyright law and may not be distributed, transmitted, displayed, or otherwise published in any format, without the prior written permission of the copyright owner.

Disclaimer and Terms of Use: Provided that you maintain all copyright and other notices contained therein, you may download material (one machine readable copy and one print copy per page) for your personal and/or educational non-commercial use only.

The University of the Witwatersrand, Johannesburg, is not responsible for any errors or omissions and excludes any and all liability for any errors in or omissions from the information on the Library website.