

https://dspace.org/

Induced exchange of fluids in the treatment of post-traumatic infective lesions

Retief, D. J.; Dreyer, C. J.; Retief, D. H.; et al

1968

http://hdl.handle.net/10539/19453

Retief, D.J., Dreyer, C.J., Retief, D.H., et al.1968. Induced exchange of fluids in the treatment of post-traumatic infective lesions. South African medical journal; 42(4):79-83

Downloaded from a DSpace repository. https://dspace.org/

larly desirable in the elderly and debilitated patient. On the other hand, for longer procedures, especially when it is envisaged that halothane will be required as an adjuvant, the cerebrocortical stimulating effect of methohexitone reduces the tendency to lowered blood pressure, and the slow recovery enables longer procedures to be accomplished without the addition of an adjuvant.

REFERENCES

1. Lundy, J. S. (1935): Proc. Mayo Clin., 10, 536.
2. Jarman, R. and Abel, L. (1933): Lancet, 2, 18.
3. Goldman, V. (1933): Dent. Mag. (Lond.), 50, 1153.
4. Stoelting, V. K. (1957): Anesth. Analg. Curr. Res., 36, 49.
5. Green, R. and Jolly, C. (1960): Brit. J. Anaesth., 23, 593.
6. Goldman, V. and Harris, P. (1963): Brit. Dent. J., 114, 62.
7. Galley, A. H. (1963): Proc. Roy. Soc. Med., 56, 377.
8. Goldman, V. and Kennedy, P. (1964): Anaesthesia, 19, 424.
9. Wollson, R. (1967): Paper presented at the IVth Conference on Dental Anaesthesia, London.
10. Ministry of Health (1967): *Dental Anaesthesia*. London: Her Majesty's Stationery Office.
11. Clarke, R. S. J., Dundee, J. W. and Daw, R. H. (1964): Brit. J. Anaesth., 36, 307.
12. Johnstone, M. (1967): Unpublished data.

INDUCED EXCHANGE OF FLUIDS IN THE TREATMENT OF POST-TRAUMATIC INFECTIVE LESIONS—A PRELIMINARY REPORT

D. J. RETIEF, M.B., B.Ch. (RAND), F.R.C.S. (ENG.); C. J. DREYER, B.Sc. (S.A.), B.D.S., H.Dip.Dent. (RAND); D. H. RETIEF, M.Sc. (STELL.), B.D.S. (RAND); AND J. LEMMER, B.D.S., H.Dip.Dent. (RAND); *Joint Council for Scientific and Industrial Research and University of the Witwatersrand Dental Research Unit, Johannesburg*

The purpose of this report is to describe a method of treating certain infected wounds by artificially increasing the local fluid exchange.

CHRONIC OSTEOMYELITIS

The treatment of chronic osteomyelitis resulting from pyogenic infection of a compound fracture is difficult in spite of the use of antibiotics. The reason for this is to be found in the fact that the sequelae of inflammation are modified by the intra-osseous environment, since bone is a rigid structure.

The vascular dilation and associated oedema resulting from inflammation within a bone produce interstitial pressure considerably in excess of that which would occur in an inflamed soft tissue, where swelling could more readily dissipate the pressure.

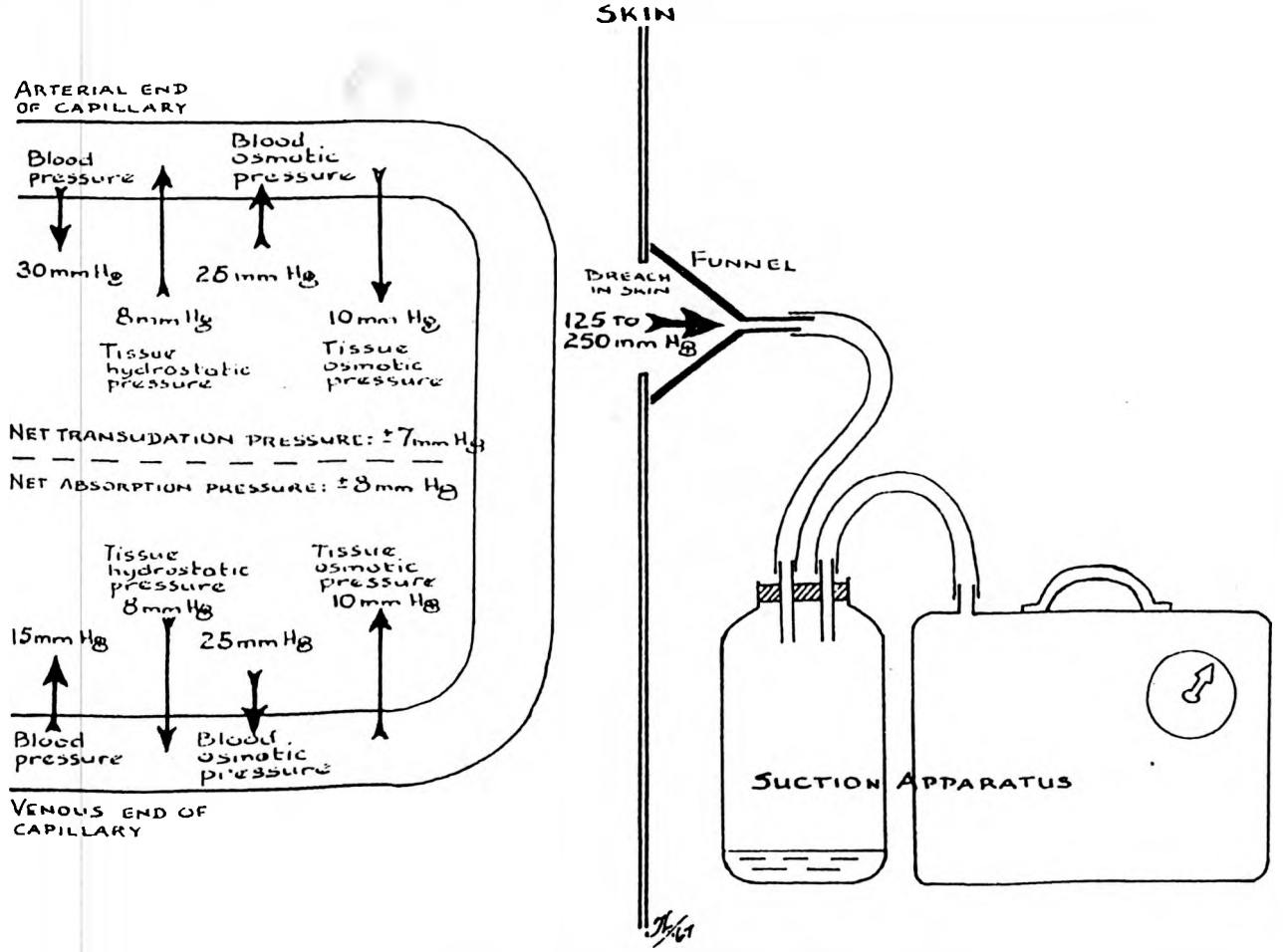

Fig. 1. The effect of suction on capillary filtration and reabsorption.

This unusual pressure, together with infection, leads to early thrombosis of endosteal vessels and loss of vitality of bone. The dead bone eventually becomes surrounded by granulation tissue and pus-containing cavities, and sequestra may form. Sinuses are frequently present, which continuously or intermittently discharge pus.

The tissue debris and bacteria blocking the canaliculi of the unsequestrated and sequestrated dead bone, play an important part in maintaining the infection.

At present the treatment of chronic osteomyelitis is based upon immobilization, control of infection with chemotherapeutic agents, adequate open drainage, and removal of infected bone and inflamed granulation tissue.

Were the means available, it would be of value to be able to supplement these measures by improving the immune response with specific immune sera, raising the concentration of antibiotic at the site of the lesion for a sufficiently long time, and inducing improved drainage.

The treatment method to be described is primarily designed to improve drainage and enhance transudation through the infected area by eliminating stagnant fluids in bone; in addition it also allows unhindered access of circulating antibodies and antibiotics to the infected site.

RATIONALE AND METHOD

According to Starling's hypothesis, tissue fluid exchange is governed by hydrostatic and osmotic pressures (Fig. 1). The vasodilatation of inflammation disturbs the natural balance of these pressures, favouring the flow of fluid into the interstitial compartment and out through any break in the surface. The raised osmotic pressure due to the breakdown products in a wound tends to enhance this outward flow; this is the mechanism of natural drainage of septic lesions.

Any method of artificially inducing increased drainage from an osteomyelitic cavity can only benefit the patient by hastening the elimination of pus and debris, particularly from the otherwise inaccessible canaliculi of the dead bone, and by increasing the inflow of circulating antibacterial agents. Induced drainage can be achieved by subjecting the affected tissue to negative pressure by covering it with a well-fitting cup connected to a suction pump.

The size of the sinus and the state of the surrounding tissues determine the size of the cup, which should be fitted so that its edge lies as much as possible on healthy skin. A suitable cup can be made from a plastic funnel which is easily trimmed to give a close fit to the skin, is cheap and can be sterilized. The stem of the funnel is connected to the suction pump by a length of stout rubber tubing (Fig. 1).

In the clinical trials carried out by two of the authors (C.J.D. and D.J.R.) suction treatments were done at weekly intervals because some concern was felt that the soft tissues might break down under too frequent suction applications. Weekly treatments were also convenient for outpatients.

Each treatment lasted for 10 minutes. In some cases a negative pressure of −250 mm.Hg was maintained for the full period; in other cases this negative pressure was applied for 2 min., and then raised to −125 mm.Hg for the remaining 8 min. At the end of the 10-minute period the pressure was gradually raised to atmospheric pressure. This treatment produced a flow of fluid, often blood-stained, from the tissues into the osteomyelitic cavity. There was no frank haemorrhage from the granulation tissue that was present in some cavities; indeed, at the end of the treatment the exposed granulation tissue was covered with a good blood-clot.

Contrary to expectation, the skin under the cup showed no changes beyond oedema and occasional petechiae.

ILLUSTRATIVE CASE REPORTS

Case 1

An adult male sustained a compound fracture of tibia and fibula, which was treated by surgical debridement and immobilization in plaster of paris (Fig. 2). Seven weeks later the bone was found to be protruding through the skin. An open reduction was performed and the limb once



Fig. 2. Anteroposterior view of tibia and fibula after initial treatment.

again immobilized in plaster of paris (Fig. 3). The open wound was packed with Vaseline-gauze, and antibiotic treatment was started.

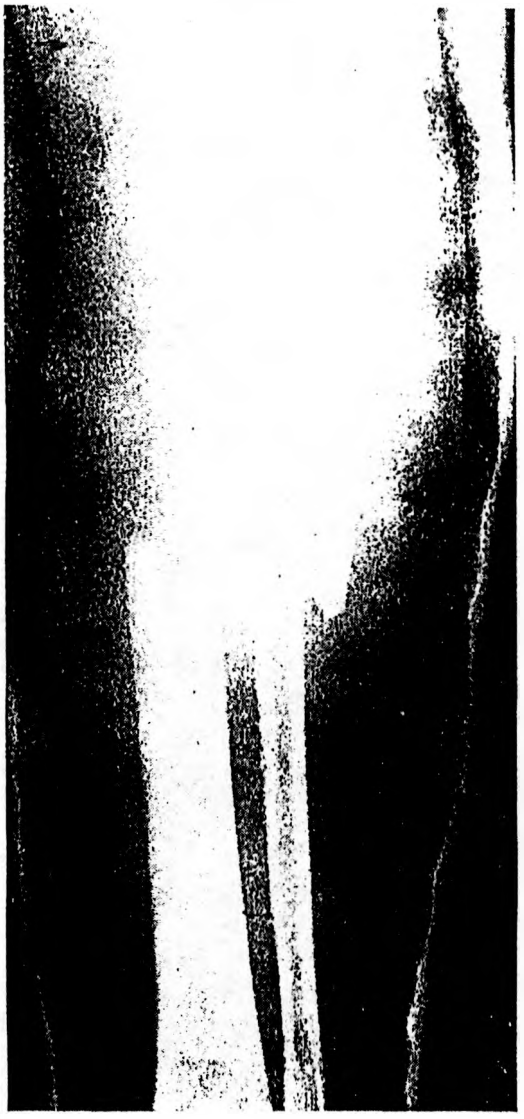

Fig. 3. Anteroposterior view of the same patient as shown in Fig. 2 after open reduction. Sepsis persisted.

Six weeks later there was no sign of improvement of the osteomyelitis and there was a discharging sinus. Antibiotic treatment was stopped at this time and suction treatment instituted at weekly intervals. After 5 months there was no evidence of sepsis, and when the plaster was removed the bone fragments were found to be well united (Fig. 4).

As a further means of encouraging fluid transudation and drainage, the osmotic pressure of the cavity may be increased by packing a pectin gel into the defect.

The gel is a compound of high molecular weight, which when in contact with moist tissue gradually alters to a sol and then becomes hydrolysed into soluble smaller molecular weight products. It is assumed that the resulting increase in osmotic pressure aids the flow of fluid from the surrounding tissues.



Fig. 4. Anteroposterior view of the leg of the same patient as shown in Figs. 2 and 3, after five months of treatment.

The pectin gel may also be used as a vehicle for local antibiotic application; and it is possible that the effective concentration of antibiotic introduced in this way is maintained for a longer time than if the topical antibiotic is used in liquid or powder form.

Case 2

An adult male was admitted to hospital with a compound fracture of the right tibia and fibula, and avulsion of the infrapatellar ligament. The limb was immobilized in plaster of paris and the infrapatellar ligament was repaired.

Three months later a sliding bone graft and plating of the tibia were carried out and the limb was re-immobilized. Three months later, because a discharging sinus had developed, the plate and screws were removed without disturbing the bone graft. The wound was packed and shortly thereafter the patient was discharged from hospital, but returned once a week for dressings which were done through a window in the plaster.

When the plaster was removed after 3 months, although satisfactory clinical union of the fragments had occurred, there was sepsis and a discharging sinus.

Pathological refracture of the tibia occurred 3 months after removal of the plaster cast, by which time the sinus had become a cavity some 3 in. by $\frac{1}{2}$ in. in size, with non-vital bony walls (Figs. 5 and 6).

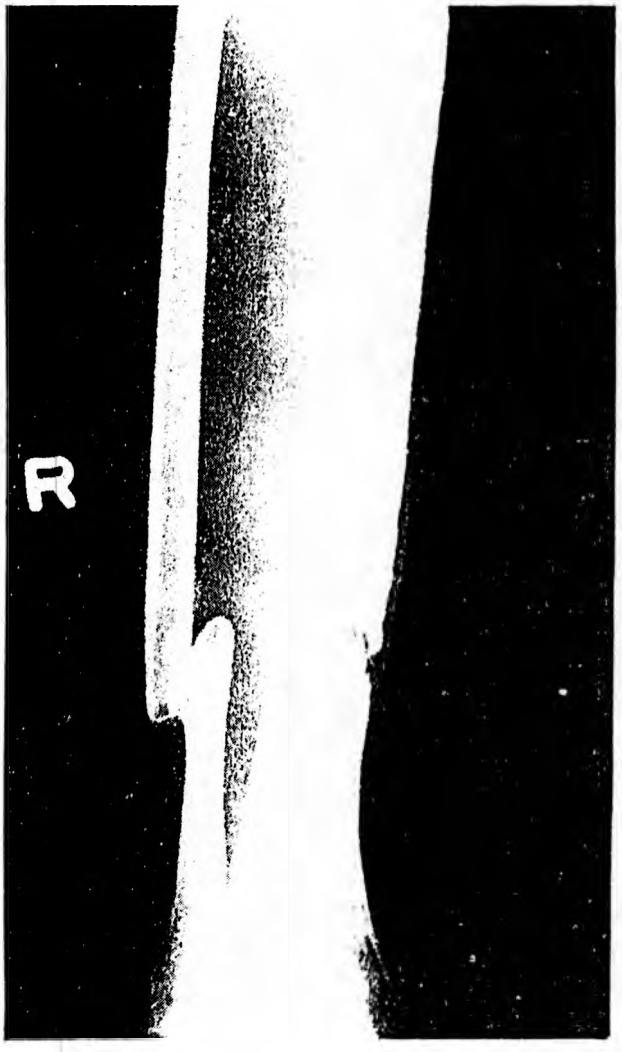

Fig. 5. Anteroposterior view of tibia and fibula, showing a pathological fracture of the tibia.

Weekly treatments by suction were started, and the cavity was dressed periodically with pectin gel incorporating an antibiotic (Lincocin). No systemic antibiotic was used, and the limb was not re-immobilized.

Three weeks later the patient stated that the leg was much more comfortable; regional lymphadenitis was no longer present. Within 6 months the entire cavity, except

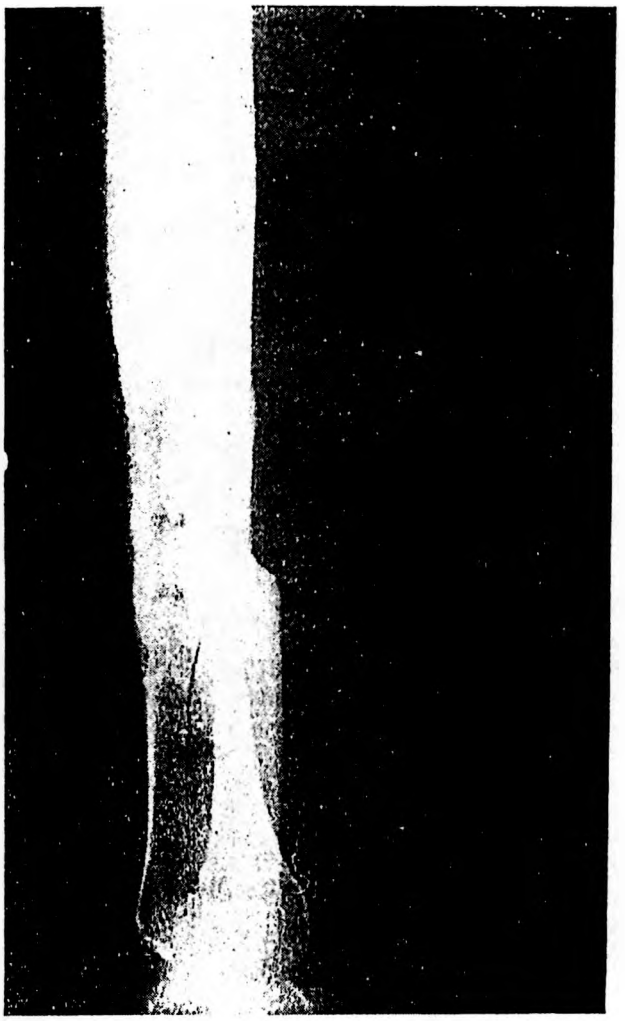

Fig. 6. Lateral view of the same leg as shown in Fig. 5.

for a small portion of its base, was lined with epithelialized granulation tissue, and clinical union had taken place to the extent that the patient was allowed limited use of the limb (Fig. 7).

In both cases described above, systemic antibiotics were discontinued when the suction treatment was started.

In the 2 cases described and in others treated similarly, it was striking that the granulation tissue became epithelialized from the edges of the wound much more rapidly than was expected.

Septic Arthritis—Case 3

One case of septic arthritis was also treated by suction in a manner similar to that described above; the treatment was not supplemented by pectin gel packing.

An adult male was admitted to hospital with septic

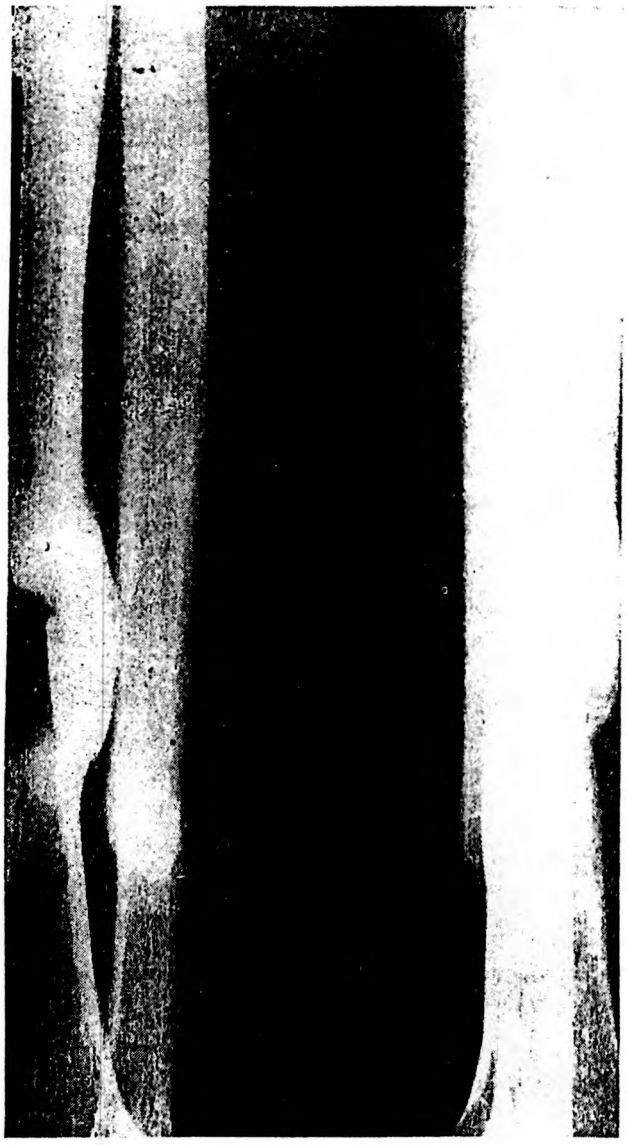

Fig. 7. Anteroposterior and lateral view of the leg of the same patient as shown in Figs. 5 and 6, six months after treatment. Note substantial callus.

arthritis of the right elbow joint and a compound fracture, including complete fracture of the olecranon process, the result of an axe wound.

The arm was immobilized in a plaster cast, with a window over the olecranon. Culture and sensitivity tests were done on pus from the wound, and antibiotic treatment started as soon as the test results were known. After a fortnight there was little improvement, and *daily* suction treatments were started, antibiotics being continued.

The patient reported remission of acute symptoms after the first suction treatment, and 7 days later the skin wound was completely healed.

Infective Tenosynovitis—Case 4

One of the factors which may be responsible for the difficulties experienced in treating septic tenosynovitis is inadequate drainage. For this reason suction therapy was used in the following case.

An adult male suffered a petrol burn and a week later was admitted to hospital with severely septic third-degree burns of both legs. The skin of both legs and feet was badly damaged, and bone and extensor tendons were exposed. The left leg was successfully treated with a Tiersch graft.

The right leg in particular had a deep burn about 4 in. above the ankle, through which a circular area of the tibial surface, about 1 in. in diameter, was exposed. The tibialis anterior tendon was completely charred.

The wounds were dressed with eusol.

Five weeks later there was an extensive septic tenosynovitis of the right tibialis anterior tendon, and weekly suction treatments were started at this time. By the time 8 weekly suction treatments had been done, the wound of the right leg had completely healed and the tibialis anterior tendon was functional.

SUMMARY AND CONCLUSIONS

A method is described of treating certain post-traumatic infective lesions by reducing periodically the hydrostatic pressure over the wounds. This increases the transudation of fluid from the infected tissue, and enhances the natural protective mechanisms of inflammation. In addition it greatly improves the gross drainage from the wound.

In the 4 cases described and in 5 other cases of chronic osteomyelitis treated similarly, the results were most encouraging, and warrant further clinical trials.

THE EFFECT OF CHRONIC ALCOHOLISM ON KETOSTEROID AND HYDROXYCORTICOID EXCRETION

B. KRENGEL, B.Sc., M.B., B.Ch., D.C.H., F.C.P. (S.A.), *Johannesburg*

Alcoholics are said to have diminished adrenal cortical activity and this is characterized by a diminished hydroxycorticoid excretion as well as a diminished ketosteroid excretion. They also show a diminished response to ACTH stimulation.

CASE REPORT

Mrs. A.B., a 67-year-old female, was admitted on 25 August 1966 complaining of acute back pain in the lower thoracic and lumbar area. Since the onset of pain which had lasted one day, the patient was unable to walk. She had consumed 2 brandies, plus several glasses of wine per day.

Physical examination showed a pale hirsute female with a moon-shaped face. She had several spider naevi of the face. The maximum cardiac impulse was ½ in. outside the mid-clavicular line. She had a grade II systolic murmur at