

https://dspace.org/

Evaluation of fourth generation air-interfaces for mobile communications

Van den Bergh, Ryan Michael

2008-05-29T13:35:37Z
http://hdl.handle.net/10539/4903

Downloaded from a DSpace repository. https://dspace.org/

Evaluation of Fourth Generation Air-Interfaces for Mobile Communications

Ryan van den Bergh

A thesis submitted to the Faculty of Engineering, University of the Witwatersrand, Johannesburg, in partial fulfilment of the requirements for the degree of Master of Science in Engineering.

Johannesburg, February 2007

Declaration

I declare that this research report is my own, unaided work, except where otherwise acknowledged. It is being submitted for the degree of Master of Science in Engineering in the University of the Witwatersrand, Johannesburg. It has not been submitted before for any degree or examination in any other university.

Signed this ___ day of _____ 20___

_____

Ryan van den Bergh.

Abstract

Development of the Fourth Generation of mobile communication systems, or 4G, has already begun in various organizations and research institutions worldwide. There is currently no single conclusive definition for 4G systems, and the process of 4G standardization will only begin after the World Radiocommunication Conference in 2007. The purpose of this report is to provide an objective definition of 4G systems based on user requirements, and to use this definition to determine an appropriate 4G access network architecture.

By examining the current trends in user requirements, and the methodologies proposed by different researchers, an objective definition of 4G systems was developed. The definition states that the purpose of 4G systems is to provide users with the capacity to access any service at any time at a reasonable cost and at the required levels of quality. There are two developmental methodologies which are currently being considered to achieve this objective: first the evolution and convergence of existing systems, including cellular, IT and broadcasting communication systems, and second, the development of a new 4G access network capable of providing users with access to advanced services. The primary specification for this new access network is that it must provide a throughput of 1 Mbps for mobile users and 1 Gbps for users that are stationary. Other requirements include high spectral efficiency and high capacity and coverage.

The primary focus of this report is the examination of the second of the above methodologies by evaluating the performance of candidate 4G air-interface architectures so that a recommendation could be made as to which of the architectures is the preferred choice as the core component in a new 4G access network. Orthogonal Frequency Division Multiplexing (OFDM) modulation is a high performance modulation technique capable of achieving high levels of spectral efficiency and is widely accepted as the technique most capable of meeting 4G access network requirements. There are two primary access network architectures that make use of OFDM modulation and could form the core components of a 4G air-interface, the physical component of a 4G access network. To determine which architecture is the appropriate choice for 4G systems, a series of simulations were run using realistic models of a wireless environment. The results of those simulations were analyzed, and it was determined that, due to the absence of multiple access interference found in MC-CDMA,

OFDMA systems better met the defined requirements for a 4G air-interface. The use of additional techniques such as radio resource management, multi-antennae technologies and software defined radios are cited as potential methods for improving both OFDMA and MC-CDMA performance.

Acknowledgements

The following research was performed under the auspices of the Center for Telecommunications Access and Services (CeTAS) at the University of the Witwatersrand, Johannesburg, South Africa. This center is funded by Telkom SA Limited, Siemens Telecommunications, the Department of Trade and Industry's THRIP programme and Vodacom SA. This financial support was much appreciated.

I would like to thank my supervisor, Prof. Hu Hanrahan, for his continued support, guidance and patience throughout the duration of this research. I would also like to thank the members of staff and my colleagues at CeTaS for their support and advice. Finally, I would like to thank my parents and sister for their love and support during this challenging period.

Contents

Declaration i

Abstract ii

Acknowledgements iv

Contents v

List of Figures ix

List of Tables xii

List of Abbreviations xiii

1 Introduction 1

1.1 The Evolution of Wireless Communications 2

1.1.1 Evolution of Cellular Mobile Systems 2

1.1.2 Evolution of Wireless Internet based Systems 4

1.2 Visions of a Mobile Future 5

1.3 Problem Statement 6

1.4 Guide to the Report 7

2 What is 4G? 9

2.1 A user-orientated specification for 4G systems 10

2.2 Developmental methodologies for 4G Systems 14

2.2.1 Evolution of Current Mobile Communication Systems 15

2.2.2 A Revolutionary New Access Network 17

2.3 An Objective Definition of 4G Systems 18

3 Orthogonal Multicarrier Systems 20

3.1 Orthogonal Frequency Division Multiplexing 21

3.1.1 Basics of OFDM 21

3.1.2 The Discrete Fourier Transform in OFDM Systems 23

3.1.3 Insertion of the Guard Interval 24

3.1.4 Performance of OFDM Systems 26

3.1.5 Advantages and Disadvantages of OFDM Modulation 31

3.2 OFDM in Spread Spectrum Systems 31

3.2.1 Direct Sequence Spread Spectrum 32

3.2.2 OFDM and Spread Spectrum 34

3.2.3 Performance of OFDM-SS Modulation 35

3.2.4 Advantages and Disadvantages of OFDM-SS Modulation 36

4 Candidate 4G Air-Interface Architectures 38

4.1 OFDMA 39

4.2 MC-CDMA 40

4.3 A Generic 4G Air-Interface Architecture 43

4.3.1 Channel Coding 44
4.3.2 Interleaving 45
4.3.3 Constellation Mapping 45
4.3.4 Virtual Subcarriers 47
4.3.5 Synchronization 47
4.3.6 Channel Estimation and Equalization 49
4.4 OFDMA and MC-CDMA as Candidate 4G Air-Interfaces 52

5 Simulation of Candidate Air-Interfaces 53

5.1 Evaluating the Performance of Candidate 4G Air-Interfaces 53
5.2 Assumptions 54
5.3 Radio Propagation 55
5.3.1 Noise 56
5.3.2 Multipath Fading Channels 56
5.3.3 Path Loss 56
5.3.4 Shadowing 57
5.4 Comparison of OFDMA and MC-CDMA systems in a realistic wireless channel 57
5.5 Comparison of OFDMA and MC-CDMA Systems in a cellular environment 60

6 Determining the Most Appropriate 4G Air-Interface Architecture 65

6.1 Analysis of OFDMA and MC-CDMA Systems in a realistic wireless channel 65
6.2 Analysis of OFDMA and MC-CDMA Systems in a cellular environment . . 69
6.3 The Most Appropriate 4G Air-Interface Architecture 71

7 Conclusion **75**

7.1 Summary of Report Material 75

7.2 Analysis of Solution 76

7.3 Complementary Technologies for Improving 4G Air-Interface Performance 77

7.3.1 Radio Resource Management 77

7.3.2 Multi-Antennae Technologies 78

7.3.3 Software Defined Radio 79

References **81**

A Contents of the Compact Disk **83**

List of Figures

1.1 A timeline showing the evolution of mobile cellular and wireless Internet access communications systems 2

2.1 The differences in the development of communication systems when using the benchmark services methodology or the user-orientated services methodology 11

2.2 Current user service trends which form the requirements for the user-orientated development of 4G systems 13

2.3 Converged 4G Network Architecture 15

2.4 The integration of the evolution and convergence and the revolution developmental methodologies, based on the 'VAN' diagram from the ITU in [1] . 16

3.1 Orthogonal Frequency Division Multiplexing Modulation 21

3.2 Comparison between the subcarrier construction in OFDM and FDM 22

3.3 OFDM Modulation by means of the Fast Fourier Transform 23

3.4 Construction of the OFDM Guard Interval 24

3.5 Comparison between the Multicarrier and Singlecarrier Modulation in Frequency Selective Channels (constructed from material in [2]) 27

3.6 The effect of Doppler spread on the sampling of a received OFDM signal . 29

3.7 The use of IQ Modulation in an OFDM System 31

3.8 The effect of spreading codes on a narrow band signal 32

3.9 OFDM-SS Modulation as used in MC-CDMA systems 34

4.1 The architecture of an OFDMA transmitter and receiver for a base station . 39

4.2 The architecture of an OFDMA transmitter and receiver for a mobile terminal 40

4.3 The architecture of an MC-CDMA transmitter and receiver for a base station 41

4.4 The architecture of an MC-CDMA transmitter and receiver for a mobile terminal 42

4.5 M-Modification in an MC-CDMA Base Station 42

4.6 A Generic 4G Air-Interface Architecture 43

4.7 Convolutional Encoder with a 4-Stage Shift Register, 2 Linear Algebraic Function Generators, 1 Input Bit and 1 Output Bit 44

4.8 A Constellation Map showing 16-QAM digital modulation symbols and how these are mapped to sine and cosine signals. 46

4.9 Effect of AWGN on different cardinalities of QAM 47

4.10 An OFDM Frame containing null and reference symbols. The reference symbol makes use of 4 synchronization patterns (SP). 48

5.1 Architecture of the simulation to compare OFDMA and MC-CDMA systems in a realistic wireless channel 57

5.2 Illustration of the method used to construct an OFDM Frame for use in the simulations. 58

5.3 The cellular environment used to conduct simulations to compare OFDMA and MC-CDMA 61

5.4 Architecture of the simulation to compare OFDMA and MC-CDMA systems in a cellular environment, based on material found in [3, 4] 62

6.1 Performance comparison of OFDMA and MC-CDMA systems in a realistic wireless environment, with 1 user, a code length of 8 and using 16-QAM and 64-QAM 66

6.2 Performance comparison of OFDMA and MC-CDMA systems in a realistic wireless environment, with 1 user, a code length of 32 using 64-QAM . . . 69

6.3 Performance comparison of OFDMA and MC-CDMA systems in a realistic wireless environment, with 8 users, a code length of 32 using 64-QAM . . . 70

6.4 Performance comparison of OFDMA and MC-CDMA systems in a cellular environment, with 1 user, a code length of 8 using 64-QAM, where the mobile terminal is positioned close to the primary base station 71

6.5 Performance comparison of OFDMA and MC-CDMA systems in a cellular environment, with 1 user, a code length of 8 using 64-QAM, where the mobile terminal is positioned at the edge of the primary cell 72

6.6 Performance comparison of OFDMA and MC-CDMA systems in a cellular environment, with 8 users, a code length of 8 using 64-QAM, where the mobile terminal is positioned at the edge of the primary cell 73

A.1 Directory structure of attached CD 83

List of Tables

1.1 Summary of cellular mobile systems' characteristics 4

1.2 Summary of wireless Internet access systems' characteristics 5

3.1 The advantages and disadvantages of OFDM as a modulation scheme . . . 32

3.2 The advantages and disadvantages of OFDM-SS as a modulation scheme . 37

5.1 Static parameters for the simulation comparing OFDMA and MC-CDMA performance in a realistic wireless channel 59

5.2 Dynamic parameters for the simulation comparing OFDMA and MC-CDMA performance in a realistic wireless channel 60

5.3 Static parameters for the simulation comparing OFDMA and MC-CDMA performance in a cellular environment 63

5.4 Dynamic parameters for the simulation comparing OFDMA and MC-CDMA performance in a cellular environment 63

6.1 Performance measurements of OFDMA and MC-CDMA systems in a realistic wireless environment, with 1 user and a code length of 8 67

6.2 Performance measurements of OFDMA and MC-CDMA systems in a realistic wireless environment, with 1 user and a variable code length 68

List of Abbreviations

1G - First Generation of Cellular Mobile Communication Systems (e.g. AMPS, NTT)

2G - Second Generation of Cellular Mobile Communication Systems (e.g. GSM, IS-95)

2.5G - Packet-switched overlay on 2G Systems (e.g. GPRS, EDGE)

3G - Third Generation of Cellular Mobile Communication Systems (e.g. W-CDMA, CDMA2000)

4G - Fourth Generation of Cellular Mobile Communication Systems

ADC - Analog to Digital Converter

ADSL - Asynchronous Digital Subscriber Line

AMPS - Advanced Mobile Phone System

AWGN - Additive White Gaussian Noise

BER - Bit Error Ratio

CDMA - Code Division Multiple Access

DAC - Digital to Analog Converter

DFT - Discrete Fourier Transform

DSP - Digital Signal Processor

DSSS - Direct Sequence Spread Spectrum

EDGE - Enhanced Data Rates for GSM

EGC - Equal Gain Combining Equalization

FDM - Frequency Division Multiplexing Modulation

FDMA - Frequency Division Multiple Access

FEC - Forward Error Correction Coding

FFT - Fast Fourier Transform

GPRS - General Packet Radio Service

GSM - Global System for Mobile Communications

HALO - Hardware in the Loop

HSDPA - High-Speed Downlink Packet Access

HSUPA - High-Speed Uplink Packet Access

ICI - Interchannel Interference

IOFDM - Inverse Orthogonal Frequency Division Multiplexing Modulation

IMS - IP Multimedia Subsystem

IMT-2000 - International Mobile Telecommunications 2000

IP - Internet Protocol

ISI - Intersymbol Interference

ITU - International Telecommunications Union

LAN - Local Area Network

MAI - Multiple Access Interference

MAN - Metropolitan Area Network

MC-CDMA - Multicarrier Code Division Multiple Access

MC-SS - Multicarrier Spread Spectrum

MIMO - Multiple Input Multiple Output

MISO - Multiple Input Single Output

MUD - Multi User Detection

NMT - Nordic Mobile Telephone System

OFDM - Orthogonal Frequency Division Multiplexing Modulation

OFDMA - Orthogonal Frequency Division Multiple Access

ORC - Orthogonality Restoring Combining Equalization

OVSF - Orthogonal Variable Spreading Factor

PAN - Personal Area Network

PAPR - Peak-to-Average Power Ratio

PDC - Personal Digital Cellular System

PSK - Phase Shift Keying

QAM - Quadrature Amplitude Modulation

QoS - Quality of Service

RRM - Radio Resource Management

SDMA - Spatial Division Multiple Access

SDR - Software Defined Radio

SIMO - Single Input Multiple Output

SISO - Single Input Single Output

SNR - Signal to Noise Ratio

SUD - Single User Detection

TDMA - Time Division Multiple Access

UMTS - Universal Mobile Telephone Service

WRC - World Radiocommunication Conference

ZF - Zero Forcing Equalization

Chapter 1

Introduction

Twenty five years ago access to mobile telecommunications systems was limited to a privileged few. Those systems were unreliable, cumbersome and provided their users with a poor quality of service. Today almost one third of the World's population owns a mobile communication device, and this number is steadily increasing [5].

Telecommunications users have become accustomed to always being able to communicate with one another, regardless of their location. This has resulted in consumers expecting ever increasing levels of quality of service (QoS) together with access to new and advanced multimedia and data services.

The recent growing deployment of Third Generation (3G) mobile communications systems has resulted in mixed reactions from mobile operators and users. In some countries, such as Japan, 3G services have been a resounding success, while in other countries, primarily in Europe, mobile operators continue to struggle to make returns on their 3G capital investment [6].

It is in response to these developments that researchers have begun to focus their attention towards a new generation of mobile communications services known as the Fourth Generation, or simply 4G. Currently there is a global debate surrounding the definition of 4G, as various researchers attempt to ensure that their interpretation becomes central to the standardization of 4G systems. The consequence of this is that there is currently no single conclusive definition of 4G.

In order to completely understand the current state of mobile communications technology, and from that to predict its future, it is necessary to examine the evolution of these systems over the past twenty five years.

1.1 The Evolution of Wireless Communications

Traditionally the world of wireless communications systems has been divided into two sections; the first contains those systems based on cellular telephony and the second consists of those systems that provide wireless Internet access [6]. Recently mobile operators have begun to attempt to converge the two categories of systems in an effort to satisfy users' ever increasing demands for high quality multimedia and data services. This convergence of existing access network systems is cited as one potential evolutionary path towards the development of 4G [5, 6].

To completely understand the concept of wireless convergence, it is necessary to discuss the history of both cellular and wireless Internet based communications systems. The following two subsections will examine the evolution of these communications systems, and Figure 1.1 illustrates the developmental timeline.

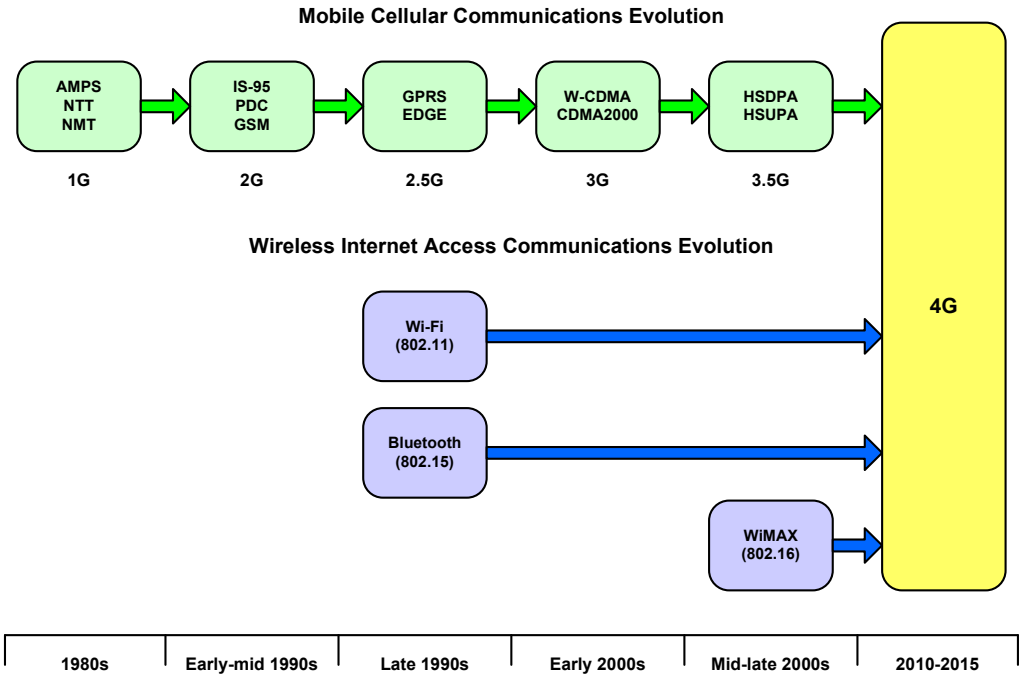

Figure 1.1: A timeline showing the evolution of mobile cellular and wireless Internet access communications systems

1.1.1 Evolution of Cellular Mobile Systems

Cellular mobile communications systems have to date evolved through three distinct generations of technology. Each generation has been marked by a significant increase in both

the quality and the complexity of the services offered to users. The First Generation (1G) was launched during the 1980s and provided users with basic mobile telephony services. The systems were all based on analogue modulation and offered a low quality of service. Examples of such systems are the Nordic Mobile Telephone System (NMT) from Europe, the NTT group of systems from Japan and the Advanced Mobile Phone Systems (AMPS) of the United States. [5, 6]

During the early 1990s a Second Generation (2G) of mobile systems was developed. These systems replaced analogue modulation with digital modulation, thereby enhancing the quality of service offered to users at a reasonable cost [7]. 2G systems were, and still are, extremely popular with consumers worldwide, and it is primarily due to the popularity of this generation of systems that mobile communications have become as widespread and pervasive as they are today. Examples of such systems include the IS-95 system from North America, the Global System for Mobile Communications (GSM) which started in Europe but has become much more widespread, and the Personal Digital Cellular (PDC) System in Japan [5, 6, 7].

The commercial advent of the Internet occurred during the early to mid 1990s and over time mobile communications users began to demand access to Internet based communications services via their mobile terminal devices. In response to this demand several mobile communications standards were developed which specified how packet-switched networks could be overlayed on top of existing 2G systems [6, 7]. While these new systems did not fundamentally change or enhance the nature of the underlying technology, they did provide much needed additional functionality and rapidly became the stepping stone between 2G and the next generation of systems, 3G - they thus became known as 2.5G systems. Examples of such systems are the General Packet Radio Service (GPRS) and the Enhanced Data Rates for GSM (EDGE) systems [6, 7].

The most recent generation of mobile communications systems, the Third Generation (3G), was introduced during the early 2000s. The standards for the 3G systems were developed in terms of the International Telecommunication Unions's (ITU) International Mobile Telecommunications vision (IMT-2000) [5, 6, 7]. The objectives of 3G systems are to satisfy users' need for advanced multimedia and data services by making use of a packet-switched core network and providing high speed data rates. Two widely deployed standards for 3G systems exist, namely W-CDMA which was developed according to the Universal Mobile Telephone Service (UMTS) standard and CDMA2000 [5, 7].

Unfortunately the deployment of 3G systems has only been significantly successful in some countries such as Japan and South Korea [6]. A large number of mobile operators, primarily

located in Europe, are experiencing difficulties making a return on their 3G capital investment. The primary reason for their struggle can usually be traced back to the high cost of the original spectrum licensing fees coupled with the additional costs involved in actually setting up a new 3G cellular network [5, 6]. Consumers have also in general been dissatisfied with the quality and variety of the services delivered via 3G systems, thereby resulting in a further loss of revenue for mobile operators [5].

Over the past few years several new standards have been ratified in an attempt to improve the performance of 3G systems. These systems are built on top of existing 3G systems and have therefore become known as 3.5G systems. Examples of such systems include High-Speed Downlink Packet Access (HSDPA) and High-Speed Uplink Packet Access (HSUPA) [5]. Table 1.1 summarises the characteristics of each of the various generations of mobile communications systems.

Generation	**Major Standards**	**Estimated Throughput**	**Core Type**	**Characteristic Services**
1G	AMPS, NTT, NMT	-	Circuit-Switched	Voice Only
2G	GSM, PDC, IS-95	9.6kbps	Circuit-Switched	Voice Only
2.5G	GPRS, EDGE	64kbps	Packet-Overlay	Voice and Data
3G	W-CDMA, CDMA2000	384kbps to 2Mbps	Packet-Switched	Voice, Data and Multimedia
3.5G	HSDPA, HSUPA	1.8Mbps to 3.6Mbps	Packet-Switched	Voice, Data and Multimedia

Table 1.1: Summary of cellular mobile systems' characteristics

1.1.2 Evolution of Wireless Internet based Systems

During the 1990s, in response to public demand for cheap, reliable and high speed wireless Internet access, the IEEE's 802 working group developed the 802.11 group of standards. These standards, popularly known as WiFi, provided low cost high speed wireless Internet access in a Local Area Network (LAN) environment. WiFi systems provided a 'last mile' connection from a fixed Internet access system such as ADSL to a user's portable terminal. [6]

During the same period, the IEEE also developed another popular standard known as Bluetooth. These systems, developed under the 802.15 group of standards, allow users to connect terminal devices to one another in small pico sized areas (typical between 1m and 10m apart). Such systems have become popular in peer-to-peer based applications such as the connection of a cellular terminal to a wireless 'hands-free' kit. [7]

The early to mid 2000s saw the ratification of the IEEE's Metropolitan Area Network (MAN) based standards, known as 802.16. WiMAX systems, as these systems have become colloquially known, provide users with similar speeds to WiFi, but cover a much larger area (typically several kilometres). Due to the similarity in coverage size, some researchers believe that WiMAX systems will be in direct competition with 3G cellular mobile systems. Unlike other wireless Internet access systems, which are characterized as nomadic, the WiMAX 802.16e standard has the capacity to provide users with full hand-off capability, thereby enabling high levels of full mobility. [6]

Each of these three wireless standards has addressed a niche in the mobile communications industry, allowing users cheap and easy access to multimedia and data based services. The convergence of these wireless Internet access systems with cellular mobile systems should enable 4G networks to provide consumers with low cost services, using the optimum access network connection, wherever they are located [5, 6]. Table 1.2 summarises the characteristics of each of the three wireless Internet access systems discussed above.

System	**Standard**	**Coverage**	**Estimated Throughput**	**Typical Applications**
Bluetooth	802.15	1m - 10m	3Mbps	Peer-to-Peer Services (Nomadic)
WiFi	802.11	10m - 100m	54Mbps	Data, VoIP, Multimedia (Nomadic)
WiMAX	802.16	Several km	54Mbps	Data, VoIP, Multimedia (Mobile)

Table 1.2: Summary of wireless Internet access systems' characteristics

1.2 Visions of a Mobile Future

Convergence of existing wireless communications systems is a potential methodology which could be used to develop 4G systems [1]. Most researchers envisage a 4G future in which users will have access to high performance multimedia and data services using any terminal device, regardless of the user's location [5]. The primary point of contention amongst

researchers is how this dream will become a reality.

Researchers worldwide can be divided into two principal schools of thought. The first believe that 4G systems should be the result of the evolution and convergence of existing access network systems [5, 6, 1]. According to this group, the core of a 4G network will be packet-switched and may make use of the IP Multimedia Subsystem's (IMS) architecture. By evolving current systems and integrating them into a single homogeneous network, users will be able to connect to the most appropriate access network based on the level of resources required to run their application. This methodology has the advantage that telecommunications network operators will only need to upgrade their existing systems; however critics of this methodology question whether upgraded versions of legacy technology will ever be able to effectively and sustainably meet customers' needs.

A second group of researchers believes that 4G systems should continue along the same developmental route that cellular systems have followed until now [1, 5, 6]. This means that a new 4G based access network will be developed and deployed, resulting in current systems becoming legacy technologies. The obvious risk of this methodology is that operators may be unwilling to spend huge amounts of capital investment on a new access network system based on what happened during the deployment of 3G systems.

The ITU has attempted to adopt a middle path when addressing the issue and has commenced the development of Recommendation M.1645 [1] in which it outlines a belief that 4G systems should be a result of the convergence and evolution of existing wireless communications systems, as well as the development of a new 4G access network standard in order to meet the demands of users for advanced services. The projected deadline for the rollout of 4G systems varies between regions, however it is believed that the first 4G system are likely to be deployed between 2010 and 2015.

Clearly there are a substantial number of challenges which need to be addressed before a single global 4G standard can be drafted and ratified. The following section examines these challenges in more depth and explains how this report will make a contribution towards addressing and resolving these challenges.

1.3 Problem Statement

Development of 4G systems faces a number of challenges; the first of which is the development and agreement of a single conclusive definition of 4G, together with its objectives and specifications. The second challenge to be tackled covers the means by which researchers will converge and evolve existing communications systems into a single heterogeneous 4G

network or develop a new 4G access network system. Several commercial telecommunications operators have already shown that it is possible to converge and integrate their existing telecommunications systems; however the development of a new 4G access network raises a number of challenges that have yet to be tackled in reasonable depth.

These challenges can be formulated into two separate yet interlinked problems, namely:

- The development of a single conclusive definition of 4G systems
- Determining which candidate air-interface architecture could meet the required performance criteria if it were to be used in a new 4G access network

The creation of a conclusive definition for 4G systems in turn provides a framework for the evaluation of the candidate air-interface architectures for a new 4G access network. The focus of this report is the evaluation of two primary candidate air-interface architectures and their underlying technologies. A detailed comparison of these systems has yet to be performed in any of the current literature and the resulting contribution is therefore valuable as it provides an early recommendation as to which of the evaluated air-interface architectures would perform favorably within a new 4G access network.

1.4 Guide to the Report

This report consists of eight chapters which discuss various aspects of 4G communications systems and a new 4G air-interface:

- **Chapter 2**: Addresses the issue of the definition of 4G communications systems and attempts to provide a single conclusive definition of 4G and its requirements.
- **Chapter 3**: Discusses some of the basics of Orthogonal Frequency Division Multiplexing (OFDM) and how spread spectrum techniques can be used in conjunction with OFDM.
- **Chapter 4**: Examines two potential 4G air-interface architectures, known as Orthogonal Frequency Division Multiple Access (OFDMA) and Multi-carrier Code Division Multiple Access (MC-CDMA).
- **Chapter 5**: Provides an outline of the methodology involved in testing the two candidate 4G air-interfaces and the parameters used.

- **Chapter 6**: Analyzes the testing data of each of the air-interface candidates and makes a recommendation as to which one would provide optimum performance if used in a new 4G access network.

- **Chapter 7**: Reviews and summarizes the work covered in previous chapters, as well as confirming that the contribution has met the objectives outlined in the problem statement. It furthermore examines several new technologies that could increase the performance of 4G access networks and which should be the subject of future research efforts in this field.

Chapter 2

What is 4G?

Development of the first and second generation of mobile communication systems was conducted by numerous organizations and companies from different regions. Each of these groups created their own sets of standards with different characteristics and performance values, and interoperability between standards was extremely difficult [7]. The development of the third generation of mobile communications was the first time that a single organization steered the standardization process of an entire generation of mobile communications systems. The ITU guided the development of 3G systems through its IMT-2000 vision, with the purpose of creating a single global mobile communications standard [5]. The advantage of this centralized standardization process is that equipment from different manufacturers can be used within the same network. This creates supplier competition while still maintaining consistent levels of quality. Unfortunately due to the differences in legacy networks from different regions and other more political issues, the ITU had to agree to standardize two separate 3G systems, namely UMTS and CDMA2000 [5].

The deployment of 3G systems has been met with mixed reactions. In general users have been slow to adopt 3G services on offer, and mobile network operators are struggling to make a return on their capital investment. It is only in certain regions such as Japan that the uptake of 3G services has been a success [6]. The problems that 3G mobile operators are facing are being further compounded by the introduction of newer competing technologies such as WiMAX and WLAN systems [8]. With these issues in mind, researchers have begun to focus their attentions on the next generation of mobile systems as a means of resolving their problems. This next generation, known as the Fourth Generation or simply 4G, is expected to resolve current limitations within 3G systems such as high cost of deployment, insufficient throughput to support high performance services and lack of flexibility to develop new services demanded by users, which should in turn allow mobile operators to generate a reasonable return on their investments [9, 10].

The chief difficulty facing 4G system development lies in the numerous opinions being offered by different standards bodies which are all vying for their systems and ideas to be incorporated into a single global 4G standard. In a sense, this approach of decentralised and fragmented development is similar to the situation which faced the mobile communications industry during the development of the first and second generations of mobile systems. The ITU has initiated attempts to try to bring all the relevant parties together and will host a discussion regarding 4G standardization and spectrum allocation during next year's WRC (World Radiocommunications Conference) 2007 [1], however this may already be too late. Certain organizations, notably Japan's NTT DoCoMo and the 4G Samsung Forum, have already begun to develop 4G systems of their own and it is unlikely that they will be willing to simply drop their newly developed systems in favor of standards developed via the ITU [5]. Hence there is a significant danger that unless a concrete objective definition of 4G systems is developed quickly and agreed upon, fragmented and incompatible 4G systems will be developed which will in turn result in higher costs due to users not benefiting from the economies of scale which have to date helped to drive the rapid expansion of mobile telephony on a global scale. The purpose of this chapter is to provide a clear objective definition of 4G systems by first examining the requirements and specifications of such systems and then examining the different developmental methodologies being proposed to meet those requirements.

2.1 A user-orientated specification for 4G systems

Previous generations of mobile systems have been developed using a benchmark service methodology. This approach involves choosing a set of benchmark services and then developing systems to deliver these services. An inherent weakness with this process is that if the chosen benchmark services do not meet users' expectations, mobile operators will be unable to sell these services when they are deployed [5, 11]. This is precisely the situation that 3G mobile network operators find themselves in today, where users accustomed to broadband Internet based services have been disillusioned by the limitations of multimedia services provided over 3G. This implies that a paradigm shift in the methodology used to develop the fourth generation of mobile communications systems is required.

The Internet is an example of an extremely successful communications network. This level of success can be primarily attributed to the fact that it has always been user driven [6]. This means that the technology has been merely the means by which users are provided with services while the services have been identified and selected by the users. This methodology is drastically different from the benchmark methodology used to develop cellular systems and is considered by many researchers to be the only means by which 4G systems should

be developed in order to successfully attract user support. Figure 2.1 illustrates the differences in the development process of a new communications system, when using either the benchmark services methodology or the user-orientated services methodology.

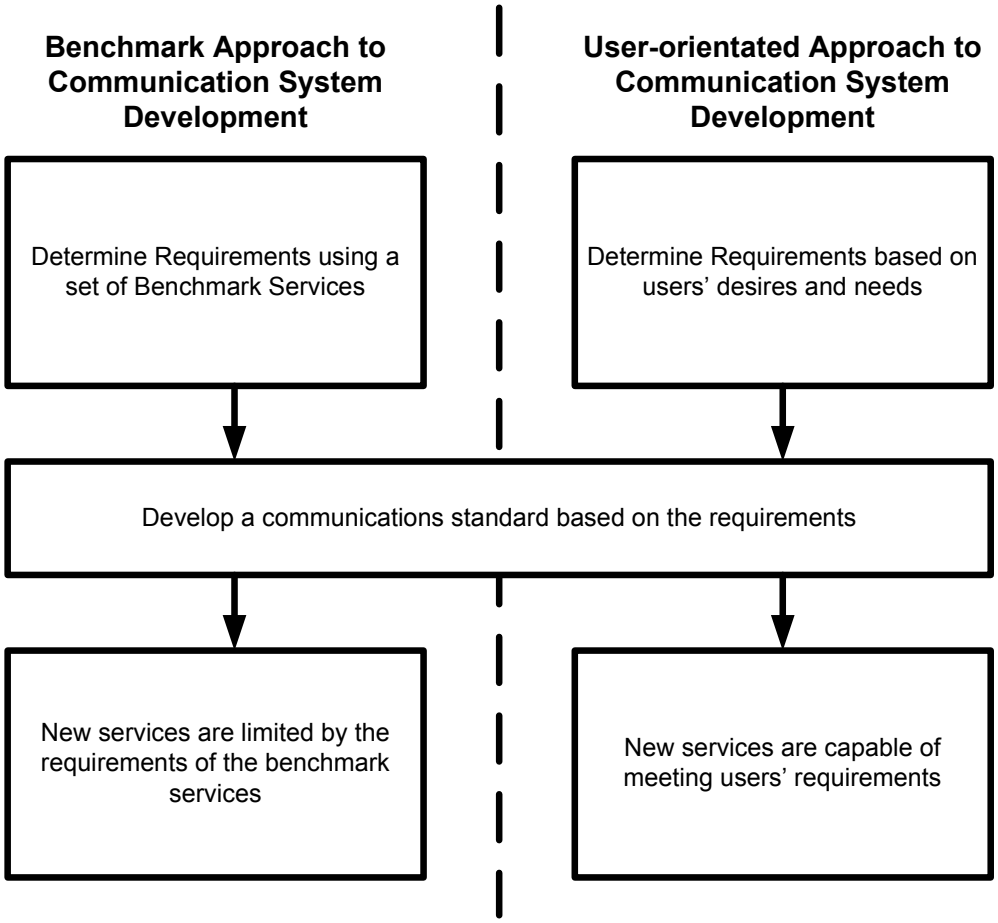

Figure 2.1: The differences in the development of communication systems when using the benchmark services methodology or the user-orientated services methodology

Implementing a user-orientated process to develop the specifications for 4G systems involves examining current user trends and predicting what users will want for several years to come. Based on extensive surveys and analysis of market research, various organizations and influential researchers have created a list of user trends around which 4G systems should be designed. They are as follows [5, 11, 12, 13, 14, 15]:

- **High Levels of Connectivity** - Perhaps the most dominant of all requirements is the ability of users to be able to access mobile services any time and any place. This form of ubiquitous networking will allow users to connect to the most appropriate access network available in order to be able to make use of any service they desire. This presents researchers with a number of challenges including how different types

of access networks should be interconnected, how these networks will interface with a multitude of different terminals, and how to achieve a seamless hand-off between different access networks.

- **Personalization** - Users are individuals and as individuals they prefer to be treated as such. A rather new concept in mobile communications is the use of personalized services. By making use of information unobtrusively obtained about each user, mobile operators can tailor their services to each user's individual needs. This creates a number of issues that developers will need to address including privacy, security, and the increased bandwidth that will be needed to support these new personalized services.

- **High Performance Access Systems** - It is a safe bet that current mobile networks will be unable to support the resource demands of new high performance services in the years to come. This implies that a new 4G system will be needed to provide users with a high performance access network. It is important to note that high throughput alone will not guarantee the success of a system, as new high performance services will also be needed to exploit the potential of the increased performance characteristics. Together with increased throughput, a number of other criteria are important when seeking to increase the performance of an access network. These include higher capacity, larger coverage areas, increased spectral efficiency and the capability to seamlessly hand over users' terminals between different access networks.

- **User Friendliness** - Key characteristics of a successful service are simplicity and user friendliness. If a service is devised that is extremely difficult to use, users will be more likely to search for alternative systems to deliver the services they require. This concept of user friendliness extends to terminal devices as well as to all legacy equipment.

- **Cost Effectiveness** - Users are more likely to make use of a service if it is deemed to be more cost effective than an alternative service offering. A classic example of this is the Skype VoIP service, where users can make 'free' on-net phone calls using their Internet connections.

- **Efficient Service Development** - As previously mentioned, a key factor in the success of the Internet has been that users are able to choose which services they wish to avail of. Another key factor has been the involvement of users in the creation of such services. The open source community is a rather unique social phenomenon whereby users volunteer their time and knowledge to create applications for other Internet users. This process has led to the development of a number of extremely user friendly and highly successful Internet applications, examples of which include the Internet browser Firefox, various distributions of the operating system Linux and so

on. This efficient process of service development could become a useful component of 4G systems if functionality is provided to allow users to develop their own 4G services and applications.

These trends are a combination of all the characteristics that users most desire to see in the next mobile communications system. It is also interesting to note that most of these trends overlap in a number of areas. Figure 2.2 provides an illustration of these trends and their overlapping characteristics. Now that a set of requirements have been established, it is possible to examine the developmental methodologies which could be used to create the 4G standard.

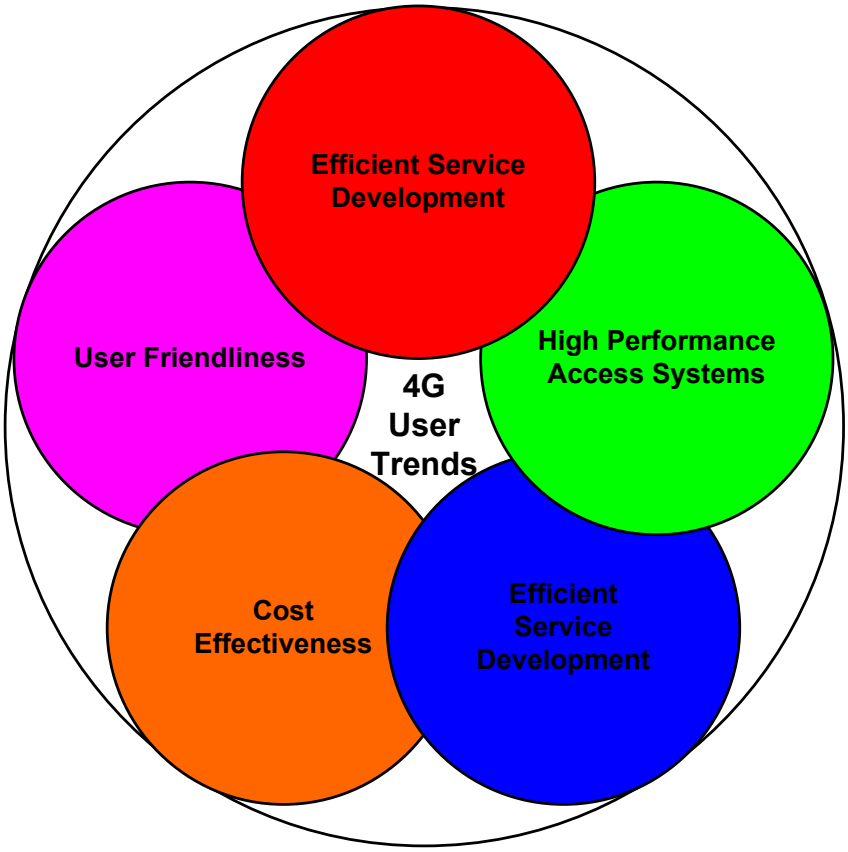

Figure 2.2: Current user service trends which form the requirements for the user-orientated development of 4G systems

2.2 Developmental methodologies for 4G Systems

The development of a new universally agreed 4G standard is not going to be an easy task. Even if all parties can agree on the methodology to be used in developing 4G systems, there are numerous technical challenges that must be resolved. As was mentioned in the introductory chapter, there are two different schools of thought as to which methodology provides the superior developmental path. The first group of organizations and individuals are primarily located in Europe and believe that 4G systems should be based on the integration and convergence of existing systems into a new heterogeneous 4G network [5]. The primary reason for their support of this methodology may lie in the large amount of capital that European mobile operators have invested in 3G equipment and spectrum licenses, investments which for many have yet to generate a return, and which some may never be able to recover. A problem with this methodology is that there are a number of inherent limitations in current 3G systems which may not be resolved merely by evolving the current standards.

A group of organizations and individuals, primarily located in the American and Asian regions, believe that due to the current limitations of current systems, a totally new 4G system must be developed [5]. By adopting this approach they believe that they will be able to start from a 'clean-slate' and be able to create a new standard which will best satisfy users' needs. Examples of organizations following this approach are the IEEE's 802.20 working group, the 4G Samsung Forum and Japan's NTT DoCoMo mobile operator.

The ITU has tried to take a middle path regarding these two methodologies and has outlined its initial vision for 4G systems via Recommendation M.1645 [1]. According to the ITU the development of 4G systems should be addressed via a combination of both evolution and revolution, where evolution will involve the convergence and enhancement of existing mobile systems, while revolution refers to the development of a revolutionary new 4G access network to provide users with access to services which enhanced versions of current mobile systems will simply not be able to provide. This vision pays tribute to both the European and the American and Asian visions, and addresses the needs of both regions. Figure 2.3 illustrates the concept of a converged 4G network, with existing, evolved and new access network systems all connected with an IP based core network. Each of these developmental methodologies requires researchers to tackle a large range of issues, many of which will be discussed in the following two subsections.

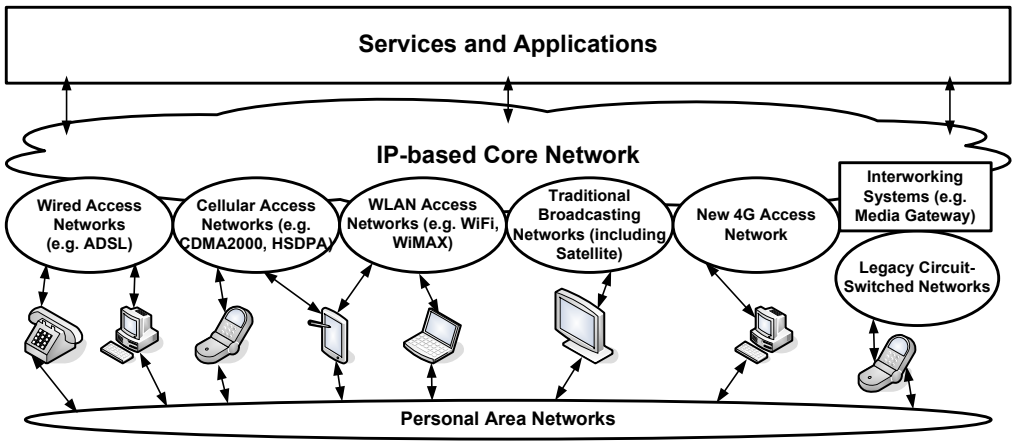

Figure 2.3: Converged 4G Network Architecture

2.2.1 Evolution of Current Mobile Communication Systems

Satisfying users' demands for access to high performance services at any time and from any place is a daunting task for developers. The only realistic solution is to converge existing access network systems, thereby providing users with access to different types of access networks depending on their service requirements, geographical location and terminal capabilities. It is also important to continue evolving the capabilities of current systems in an attempt to provide more advanced services. The evolution and integration of mobile communications systems will involve the convergence of cellular mobile systems, access networks such as WiFi and WiMAX, broadcasting, satellite and even fixed access networks [5, 12].

This convergence of different types of access networks will allow mobile operators to provide new advanced types of services that make use of the capabilities provided by more than one access network, a fact which will decrease costs for both users and mobile network operators. As has previously been explained, 3G systems cannot supply users with access to new high performance multimedia services, and while these systems could be upgraded using technologies such as HSDPA or HSUPA, convergence introduces the possibility of also making use of a WiFi or WiMAX based overlay network instead. This approach has the advantage of reducing additional infrastructure costs and as many users will already have access to WiFi or WiMAX terminals, it will also cost the user less overall.

In order to properly integrate different types of access networks, a structured approach is needed. According to the ITU the optimal architecture for a converged 4G heterogeneous network involves the deployment of a layered access network system based on coverage,

mobility, and performance [1]. It will be the responsibility of mobility management software to determine the optimum access network which will fulfill each user's specific needs. This decision could be based on the QoS requirements of a service, taken in combination with a user's location and the available access networks. For example, if a user is located in a remote area and wants to make a phone call, the optimum access network may be a satellite based system if no other access networks are available. In contrast if a user wants to view a streaming multimedia service and is located in a urban area, the network may offer several alternatives including access via a WiFi hotspot, a WiMAX cell or an HSDPA connection. Figure 2.4 illustrates the concept of a converged layered network structure, by categorizing systems based on their throughput and mobility. The figure also indicates the roles of existing, evolved and new communications systems and is based on a diagram from the ITU in [1].

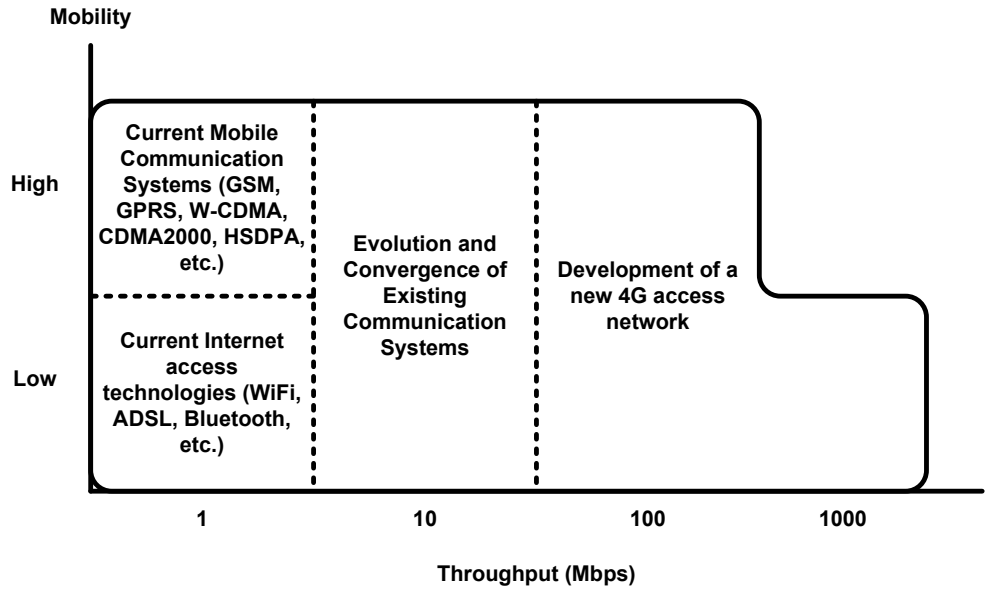

Figure 2.4: The integration of the evolution and convergence and the revolution developmental methodologies, based on the 'VAN' diagram from the ITU in [1]

The various access networks will be interconnected via an IP based core network, possibly based on the IMS architecture. The choice of an IP based core network is motivated by the increasing use of data services which are more efficiently provided using packet-switched networks [1]. Obviously as circuit-switched legacy systems are unlikely to be phased out in the near term, it will be necessary to provide interface systems to bridge the old and the new.

This convergence of existing systems also presents a number of additional challenges, including how to interface the various networks into a single system, how vertical handover

between different types of access networks will occur, how to ensure end-to-end security of a connection, and the methods which will be used to provide users with an itemized bill when numerous service providers have been involved during the billing period [5, 12].

A relatively new concept known as Personal Area Networks (PANs) could also be incorporated into a converged 4G system. This concept involves the use of low coverage systems, such as Bluetooth, to provide new and interesting short-range services. Examples of this could include peer-to-peer communications, connections to fixed access networks for more reliable communications and many others [5].

2.2.2 A Revolutionary New Access Network

While the evolution and integration of existing access networks will provide users with adequate resources for the short term, new and advanced services will be developed which current or evolved versions of current systems will be unable to support [1]. Based on this fact developers have begun to research the types of access network technologies which would be the optimum choice for a new advanced 4G access network.

In Recommendation M.1645 [1] the ITU provided a set of guidelines for the technical specifications of a new 4G access network. These guidelines are only temporary as the official specifications will be determined after WRC 2007 when the issues regarding spectrum allocation for a new air-interface will be discussed. Presently the specifications state that the new access network must provide a throughput of 100 Mbps shared between all mobile users in a cell and 1 Gbps shared between all nomadic users. Due to the current spectrum allocations for various access networks, it is likely that any new spectrum for a 4G system will be in a higher frequency band compared to current 3G systems, which will have the effect of decreasing the size of the coverage area of each cell. As spectrum is a scarce resource is also important that any new access network have a high spectral efficiency value.

These primitive technical specifications have already been accepted by most developers as the initial requirements for a new 4G access network. Based on a detailed literature survey of the most recent 4G research, it is almost universally agreed that there is only one access network technology that will enable a new system to meet these specifications. This technology, known as Orthogonal Frequency Division Multiplexing (OFDM), is a highly spectrally efficient form of multicarrier transmission and has been extensively researched and used in a number of access networks such as DVB-T, WiFi, Hiperlan, and WiMAX [2]. The experience gained during the development of these systems will aid researchers when designing the new 4G access network, allowing them to meet the specifications and expectations discussed above.

There are a number of organizations that have already begun to develop access networks for 4G based on OFDM; these include Japan's NTT DoCoMo, Samsung's 4G Forum, and Flarion which has developed Flash-OFDM [5]. Although there are a vast number of organizations and researchers designing 4G access networks, there are very few objective comparisons between the various 4G access network architectures and it is for this reason that the second part of this report will examine potential 4G access network air-interfaces.

2.3 An Objective Definition of 4G Systems

The requirements for a 4G system and the methodologies needed for developing a system to meet those requirements were discussed in the previous two sections. Making use of this information it is now possible to develop an objective definition of 4G systems:

Fourth Generation Mobile Systems represent the evolution and convergence of existing and new access networks, connected via an IP-based core network, with the purpose of providing users with the ability to access any type of service from any location (fixed or mobile) at any time at the required QoS with a high degree of security using any type of terminal. Such networks will be cost efficient and will require that users only require one subscription in order to be capable of availing of all services. Users will also be able to personalize each service to meet their individual needs and circumstances.

This definition incorporates all of the aspects of 4G systems discussed thus far and provides an objective view of which aspects the standard should incorporate. Unfortunately this definition, while complete in its description of a superior 4G system, may also prove to be unrealistic to implement. History has shown that independent standards organizations are unlikely to work together towards a single standard unless it enables them to meet their own objectives. This fact was clearly evident during the standardization process for 3G systems, when the ITU was forced to recognize two separate access networks to meet the competing demands of two separate groups of standards bodies.

A more realistic vision of the 4G standardization process involves the creation of two separate but complementary sets of standards. The first set of standards will involve the evolution and integration of existing communications systems. This will allow the standards bodies that developed their access networks to evolve them to meet the needs of users and to work together in a united effort to provide interoperable functionality between the different types of access networks. The second set of standards will involve the specification of new 4G access networks that will meet the future needs of users and will be developed to be interoperable with evolved legacy systems.

The advantage of this strategy is that it will allow all interested parties to continue and build on the research and development they have already conducted on their own and new access networks, while still moving towards the vision of a united 4G system. It will be the responsibility of the ITU to develop a set of guidelines in line with which interested parties can develop interoperable access networks. This approach is not dissimilar to that of the open source community where voluntary groups develop different systems, but they are all capable of interoperating as they all run over the Internet.

Now that a realistic and objective vision of 4G systems has been outlined, the next section will begin examining the basic concepts needed to develop a new 4G air-interface.

Chapter 3

Orthogonal Multicarrier Systems

The specifications outlined in the previous chapter require an access network architecture capable of providing a high throughput for all users while also delivering a high spectral efficiency. The only realistic option when selecting such an architecture is to make use of multicarrier systems, as they are capable of achieving a high spectral efficiency while also being highly resilient to the effects of frequency selective channels [2].

Perhaps the most advanced multicarrier technique at present is Orthogonal Frequency Division Multiplexing, or OFDM. OFDM is by far the most spectrally efficient of all multicarrier schemes and has already been used in the development of a number of well-known standards, including WiFi (802.11), DVB-T, WiMAX (802.16) and even ADSL [2, 16]. This represents a key advantage for OFDM as the vast amount of research already conducted into this scheme should provide sufficient knowledge to enable an advanced system to be developed to meet 4G specifications.

The use of spread spectrum technology in multicarrier systems has been the subject of a large amount of research over the last few years. Such schemes combine the advantages of OFDM with standard spreading schemes such as those found in DS-CDMA. These architectures could also present developers with an alternative to consider when determining the technologies that could be used to provide the optimal 4G access network system [2, 16].

The following two sections will discuss the basic concepts involved in the development of an OFDM system and how spread spectrum systems can be used in conjunction with basic OFDM to form a multicarrier spread spectrum system (MC-SS).

3.1 Orthogonal Frequency Division Multiplexing

Orthogonal Frequency Division Multiplexing can be viewed as both a modulation scheme and a multiple access scheme [5]. Chapter 4 examines the use of OFDM as an access architecture, however the purpose of the following subsections is to outline the concepts involved in using OFDM as a modulation scheme.

3.1.1 Basics of OFDM

The basic principle underlying OFDM is that a high-rate serial data stream can be multiplexed onto a number of lower-rate parallel substreams. These substreams are then modulated onto a number of frequency subcarriers, which are in turn then combined to form the bandwidth of the system and transformed into a discrete time based signal [16, 17]. Figure 3.1 illustrates the concept of OFDM modulation.

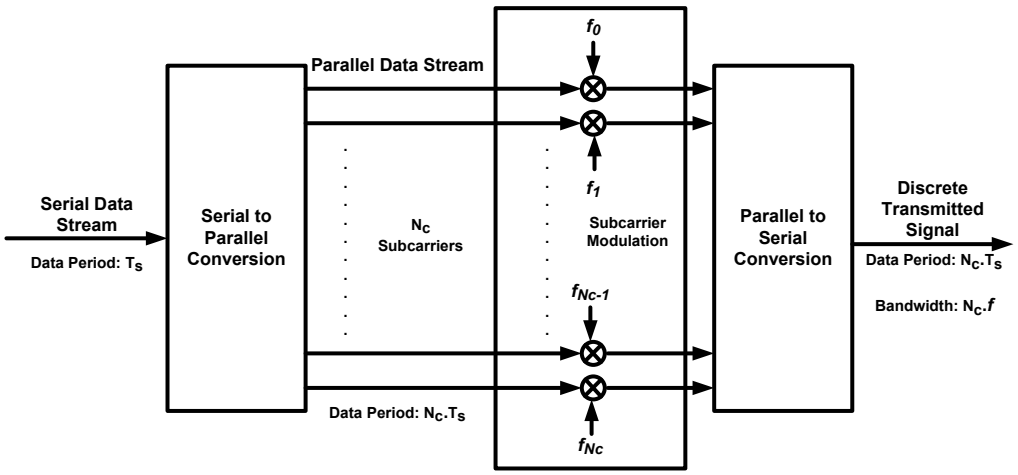

Figure 3.1: Orthogonal Frequency Division Multiplexing Modulation

Initially this principle may appear to be no different to conventional Frequency Division Multiplexing (FDM); however while FDM requires the use of guard bands between the subcarriers in order to avoid Intercarrier Interference (ICI), OFDM creates an orthogonal relationship between the subcarriers such that the spectral components of other subcarriers are null at the peaks of each individual subcarrier. OFDM also has the additional benefit that as there are no guard bands, the spectral efficiency of the system and its performance is vastly superior to that of conventional FDM [16, 17]. Conventional FDM differentiates each subcarrier's amplitude through the detection of the guard bands placed between subcarriers. OFDM on the other hand relies on the orthogonal relationship between subcarriers which ensures that each subcarrier signal is located at a specific frequency, and if a rectangular time

window filter is used, ICI can be minimized or even eliminated altogether. This concept is illustrated in Figure 3.2.

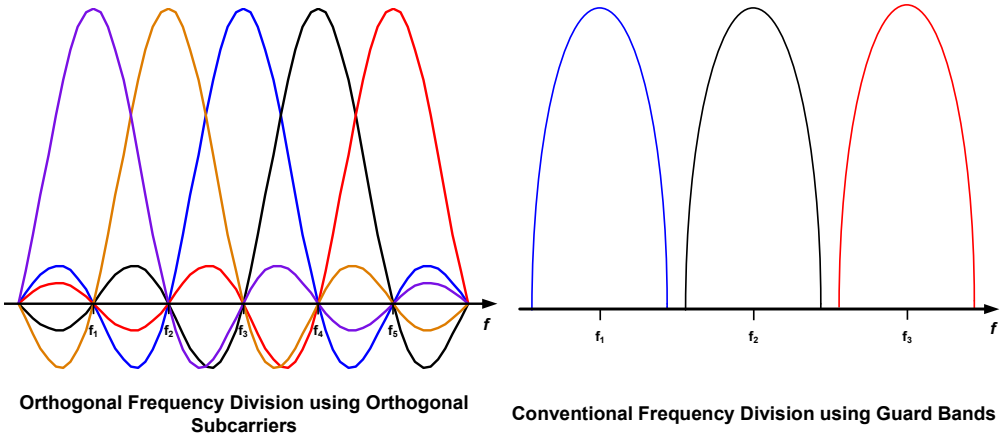

Figure 3.2: Comparison between the subcarrier construction in OFDM and FDM

A key advantage of OFDM systems is that if sufficient subcarriers are used the symbol period increases to the point at which it exceeds the duration of the multipath delay spread, thereby providing a high level of resilience to Intersymbol Interference (ISI) [16]. A disadvantage of this approach is that due to the high data rate requirements of new advanced services, fewer subcarriers may be required, generating increased ISI. To completely eliminate ISI, a process known as Guard Interval insertion is used in modern OFDM systems and the underlying principles of this are covered in Section 3.1.3.

Mathematically an OFDM system can be represented by Equation 3.1 [16]

$$
\begin{aligned}
&x(t) = \tfrac{1}{N_c} \sum_{n=0}^{N_c-1} S_n e^{j2\pi f_n t}, \quad 0 \le t \le T_s \\
&\text{where :} \\
&N_c - \text{ Number of subcarriers} \\
&S_n - \text{ Data symbol to be modulated onto subcarrier } n \\
&f_n - \text{ Frequency of subcarrier } n \\
&T_s - \text{ Duration of symbols after multiplexing to substreams}
\end{aligned}
\tag{3.1}
$$

and the subcarrier frequency and symbol duration are related by Equation 3.2 [16].

$$
f_n = \tfrac{n}{T_s}, \quad n = 0, \ldots, N_c - 1 \tag{3.2}
$$

3.1.2 The Discrete Fourier Transform in OFDM Systems

When OFDM systems were initially conceived in 1966, it was considered unfeasible to develop a commercially available high performance OFDM system due to the fact that extremely accurate oscillators and bandpass filters were required for each subcarrier. The discovery that the Discrete Fourier Transform (DFT) could be used to perform the same function using digital signal processing allowed researchers to overcome this obstacle [17]. Modern systems make use of the more computationally efficient Fast Fourier Transform (FFT) allowing developers to implement systems with several thousand subcarriers using modern digital electronics. An illustration of where the FFT is inserted into the OFDM modulation process can be seen in Figure 3.3.

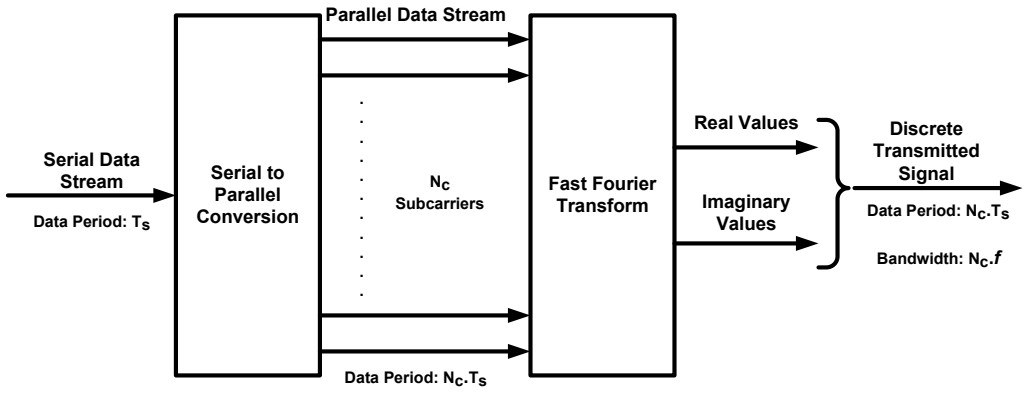

Figure 3.3: OFDM Modulation by means of the Fast Fourier Transform

The use of the DFT (or the more computationally efficient FFT) has become essential to the development and implementation of modern OFDM based systems. In contrast to outdated methods which make use of analog oscillators and filters, the DFT enables the use of high speed analog-to-digital converters (ADC) and digital-to-analog converters (DAC), allowing all signal processing to be performed using high performance digital processing systems.

Modern OFDM systems make use of complex modulation, more commonly referred to as IQ modulation. IQ modulation is the process whereby the Real and Imaginary discrete values generated by the DFT are combined into a single analog waveform, using two oscillators 90 degrees out of phase, for the purposes of transmission. IQ modulation has the benefit that complex forms of digital modulation, such as Quadrature Amplitude Modulation, can be used prior to the calculation DFT, thereby increasing the data transmission rate of the system.

For the purposes of clarity, it should be noted that throughout the rest of this text, any discussion revolving around the term symbol refers to the discrete complex values generated

by the DFT (also referred to as the OFDM symbol) with the prepended Guard Interval values which will be examined in the next section. All other data symbols will make use of a prefix to indicate their position within the air-interface process, e.g. binary symbol, digital modulation symbol and so on.

3.1.3 Insertion of the Guard Interval

Whilst OFDM systems naturally exhibit a high degree of resilience to the effects of multipath propagation, it is necessary to insert a guard interval before each OFDM symbol to completely eliminate ISI. The guard interval is a cyclic extension of the OFDM symbol and is acquired by copying the last few digital samples of the symbol and then prepending them to the existing OFDM symbol [17]. The guard interval is placed at the front of the OFDM symbol so that the ISI generated from a delayed version of the previous symbol will not corrupt the main OFDM symbol. It is important to note that the guard interval is constructed using a cyclic extension of the existing system and in so doing it removes any residual out-of-band noise that would have been generated had the guard interval simply been a null signal [2]. Figure 3.4 illustrates the construction of the guard interval and its ability to eliminate the effects of ISI.

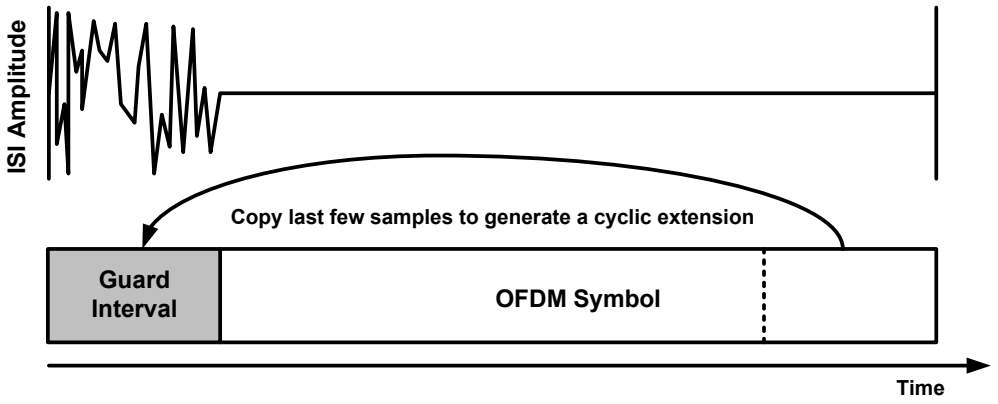

Figure 3.4: Construction of the OFDM Guard Interval

Mathematically, the construction of the Guard Interval is represented by Equation 3.3, and the manner in which the Guard Interval is prepended to an OFDM symbol, is illustrated in Equation 3.4.

$$
\begin{aligned}
& G(t_g) = S(t_s), \\
& \ T_s - T_g \leq t_s < T_s \\
& \ 0 \leq t_g < T_g \\
& \text{where :} \\
& G(t_g) - \text{ Waveform in Guard Interval} \\
& S(t_s) - \text{ OFDM Symbol Waveform} \\
& t_s - \text{ time index for Guard Interval} \\
& t_g - \text{ time index for OFDM Symbol} \\
& T_s - \text{ Period of OFDM Symbol} \\
& T_g - \text{ Period of Guard Interval}
\end{aligned}
\tag{3.3}
$$

$$
\begin{aligned}
& R(t) = \begin{cases} G(t), & 0 \leq t < T_g \\ S(t), & T_g \leq t < T_s \end{cases} \\
& \text{where :} \\
& R(t) - \text{ OFDM Symbol Waveform with Guard Interval Prefix} \\
& G(t) - \text{ Waveform in Guard Interval} \\
& S(t) - \text{ OFDM Symbol Waveform} \\
& T_s - \text{ Period of OFDM Symbol} \\
& T_g - \text{ Period of Guard Interval} \\
& t - \text{ time}
\end{aligned}
\tag{3.4}
$$

Upon receipt of the symbol, the receiver will remove the guard interval from the front of the symbol, thereby eliminating the part of the signal that would have been corrupted by multipath propagation. An additional benefit of this action is that the effects of multipath propagation which cause ICI are also eliminated. The addition of the Guard Interval takes place after the serial-to-parallel operation depicted in Figure 3.3.

A disadvantage of the use of the guard interval is that, while it improves the system's resilience to the wireless channel, it decreases its spectral efficiency. It is therefore necessary to reach a compromise when determining the length of the guard interval. If the guard interval is too long it will decrease the spectral efficiency of the system and thereby decrease the throughput; if it is too short the effects of the wireless channel will degrade the performance of the system and this will result in a decrease in throughput [2]. The decision regarding this parameter needs to be made based on the characteristics of the environment within which the system will operate, and on the requirements of the services which the system will provide.

3.1.4 Performance of OFDM Systems

The performance of an OFDM system is determined by a number of factors which affect its ability to cope with errors and its data throughput. The following sections outline these factors and the effects they have on OFDM systems.

Digital Modulation

Digital modulation refers to the process by which the binary serial stream is assigned to complex-valued data symbols before being modulated onto subcarriers using OFDM. Due to the fact that OFDM systems effectively eliminate ISI and ICI, the performance of the system is primarily determined by the level of noise in the wireless channel. As OFDM does not contain any form of digital compression or symbol mapping, the type of digital modulation used primarily determines the system's performance in terms of throughput and resilience to noise [17].

Common choices of digital modulation for OFDM systems are Phase-shift Keying (PSK) and Quadrature Amplitude Modulation (QAM) [17]. To further improve the performance of OFDM systems in a noisy environment it is necessary to make use of channel coding techniques and interleaving. Chapter 4 provides a detailed examination of digital modulation as it is employed in access architectures.

Frequency Selective Channels

Multicarrier systems are inherently resistant to the effects of frequency selective channels. In contrast to single carrier systems, the effect of frequency selective fading does not cause a decrease in the performance of the entire system. Only a few subcarriers are affected by the fading and as a result the system's overall performance is only slightly reduced. OFDM systems however make use of a far more tightly clustered array of subcarriers and so whilst they exhibit a much greater resilience to frequency selective channels than single carrier systems, far larger numbers of subcarriers are affected than would occur in conventional FDM systems. Figure 3.5 illustrates multicarrier systems' resilience to frequency selective fading compared to singlecarrier systems and was constructed using material from [2].

In comparison to single carrier systems, multicarrier systems adopt a significantly simpler approach when correcting the effects of frequency selective channels. Single carrier systems require the use of complex adaptive equalizers to estimate the channel transfer function and make corrections; however in multicarrier systems each subcarrier can be corrected

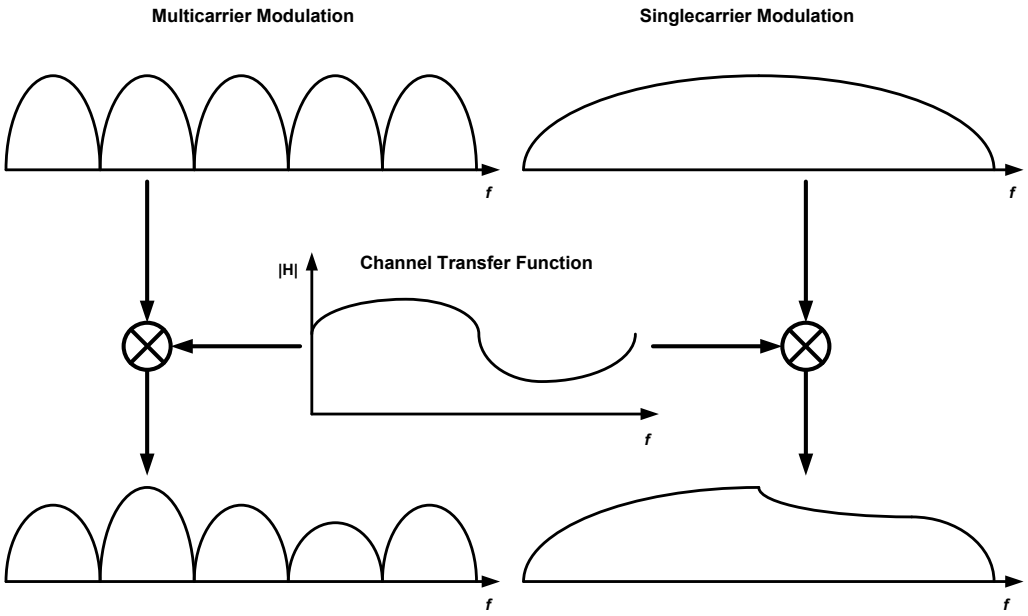

Figure 3.5: Comparison between the Multicarrier and Singlecarrier Modulation in Frequency Selective Channels (constructed from material in [2])

separately using a simple one-tap equalizer [5]. Chapter 4 will examine the methods used to estimate the channel transfer function and the equalizers that are then employed to make corrections.

Doppler Shift

The effect of the Doppler spread on OFDM systems is to cause a shift in the frequency domain [16]. As discussed in the next section on synchronization, any effect that causes an adjustment in the synchronization of the system can have a detrimental affect on the system's performance. To eliminate the effect of the Doppler shift on OFDM systems, the subcarrier bandwidth must be adjusted such that it exceeds the maximum Doppler shift and accurate synchronization techniques must be employed [16].

In order to illustrate the effect that the Doppler spread has on OFDM systems, the frequency shift generated when an OFDM mobile terminal is moving towards the base station at 120 km/h was considered, using the following example: If the bandwidth of the system is 102.4 MHz, the subcarrier spacing is 100 kHz, the carrier frequency is 2.8 GHz and the speed of light is approximated to $3\text{x}10^8$ m/s, then the frequency of the transmitted signal can be calculated as follows (Where F_c is the frequency of the carrier signal and F_o is the bandwidth of the symbol):

$$
\begin{aligned}
F_{Tx} &= F_c + F_o \\
F_{Tx} &= 2.8 \text{ GHz} + 102.4 \text{ MHz} \\
F_{Tx} &= 2.9024 \text{ GHz}
\end{aligned}
$$

After transmission through the mobile wireless channel the received signal's frequency is shifted based on the Doppler spread. This frequency shift can be calculated as follows (where v is the mobile terminal's velocity and c is the approximated speed of light):

$$
\begin{aligned}
F_{Rx} &= F_{Tx}.\left(1 + \tfrac{v}{c}\right) \\
F_{Rx} &= 2.9024 \text{ GHz}.\left(1 + \tfrac{33.\dot{3} \text{ m/s}}{3\text{x}10^8 \text{ m/s}}\right) \\
F_{Rx} &\approx 2.9024 \text{ GHz}
\end{aligned}
$$

Initially it may appear from the above calculation that the Doppler spread had no effect; however if the received signal is demodulated from its carrier signal, and a comparison between the transmitted signal bandwidth and received signal bandwidth is performed, it is observed that a slight frequency shift of approximately 322.5 Hz did occur:

$$
\begin{aligned}
Fr &= F_{Rx} - F_c \\
F_{shift} &= Fr - F_o \\
\Rightarrow \quad F_{shift} &= F_{Rx} - F_c - F_o \\
F_{shift} &= 2.9024\ldots \text{ GHz} - 2.8 \text{ GHz} - 102.4 \text{ MHz} \\
F_{shift} &= 322.489 \text{ Hz}
\end{aligned}
$$

While the magnitude of this frequency shift may appear to be little cause for concern, it should be noted that any shift in the frequency domain causes ICI and therefore if the velocity of the vehicle were to increase the frequency shift would also increase proportionately. The creation of ICI as a result of Doppler spread is shown in Figure 3.6, which illustrates the inaccuracy of the discrete sampling introduced by the frequency shift. In Figure 3.6, the black dotted lines indicate where an OFDM system should sample the received signal, while the red dotted lines indicate where an OFDM system without proper correction algorithms would sample the received signal.

Synchronization

Perhaps the greatest disadvantage of OFDM systems is their sensitivity to synchronization errors. There are two forms of synchronization errors which occur in OFDM systems; those

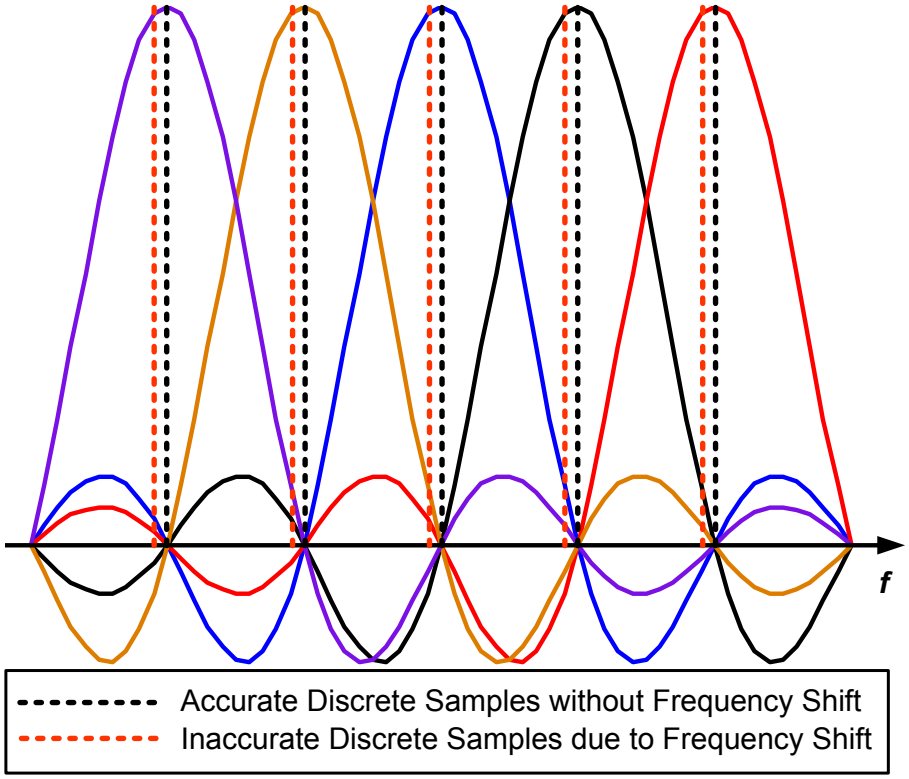

Figure 3.6: The effect of Doppler spread on the sampling of a received OFDM signal

caused by time offsets and those caused by frequency offsets [16]. Timing synchronization errors are a result of the receiver inaccurately detecting the start of a symbol or even an entire frame. The result of such an error is that it causes massive ISI as data from one symbol 'spills' over into another symbol's data. In order to correct this problem, synchronization symbols are prepended to frames which allows the receiver to detect the start of a frame and to accurately separate the symbols [16, 17].

Any shift in the frequency domain will cause a frequency synchronization error; this can occur as a result of an offset in the receiver's oscillator or as a result of Doppler shift (as discussed in the previous section). The impact of a frequency shift is that when the FFT is calculated, the data on the subcarriers interfere with each other causing ICI [16]. Correction of frequency synchronization errors can be performed by placing pilot symbols on a special symbol at the start of the frame and calculating the length of the offset [17]. This information can then be used to perform a correction by altering the frequency of the receiver's oscillator.

Chapter 4 examines the algorithms used to correct synchronization errors in more detail; however as discussed in Chapter 5, the simulations which have been conducted to determine the optimum access network for 4G systems ignored synchronization errors due to the excessive complexity involved in their estimation and correction.

Phase Noise

The use of digital modulation in OFDM systems requires that OFDM transceivers are capable of generating complex-valued analog signals. These signals are generated after the DFT using two sinusoidal oscillators that are 90° out of phase, representing the real and imaginary components of the digital signal. This process of complex digital to analog conversion is referred to as IQ modulation [17]. Figure 3.7 illustrates the process of IQ modulation, where the discrete complex-valued symbols generated by the DFT are combined into a single analog waveform for transmission.

Phase noise is generated when an IQ imbalance occurs, i.e. whenever the two oscillators are not perfectly synchronized a phase offset occurs between the two analog signals [17]. This results in an inaccurate interpretation of the symbols and can be viewed as having a similar effect to a synchronization error. The process to correct this problem involves the use of pilot tones and the adjustment of the phases of the IQ generator oscillators.

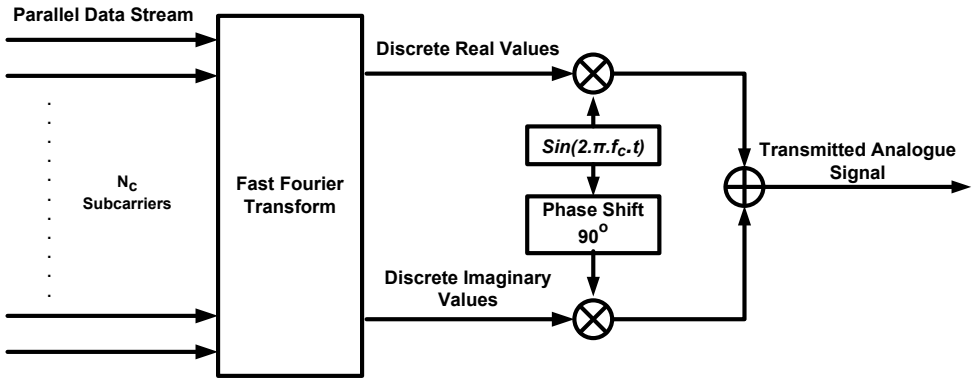

Figure 3.7: The use of IQ Modulation in an OFDM System

Non-linear Amplification

Signals generated using OFDM fluctuate heavily and usually have a high peak-to-average power ratio (PAPR). This can cause significant distortion if the signal is passed through an amplifier exhibiting non-linear amplification properties. In the event that non-linear amplification occurs, out-of-band noise is introduced which generates ICI and potentially ISI, the effect of which severely degrades the performance of the system [2, 17]. In order to reduce the effect of non-linear amplification, most commercial OFDM systems operate with a back-off on the amplification of the signal; in other words the signal is amplified such that the highest possible power of the signal is much less than the highest output power of the amplifier.

3.1.5 Advantages and Disadvantages of OFDM Modulation

To summarize this discussion of OFDM and its use as a modulation scheme in communications systems, Table 3.1 illustrates the advantages and disadvantages of OFDM based on the information presented above.

3.2 OFDM in Spread Spectrum Systems

The use of spread spectrum techniques in 3G systems and the use of OFDM in WiFi systems has prompted many researchers to investigate how these two techniques can be combined

Advantages	Disadvantages
High Spectral Efficiency	Loss of Spectral Efficiency due to Guard Interval
Low complexity receivers that are resilient to ISI and ICI	Sensitivity to synchronization errors, phase noise and doppler spread
Each subcarrier can be modulated using a different scheme	Sensitive to Non-linear Amplification
Resilient to the effects of Frequency Selective Channels	
Simple realization of subcarrier modulation using the FFT	

Table 3.1: The advantages and disadvantages of OFDM as a modulation scheme

and if there is any benefit in their combination. The following subsection will examine the concept of spread spectrum and its use as a modulation scheme. Subsequent subsections will examine the means by which OFDM and spread spectrum systems can be combined and the performance increases which result.

3.2.1 Direct Sequence Spread Spectrum

Direct Sequence Spread Spectrum (DSSS) is a modulation technique whereby a signal is transmitted over a much wider bandwidth than is actually necessary. In order to spread the initial signal over a wider bandwidth, DSSS systems make use of special code sequences which are independent of the signal being transmitted [16]. An illustration of the basic concept of spread spectrum can be seen in Figure 3.8.

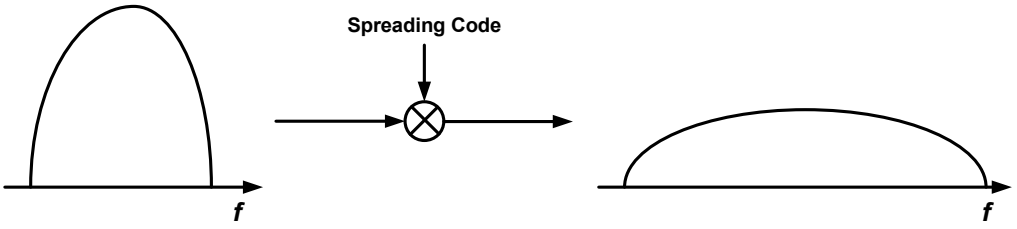

Figure 3.8: The effect of spreading codes on a narrow band signal

Spread spectrum codes are specifically chosen such that they exhibit low cross-correlation and high auto-correlation characteristics [17]. By making use of multiple codes, numerous data symbols can be spread and transmitted at the same time. Upon receipt of a signal, the matching code sequence must be correlated with the signal to acquire the transmitted data symbol. The process of using DSSS as modulation scheme to separate different users' data is DS-CDMA and is represented mathematically by Equation 3.5. The process illustrated by this equation is the normal method used to spread data symbols. The method used in MC-CDMA, which will be discussed in the next section, uses a slightly different methodology.

$$
\begin{aligned}
& x(t) = \sum_{k=0}^{K-1} d^k \sum_{l=0}^{L-1} c_l^k p_{T_c}(t - lT_c), \;\; 0 \leq t < T_c \\
& \text{where :} \\
& x(t) \; - \; \text{Transmitted signal} \\
& K - \; \text{Maximum Number of Users} \\
& d^k - \; \text{Data Symbol of User } k \text{ at } t \; (0 \leq t < T_c) \\
& L - \; \text{Length of the Spreading Code} \\
& c_l^k - \; \text{Chip } l \text{ of User } k \text{ Spreading Code} \\
& p_{T_c} - \; \text{Rectangular Pulse} \\
& T_c - \; \text{Chip Period}
\end{aligned}
\tag{3.5}
$$

The performance of the DSSS modulation scheme is measured by means of a ratio known as the processing gain. Equation 3.6 illustrates the method for calculating the processing gain [16].

$$
\begin{aligned}
& P_G = \tfrac{B_{org}}{B_{ss}} \\
& \text{where :} \\
& P_G - \; \text{Processing Gain} \\
& B_{org} - \; \text{Original Signal Bandwidth} \\
& B_{ss} - \; \text{Spread Signal Bandwidth}
\end{aligned}
\tag{3.6}
$$

The higher the value of the processing gain, the more noise-like the spread signal will appear to be and it will require less power to transmit [16]. However, if the processing gain is too high, the signal will be more prone to interference thereby decreasing the performance of the system.

DSSS systems suffer from a number of problems due to the noise-like nature of the signals they produce and the correlation between the codes used. As these problems affect both conventional and OFDM based spread spectrum systems, they will be discussed in a following section on the performance of DSSS when used in conjunction with OFDM.

3.2.2 OFDM and Spread Spectrum

In 1993 several groups of researchers each proposed a methodology to combine DSSS and OFDM and they named this form of modulation OFDM-SS [2]. Instead of spreading the transmitted data symbols in the time domain, which is the method used in conventional DSSS systems, OFDM-SS spreads the data symbols in the frequency domain prior to the modulation of the data onto the OFDM subcarriers.

The exact methodology used to spread the symbols and map them to subcarriers varies between different implementations, however the most common practice is to spread all of the data symbols across all the subcarriers by means of a code sequence equal to the length of the number of subcarriers. This technique forms the core of the most popular OFDM-SS system known as MC-CDMA [2]. The process of OFDM-SS modulation, as used in MC-CDMA systems, is illustrated in Figure 3.9. It should be noted that the period of the spreading codes and each data symbol in the parallel data stream are identical due to the serial to parallel conversion that takes place immediately prior to the multiplication of the codes with the data symbols.

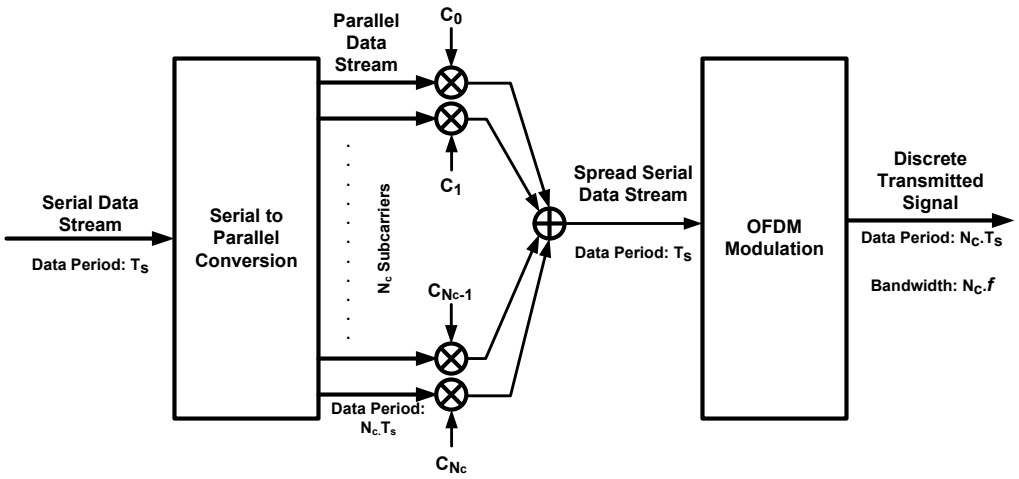

Figure 3.9: OFDM-SS Modulation as used in MC-CDMA systems

By making use of all of the available subcarriers to transmit data symbols, OFDM-SS systems can take full advantage of the frequency diversity across the entire bandwidth of the system thereby improving the performance of OFDM-SS systems over standard OFDM systems [16].

There are a variety of options as to which spreading codes should be used in OFDM-SS systems; however due to their zero cross-correlation properties, Orthogonal Walsh-Hadamard codes are usually used. Due to their properties these codes exhibit a much higher resilience

to multiple access interference (MAI) than pseudo-random codes; however they are far more sensitive to the effects of synchronization errors [17]. The concept of MAI is discussed in the following section.

3.2.3 Performance of OFDM-SS Modulation

The performance of OFDM in combination with DSSS is determined by a number of factors which affect its ability to cope with errors and its data throughput. The following sections will examine the effects of these factors on the performance of the system.

Effect of OFDM Modulation

Due to the influence of OFDM as a core component of OFDM-SS systems, certain similar factors have an effect on the performance of both systems. OFDM-SS systems are highly spectrally efficient and are resilient to the effects of ISI and ICI [16]. Unlike OFDM systems, OFDM-SS systems require the use of far more complex equalization schemes due to the effect of the frequency selective fading channels on the noise-like spread signals [17]. The equalizers used in OFDM-SS systems will be discussed in more detail in Chapter 4.

In contrast to OFDM systems, and as has already been discussed in the previous section, OFDM-SS modulation takes full advantage of the frequency diversity offered by the use of all of the available subcarriers within the system's bandwidth thereby improving on the performance of the system at low signal levels [16].

Multiple Access Interference

Perhaps the most significant detrimental factor encountered when making use of any spread spectrum modulation is multiple access interference (MAI). The basic underlying principle of MAI is that as more codes are used to spread data symbols, the signal to noise ratio of the system decreases. At a certain point, the ratio falls below the threshold at which data can be coherently detected, thereby effectively destroying the communications capability of the system [7].

In an attempt to eliminate the effects of MAI, researchers have developed a number of equalization schemes specifically for spread spectrum systems which make use of all available data to improve the performance when a high number of codes are used. As a high number of codes usually corresponds to a large number of users, these equalization schemes are

known colloquially as user detection algorithms [17]. As was stated above, Chapter 4 will examine equalization schemes in more detail.

The Near-Far Problem

Due to the noise-like nature of spread signals, users who transmit over a large distance to the base station may suffer from performance degradation due to interference from a much higher power signal transmitted by a user much closer to the base station [7]. This problem, known as the Near-Far problem, is an inherent weakness in spread spectrum systems when used in a cellular environment and must be corrected by the use of highly accurate terminal power control methods which adjust the output power of each user's transmitted signal based on his or her distance from the receiver.

Walsh-Hadamard Spreading Codes

As was discussed in the previous section, it is common practice to use Orthogonal Walsh-Hadamard spreading codes in modern OFDM-SS systems due to their zero cross-correlation properties. Unfortunately the negative consequence of using these codes is an increased sensitivity to synchronization errors.

OFDM systems are inherently sensitive to synchronization errors and as a result so are OFDM-SS systems, but as Walsh-Hadamard codes suffer from high cross-correlation values when they are not synchronized, OFDM-SS systems are even more sensitive to synchronization errors than conventional OFDM systems.

While Walsh-Hadamard codes decrease the performance of OFDM-SS systems compared to OFDM systems (in terms of synchronization sensitivity), the use of these codes also improves the systems' performance in terms of non-linear amplification sensitivity [16]. The use of different types of spreading codes naturally decrease the PAPR of the transmitted signal and use of Walsh-Hadamard codes can decrease the ratio to less than twice the spreading code length.

3.2.4 Advantages and Disadvantages of OFDM-SS Modulation

To summarize this discussion of OFDM-SS and its use as a modulation scheme in communications systems, Table 3.2 illustrates the advantages and disadvantages of OFDM-SS based on the information discussed above.

Advantages	**Disadvantages**
High Spectral Efficiency	Loss of Spectral Efficiency due to Guard Interval
Low complexity receivers that are resilient to ISI and ICI	Extremely sensitive to synchronization errors, phase noise and Doppler spread
Each substream can be modulated using a different scheme before spreading	Requires the use of user detection algorithms to eliminate MAI and the effects of Frequency Selective Fading Channels
Resilient to Non-linear Amplification	Requires the use of high performance power control algorithms
Simple realization of subcarrier modulation using the FFT	
Makes better use of Frequency Diversity	

Table 3.2: The advantages and disadvantages of OFDM-SS as a modulation scheme

Chapter 4

Candidate 4G Air-Interface Architectures

When designing a new access network, perhaps the most important single component is the air-interface. The air-interface contains the physical layer of the access network as specified in the OSI Reference Model. Multiple access schemes are the most important component of the physical layer of the access network, as they divide the available physical communications resources between subscribers, or users, so that they are able to simultaneously access their requested services. Currently, there are four basic forms of multiple access schemes, each based on the division of one physical resource [7, 17]:

- **Time Division Multiple Access (TDMA):** Each user is allocated a period of time during which they may transmit or receive data.
- **Frequency Division Multiple Access (FDMA):** Each user is allocated a frequency band or channel which they may use to transmit or receive data.
- **Code Division Multiple Access (CDMA):** Each user is allocated a unique code word which is used to modulate their data such that all users can transmit over the same frequency band at the same time, without experiencing excessive of interference.
- **Spatial Division Multiple Access (SDMA):** Each user's signal experiences different levels of interference from environment effects. SDMA models the interference that each user's signal experiences and uses this information to identify users. This is usually achieved through the use of multiple antennae.

These basic multiple access schemes can be combined to form hybrid schemes, thereby increasing the performance and capacity of the access network system. Based on the modulation schemes discussed in the previous chapter, two primary types of hybrid multiple access schemes can be implemented. These architectures provide the functionality to transmit and receive data for any number of users and could form the core of a 4G air-interface.

The following two sections examine these two multiple access schemes, namely OFDMA and MC-CDMA, and the following section discusses how these schemes could be integrated with various forms of encoding, digital modulation and other communication components to create a high performance air-interface architecture for a new 4G access network system.

4.1 OFDMA

Orthogonal Frequency Division Multiple Access (OFDMA) is a multiple access scheme which makes use of OFDM modulation to allocate one or more subcarriers to each user depending on the number of available subcarriers and the demands of the services being provided [2, 16, 17]. Figure 4.1 provides a diagram of the OFDMA transceiver architecture for a base station and Figure 4.2 provides a diagram of the OFDMA transceiver architecture for a mobile terminal.

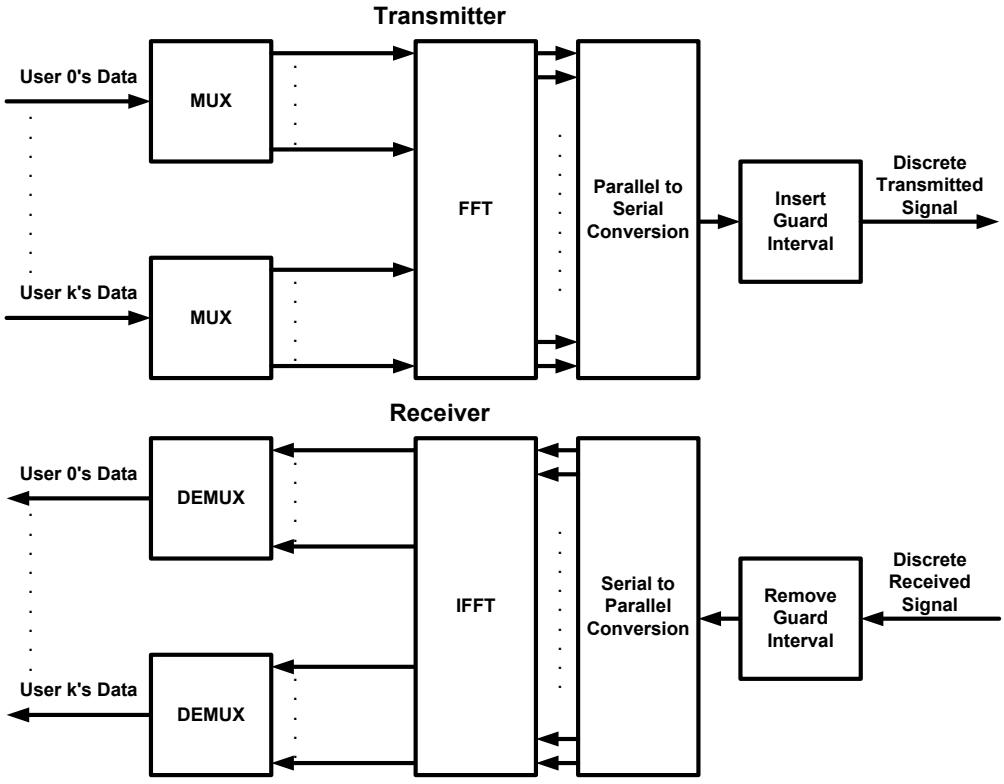

Figure 4.1: The architecture of an OFDMA transmitter and receiver for a base station

The allocation of subcarriers can be performed using one of two methods; the first and simplest is to allocate specific subcarriers to users for the duration of their transmission. This method has the disadvantage that if frequency selective fading consistently distorts the same set of subcarriers, the group of users allocated to those subcarriers will suffer from a

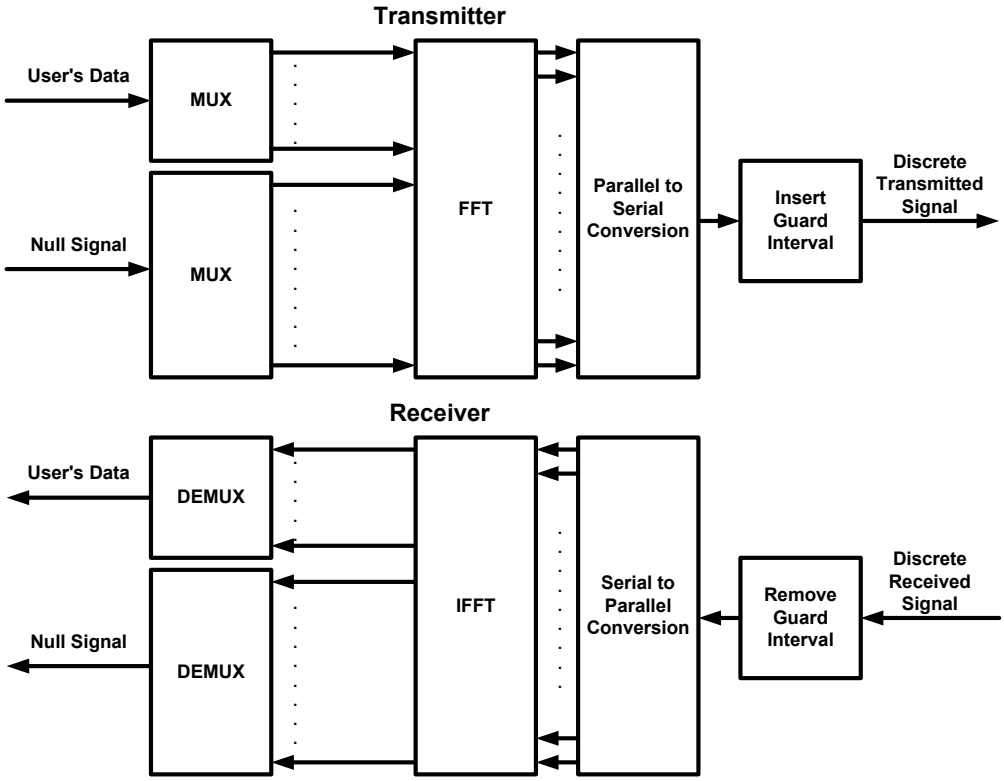

Figure 4.2: The architecture of an OFDMA transmitter and receiver for a mobile terminal

severe degradation in performance. The alternative subcarrier allocation method involves the use of dynamic allocation whereby the subcarriers are reallocated to different users after a specified period of time. This method has the advantage that it makes full use of the frequency diversity and averages out the performance decreases of specific subcarriers across all users.

Dynamic subcarrier allocation can be performed by randomly interleaving the data assigned to specific subcarriers after each set of data symbols are transmitted. This approach is far more computationally efficient than actually assigning user data to subcarriers dynamically and is the methodology used during the simulations described in Chapter 5.

4.2 MC-CDMA

Multicarrier Code Division Multiple Access (MC-CDMA) is a multiple access scheme that makes use of OFDM-SS modulation to spread users' data symbols and assign the combined signal to all of the available subcarriers [2, 16, 17]. In contrast to OFDMA, where the number of subcarriers allocated to a specific user can be manipulated based on the requirements of services, conventional MC-CDMA only transmits one symbol from each user per

OFDM frame. Theoretically, users could be assigned more than one spreading code; however this may result in increased MAI. Figure 4.3 provides a diagram of the MC-CDMA transceiver architecture for a base station and Figure 4.4 provides a diagram of the MC-CDMA transceiver architecture for a mobile terminal.

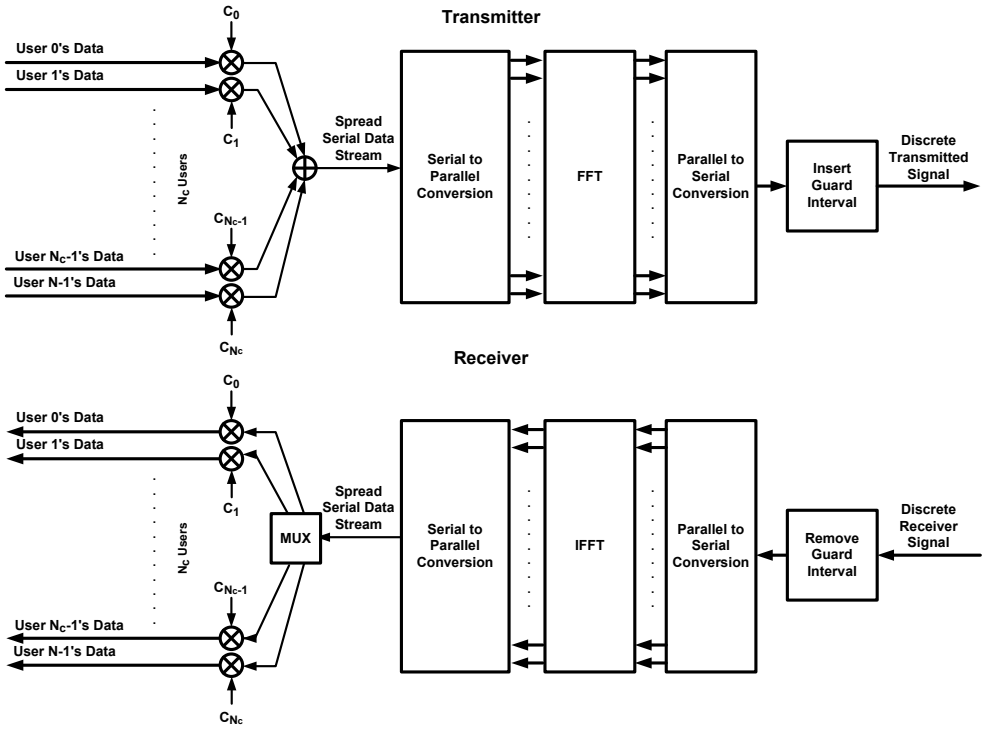

Figure 4.3: The architecture of an MC-CDMA transmitter and receiver for a base station

M-Modification is a methodology used by many developers to increase the amount of data each user can transmit in a single OFDM symbol [16]. By decreasing the length of the spreading code to a fraction of the number of available subcarriers, an MC-CDMA system can transmit multiple groups of spread signals from all users at the expense of decreased frequency diversity. Figure 4.5 illustrates the concept of M-Modification and its use in an MC-CDMA base station.

In a sense M-Modification is similar to the subcarrier interleaving used in OFDMA as these techniques provide some of the benefits of both the code and frequency domains while still maintaining their multiple access nature. Due to the increased performance gained from M-Modification, it was used during the simulations carried out in Chapter 5.

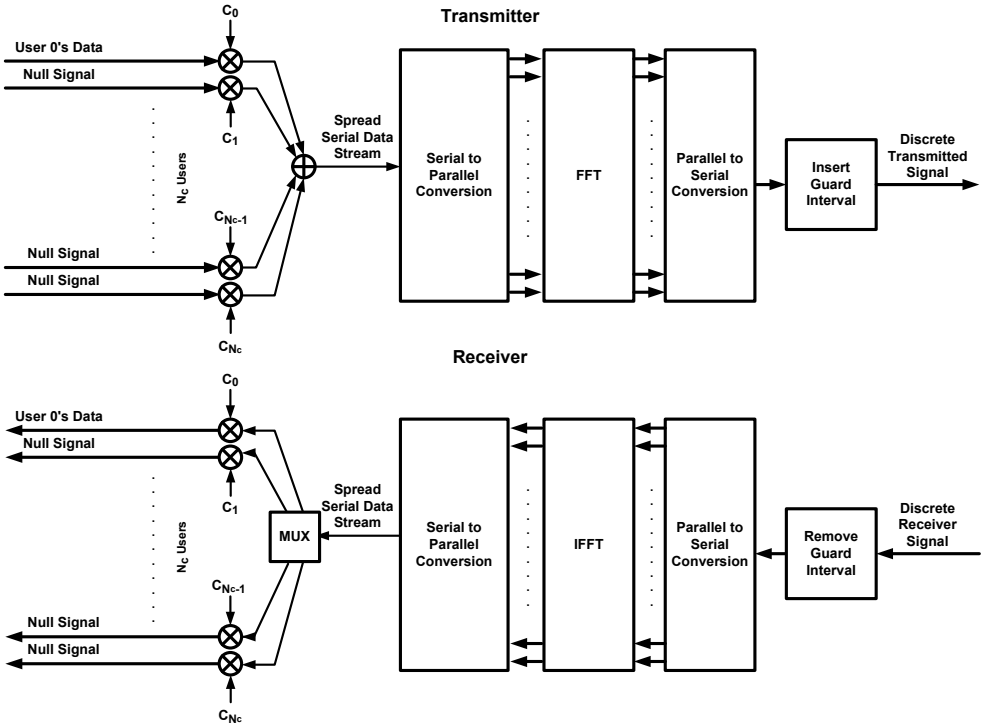

Figure 4.4: The architecture of an MC-CDMA transmitter and receiver for a mobile terminal

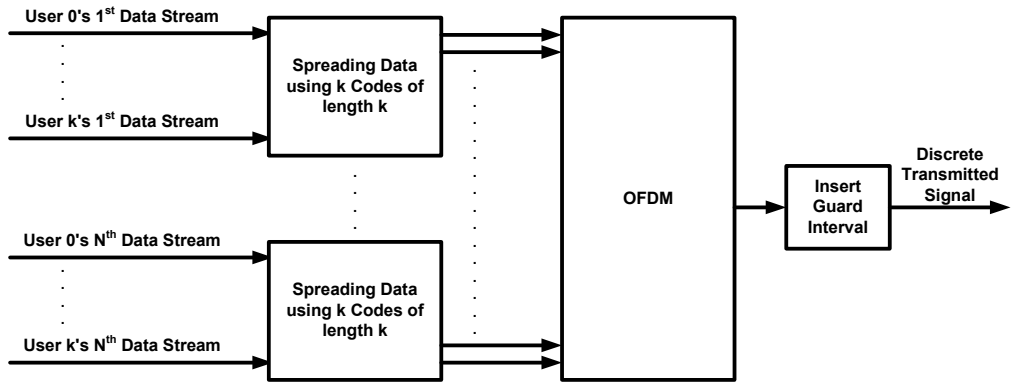

Figure 4.5: M-Modification in an MC-CDMA Base Station

4.3 A Generic 4G Air-Interface Architecture

By examining the similarities between OFDMA and MC-CDMA it is possible to develop a generic air-interface architecture that can be adjusted to assign users' data based on either of these two multiple access schemes. The architecture also contains components that are present in any mobile communications system, including channel coding, interleaving, constellation mapping for digital modulation, synchronization and channel estimation and equalization. A diagram of this architecture can be seen in Figure 4.6.

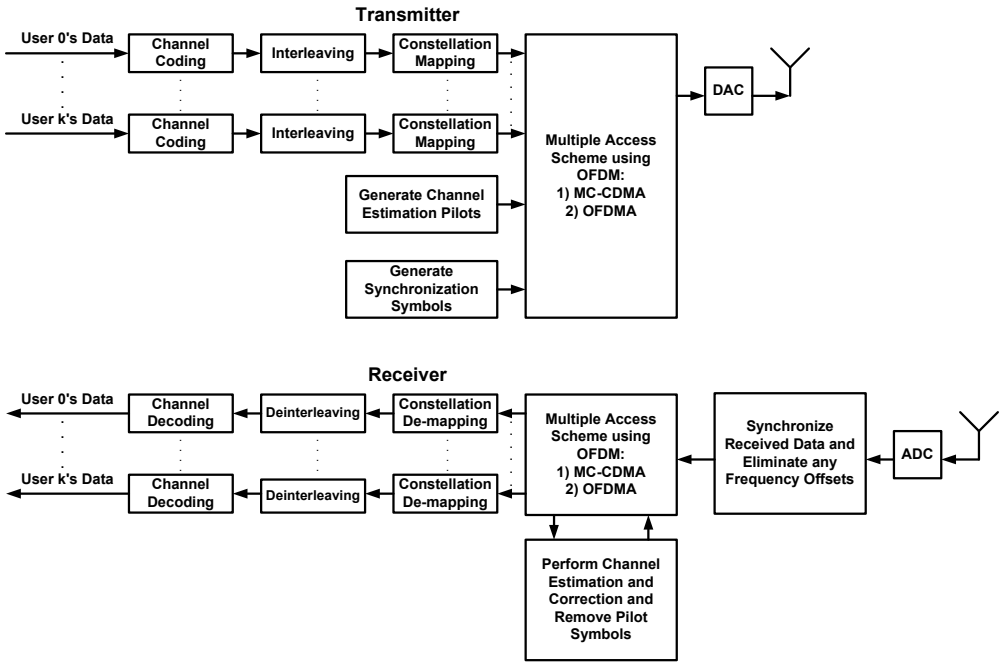

Figure 4.6: A Generic 4G Air-Interface Architecture

This generic architecture, based on OFDMA and MC-CDMA, is a candidate air-interface for a new 4G access network system. Chapter 5 examines the suitability of each of the multiple access schemes within this architecture in order to determine which will perform more favorably in a new 4G access network. The components chosen to create this architecture are the basic set of algorithms required to transmit and receive a user's data within a realistic wireless environment. There are many additional techniques that could be implemented to enhance the performance of the system, however they are outside the scope of this report and their exclusion will not affect the performance comparison of OFDMA and MC-CDMA based air-interface systems. Chapter 7 briefly examines some of these additional techniques, as an introduction to potential future research that could be conducted in this field.

The following subsections examine the various components contained in the generic air-interface architecture and outline the effects they have on the system's performance.

4.3.1 Channel Coding

Channel coding is a form of forward error correction (FEC) which increases the resilience of the communications system to random errors generated in the wireless channel [2]. There are many forms of channel coding which could be used in the 4G air-interface architecture; however numerous researchers have shown that high performance results can be achieved in multicarrier systems with punctured convolutional coding [16]. Whilst more sophisticated forms of coding such as turbo coding could be used, punctured convolutional coding has the advantage that it provides a high level of resilience to random errors and is relatively simple to implement.

Convolutional coding involves the use of a finite-state shift register to hold all the data bits currently being encoded. The register contains K stages and n linear algebraic function generators which are attached to every stage in the register. As bits are placed onto the input stage of the register, the succeeding bits are shifted into the following stages of the register. The algebraic function generators sample each stage of the register according to a pre-specified set of generator polynomials and produce the output bits of the encoder. A diagram of a convolutional encoder can be seen in Figure 4.7. [2]

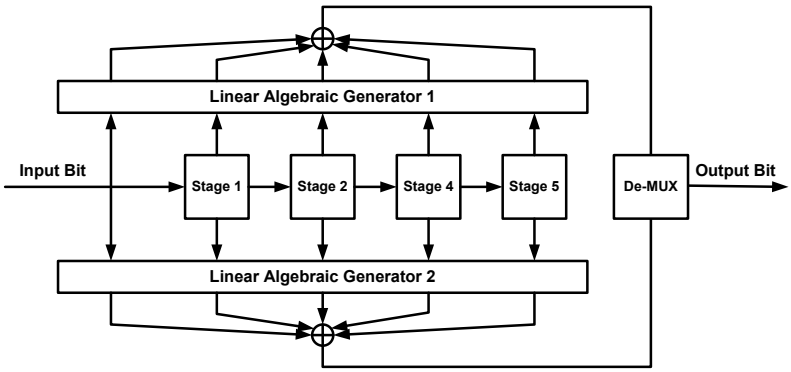

Figure 4.7: Convolutional Encoder with a 4-Stage Shift Register, 2 Linear Algebraic Function Generators, 1 Input Bit and 1 Output Bit

The coding rate of a convolutional encoder refers to the ratio between the number of input bits and output bits. This ratio, in combination with various other parameters, determines the 'free distance' value encoder. The 'free distance' is a measure of the Hamming distance of the encoded data and determines the number of errors the encoder can correct within a specified period of time [2]. By manipulating the parameters of a coding algorithm, the

code rate can be modified, thereby increasing or decreasing the resilience of the encoded data against transmission errors and the number of data bits transmitted per frame.

Decoding an encoded sequence is performed by means of the state-driven Viterbi algorithm. As there are a set number of finite-states for the encoding of a sequence, the Viterbi algorithm calculates the probability that an error occurred during transmission and makes a decision as to the correct value based on this probability [16].

The use of punctured codes in convolutional coding creates a bit-mask over the output of the encoder, thereby only allowing certain bits to be transmitted [16]. If the mask is chosen correctly, a punctured convolutional encoder can achieve much higher coding rates than would ordinarily be possible which improves the performance of the system.

4.3.2 Interleaving

The use of channel coding in communications systems delivers benefits only if the errors generated by the wireless channel are of a random nature. Bursty errors, which are common in burst based transmission schemes, will decrease the performance of the channel coding algorithm and the system as a whole. In order to alleviate this problem, it is common practice to randomly interleave each user's data stream after channel coding such that if a burst error were to occur during transmission, it would appear to be a set of random errors after de-interleaving [2]. The method used to interleave the data bit stream is largely irrelevant; however a popular choice is the use of random block interleavers as they can be easily adjusted such that the size of the interleaving block exceeds the period of the maximum burst error period.

4.3.3 Constellation Mapping

Constellation mapping refers to the digital modulation of bit streams into complex-valued data symbols. This process, which was briefly discussed in Chapter 3, largely determines the data throughput of the system [17]. In multicarrier systems there are only two primary choices of digital modulation schemes, namely phase-shift keying (PSK) and quadrature amplitude modulation (QAM). In order to meet the high performance throughput requirements of 4G systems, QAM is the more appropriate choice as it can achieve much higher levels of modulation than PSK [17].

The complex-valued data symbols produced through digital modulation must be converted into analog signals before they are able to be transmitted through the radio channel. This

process is known as IQ mapping and was briefly discussed in a previous chapter. Figure 4.8 illustrates the position of 16-QAM symbols in a scatterplot and how these points are mapped to sine and cosine waves so they can be transmitted. The sine and cosine waves represent the real and imaginary components of the complex-valued digital symbols, and their amplitude directly corresponds to the position of the complex-valued symbol in the scatterplot. The period of each wave depends entirely on the bandwidth of the system and the sampling rate of the ADC. In the simulations described in the following chapter, digital models of the wireless propagation environment were constructed and as such the modeling of the analog sine and cosine waveforms was unnecessary.

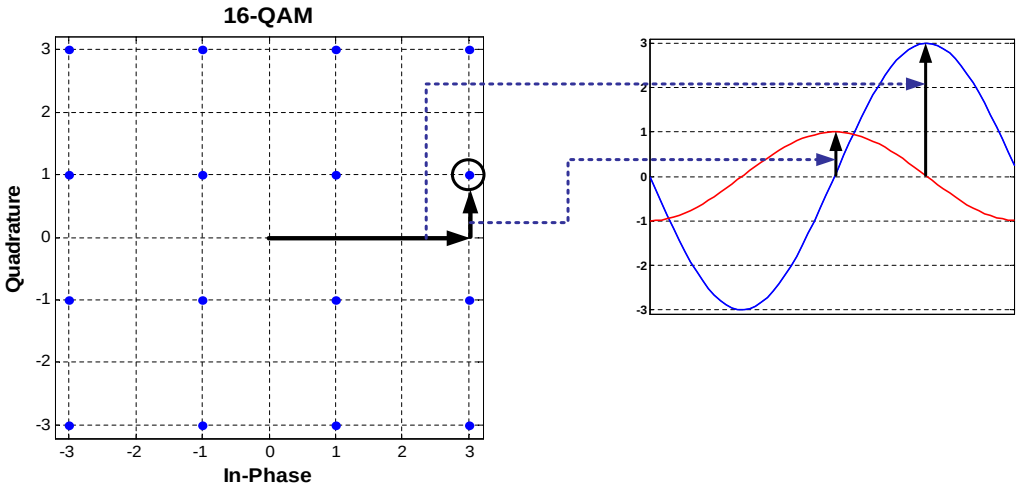

Figure 4.8: A Constellation Map showing 16-QAM digital modulation symbols and how these are mapped to sine and cosine signals.

A disadvantage of QAM in multicarrier systems is that it is highly vulnerable to the effects of frequency selective fading channels. While it is true that as a whole multicarrier systems are far more resilient to frequency selective fading than single carrier systems, the use of QAM as a digital modulation scheme requires that multicarrier systems make use of channel estimation and equalization schemes to enhance the performance of those subcarriers corrupted by interference. The use of channel estimation and correction is discussed in Section 4.3.6.

As with any modulation scheme the greater the size of the modulation alphabet, the more vulnerable it will become to the effects of the wireless channel. This is a logical fact as a single error will result in far more data being corrupted than if a smaller modulation alphabet were to be used. To counter this effect, larger modulation schemes require the use of far more power when transmitted. This concept is illustrated in Figure 4.9 for several different modulation cardinalities, where the throughput remains constant and the rate at which errors are generated depends on each signal's power to noise ratio.

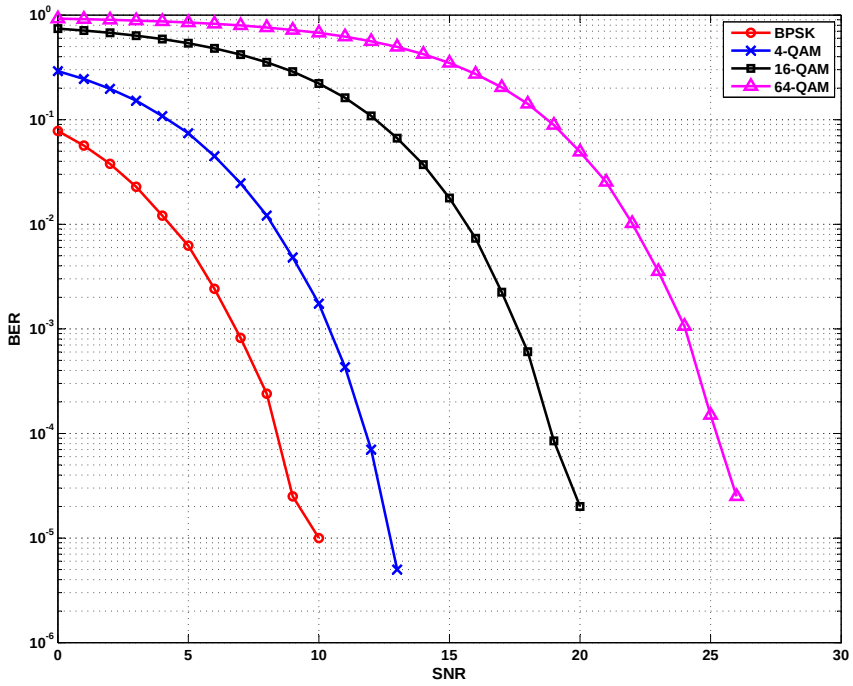

Figure 4.9: Effect of AWGN on different cardinalities of QAM

4.3.4 Virtual Subcarriers

When performing OFDM modulation, the majority of the subcarriers are used to carry data; however due to interference from systems using frequency spectrum neighbouring the OFDM system and to eliminate out-of-band interference resulting from insufficiently steep roll-offs in analogue anti-aliasing filters, a useful design technique is to place several null subcarriers on either side of the system's core bandwidth [16]. These null subcarriers contain no data and act as guard bands, protecting the data subcarriers from interference.

4.3.5 Synchronization

The sensitivity of OFDM based systems to synchronization errors makes it imperative that these errors be corrected before the received data is evaluated; however due to the extremely complex signal processing involved, it was considered impractical to implement a synchronization scheme in the simulations to be discussed in Chapter 5 and therefore during these simulations it was assumed that these systems are automatically synchronized.

Due to the importance of the concept of synchronization in OFDM systems, it would be

inappropriate if the basic concepts were not discussed in this report. Therefore the following section will examine a form of synchronization based on reference symbols in OFDM frames.

Reference Symbol Synchronization

There are numerous synchronization algorithms that could be used in an OFDM system; these make use of reference symbols, pilot tones, and some exploit the nature of the data being transmitted. The Reference Symbol Synchronization algorithm is based on material from [17], and makes use of a specific Reference Symbol placed at the start of an OFDM frame, preceded by a null symbol containing no data.

The reference symbol is specially constructed using consecutive copies of randomly generated signals known as synchronization patterns. The length of the reference symbol must equal that of all other OFDM symbols within the frame, but the number of consecutive synchronization patterns used is irrelevant. Figure 4.10 illustrates the construction of an OFDM Frame containing a null and reference symbols.



Figure 4.10: An OFDM Frame containing null and reference symbols. The reference symbol makes use of 4 synchronization patterns (SP).

The synchronization algorithm is responsible for determining the start of the OFDM frame and each OFDM symbol. The algorithm must also determine if a frequency error exists and must determine the size of the correction. To perform these measurements, the reference symbol synchronization algorithm makes use of two correlation functions which evaluate the data stream as it is received. These correlation functions can be seen in Equations 4.1 and 4.2.

$$
\begin{aligned}
&G(t) = \sum_{m=0}^{N_g} r(t-m).r(t-m-N)^* \\
&\text{where :} \\
&N - \text{Length of the Symbol} \\
&N_g - \text{ Length of the Guard Interval} \\
&r - \text{Receiver buffer containing the last several receiver values} \\
&t - \text{Index of the last received value in } r
\end{aligned}
\tag{4.1}
$$

$$
\begin{aligned}
&R(t) = \sum_{m=0}^{N+N_g-N_s-1} r(t-m).r(t-m-N_s)^* \\
&\text{where :} \\
&N - \text{Number of Subcarriers per OFDM Symbol} \\
&N_g - \text{Length of the Guard Interval} \\
&N_s - \text{Length of the Synchronization Pattern} \\
&r - \text{Receiver buffer containing the last several receiver values} \\
&t - \text{Index of the last received value in } r
\end{aligned}
\tag{4.2}
$$

Each of the two correlation functions are evaluated whenever a new data value is received and stored in the receiver buffer. The results from the functions over a period of time determine the start of each frame and OFDM symbol. Equation 4.2 provides the information needed to estimate the start of an OFDM frame and provides an initial timing estimate. Equation 4.1 provides information that indicates the start of each OFDM symbol, thereby allowing fine tuning of the initial timing estimate. Once the timing estimate has been used to synchronize the OFDM frames and symbols, the information from the two correlation functions can be used to determine if there is a frequency offset. Equations 4.3 and 4.4 generate an initial (δf_a) and fine (δf_t) estimate of the frequency offset. After the frequency offset has been estimated, a correction can be made and the resulting symbols can be demodulated to subcarriers using the IDFT or IFFT.

$$
\begin{aligned}
&\delta f_a = \tfrac{N}{N_s}\tfrac{\Delta f}{2\pi}.\angle R(t_{\max}) \\
&\text{where :} \\
&N - \text{Number of Subcarriers per OFDM Symbol} \\
&N_s - \text{Length of the Synchronization Pattern} \\
&\Delta f - \text{Length of Subcarrier Spacing} \\
&R(t_{max}) - \text{Start of each OFDM Frame} \\
&\angle - \text{The angle value of a complex number}
\end{aligned}
\tag{4.3}
$$

$$
\begin{aligned}
&\delta f_t = \tfrac{\Delta f}{2\pi}.\angle G(t_{\max}) \\
&\text{where :} \\
&\Delta f - \text{Length of Subcarrier Spacing} \\
&G(t_{max}) - \text{Start of each OFDM Symbol}
\end{aligned}
\tag{4.4}
$$

4.3.6 Channel Estimation and Equalization

The principle of channel estimation and equalization involves attempting to compensate for the effects of the wireless channel by manipulating the received data symbols based on an

estimate of the channel transfer function. There are numerous algorithms that can be used to perform channel estimation and equalization and different methods are more appropriate for OFDMA or MC-CDMA systems. The following sections will examine the algorithm that will be used in the simulations in Chapter 5 to estimate the channel transfer function and the equalization schemes which will be used for OFDMA and MC-CDMA systems.

Pilot Symbol-Assisted Channel Estimation

The effect of a frequency selective fading channel on an OFDM system is to attenuate certain subcarriers, thereby corrupting the information modulated onto those subcarriers. If an OFDM system has been designed correctly, it will eliminate the effects of all multipath interference and the only factors which will negatively influence the system's performance will be the frequency selective channel transfer function and noise. This fact is modeled in Equation 4.5 and describes some of the basic mathematics involved in channel estimation and correction [16].

$$\begin{aligned} &Rx(f) = Tx(f).H + n \\ &\text{where :} \\ &Rx(f) - \text{Spectrum of the Received Data Symbols} \\ &Tx(f) - \text{Spectrum of the Transmitted Data Symbols} \\ &H - \text{Channel Transfer Function} \\ &n - \text{Noise} \end{aligned} \tag{4.5}$$

Most channel estimation schemes make use of pilot symbols that are placed at specific locations in the time or frequency domain [2, 17]. By examining the effect of the wireless channel on each pilot symbol, the receiver can generate an estimate of the channel transfer function. The channel estimation algorithm selected for use in the simulations in Chapter 5 makes use of frequency domain pilot-symbols that are evenly interspersed amongst data bearing subcarriers. As the values of these pilot symbols are known to the receiver, the values of the received signals can be divided by the transmitted symbols thereby generating an initial estimate of the channel transfer function. The values of the channel transfer function between the pilot symbols are then determined using a linear interpolation algorithm.

While there are far more advanced channel estimation techniques available, this algorithm provides sufficient accuracy provided that enough pilot symbols are used. It also has the advantage of being highly computationally efficient and simple to implement. The disadvantage of this method is that it makes use of subcarriers that could otherwise have been

used to carry data; however this tradeoff is acceptable due to the fact that if channel estimation were not performed, the data on the subcarriers would suffer from interference.

Equalization in OFDMA Systems

Due to the fact that the effect of the channel transfer function on subcarriers carrying data can be represented by a simple multiplication (as seen in Equation 4.5), equalization in OFDMA systems is performed by means of a one-tap equalizer [2]. In other words each subcarrier is multiplied by the inverse of the estimated channel transfer function. This concept is represented by Equation 4.6.

$$
\begin{aligned}
&Tx(f) \approx Rx(f)_E = \tfrac{Rx(f)}{H} \\
&\text{where :} \\
&Tx(f) - \text{Spectrum of the Transmitted Data Symbols} \\
&Rx(f)_E - \text{Spectrum of the Received Data Symbols after Equalization} \\
&Rx(f) - \text{Spectrum of the Received Data Symbols} \\
&H - \text{Channel Transfer Function}
\end{aligned}
\tag{4.6}
$$

For a one tap equalizer the formula for the Channel Transfer Function can be generalized according to Equation 4.7.

$$
\begin{aligned}
&H = 1 - Ae^{j2\pi ft} \\
&\text{where :} \\
&H - \text{Channel Transfer Function} \\
&A - \text{Amplitude of the interference} \\
&f - \text{Frequency of the Transmitted Signal} \\
&t - \text{Delay Difference}
\end{aligned}
\tag{4.7}
$$

User Detection Schemes for MC-CDMA Systems

Channel equalization in MC-CDMA systems is far more complex than that which is used in OFDMA systems. Such forms of equalization are referred to as user detection schemes as they not only compensate for the effects of the frequency selective fading channel, but they also aid in reducing the effect of MAI [17]. There are two forms of user detection, namely single user detection (SUD) and multiple user detection (MUD). SUD schemes only make use of the information pertaining to a single user and are thus less accurate than

MUD schemes which examine the effect of MAI and the channel on all users' data. For the purposes of the simulations in Chapter 5, an advanced form of SUD known as Zero Forcing (ZF) equalization or Orthogonality Restoring Combining (ORC) was used. While the use of a MUD scheme might provide increased performance gains, the complex implementation required made it unfeasible to implement within the simulation.

The purpose of ZF Equalization is to restore the orthogonality of the subcarriers and the spreading codes which was destroyed by frequency selective fading [17]. Other SUD algorithms, such as Equal Gain Combining (EGC), can counter the effects of frequency selective channels but introduce additional MAI in the process. Equation 4.8 is used to generate a ZF Equalizer matrix which is multiplied with the received data symbols thereby eliminating the negative effects of the wireless channel.

$$\begin{aligned} & q_g = \frac{H_g^*}{|H_g|^2} \\ & \text{where :} \\ & q_g - \text{Equalization Coefficient for Data Symbol } g \\ & H_g - \text{Channel Transfer Function Symbol } g \end{aligned} \tag{4.8}$$

4.4 OFDMA and MC-CDMA as Candidate 4G Air-Interfaces

The development of a new 4G access network will require the design and implementation of a new air-interface architecture capable of meeting the 4G system requirements described in Chapter 3. Of all the available architectures proposed by researchers, it is commonly agreed that a new 4G air-interface architecture will probably be based on OFDM. Currently there are two primary multiple access schemes which make use of OFDM, namely OFDMA and MC-CDMA, and these can be combined with additional communications components such as coding, interleaving, digital modulation, synchronization and channel estimation and equalization.

The following chapter models each of these concepts, using specific parameters, so that their performance can be evaluated using computer simulations in order to determine which would be the most appropriate choice for a new 4G air-interface architecture.

Chapter 5

Simulation of Candidate Air-Interfaces

The air-interface comprises the physical layer of an access network and is largely responsible for the performance capabilities of the access network. To design a new 4G access network system based on the specifications outlined in Chapter 2, it is necessary to determine which of the two candidate air-interface architectures discussed in Chapter 4 performs best. The purpose of this chapter is to measure the performance of each of the architectures by means of computer simulations, using realistic models of the wireless channel and cellular environment.

The following sections will discuss the methodology used to measure the performance of each architecture, the assumptions made during the simulations, and the parameters used for the two sets of simulations employed to determine the relative performance of OFDMA and MC-CDMA as candidate 4G air-interface architectures.

5.1 Evaluating the Performance of Candidate 4G Air-Interfaces

Determining which of the two candidate air-interfaces is the best performing and therefore most appropriate choice for 4G systems requires that a series of simulations be conducted to ascertain their performance under realistic conditions. It is important that the two air-interfaces are compared using the same set of parameters so that an unbiased result is achieved.

The performance criteria used to evaluate OFDMA and MC-CDMA were chosen based on the core requirements for 4G systems and are listed below:

- **Data Throughput:** The average data throughput of a system will determine the types of services a user can access. Whilst the simulations of OFDMA and MC-CDMA are

not capable of providing the full throughput as specified by the 4G specifications, the measurements taken give an accurate indication of the potential throughput of each system. To increase the throughput of each system such that they meet the 4G access network system requirements, more advanced techniques such as multi-antennae technologies and adaptive modulation need to be used. These are discussed in greater detail in Chapter 7.

- **Spectral Efficiency:** Frequency spectrum is a limited resource and it is a requirement that 4G systems make more efficient use of the available spectrum than current systems do. Higher levels of spectral efficiency increase the capacity and throughput of access systems and are therefore a key indicator of system performance.

- **Coverage:** The amount of power needed to accurately transmit data determines the maximum possible coverage of an access system in a cellular environment. If a system is required to output high levels of power to transmit data at a specified throughput, then its cell size will be decreased, thereby introducing additional costs for mobile operators deploying 4G access networks.

The simulations were constructed in MATLAB due to the ease with which accurate mathematical models can be developed and simulated. Two simulations were constructed which measured the performance of OFDMA and MC-CDMA in a wireless channel and in a cellular environment. The following sections will examine the assumptions made for the simulations, the radio propagation environment and the parameters used for OFDMA and MC-CDMA for each of the two simulations.

5.2 Assumptions

When designing a simulation of a communications system, it is usually impractical to model every aspect of the physical implementation of the system due to the complexities involved and the computational processing power that would be required to run the simulations. Therefore, it is common practice to make assumptions when designing a simulation model in order to simplify the implementation and decrease the execution time. It is important to note that the use of these assumptions neither affect the accuracy nor the outcome of the simulations, which are designed to ascertain which of the two candidate air-interface architectures, OFDMA and MC-CDMA, represents the appropriate choice for 4G systems. The following is a list of the assumptions made during the simulations:

- **Perfect Synchronization:** No frequency or timing synchronization errors occur and

synchronization detection and correction do not need to be performed. This assumption is made to decrease the execution time of each simulation which would otherwise have been impractical.

- **Static Wireless Channel:** The transmitter and receiver are stationary and therefore no Doppler spread is generated. The primary reason for this assumption is that Doppler spread generates a frequency offset and as no synchronization algorithms are used, it would severely decrease the performance of the system.

- **Non Line of Sight Propagation:** The deployment of a new high performance 4G system would likely occur in major urban environments where users would make use of the increased throughput capabilities. Such environments introduce extremely hostile channel conditions, where line of sight between the transmitter and receiver is highly unlikely. Therefore it is appropriate to test both architectures in this form of environment.

- **Linear Amplification:** The use of linear amplification eliminates the presence of clipping and interference resulting from non-linear amplification of signals with high PAPR.

- **Perfect Power Control:** Spread spectrum systems suffer from the effect of the near-far problem where signals from users close to the base station interfere with users' signals transmitted from far away from the base station. Perfect power control corrects this problem by regulating the power of each user's transmitter.

5.3 Radio Propagation

The purpose of any wireless communications system is to eliminate the effects of the wireless channel so that data transmitted through the channel can be received with minimal or no errors. Modeling the behavior of wireless channels is extremely complex, however models have been developed which approximate specific components. The wireless channel model used for the simulations takes into account the effects of noise, multipath fading (also known as fast fading), path loss propagation and shadowing (also known as slow fading). The following sections will examine each of these components and will explain how they are used in the simulations.

5.3.1 Noise

Noise in communications channels refers to the addition of white noise resulting from various sources within the natural environment. Noise is typically modeled as white noise with a constant power and a Gaussian amplitude distribution. This model is referred to as Additive White Gaussian Noise (AWGN) and, provided that an OFDM based system is designed correctly, will constitute the main source of interference in the wireless channel [17].

5.3.2 Multipath Fading Channels

Multipath fading, also known as fast fading, is the result of the reflection, scattering and refraction of transmitted signals against objects located within the wireless channel environment [16]. The result of multipath fading is that several copies of the transmitted wave, each with its own attenuations and delays, are received and viewed by the receiving system as a single signal. The effects of multipath propagation have already been discussed at length during the past few chapters, including its capacity to induce attenuations at specific frequencies and to introduce ICI and ISI if not compensated for correctly.

Modeling multipath fading in non-line of sight wireless channels is achieved by means of a channel impulse response representing the delays of each of the copies of the transmitted signal and a Rayleigh distribution function which models the random nature of the changes in attenuation and phase changes of each transmitted signal [16]. The model selected for use in the simulation consists of 10 impulses, spaced 10 ns apart and an exponential power distribution with a 1 dB decrease per impulse. This model's parameters are similar to those defined in the Cost 231 Bad Urban model, but represent a far harsher indoor environment where the effects of multipath fading are maximized [16].

5.3.3 Path Loss

Path Loss refers to the attenuation of a transmitted signal as it moves away from the base station. Path Loss is usually modeled as a power law function, where the power of the function is dependent on the environment being modeled [7]. In outdoor environments the power can be as low as 2 and in indoor environments it can vary between 4 and 6.

5.3.4 Shadowing

Shadowing, also referred to as slow fading, is the result of the transmitted signal being attenuated due to the presence over long distances of large objects such as buildings or mountains. The difference between shadowing and fast fading is that the signal must travel larger distance for any major levels of attenuation to occur. Shadowing is modeled with a random variable generated by means of a log-normal distribution, a zero mean and a standard deviation specified by the transmission environment [7].

5.4 Comparison of OFDMA and MC-CDMA systems in a realistic wireless channel

This first simulation compares the performance of OFDMA and MC-CDMA in the presence of AWGN after passing through a multipath fading channel. The purpose of the simulation is to measure the performance of each system without taking into account path loss or shadowing. The simulation gives a preliminary indication as to the relative performance of the systems, the number of users they could support and the total system throughput. Figure 5.1 provides an illustration of the simulation architecture.

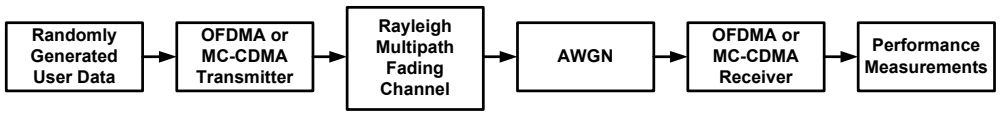

Figure 5.1: Architecture of the simulation to compare OFDMA and MC-CDMA systems in a realistic wireless channel

The parameters used during the simulation can be divided into static parameters and dynamic parameters. Static parameters define the architecture of the system and remain fixed for all simulations; these can be seen in Table 5.1.

The air-interface static parameters for these simulations were chosen based on the design for general purpose OFDMA and MC-CDMA air-interface systems, capable of operating favorably in most wireless environments. To aid in understanding how OFDM Frames were constructed, Figure 5.2 illustrates how each of the relevant static parameters were combined to form an OFDM Frame. The wireless environment static parameters were selected based on an indoor non-line of sight wireless propagation model, which is considered to be one of the harshest forms of radio channels and was therefore considered to represent a worst case scenario for simulation purposes.

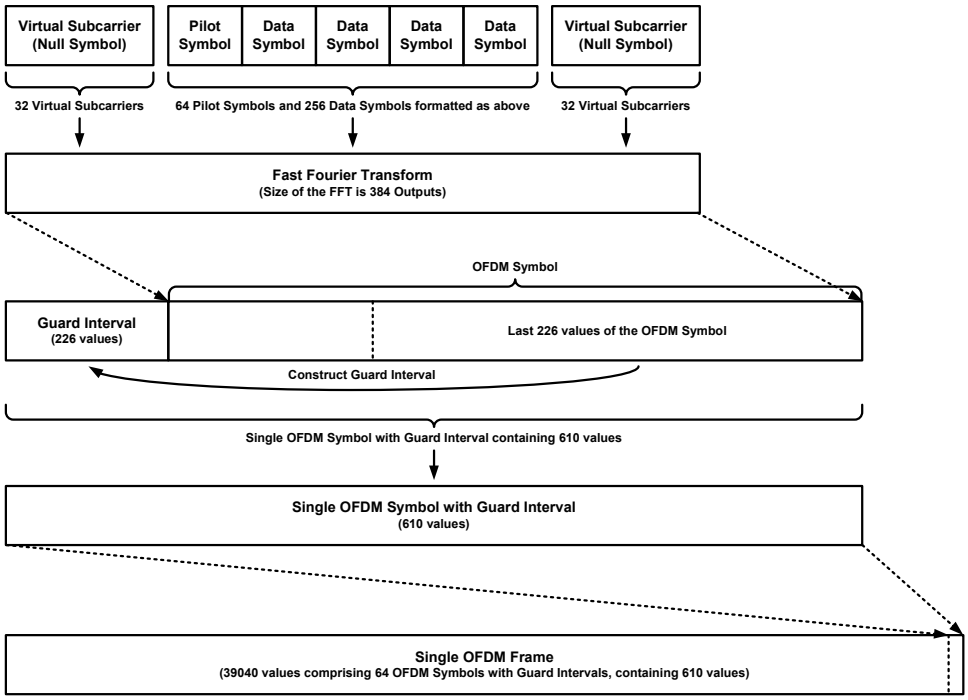

Figure 5.2: Illustration of the method used to construct an OFDM Frame for use in the simulations.

Static Parameters	Values
Channel Coding	Convolutional Coding
Coding Rate	$\frac{1}{2}$
Modulation Scheme	QAM
No. Data Subcarriers	256
No. Pilot Subcarriers	64
No. Virtual Subcarriers	64
Size of the FFT	384
Guard Length Samples	226
No. OFDM Symbols per Frame	64
Subcarrier Spacing	100 kHz
Bandwidth	38.4 MHz
OFDM Symbol Period	10 μs
OFDM Frame Period	1 ms
No. Impulses for Multipath Fading	10
Path Delays for Multipath Fading	10 ns
Power Decrease per Delay for Multipath Fading	1 dB

Table 5.1: Static parameters for the simulation comparing OFDMA and MC-CDMA performance in a realistic wireless channel

The purpose of these simulations was to determine which of the two architectures is the more appropriate choice as a 4G air-interface architecture and therefore parameters which have the same effect on the performance of both systems were not varied as they could not affect the outcomes of this investigation. Examples of such parameters include: the channel coding rate, the physical construction of the OFDM frame, the length of the Guard Interval (which was made longer than absolutely necessary in order to accommodate multiple environments in future simulations) and various wireless propagation properties.

Dynamic parameters were adjusted after each simulation and were used to determine the performance of the systems under different operating conditions; these can be seen in Table 5.2. The choice of dynamic parameter values were motivated by the need to test both systems under extreme operating conditions.

After each simulation was executed, a series of performance measurements were taken using the list from section 5.1 as a guide. These measurements assist in determining which system will become the appropriate choice for the air-interface in a new 4G access network. The analysis of these measurements is performed in the following chapter.

Dynamic Parameters	Values
Modulation Alphabet	16 or 64
No. of Users	1 or 8
Spreading Code Length	8 or 32
No. Substreams per User: OFDMA	always 32
No. Substreams per User: MC-CDMA	32 or 8 (depends on code length)
Signal to Noise Ratio	0 to 20 dB

Table 5.2: Dynamic parameters for the simulation comparing OFDMA and MC-CDMA performance in a realistic wireless channel

5.5 Comparison of OFDMA and MC-CDMA Systems in a cellular environment

The results of the first simulation provide a preliminary indication of the performance of each of the air-interface candidate systems. To accurately compare their behaviour, it is necessary to test their capabilities in a cellular structure similar to the environment within which the new 4G access network will operate. The cellular propagation model is based on material from [3, 4] and contains seven cells. Each cell is modeled using a hexagon with the primary base station at the center and six base stations surrounding it. A normalized cell radius of one is assumed. The available bandwidth is split using a re-use pattern of three, and the performance measurements are based on the transmission between the primary base station and a mobile terminal located somewhere within the primary cell. Figure 5.3 provides an example of the cellular environment.

This simulation is different from the initial one as it takes into account the effects of path loss, shadowing and interference generated by neighboring cells' base stations. The simulation methodology is as follows:

1. Each base station generates a signal, based on randomly generated user data and modulated using one of the air-interface architectures according to a set of static and dynamic parameters.
2. Each signal is passed through a Rayleigh Fading Channel based on static parameters as discussed below
3. The energy of each signal received by the mobile terminal is calculated based on Equation 5.1.

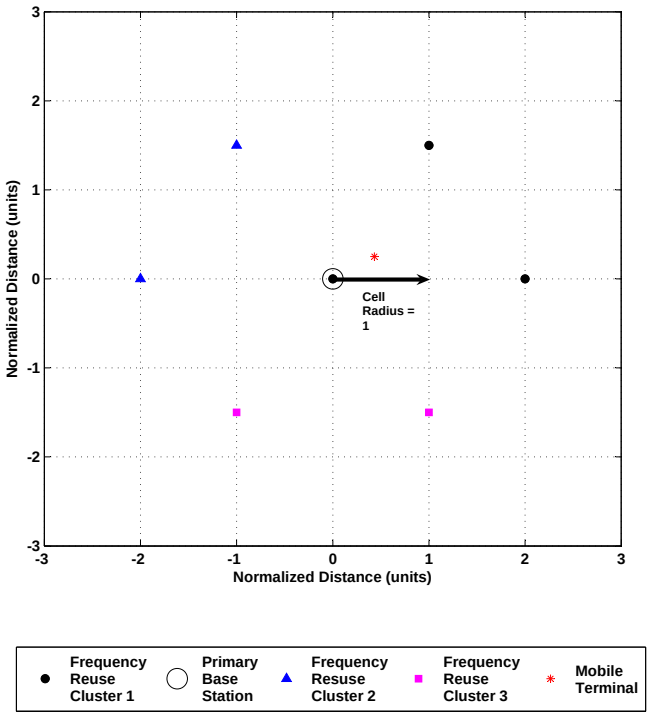

Figure 5.3: The cellular environment used to conduct simulations to compare OFDMA and MC-CDMA

$$
\begin{aligned}
&E_{r,j} = E_{t,j}.d_j^{-\gamma}.10^{\frac{n_j}{10}} \\
&\text{where :} \\
&E_{r,j} - \text{Received Energy from Base Station } j \\
&E_{t,j} - \text{Transmitted Energy from Base Station } j \\
&d_j - \text{Distance between Base Station } j \text{ and Mobile Terminal} \\
&\gamma - \text{Path Loss Decay Factor} \\
&n_j - \text{Log} - \text{normal Randomly Generated Shadowing Factor}
\end{aligned}
\tag{5.1}
$$

While the equation does require that the transmission energy for each base station is specified, provided that all base stations transmit with the same power; this parameter will cancel out and become irrelevant.

4. The ratio between the energy received from each of the interfering base stations and the primary base station is calculated. This ratio can then be used to attenuate the interfering signals based on their relative distance from the mobile terminal and the effect of shadowing. Equation 5.2 is used to attenuate each of the interfering signals before they are combined with each other and the primary base station signal.

$$
\begin{aligned}
&T_a = T_i \cdot \sqrt{\frac{E_{r,j}}{E_{r,p}}} \\
&\text{where :} \\
&T_a - \text{Attenuated Transmitted Signal} \\
&T_i - \text{Initial Transmitted Signal} \\
&E_{r,j} - \text{Received Energy from Interfering BaseStation } j \\
&E_{r,p} - \text{Received Energy from the Primary BaseStation}
\end{aligned}
\tag{5.2}
$$

5. Lastly, AWGN is added to the combined signal and the receiver air-interface architecture attempts to demodulate the transmitted data accurately. A diagram illustrating this process is shown in Figure 5.4.

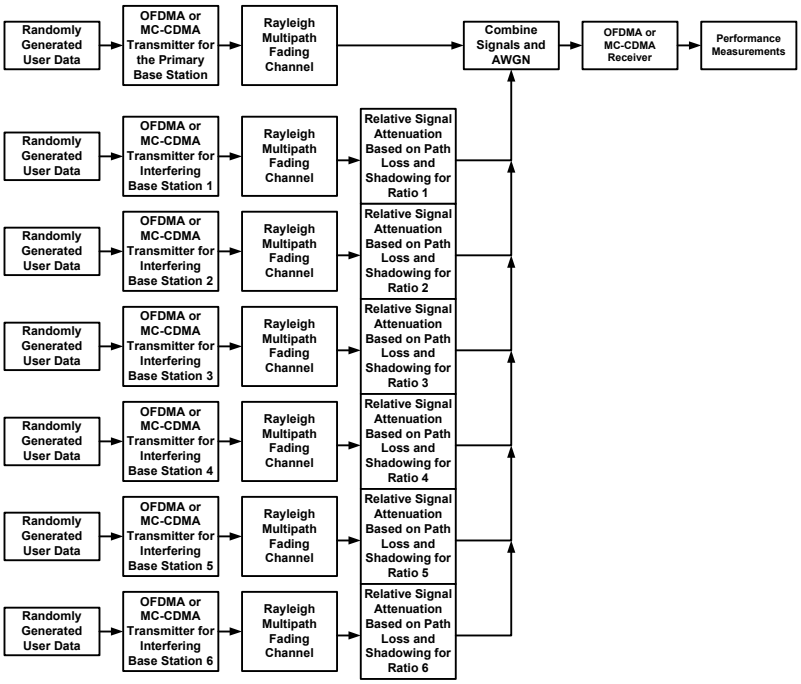

Figure 5.4: Architecture of the simulation to compare OFDMA and MC-CDMA systems in a cellular environment, based on material found in [3, 4]

As was the case in the first simulation, the parameters used in the cellular simulation can be divided into static and dynamic parameters. The static parameters used in the simulation can be seen in Table 5.3 and the dynamic parameters can be seen in Table 5.4. It should be noted that the allocation of spectrum between different cells is performed by allocating certain subcarriers to each cell for transmission. This increases the system's bandwidth by the size of the reuse factor, in this case three, increasing the total number of subcarriers to 1024. The method of construction of OFDM Frames used in the first simulation is identical to the method used here.

Static Parameters	Values
Channel Coding	Convolutional Coding
Coding Rate	$\frac{1}{2}$
Modulation Scheme	QAM
Modulation Alphabet	16
No. Data Subcarriers (per cell)	256
No. Pilot Subcarriers (per cell)	64
No. Virtual Subcarriers	64
Size of the FFT	1024
Guard Length Samples	226
No. OFDM Symbols per Frame	64
Subcarrier Spacing	100 kHz
Bandwidth	102.4 MHz
OFDM Symbol Period	10 μs
OFDM Frame Period	1 ms
No. Impulses for Multipath Fading	10
Path Delays for Multipath Fading	10 ns
Power Decrease per Delay for Multipath Fading	1 dB
Cellular Re-use pattern	3
Angle of Mobile Terminal Relative to Primary Base Station	30°
Standard Distribution of Log-normal Shadowing	8
Path Loss Decay Factor	4

Table 5.3: Static parameters for the simulation comparing OFDMA and MC-CDMA performance in a cellular environment

Dynamic Parameters	Values
No. of Users	1 or 8
Spreading Code Length	8
No. Substreams per User: OFDMA	always 32
No. Substreams per User: MC-CDMA	always 32
Signal to Noise Ratio	0 to 20 dB
Distance from Primary Base Station to Mobile Terminal	0.1 or 1 units

Table 5.4: Dynamic parameters for the simulation comparing OFDMA and MC-CDMA performance in a cellular environment

After each simulation was executed, the same set of performance measurements that were taken for the first simulation were repeated and is analyzed in the following chapter, in order to determine the appropriate choice for the air-interface in a new 4G access network.

Chapter 6

Determining the Most Appropriate 4G Air-Interface Architecture

The new 4G access network will require a high performance air-interface capable of meeting the requirements discussed in Chapter 2. The previous chapter outlined two sets of simulations designed to determine which of the two candidate air-interface architectures, namely OFDMA or MC-CDMA, will be most appropriate for a new 4G system. The following sections analyze the results of each of those simulations and make a recommendation as to which air-interface would be an appropriate choice as a 4G air-interface architecture.

6.1 Analysis of OFDMA and MC-CDMA Systems in a realistic wireless channel

The purpose of the first simulation was to test the performance of OFDMA and MC-CDMA in a realistic wireless environment. The simulation made use of AWGN and Rayleigh multipath fading as the primary sources of interference. Several sets of simulations were run and various parameters were changed each time in order to test the performance of the architectures under different operating conditions.

The first set of measurements taken was used to determine each architecture's performance based on the cardinality of the digital modulation scheme. The number of users transmitting data was 1 and each system could accommodate up to 8 users. The number of available subcarriers for each system was fixed at 256, which meant that each user could generate enough data to fill 32 substreams per OFDM symbol. Figure 6.1 illustrates the bit error ratio (BER) versus signal to noise ratio (SNR) performance of each system, when 16-QAM and 64-QAM digital modulation were used. As can be seen, the higher the modulation cardinality, the greater the power of the transmitted signal required to achieve a higher resilience to

errors. Due to the various error correction schemes incorporated in both architectures, the primary source of interference is AWGN, and in order to decrease the interference generated by the AWGN the power of the transmitted signal must be increased. These initial measurements also prove each system's resilience to other forms of interference such as multipath fading, and show that each of the components, such as channel estimation and correction, channel coding, interleaving and so on are working correctly.

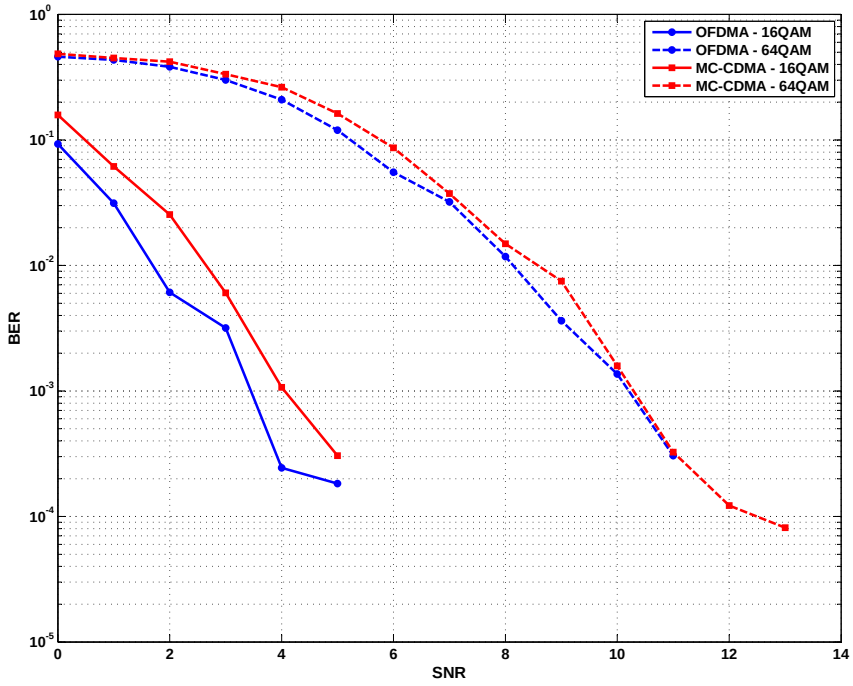

Figure 6.1: Performance comparison of OFDMA and MC-CDMA systems in a realistic wireless environment, with 1 user, a code length of 8 and using 16-QAM and 64-QAM

The results of these first measurements can be used to perform initial calculations which aid in determining the performance of each system. The maximum attainable total throughput and the throughput per individual user can be calculated based on the cardinality of the modulation schemes used. The spectral efficiency of each system is calculated based on the subcarrier spacing and the number of subcarriers used to carry data. Both of these performance calculations are displayed in Table 6.1. Due to the limitations of the simulation environment these performance measurements do not fully meet the requirements of 4G systems; however they do provide an indication of the performance of each system. Increasing the number of subcarriers, increasing the cardinality of the modulation schemes and the accuracy of the interference cancellation algorithms are all potential ways of increasing the performance of each system.

Performance Measurements	**Modulation Cardinality**	**OFDMA**	**MC-CDMA**
Total Throughput	16-QAM	32.23 Mbps	32.23 Mbps
Total Throughput	64-QAM	48.84 Mbps	48.84 Mbps
Throughput per User	16-QAM	4.03 Mbps	4.03 Mbps
Throughput per User	64-QAM	6.04 Mbps	6.04 Mbps
Spectral Efficiency	16-QAM	0.84 bits/s/Hz	0.84 bits/s/Hz
Spectral Efficiency	64-QAM	1.26 bits/s/Hz	1.26 bits/s/Hz

Table 6.1: Performance measurements of OFDMA and MC-CDMA systems in a realistic wireless environment, with 1 user and a code length of 8

Determining the throughput performance measurements seen in Table 6.1 was performed using Equation 6.1. As both simulations made use of the same number of data subcarriers, the throughput of both systems is identical. The results were calculated for a "best case scenario", in other words these performance levels would only be achieved in an optimum scenario.

$$\begin{aligned} &\text{Total Throughput} = \frac{N_s . \log_2(\alpha) . F_{Code}}{T_{Symbol}} \\ &\text{Where :} \\ &N_s - \text{Number of Data Subcarriers} \\ &\alpha - \text{Cardinality of the Digital Modulation} \\ &F_{Code} - \text{Code Rate of Channel Coding} \\ &T_{Symbol} - \text{Period of the Symbol} \end{aligned} \tag{6.1}$$

Calculation of the throughput received by each user, is achieved by dividing the total throughput by the number of users; in this case eight. To determine the spectral efficiency of each system, the total throughput is divided by the bandwidth of the system, this is illustrated in Equation 6.2.

$$\begin{aligned} &\text{Spectral Efficiency} = \frac{\text{TotalThroughput}}{F_B} \\ &\text{Where :} \\ &F_B - \text{System Bandwidth} \end{aligned} \tag{6.2}$$

An interesting observation when viewing the initial results in Figure 6.1 is that the transmitted signal power required to achieve maximum throughput for OFDMA is far lower than the signal power required for MC-CDMA. This discrepancy can be explained by examining the resource allocation scheme for each of the simulations. The maximum number of users an MC-CDMA system can accommodate is equal to the length of its spreading code. All

spread spectrum systems suffer from a form of self-interference known as Multiple Access Interference (MAI). This fact and its implications have already been discussed in previous chapters; however it is relevant in the context of these simulation results as it appears that in the absence of any additional interference compared to the OFDMA system, MAI provides the only possible reason for the discrepancy in the expected performance of the system. To prove this theory a second set of measurements were taken from simulations conducted on both OFDMA and MC-CDMA; as described below, these measurements served to support this hypothesis.

To prove that MAI is the cause of the decrease in the MC-CDMA system's performance compared to OFDMA, the length of the spreading code was increased to 32. Figure 6.2 illustrates the performance of the OFDMA and MC-CDMA systems under these new conditions. The second set of measurements prove that the performance of MC-CDMA can be decreased due to the presence of MAI, as the MC-CDMA system easily outperforms the OFDMA system. Unfortunately, due to the architecture of the MC-CDMA system, increasing the length of the spreading code also decreases the number of substreams available to each user, resulting in reduced throughput per user. This concept is illustrated in Table 6.2 which relates the throughput per user with the length of the spreading code and compares it to the performance of OFDMA systems.

System Parameters			**Performance Parameters**	
Spreading Code Length	**Substreams per User**		**Throughput per User**	
MC-CDMA	**OFDMA**	**MC-CDMA**	**OFDMA**	**MC-CDMA**
8	32	32	7.86 Mbps	7.86 Mbps
32	32	8	7.86 Mbps	1.97 Mbps

Table 6.2: Performance measurements of OFDMA and MC-CDMA systems in a realistic wireless environment, with 1 user and a variable code length

A potential solution to this reduction in user throughput is to assign each user more than one spreading code. Figure 6.3 illustrates the performance of OFDMA and MC-CDMA where the number of users is increased to 8 and the spreading code length is 32. The performance of this system is similar to that of Figure 6.1, where the ratio between the number of users and the spreading code is much larger. This effectively proves that the MC-CDMA system suffers from MAI which is dependent on the ratio between the number of users and the spreading code length. It also proves that increasing the number of spreading codes available to users does not resolve the problem of reduced user throughput created by the spreading code length having to be increased to avoid MAI. These last set of measurements also prove that an OFDMA system is capable of supporting more users and at a higher throughput per user than an MC-CDMA system.

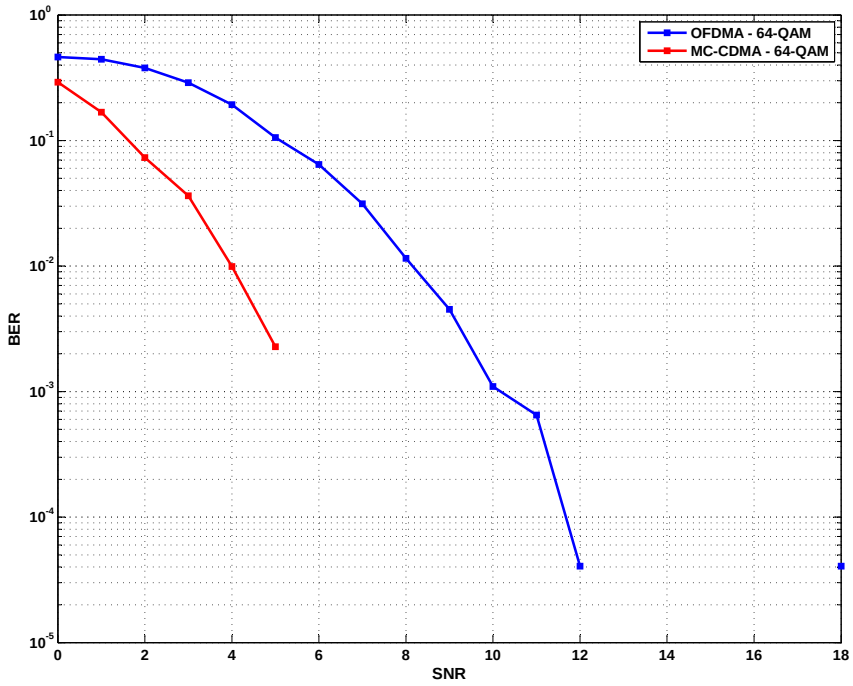

Figure 6.2: Performance comparison of OFDMA and MC-CDMA systems in a realistic wireless environment, with 1 user, a code length of 32 using 64-QAM

6.2 Analysis of OFDMA and MC-CDMA Systems in a cellular environment

The previous simulation tested the performance of OFDMA and MC-CDMA in a wireless environment, but did not take into account the effect of path loss, shadowing or interference generated by neighboring cells. As a new 4G access network will be expected to cope with these sources of interference in addition to those used in the previous simulation, the measurements taken for the second simulation provide a more accurate and complete picture of the performance of OFDMA and MC-CDMA under different operating conditions. As with the first simulation, a set of simulations were performed and after each simulation certain parameters were changed to determine their effect on the two systems.

The first set of measurements taken for this simulation were used to determine each architecture's performance based on the cardinality of the digital modulation scheme within a cellular environment. The parameters used were the same as those from the first set of measurements conducted in the previous simulation, namely, the number of users transmitting data was 1, the maximum number of users was 8 users, the number of available subcarriers

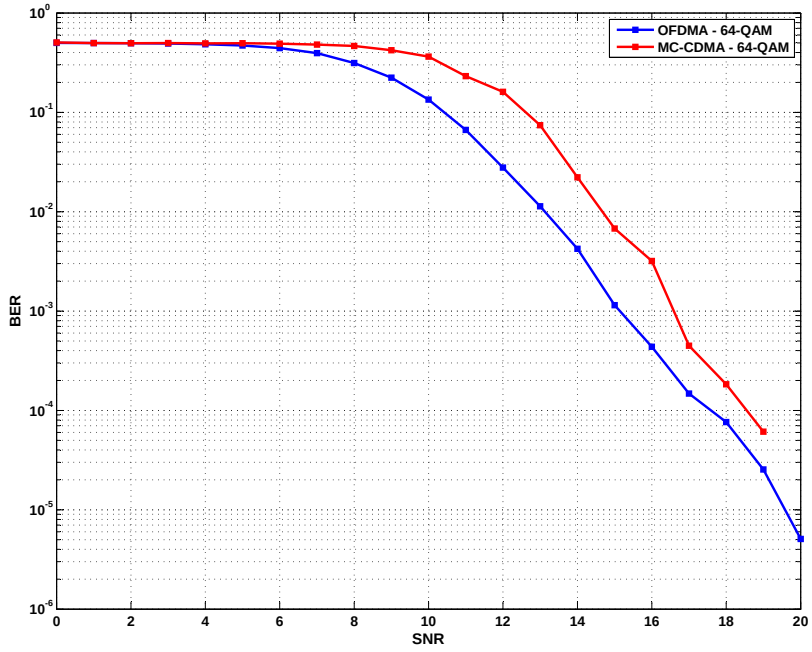

Figure 6.3: Performance comparison of OFDMA and MC-CDMA systems in a realistic wireless environment, with 8 users, a code length of 32 using 64-QAM

per cell was 256, and the number of substreams per user was 32. Figure 6.4 illustrates the bit error ratio (BER) versus signal to noise ratio (SNR) performance of each system when 64-QAM is used and the mobile terminal is positioned close to the primary base station. The results displayed in the diagram are similar to the performance of the systems during the first set of measurements taken during the previous simulation. This indicates that the conclusions reached based on the first measurements from the previous simulation are correct, i.e. the systems are operating correctly as AWGN is the only form of interference and MC-CDMA outperforms OFDMA due to the presence of MAI.

It is also apparent that the effects of path loss, shadowing and inter-cell interference have a slight detrimental effect on both systems, but as both systems make use of OFDM modulation and other interference canceling schemes, interference generated by subcarriers used by other cells appears to be largely eliminated. To determine if this theory is correct, a second set of measurements were taken, with the mobile terminal repositioned at the edge of the cell where maximum inter-cell interference occurs. Figure 6.5 illustrates the performance of both systems under these conditions and indicates that while their performance has deteriorated, the effect is most likely to be attributable to path loss and shadowing rather than inter-cell interference which would generate a much larger decrease in performance as ICI.

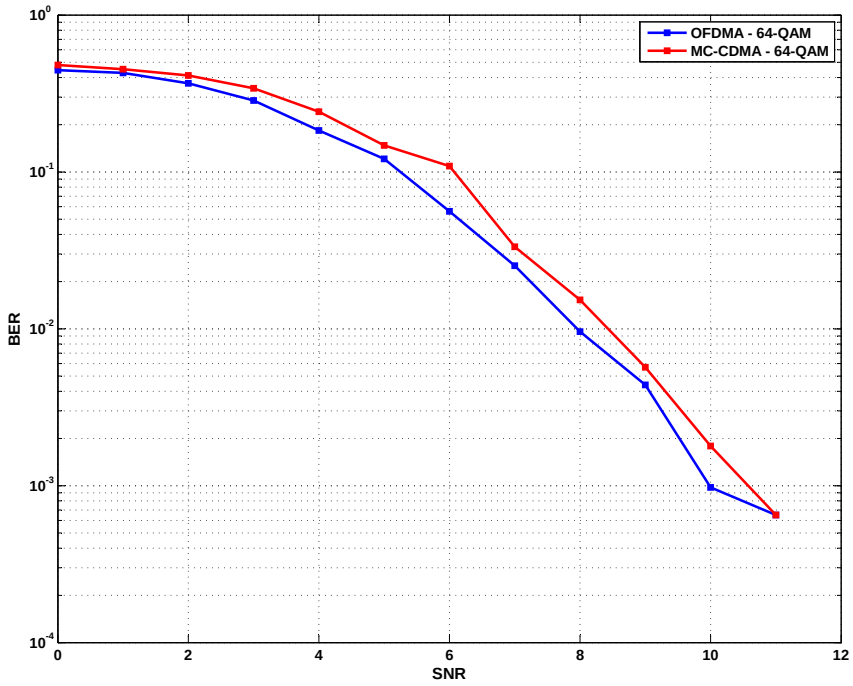

Figure 6.4: Performance comparison of OFDMA and MC-CDMA systems in a cellular environment, with 1 user, a code length of 8 using 64-QAM, where the mobile terminal is positioned close to the primary base station

The final measurements taken were used to determine the performance of both systems under extremely hostile channel conditions. The number of users transmitting data was 8, the length of the spreading code was 8 and the mobile terminal was positioned at the edge of the cell where the effects of inter-cell interference and path loss are maximized. Figure 6.6 provides the performance analysis of these measurements, where OFDMA significantly outperforms MC-CDMA due to its resistance to the effects of MAI. The maximum attainable throughput and spectral efficiency were exactly the same as the values stated in the first simulation, as all static parameters were maintained throughout both simulations.

6.3 The Most Appropriate 4G Air-Interface Architecture

The results from the two simulations show conclusively that OFDMA is superior to MC-CDMA and of the two considered it would be best suited as the optimum air-interface architecture for a new 4G access network. Whilst certain aspects of the OFDMA system's superior performance were discussed in the previous two sections, it is useful to summarize

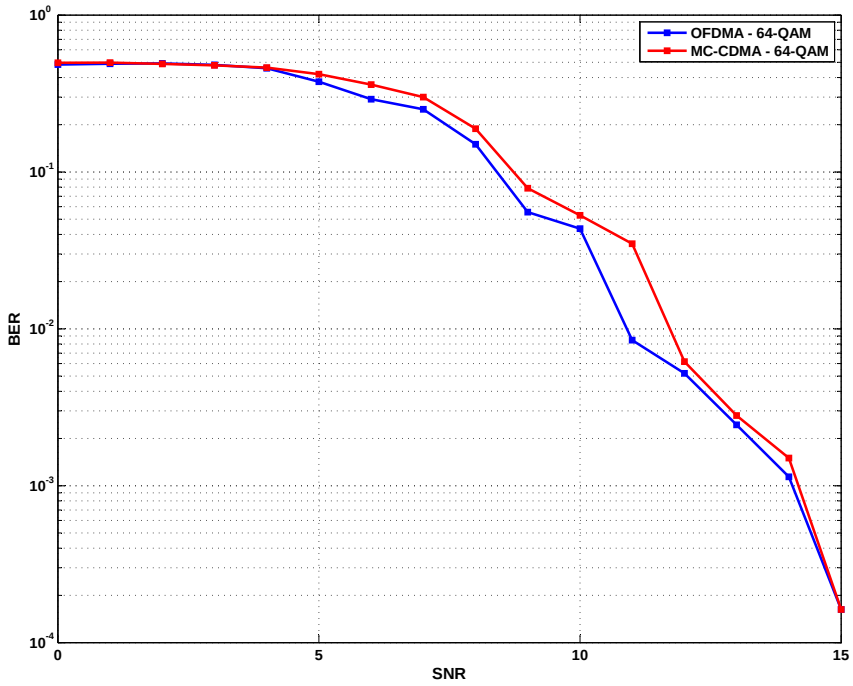

Figure 6.5: Performance comparison of OFDMA and MC-CDMA systems in a cellular environment, with 1 user, a code length of 8 using 64-QAM, where the mobile terminal is positioned at the edge of the primary cell

the strengths of OFDMA, in comparison to MC-CDMA, based on the performance criteria outlined in the previous chapter:

- **Throughput:** OFDMA can achieve much higher bit rates within a specific bandwidth than MC-CDMA. Due to the effects of MAI, MC-CDMA cannot allocate all spreading codes for use; therefore OFDMA is able to accommodate far more users than MC-CDMA. OFDMA systems also have the added benefit that the amount of throughput allocated to each user can be manipulated subject to the resource demands of the services provided.

- **Spectral Efficiency:** OFDMA make full use of the spectrum allocated and assign every subcarrier to a user. MC-CDMA systems are unable to transmit the same amount of data as they are limited by MAI. Therefore OFDMA systems are more spectrally efficient.

- **Coverage:** OFDMA systems require less power to provide high throughput rates. Only in instances where the code length is dramatically increased does MC-CDMA

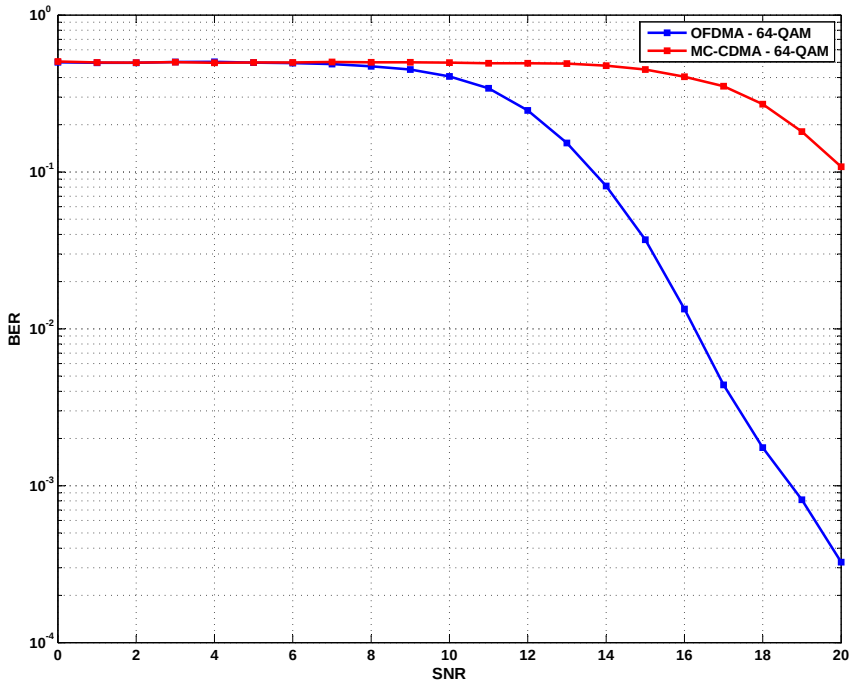

Figure 6.6: Performance comparison of OFDMA and MC-CDMA systems in a cellular environment, with 8 users, a code length of 8 using 64-QAM, where the mobile terminal is positioned at the edge of the primary cell

require less power to transmit data coherently. Under these conditions OFDMA systems are the better choice as they require less power to transmit high throughput services, indicating that they have the potential to cover a wider cell area. The spectrum for a new 4G access network has also not been allocated; however it is widely believed that the carrier frequency spectrum range will be substantially higher than existing systems. This will increase the amount of power required to transmit a signal and so any architecture which provides lower power transmission rates will be of significant benefit.

It is impossible to determine the exact requirements for a new 4G access network, however the simulations conducted in this report prove the greater potential of OFDMA as a candidate air-interface architecture due to its high throughput, high coverage, flexibility in allocation of resources, simplicity to implement, and resilience to interference. Due to practical limitations in the design of the simulation the results of the simulations do not precisely align with the design specifications initially outlined; however they do prove that as a basic architecture OFDMA is vastly superior to MC-CDMA, and the simulations could be

adapted to meet those requirements by adjusting certain system parameters, such as increasing the number of subcarriers or the accuracy of the interference cancellation algorithms, or decreasing the subcarrier spacing.

Chapter 7

Conclusion

Currently there is no unified definition nor is there any united standardization movement working towards the development of the next generation of mobile communications systems, to be known as the Fourth Generation or 4G. The purpose of this report was to aid researchers through the consolidation of the various views and objectives regarding 4G systems into a single objective definition of 4G and through the evaluation of the two primary candidate air-interface architectures, one of which could form the core component of a new 4G access network.

The following three sections examine the work covered in previous chapters, whether the results of the simulations and the analysis thereof met the objectives outlined in the problem statement, and proposals for future research within this field.

7.1 Summary of Report Material

In general, there are two separate schools of thought as to the method which should be used to develop 4G systems. The first group of researchers and organizations believes that the development of 4G systems should involve the evolution and convergence of existing cellular, IT and broadcasting communications systems into a single monolithic heterogeneous network capable of supporting both current and new services yet to be developed. The second group of researchers believe that due to the limitations of current access systems, a new 4G access network must be developed to support the requirements of new advanced and as yet undeveloped services.

A key objective of this report was to provide an objective definition of 4G systems based on the requirements of users and types of services that are most likely to exist. This definition combines the views of both groups of researchers and states that the new 4G network will

consist of both evolved and converged access networks, coexisting with a new 4G access network, and connected via an IP-based core network. The purpose of 4G systems will be to enable users to connect to the most appropriate access network, which will provide their requested service at the lowest possible cost and at the highest possible quality.

The development of a new 4G access network will require an air-interface capable of supporting the requirements of future services. According to the ITU, which envisages that such systems will be launched between 2010 and 2015, the appropriate air-interface specifications are that the throughput should be 100 Mbps for mobile connections and 1 Gbps for nomadic connections, and spectral efficiency should be as high as possible.

Orthogonal Frequency Division Multiplexing (OFDM) modulation enables the development of high performance air-interfaces capable of meeting the demanding requirements of new 4G access networks. There are two primary air-interface architectures which make use of OFDM modulation, namely OFDMA and and MC-CDMA. OFDMA provides users' access capabilities by allocating specific subcarriers to each user depending on their service requirements. MC-CDMA is a spread spectrum technique which spreads the data from each user over the number of available subcarriers.

7.2 Analysis of Solution

The purpose of this report was to advance 4G research via the development of an objective definition of 4G systems and then using this definition to evaluate the performance of two candidate 4G air-interface architectures, to enable a recommendation to be made as to which of the two architectures is the most appropriate choice for a 4G access network.

Simulations were conducted using realistic models of a wireless environment. The results of those simulations demonstrate that OFDMA is the best performing choice for a 4G air-interface architecture as it does not suffer from the effects of multiple access interference, which is a weakness of spread spectrum technologies. While the performance measurements of both architectures did not fully meet the requirements of 4G systems, the simulation results did indicate that with further development, both systems would be more than capable of meeting the required performance criteria.

In conclusion, this report contributes to the field of 4G research by generating an objective definition of 4G systems and by making a concrete recommendation as to which of the air-interface architectures would be the preferred choice for a new 4G access network, namely Orthogonal Frequency Division Multiple Access (OFDMA). It therefore meets all of the objectives outlined in the Problem Statement.

7.3 Complementary Technologies for Improving 4G Air-Interface Performance

Due to the current status of 4G development, with different organizations and individual researchers having formed their own opinions regarding the nature of 4G, numerous new and advanced technologies have emerged which can be used to improve the performance of existing air-interface systems. These technologies could become vital to improving the performance of potential 4G air-interface architectures so that they meet the ever increasing service expectations of users. While there are far too many emerging technologies to be discussed here, the following sections briefly examine three new technologies which could complement OFDMA and MC-CDMA systems and improve their performance. As these techniques have not been employed in the simulations in the previous chapter, primarily due to their complexity, research into the effects of these techniques on the performance of both air-interface architectures could be the subject of future research.

7.3.1 Radio Resource Management

Mobile communication users are constantly demanding access to more resources so that they can satisfy their requirements for new and advanced services. Increasingly this task is becoming more difficult due to the limitations of existing communication systems and the technologies they are based on. This was cited in Chapter 2 as a reason for the convergence of existing access networks and the development of new systems for a new monolithic heterogeneous 4G network. However, even if such a system is realized, management of the available network resources must be performed such that the maximum numbers of users have access to their desired services at the appropriate quality levels.

Radio Resource Management (RRM) systems refer to a new concept whereby algorithms and software applications are developed to manage the allocation of network resources under dynamic channel and traffic conditions such that the number of users receiving adequate service provision is maximized [5]. There are numerous different types of algorithms developed by different researchers and organizations, and each uses different methodologies and algorithms to measure and control the performance of communications systems.

The performance measurement of the two 4G air-interface candidate architectures discussed in the previous chapter provided an insight into the potential capabilities of these systems. However as stated already the systems did not perform fully to the specifications outlined in Chapter 2. RRM algorithms could be used to increase the performance of both systems through the control of different parameters, including the number of data subcarriers, the

number of channel estimation pilots, the size of the subcarrier spacing (only if Software Defined Radios were used), the cardinality of specific subcarriers based on their performance (also known as adaptive modulation), the allocation of specific subcarriers to neighboring cells, the parameters of the detection schemes used to reduce MAI, and so on [5, 16, 17].

An interesting use of RRM algorithms in potential 4G systems is illustrated in the development of NTT DoCoMo's Orthogonal Variable Spreading Factor (OVSF) based 4G air-interface. This candidate air-interface is based on both MC-CDMA and OFDMA architectures, and modifies the behavior of the system by changing the length of the spreading code depending on the nature of the wireless environment. If the code is shortened, the system's behavior tends towards that of an OFDMA air-interface; however if the code is lengthened, it behaves like an MC-CDMA system [5, 6]. This technique is useful if the system is required to operate under hostile channel conditions and there is a need to adapt the system depending on certain services. For example, if a user wants to make a VoIP based phone call, an MC-CDMA based system may be more appropriate as it provides a lower BER at lower data rates; however if the user wants to download a large data file, an OFDMA based system would be the more appropriate choice.

It should be noted that NTT DoCoMo's use of an MC-CDMA system to provide access to low throughput services is contrary to the convergence and evolutionary approach to 4G systems, where legacy technologies would be more appropriate for providing such services.

7.3.2 Multi-Antennae Technologies

The principle of multi-antennae technologies is to make use of multiple antennae at either the transmitter, the receiver or both. There are several different architectures which can be implemented depending on where multiple antennae are used. If multiple antennae are used at the transmitter and not at the receiver it is known as a MISO (Multiple-Input-Single-Output) system. If multiple antennae are only used at the receiver then it's a SIMO (Single-Input-Multiple-Output) system, and if multiple antennae are used on both the receiver and transmitter this is a MIMO (Multiple-Input-Multiple-Output) system [5].

The advantages of using multi-antennae technologies depends on the application; however there are three primary techniques that can be used [17]:

- **Beamforming:** This technique involves the use of antennae that are spaced at half the length of a wavelength apart. Beamforming is used in line-of-sight applications where a narrow and powerful radio wave can be transmitted and received with a high degree of accuracy.

- **Spatial Diversity:** The use of multiple antennae to obtain multiple versions of the same transmitted signal, each with different attenuations and phases is proving to be an extremely popular and effective multi-antennae technique. By employing multiple antennae at both ends of the channel, the receiver can generate multiple channel estimates based on each path between the antennae, and thereby improve the accuracy of channel equalization techniques in hostile non-line of sight wireless channels. Spatial diversity techniques have already been implemented in several proprietary WiFi systems and the IEEE's 802 Working Group has also taken note of this technique's advantages and is developing an addition to the 802.11 standard to exploit this technique.

- **Spatial Division:** Currently there are three forms of access division used in cellular communications, based on time, frequency and code division. Spatial Division refers to the use of multiple antennae to transmit different signals on each antennae set with the objective of increasing the capacity of the system's throughput. By using multiple antennae on both the antennae and receiver, the interference from neighboring signals can be measured and minimized through channel estimation and equalization techniques.

The use of spatial diversity or spatial division could increase a new 4G access network's resilience to interference and increase its throughput capacity. Some researchers are even investigating methods to dynamically modify the multi-antennae architecture and technique, depending on the service requirements of users and the nature of the channel.

7.3.3 Software Defined Radio

The development of converged access networks has prompted many researchers to examine the feasibility of implementing a software defined radio (SDR). The principle of the SDR is that a single terminal can access any network by modifying the properties of its air-interface through the use of software [5]. Ideally, an SDR would consist of an adaptable radio interface that will downsample the received signal to the appropriate data rate for processing, one or more high performance analog-to-digital converters (ADC) and digital-to-analog converters (DAC), digital signal processors (DSP), and a microcomputer capable of adapting to different protocols and adjusting the parameters of the rest of the air-interface. Unfortunately, designing a system capable of transmitting or receiving signals at any frequency requires extremely expensive equipment and is therefore currently unfeasible for use in commercial communications equipment[5].

A potential use for current SDR systems is the prototyping of 4G air-interface systems to

determine their performance characteristics in a real wireless environment. The Hardware-in-the-Loop (HALO) system is a SDR prototyping system developed by Signalion in Germany [18]. The system is configured through the use of MATLAB code and can be modified to test a wide variety 4G air-interface architectures. Unfortunately, the HALO system only operates within the 2.4 GHz and 5 GHz range due to the extremely high demands placed on the digital signal processing hardware. However, the system is more than adequate for determining the various performance characteristics of OFDMA and MC-CDMA in a real wireless channel, and the performance of these systems at higher frequencies can be extrapolated using mathematical models.

References

[1] WP8F, "Recommendation M.1645: Framework and overall objectives of the future development of IMT-2000 and systems beyond IMT-2000," tech. rep., International Telecommunications Union - Radio Communications Sector, 2003.

[2] R. Prasad and S. Hara, *Multicarrier Techniques for 4G Mobile Communications*. Universal Personal Communications Series, London: Artech House, 1st ed., 2003.

[3] S. Plass, S. Sand, and G. Auer, "Modeling and Analysis of a Cellular MC-CDMA Downlink System," in *The 15th IEEE International Symposium on Personal, Indoor and Mobile Radio Communications*, IEEE, September 2004.

[4] S. Plass and S. Kaiser, "MC-CDMA versus OFDMA in Cellular Environments," in *European Signal Processing Conference*, NTT DoCoMo, September 2005.

[5] R. Prasad and Y. Kim, *4G Roadmap and Emerging Communication Technologies*. Universal Personal Communications Series, London: Artech House, 1st ed., 2006.

[6] M. Etoh, ed., *Next Generation Mobile Systems, 3G and Beyond*. West Sussex, England: John Wiley and Sons, 1st ed., 2005.

[7] T. Rappaport, *Wireless Communications: Principles and Practice*. Prentice Hall Communications Engineering and Emerging Technologies Series, Upper Sadle River, New Jersey: Prentice Hall PTR, 2nd ed., 2002.

[8] P. Mhnen, J. Riihijrvi, M. Petrova, and Z. Shelby, "Hop-by-Hop Toward Future Mobile Broadband IP," in *IEEE Communications Magazine*, IEEE, March 2004.

[9] L. Zhen, Z. Wenan, S. Junde, and H. Chunping, "Consideration and Research Issues for the Future Generation of Mobile Communication," in *IEEE Canadian Conference on Electrical and Computer Engineering*, IEEE, 2002.

[10] J. Sun, J. Sauvola, and D. Howie, "Features in Future: 4G Visions from a Technical Perspective," in *Global Telecommunications Conference*, IEEE, November 2001.

[11] S. Frattasi, H. Fathi, F. Fitzek, R. Prasad, and M. Katz, "Defining 4G Technology from the Users Perspective," in *IEEE Network*, IEEE, January/February 2006.

[12] M. Katz and F. Fitzek, "On the Definition of the Fourth Generation Wireless Communications Networks: The Challenges Ahead," in *International Workshop on Convergent Technologies (IWCT)*, 2005.

[13] J. Qaddour and R. Barbour, "Evolution to 4G Wireless: Problems, Solutions and Challenges," in *The 3rd ACS/IEEE International Conference on Computer Systems and Applications*, IEEE, 2005.

[14] S. Hui and K. Yeung, "Challenges in the Migration to 4G Mobile Systems," in *IEEE Communications Magazine*, IEEE, December 2003.

[15] V. Gazis, N. Housos, A. Alonistioti, and L. Merakos, "Generic System Architecture for 4G Mobile Communications," in *The 57th IEEE Semiannual Vehicular Technology Conference*, IEEE, April 2003.

[16] K. Fazel and S. Kaiser, *Multi-Carrier and Spread Spectrum Systems*. John Wiley and Sons Ltd, 1st ed., 2003.

[17] L. Hanzo and T. Keller, *OFDM and MC-CDMA: A Primer*. London: John Wiley & Sons, Ltd, 1st ed., 2006.

[18] M. Henker and V. Kotzsch, *Hardware in the Loop: HaLo220*. Signalion, Germany, 1 ed., August 2006.

Appendix A

Contents of the Compact Disk

The attached compact disk (CD) contains additional resources that may be useful to readers of this document. The directory structure of the CD is shown in Figure A.1.

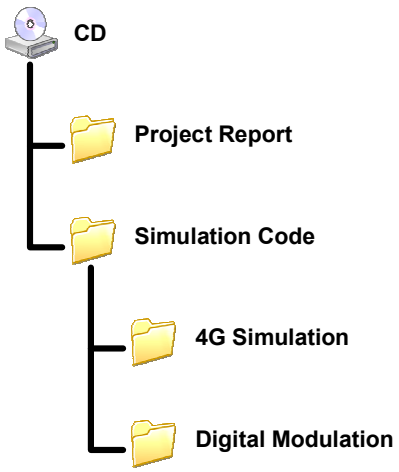

Figure A.1: Directory structure of attached CD

The contents of the CD are organized as follows:

- The Project Report directory contains an electronic copy of this document and requires Adobe Acrobat Reader to view the file.
- The Simulation Code directory contains the MATLAB scripts used to simulate the performance of the two candidate 4G air-interface architectures, i.e. OFDMA and MC-CDMA. The MATLAB scripts were written using MATLAB R2006a with the aid of Mathworks' MATLAB Communications Toolbox.