

https://dspace.org/

Simulation of ore dressing plants

Ford, Merrill Anthony

2015-01-21
http://hdl.handle.net/10539/16662

Downloaded from a DSpace repository. https://dspace.org/

equations (Pownall (1980)). A very important experimental contribution was made by Kelsall (1952) but even so this approach has not yet been fruitful.

A better understanding of cyclone performance was made possible by the adoption of the 'partition curve' which gives the fractional recovery of each particle size into each of the two products. This curve has an S-shape and does not necessarily pass through the origin. In 1953 Kelsall (1953) distinguished between recovery of particles to the underflow by the seperate mechanisms of entrainment and true classification. He suggested that the recovery of particles of zero size to the underflow is equal to the recovery of the water in the feed to the cyclone to the underflow. The very fine solids in the underflow can be regarded as having 'short circuited' the classification.

Then as in sub-chapter 16.1.1, when B = 0

$$R_c(x) = (R_a(x) - A)/(1 - A)$$

and A is equal to the recovery of feed water in the underflow (De Kok (1977)).

Yoshioka and Hotta (1955) discovered that the corrected partition curve, under various conditions, when plotted against a dimensionless size parameter tended to coincide with a single curve which they termed the 'reduced efficiency curve'. The reference point they chose was the D_{50} size, which is the size of particle for which the corrected curve splits equally into overflow and underflow.

In over two hundred tests on cyclones varying from 100 mm to 400 mm, Lynch and Rao (1975) have confirmed Yoshioka and Hotta's (1955) observation and its general applicability. In a series of papers Lynch and his co-workers (1974, 1975, 1978) have shown that:-

(a) The reduced efficiency curve of geometrically similar cyclones is a property of the ore and is independent of cyclone diameter.

(b) The critical design variables are the inlet and outlet diameters, while the cyclone diameter is merely the size of the housing required to carry these diameters for normal operation.

Determining $R_a(x)$ for a cyclone requires finding three parameters A, $x_{50} = D_{50}$ and α or β (see equations 17.11 or 17.13) all of which are dependent on the cyclone geometry and cyclone feed.

Many attempts have been made to correlate D_{50} with the cyclone geometry and feed conditions from theoretical, empirical and combined theoretical and empirical approaches. If each author can be assumed to have kept the dimensions of their test cyclones geometrically similar, so that each of the dimensions have a fixed proportionality to D_c, the cyclone diameter, then their results can be summarized in the form:-

$$D_{50} \propto D_c^{a}.Q^{b}.(\rho_s - \rho_L)^{c} \qquad \text{---------- (17.14)}$$

$$D_{50} \propto D_c^{d}.P^{e}.(\rho_s - \rho_L)^{f} \qquad \text{---------- (17.15)}$$

$$Q \propto D_c^{g}.P^{h} \qquad \text{---------- (17.16)}$$

where Q is the volumetric feed rate

P the head or pressure drop across the cyclone

ρ_s, ρ_L the solid and liquid specific gravities and

a through h satisfy gb+a = d, hb = e and f = c

AUTHOR	DATE	EQUATION 17.14			EQUATION 17.15			EQUATION 17.16	
		a	b	c	d	e	f	g	h
Dahlstrom	1954	1.36	-0.53	-0.5	0.408	-0.265	-0.5	1.8	0.5
Yoshioka & Hotta	1955	1.5	-0.5	-0.5					
Bradley	1955	1.5	-0.5	-0.5	0.5	-0.25	-0.5	2.0	0.5
Chaston	1958							2.0	0.5
Povarov	1961				0.5	-0.25	-0.5		
Lilge	1962	1.5	-0.5	-0.5	0.5	-0.25	-0.5	2.0	0.5
Trawinski	1976	1.5	-0.5	-0.5	0.5	-0.25	-0.5	2.0	0.5
Plitt	1976	1.18	-0.45	-0.5	0.34	-0.252	-0.5	1.87	0.56

The good agreement between all authors, even though different approaches have been used, is pleasing. Lynch and Rao (1975) have also developed an empirical correlation for D_{50}, but it is not in a form suitable for comparison with the above.

The flow and water split have been carefully examined, but have so far defied theoretical treatment. The most common empirical

form has been:-

$$S = (D_u/D_o)^X$$

where $S = \frac{\text{underflow volumetric flowrate}}{\text{overflow volumetric flowrate}}$

and X varies between 3.0 and 4.4. Plitt (1976) has reviewed the literature concerning this split.

In the literature only two cyclone models exist which explicitly consider the cyclone dimensions and the feed conditions, Lynch and Rao (1975) and Plitt (1976). Both these models use the partition curve and incorporate empirical correlations of the parameters with the dimensions and feed conditions. Plitt's (1976) data incorporates that of Lynch and Rao (1975) and is thus more extensive. Plitt's (1976) model has been selected as the cyclone model for the simulator. The model can be summarized as follows:-

D_c = Inside diameter of cyclone measured at bottom of vortex finder

D_i = Inside diameter of cyclone inlet or $\sqrt{4A_i/\pi}$ for non-circular inlet

D_o = Inside diameter of overflow vortex finder

D_u = Inside diameter of underflow apex orifice

h = Free vortex height of cyclone, defined as the distance from the bottom of the vortex finder to the top of the apex orifice.

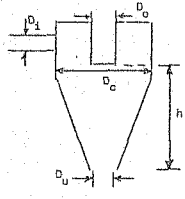

$$D_{50} = \frac{0.357\, D_c^{0.46} D_i^{0.6} D_o^{1.21} \exp(0.063\phi)}{D_u^{0.71} h^{0.38} Q^{0.45} (\rho_s - \rho_L)^{0.5}}$$

$$S = \frac{1.9(D_u/D_o)^{3.31} h^{0.54} (D_u^2 + D_o^2)^{0.36} \exp(0.0054\phi)}{H^{0.24} D_o^{1.11}}$$

$$Q = \frac{7.0 \times 10^{-6} . P^{0.56} D_c^{0.21} D_i^{0.53} h^{0.16} (D_u^2 + D_o^2)^{0.49}}{\exp(0.0031\phi)}$$

$$R_v = S/(S + 1)$$

$$R_f = (R_v - R_s\phi)/(1 - \phi)$$

$$\beta = 0.372 \exp(-1.56\, R_v) . \left(\frac{D_c h}{Q}\right)^{0.15}$$

and D_c, D_i, D_o, D_u, h centimetres

H	metres	pressure drop (metres of feed slurry)
Q	metres^3/sec	volumetric flow of feed during
P	*kilopascals*	*pressure drop across cyclone*
ϕ	percent	volume fraction of solids in feed
D_{50}	micrometers	
ρ_s, ρ_L	"	specific gravity, solids & liquids
R_s, R_f, R_v	"	fractional recovery of solids, fluids, slurry to underflow

$$R_c(D) = 1 - \exp(-0.693\, (D/D_{50})^{\beta})$$

$$R_s(D) = (1 - R_f) . R_c(D) + R_f$$

Several assumptions have been made to make the implementation of this model more efficient in terms of computer time.

(i) The cyclone has standard dimensions

$$D_o = D_c/6$$

$$D_i = D_c/5$$

$$D_u = 0.118\ D_c$$

This allows the cyclone geometry to be specified by two parameters: D_c and h/D_c.

(ii) The feed slurry has a density of 1030 kg/m^3

In Plitt's correlation the pulp density is on average 1030 kg/m^3 and by assuming this value to be constant H can be expressed in kilopascals and is replaced by P. This helps linearize the equations while making very little difference to the results.

$$H = P/1030/9.8 \times 1000 = 0.099P$$

(iii) $\rho_L = 1.0$

This assumes the fluid medium is water, (if brine is used then ρ_L must be changed to 1.2).

(iv) The terms $\exp(0.0054\phi)$ and $\exp(0.0031\phi)$ equal one

This is approximately true as the maximum value of ϕ used by Plitt is $\phi = 13\%$, and this makes differences of 7% and 4% to S and P, respectively.

(v) $R_f = R_v$

This is approximately true for dilute slurries, and if this assumption is not made internal iterations have to be done to solve for β and R_v simultaneously.

Inserting these assumptions into Plitt's model gives:-

$$D_{50} = 35.03\, D_c^{0.78} h^{-0.45} P^{-0.252} (\rho_s - 1)^{-0.5} \exp(0.083\phi) \qquad (17.17)$$

$$S = 0.323\, D_c^{-0.38} h^{0.54} P^{-0.24} \qquad (17.18)$$

$$R_V = S/(S + 1) \qquad (17.19)$$

$$\beta = 2.04\, D_c^{0.044} h^{0.127} P^{-0.084} \exp(-1.58 R_V) \qquad (17.20)$$

$$R_c(D) = 1.0 - \exp\{-0.693\,(D/D_{50})^{\beta}\} \qquad (17.21)$$

$$R_e(D) = (1 - R_V) R_c(D) + R_V \qquad (17.22)$$

where the three parameters provided by the user are:-

(i) D_c centimetres

(ii) h/D_c -

(iii) P kilopascals

17.2.4 Subroutine CYCL - Cyclone Library Module

To assist the convergence of a circuit containing this highly non-linear model the derivatives of each output variable with respect to the corresponding input variable is calculated in the model subroutine. The form of the derivatives is quite involved as D_{50} is a function of ρ_s and ϕ, both of which are dependent on the feed in each category.

(i) Parameters

The parameters that follow are in the order in which they must be presented to the simulator. The values in brackets are the ranges of Plitt's data.

(a) D_c centimeters $(3 \leq D_c \leq 50)$

(b) h/D_c - $(0.8 \leq h/D_c \leq 5.2)$

(c) P kilopascal $(50 \leq P \leq 210)$

(ii) Physical Properties

The actual size corresponding to each size interval plus the specific gravity of the material in each G-class is required. If only one G-class is used the single specific gravity provided must be that of the solids as a whole.

(iii) Units

The model calculates the fractional distribution between the two outputs, therefore the mass flows in the streams can be in any convenient set of units. However the solids and water flows must use the same units (e.g. both kg/hr or both tons per day) and the model parameters must be in the prescribed units.

17.3 Modelling of Gravity Separators

Gravity separators are basic to most ore dressing operations. Their roles varies from preconcentration to the production of the final concentrate. However modelling of these units has lagged behind their usage.

A dense media separator, modelled by using a partition curve, was one of the first attempts at quantifying the operation of ore-dressing equipment. The only development has been to use an empirical functional form to represent the partition curve. Loveday (1970) suggested the integral form of the Gaussian function, which is modified for easier computation. Valentik and Whitmore (1964) tried to make the model less empirical by considering the flow properties of the fluid in the dense media bath. They found that the fluids seldom have Newtonian flow properties and behave like Bingam fluids. They discuss the effects of viscosity and turbulance but do not present a model.

Much work has been done to make jigging more efficient (Zimmerman (1974,1975) and Vinogradov (1968)). Jigging can be treated as a stratification process (Meyer (1964) and Vinogradov (1966) where the difference in potential energy before and after stratification give a measure of the rate at which seperation occurs. Meyer (1964) relates the kinetics to the jig strokes, but this does not provide a model suitable for simulation and the modeller must once again resort to the partition curve.

Improved shaking tables have been developed, like the Bartles-Mozley Concentrator and the Bartles crossbelt concentrator, but their operation has only been described in qualitative terms.

Sluices, spirals and Reichert cones are frequently used but virtually

no quantitative theory on their operation has been proposed (Naguib (1971)).

The only quantitative theory found in the literature is by Vinogradov et al (1968). The kinetics of gravity processing in mineral separations is considered and differential equations are developed, these can be solved to give the terminal sinking rates of the particles. It may also be possible to use this theory for jigs, spirals and shaking tables once a transport model is developed to go with the separation model.

In general gravity separator models are poorly developed and it is necessary to use fixed partition curves to describe their operation at present. The development of a mechanistic model is likely to be slow as the fluid flows are complex and hence transport models difficult to find.

17.4 Modelling of Sorters and Electrostatic and Magnetic Separators

The history of separation methods using electro-magnetic radiation has been thoroughly reviewed by Hall-Carpenter (1970). It is apparent that these methods have existed for a long time and that the physics of the processes seem well understood.

Hopstock (1975) describes the physics of low-intensity dry magnetic separators. Using several simplifying assumptions he is able to balance the centrifugal and magnetic forces to obtain a relationship between the percentage of iron in the particles which stick to the drum and the speed of rotation of the drum. Reasonable agreement is found between the experimental and theoretical results.

Lawver and Hopstock (1974) review the principles of wet high intensity magnetic separation. Similarly to Hopstock (1975) they balance the magnetic and hydraulic drag forces while assuming gravitational forces to be negligible. They conclude that 25 μm is the smallest size particle that can be retained in a matrix. They also show that the apparent volume susceptibility of a mixed particle is the weighted sum (by volume fractions) of its component susceptibilities. Lawver and Hopstock (1974) give a good description of the different types of WHIMS machines available and their uses.

Certa et al (1964) conducted many experiments to determine the effect of changing electrical field, air pressure, position of electrodes, splitters, drum speed and diameter, voltage and mineral size distribution on a laboratory electrostatic separator. They found that operation at reduced air pressure is more efficient, particularly for the larger sizes, and concluded that the electrical factors are more important than the mechanical ones.

Morrison (1974) created a model of the high intensity roll separator by considering the subprocesses; selection at the earthed rotor surface, electrical force, the image force, the centrifugal force, the selection by trajectory and the effect of the corona region. However Morrison states that no solution is known for the equations he developed. On top of this field and charge density measurements are difficult to make, and Morrison suggests that a distribution of conductivities in each mineral species should be considered. Morrison eventually resorts to a simple probability approach for the conductor/non-conductor split and gets good results.

The mechanistic models discussed for both magnetic and electrostatic separators are complex and their solution requires much computational effort. Even if the equations can be solved their results only represent an ideal seperator in which all particles in a particular category will report to the same output stream. So although the physics is essential for the design of the equipment, from a simulation point of view one might as well choose, on the basis of experimental work, a reasonable partition curve with the desired cut value, and then adjust the machine variables to achieve this value.

The modelling of sorters is reviewed by King (1977) and it seems that very little has been done. King proposes a model based on the sum of the product of various probabilities like; the probability of recognition and probability of deflection. This model results in a fixed partition curve for the sorter.

17.5 Modelling of Flotation

In assessing the probability of a particle being floated, Schuhmann (1942) according to Woodburn (1976) assumed that:-

$$P_{overall} = P_c \cdot P_a \cdot P_r$$

where P_c = probability of a successful bubble - particle collision

P_a = probability of a collided particle adhering

P_r = probability of the particle being retained by the bubble

Tomlinson and Fleming (1963) redefined P_r as $P_e \cdot P_f$ where

P_e = probability of the particle being retained while in the liquid

and P_f = probability of the particle being retained while in the froth.

Davis (1964) included another term which considers the probability of a particle being coated by collector.

The determination of each of these probabilities has been reviewed by Mika and Fuerstenau (1969), Woodburn (1970) and Flint (1974).

Once an overall probability has been established it is possible using population balance models to compute the rates of flotation. This has been done by Kelsall (1961) and Davis (1964). The cumulative recovery of a mineral species (R) from m flotation cells is given as:-

$$R = M\left(1 - (1 - P)^{m}\right) \qquad \text{---------- (17.23)}$$

where M is the maximum possible recovery and P the probability of flotation for the particular species.

The complicated nature of the various subprocesses makes it impossible to obtain values for their probabilities and Davis (1964) had to be satisfied with an overall probability for each mineral in each bank of cells.

Since it is desirable to determine model parameters from laboratory tests a kinetic model has been used to account for the dynamic nature of the process. According to Mika and Fuerstenau (1969) - 'A consensus has seems to have been reached that flotation of a sufficiently homogeneous assembly of particles occur at a rate which is proportional to the population density of particles'. This results in a 'first order law' for flotation and although it is an empirical 'law', testwork by Bull (1963), Imaizumi and Inoue (1963), Tomlinson and Fleming (1963), Jowett (1971) and Loveday and Marchant (1973) prove its validity in many cases. Then if W_i is a 'sufficiently homogeneous assembly' the 'law' can be expressed as:-

$$r_i = \frac{dW_i}{dt} = k_i W_i \qquad i = 1,n \qquad \text{---------- (17.24)}$$

where r_i is the rate of flotation of species i

k_i is the flotation rate constant for species i

and n the number of species

Consider a single flotation cell operating at steady state with F_i the mass flowrate of component i in the feed and $F = \sum_{i=1}^{n} F_i$

C_i the mass flowrate of component i in the concentrate and $C = \sum_{i=1}^{n} C_i$

T_i the mass flowrate of component i in the tail and $T = \sum_{i=1}^{n} T_i$

W_i the mass of component i in the cell and $W = \sum_{i=1}^{n} W_i$

A mass balance over the cell for each component gives:-

$$F_i = C_i + T_i \qquad \text{---------- (17.25)}$$

and as the cell at steady state is equivalent to a batch cell at some instant in time (Bull (1969)), by equation 17.24

$$C_i = k_i W_i \qquad \text{---------- (17.26)}$$

To find the steady state values of C_i, T_i and W_i for fixed k_i and F_i for each i, another relationship is required. This missing relationship is the residence time distribution of the species in the cell. Woodburn (1970) quoting Niemi and Jowett finds that the assumption of perfect mixing is adequate. Harris et al (1975) found that a Denver laboratory flotation cell behaves as a perfect mixer except at flowrates much beyond the natural capacity. Applying this to a flotation cell implies that the concentration of a species in the cell must be the same as the concentration of the species in the tail.

i.e. $W_i/W = T_i/T \qquad \text{---------- (17.26)}$

and inserting this into equation 17.24 and 17.25 gives:-

$$\left.\begin{aligned} C_i/F_i &= \frac{k_i\tau}{1 + k_i\tau} \\ T_i/F_i &= \frac{1}{1 + k_i\tau} \\ W_i/F_i &= \frac{\tau}{1 + k_i\tau} \end{aligned}\right\} \qquad \text{---------- (17.27)}$$

where $\tau = W/T$ and is called the mean residance time.

If k_i and τ are given then each C_i, T_i and W_i can be directly obtained using equation 17.27, however if W instead of τ is given then simultaneous solution is required. (This case will arise if the cell volume (V) and the percentage solids in the underflow (%S) are specified, so that $W = V \times \%S/(\%S(\frac{1}{\rho_s} - \frac{1}{\rho_w}) + \frac{100}{\rho_w})$ and ρ_s and ρ_w are the densities of the solids and water respectively (the units of W, V and ρ must be consistent)).

Now although there may be consensus on the 'first order-law' there does not seem to be any agreement on what is a 'sufficiently homogeneous assembly' of particles. If one took this to the extreme of assigning each particle a flotation rate constant then because of the large number of particles one would expect a continuous distribution. This approach has been taken by Pogorly (1962), and Imaizumi and Inoue (1963) while Lovedey (1966) has suggested that this distribution can be well represented by a gamma function.

Another method of choosing a homogeneous assembly of particles would be to assume that each mineral species has a particular rate constant. This method which discretizes particles into S-classes has been used by Davis (1964) with some success. It has however been well established by several authors including Imaizumi and Inoue (1968), Woodburn, King and Colborn (1971), Maharatra and Kapur (1975), Tomlinson and Fleming (1967) and Bartlett and Muler (1974) that particle size has a significant effect on the flotation rate. Therefore splitting the particles into categories associated with discrete size and grade (D and G) classes, as suggested by Tomlinson and Fleming (1963) and Bartlett and Muler (1974), each with its own flotation rate constant should be advantageous. Tomlinson and Fleming obtained an excellent correspondance between the experimental and predicted values for the recovery of pure apatite and hematite from a mixture of the two minerals.

Even if the particles have a fixed size and grade it is still possible for there to be a variation in surface properties and so flotation rate within the DG-class. For example the collector will not necessarily coat exactly the same fraction of the surface of each particle; or because of variation in particle shape or surface roughness the surface area of the same size particles could be different; or in mixed particles of fixed mineralogy the surface area occupied by a certain mineral will vary from particle to particle. This implies that with each D-class or G-class or DG-class a further distribution of particles into assemblies of particles with a common flotation rate constant should be done. Lovedey and Marchent (1973) have done this using a gamma function to describe the distribution in each DG-class. King (1973), although analysing the problem using continuous size and grade classes, calculates with discrete DG-classes and uses the gamma function to describe the variation within the DG-class. King (1975) later changed to a fixed discrete distribution of particles between S-classes in each DG-class. Sutherland (1977) goes the whole way and discretizes the particles into DGS-classes and associates

a flotation rate constant with every DGS-class. This is subtly different from King's (1975) method of associating each S-class with a flotation rate constant. Scrimgeour, Hamilton and Toong (1970) and Bull (1988) also associate the flotation rate constant with the S-class and let the distribution of mass in each S-class cause the difference in flotation rate between DG-classes.

The use of a fixed function or a fixed discrete distribution to describe the distribution of particles between S-classes can lead to misleading results. This happens because particles with a certain flotation rate are selectively removed and the shape of the distribution changes, so causing the fixed distribution to become more and more incorrect as the plant becomes more complex. This fault can often be obscured as the method of determining the flotation rate constants may compensate for the error. Therefore it appears that carrying discrete DGS-classes in the plant streams allows an accurate mass balance while providing sufficiently homogeneous assemblies of particles for the first order law of flotation to apply.

Whether the modeller associates the flotation rate constants with each DGS-category or only with the S-classes will depend on how he determines these rate constants. The former seems to offer more flexibility for a little extra storage, as once the rate constants for each DGS-class have been determined for one feed they will apply to any other feed, whereas for the latter a change in feed will require more testwork to determine the new mass distribution between S-classes.

It has been implicit in the preceding paragraphs that conditions of 'free flotation' exist. However it has been observed (Tomlinson and Fleming (1963), King (1973)) that there is a limit to the amount of material that can be floated in a single cell. This can be related to the carrying capacity of the bubbles and the ability of the froth to retain floated particles, which in turn can be related to the cell operating conditions; cell volume, machine type, degree of short circuiting, impeller speed, machine geometry, degree and type of aeration, froth column depth. This implies that under conditions of 'hindered flotation', k_i of equation 17.27 is not a constant but dependent on operating conditions so that:-

$$k_i = k_i' \cdot \Psi \qquad \text{---------- (17.28)}$$

where Ψ is a parameter that varies between zero and one. Tomlinson and Fleming (1963) suggest that under conditions of 'hindered flotation' the

rate of flotation will be zero order, however they do not show how or when the changeover should take place.

King (1973) sets $\Psi = \gamma.A.S_{AV}$ on the assumption that the flotation rate is proportional to the free bubble surface area, the concept of 'free bubble surface area' is discussed by Mika and Fuerstenau (1969). A is the bubble surface area per unit volume of pulp and S_{AV} the fraction of free bubble surface area on average, both of which are calculated from operating variables. γ is the fraction of particles which on reaching the froth phase are recovered in the concentrate, it is a function of pulp level, particle size and mineralogy. If pulp level and aeration rate are used to control the cell then γ and A can be used as control variables. S_{AV} is determined iteratively within the model.

Sutherland (1977) suggests that because of the many uncertainties inherent in plant applications that such detailed modelling is not justified. He treats hindered flotation empirically by stating that some limit must be placed on the rate of concentrate flow from a cell, and that this is linked to the saturation of bubbles with particles. This implies a lowering of the flotation rate constant. First a limit, CMAX, is set and then the total concentrate flowrate, CTOT=EC_i, without suppression, is found.

If CTOT≤CMAX $\Psi=1$

If CTOT>CMAX $0<\Psi<1$,

and Ψ is found iteratively so that $EC_i = 2.CMAX\ (1-CMAX/CTOT/2)$ is satisfied. Although EC_i will be greater than CMAX, it increases slowly with CTOT and so avoids having a discontinuity.

Two library modules for flotation have been programmed for the simulator. The first is based on Sutherland's (1977) model and should be useful in design stages as it does not require much data, outside the flotation rate constants, that cannot be estimated by the modeller. The second module is based on King's (1975) flotation model in so far it uses the parameters γ, A and S_{AV}. However for the library module the variables carried in the streams are discrete DGS-class mass flows and the flotation rate constants, (although they can be obtained using King's (1975) technique of $k_{DGS} = k'_S\phi_D$) have the added possibility of being obtained as:-

$k_{DGS} = k'_S\phi_{DG}$. (The subscripts D, G and S indicate the material associated with the relevant discrete category, so that k_{DGS} is the flotation rate constant for a discrete DGS-class while k'_S implies that k'_S is related only to the discrete S-classes. ϕ_D has been defined as the fractional efficiency of flotation of particles of size D, so

that Φ_{DG} will be the fractional efficiency of flotation of particles in each discrete DG-class relative to k_S'.).

17.5.1 Subroutine FLTN - Flotation Library Module (Sutherland)

The subroutine has been programmed to accept a variety of data so that the user can specify his cell in whatever way is most appropriate to his problem. To completely specify the cell, for this model, any two of the following four parameters must be provided:-

(a) Cell residence time

(b) Cell solids holdup

(c) Cell volume

(d) Percent solids in the tail (underflow)

with the exception that if only residence time and solids holdup is specified this does not provide information on the water split and so another parameter is required. Zeros must be placed in the position of those parameters which are not being provided.

An advantage in using this module is that it can model a bank of cells, so that the process flow diagram will require fewer streams. Thus storage and computational effort is saved.

(i) *Parameters*

The full list of parameters required, in order are:-

(a) Number of cells in bank
(b) Cell residence time
(c) Cell solids holdup
(d) Cell volume
(e) Percent solids in underflow
(f) Maximum concentrate (float) flow in each cell
(g) Physical property number of flotation rate constants for each DGS-class. (The order must be similar to that required in paragraph 14.4.2 (V1) when I2 = 1).

(ii) *Physical Properties*

(a) k_{DGS} the flotation rate constant for each DGS-class (elements in the same order as stream variables).

(b) When cell volume is an essential parameter for specifying the cell then the specific gravity of each G-class must be available as properties.

(iii) Units

Any units can be used as long as they are consistent. If the specific gravity is used care should be taken in the choice of units for mass and volume.

17.5.2 Subroutine FLTK - Flotation Library Module (King)

This module is based on the modified form of King's (1973) model as discussed in previous paragraphs.

(i) Parameters

All of the following nine parameters/operating variables must be provided in sequence:-

(a) Cell volume V (m^3)
(b) Aeration rate G (m^3/S)
(c) Fractional efficiency froth recovery γ
(d) Bubble size (m)
(e) Bubble residence time τ (S)
(f) Percentage solids to concentrate
(g) Physical property number associated with k_S^i
(h) Physical property number associated with ϕ_{DG}

(ii) Physical Properties

(a) k_S^i the flotation rate for each S-class
(b) ϕ_{DG}. This array is given as a string, in which the D-classes vary with each G-class in order
(c) The actual size of the particles in each D-class
(d) The specific gravity of material for each G-class as property one

(iii) Units

The units are as for the parameters and the stream mass flows should be in kg/S. The flotation rate constants must have units of S^{-1}.

17.6 Modelling of Solid/Liquid Separators

Over the past decades several techniques for finding the required area of a thickener from batch settling tests have been developed. Noteable are those of Coe and Clevenger (1966), Kynch (1952), Talmage and Fitch (1955) and Yoshioka et al (1957). More recently contributions related to flocculated pulps and pulp compression have been made by Scott (1968), Adorjan (1975) and Kos (1974). A very comprehensive review of

gravity thickening has been done by Pearse (1977) and detailed discussion of the pro's and cons of the above techniques is given.

In real continuous thickeners steady state does not appear to be maintained for any length of time (Fitch (1968), Hasset (1969)) due to variations in feed volume and solids concentrations. Hasset (1969) states that both solid and liquid overloading can cause a dirty overflow, therefore what has been done is to overdesign the thickener to handle surges and keep a clear overflow.

Designing a continuous thickener is often done by running a continuous pilot plant to discover what feed flowrate can be coped with by one square meter of thickener and then simply scaling this up to the full scale plant. This method may be reliable but it is expensive and time consuming. Sedimentation theory has been used by Blake and Colombara (1977) and Wouda, Rietma and Ottengraf (1977) to describe the particle motion in batch and continuous thickeners, while Tarrer, Lim, Koppel and Grady (1974) using Kynch's theory and a plug flow model calculate thickening capacity. Kos (1974) presents a model which can predict the solids concentration profile in a continuous thickener.

Continuous thickening involves two well studied phenomena, namely sedimentation and compaction and although improvements in the understanding of the mechanism of thickening has evolved and many models proposed, none are able to completely predict the performance of continuous thickeners from laboratory tests. This is born out by Pearse (1977) who states that the 'state of the art' is best conveyed by the following quotation:-

> 'We dont as yet have any theoretically solid or empirically process way of predicting thickener performance, completely and validly from measurements made on small samples of suspension'. (B. Fitch, Chief Scientist, Dorr-Oliver Inc., 1975).

Because of the uncertainties in design procedures most thickeners are overdesigned, and operated to ensure a clear overflow. During the design stage a suitable percentage solids for the underflow is selected and the thickener is then operated to keep to the designed value, but even if there is a surge in the feed, the built in overdesign will usually allow the overflow to remain clear while the underflow retains the designed percent solids. If the thickener is overloaded the usual remedy would be to increase the underflow flow rate but this will decrease the percent solids in the underflow. However this transient overloading cannot be

handled by a steady state simulator therefore for almost any real steady state simulation specifying; the overflow must be clear and the percent solids in the underflow, will be adequate. This type of model can be handled by the MIXR subroutine, when the percentage solids in the product stream is specified. The water addition rate will be negative, in this case, indicating water removal. Filters can be similarly specified.

If the user wishes to use more mechanistic models, as described by Pearse (19?7) for thickeners or by Tiller (1971), Nemeth (1967) and Wakeman (1976) using D'arcy's Law and the Kozeny-Carman equation for filters, the user should write his own model subroutins.

By using the simple MIXR module to simulate solid/liquid separators in the overall circuit a reasonably good result can be obtained without the attendant inefficiencies of a general purpose model requiring the solution of differential equations. While the detailed user written solid/liquid separation model can be specific to the user's requirements and use the calculated mass flows from the simulation.

PART IV

TEST EXAMPLES

18 TEST EXAMPLE I

In this example many points concerning the simulator usage are demonstrated. However the main purposes are to show that; the coding is correct, the connection between plants and the operation of the converter, the variety of outputs available, and the convergence of the reduced Newton method for linear systems.

The example is divided into five sections, each of which will be used to demonstrate particular facets of the simulator. The remarks on each section should be read in conjunction with the flow diagram and computer printout.

18.1 Flow Diagram

The flow diagram is given in figure 25. From this diagram it can be seen that:-

(i) There are three separate plants

(ii) There are four connections between plants

(iii) Each plant has two nodes and one of the nodes in plant 4 is simple

(iv) The numbering of units is arbitrary

(v) The numbering of streams is arbitrary

(vi) Each plant has several feeds and outputs

(vii) Some nodes have water feeds

(viii) The nodes have various types of interlinked recycle loops

18.2 Data

The following comments should be read in conjunction with chapter 14 and computer display of the data, plus the computer echo of the data.

(a) System Data

(i) The use of all KEYWORDS except READ and TOLM

(ii) Plant 3 has 4 D-classes, 3 G-classes and 1 S-class; plant 2; 3,3,2 D,G and S-classes; and plant 4:3,1,1 D,^ and S-classes. (Keyword NDGS)

(iii) The converter has to drop the top size fraction in going from plant 3 to both pl nt 2 and plant 4. In converting from plant 3 to plant 2 e S-classes must be expanded from 1 to 2. (Keyword CNCT and NDGS)

(iv) The mineral names are VALU and WSTE. (Keyword MINS)

(v) The first size class is the largest. (Keyword SIZE)

(vi) The specific gravity is given so that the grade related to volume can be calculated from the grade related to mass. (Keyword SPGR, GRDM)

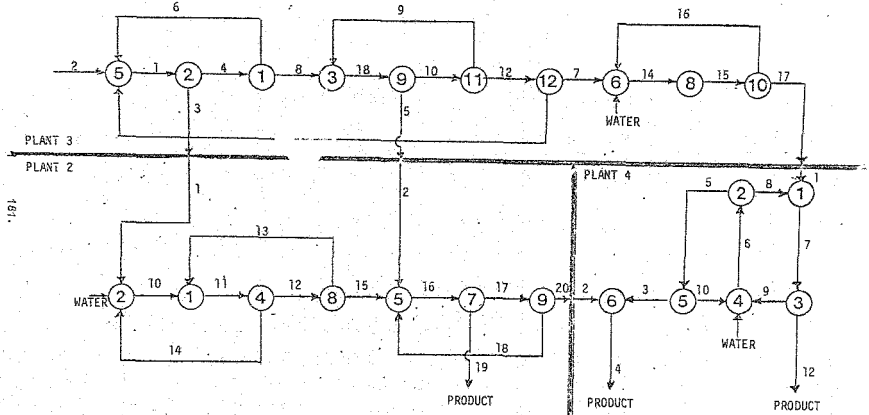

FIGURE 25 FLOW DIAGRAM - TEST EXAMPLE I

(vii) Physical property 3 is given directly. (Keyword PHYP)

(viii) Physical property 4 is given as values for each mineral species, then related to the 3 grade classes by inverse volume fractions. (Keyword PHYP, code 1004)

(b) Plant Data

(i) The stream connection matrix. (Keyword SCMA)

(ii) Fixed water feed and variable water feed. (Keyword WTRF)

(iii) Solid feed as mass fractions related to G, G and S-classes. (Keyword STRM) - plant 3 stream 2

(iv) Solid feed used to give the converter the information of how to expand to S-classes in plant 2, streams 1 and 2. (Keyword STRM)

(c) Run Data

(i) Plants 3 and 4 have two runs each

(ii) Use of TYPE keyword to give unit type and parameters

(iii) Use of COPY keyword to save repeating data

(iv) Use of default values of CONV, ITER, TOLM and OUTC

(v) Changing the unit parameters, convergence method, allowable iterations, and output code

(vi) Various uses of TRMP units. Basing separation on individual and combined classes

(vii) Variables for CRSH unit

16.3 Input Data Echo

In this section the results of many of the input data features are emphasized. The correct data reading, modification and echoing is also demonstrated. Besides the correct echoing of data which is easily verified some modifications of data by the computer are given below:-

(i) The volume fractions in each G-class have been calculated from the mass fractions of each mineral in each G-class and the specific gravities

(ii) The specific gravity has automatically become physical property 1, and expanded to fit the S-classes

(iii) Physical property 4 has been expanded according to inverse volume fractions (expansion code 1004)

e.g. $1.0/(\frac{.272}{20.0} + \frac{.728}{15.0}) = 16.92$

(iv) Stream mass flows of each category have been calculated from total mass flow and mass fractions

(v) The correct default values CONV = 3, ITER = 8, TOLM = 10^{-4} and OUTC = 0 0 0 1 0 0 1 6 6 8 are used when the value is not explicitly specified

(vi) The keyword COPY does copy the units requested correctly e.g. for plant 3 the parameters for unit 11 have been copied from those of unit 9, and so are identical

18.4 Results of ORDERING Subroutine

(See the computer display for these results).

Several conclusions can be drawn from these results, which have been displayed by the computer.

(i) The program correctly groups each maximal net into a node. These are:-

Plant 3 Node 1 Units 1,2,3,5,8,11,12
Plant 3 Node 2 Units 6,8,10
Plant 2 Node 1 Units 1,2,4,8
Plant 2 Node 2 Units 5,7,9
Plant 4 Node 1 Units 1,2,3,4,5
Plant 4 Node 2 Unit 6

(ii) Tears have been found for each node which are consistent with the weighting criteria. That is for plant 3 and 4 minimum number of tears, with no double tears. Plant 2, streams 13, 14 and 18 were given as preferential tears and these streams have been chosen as tears.

(iii) The unit order calculated is feasible and consistent with the tear streams, as starting with these feeds and tears all inputs are available to each of the units when it is their turn to calculate outputs.

18.5 Results of CALCULATION Phase

(See the computer display for these results).

(i) The important point to note from these results is the fact that the mass balance is true for the system, each plant node and each unit, and is consistent with the data. This mass

balance is true for total solids, solids in each category and water.

(ii) Another important result is that as the plant is linear it is expected that each complex node will converge in as many iterations as there are transformation classes. This can be seen to be the case as:-

Plant 3 Node 1 Converges in 1 iteration
Plant 2 Node 1 Converges in 1 iteration
and Plant 2 Node 2 Converges in 1 iteration
while Plant 3 Node 2 Converges in 4 iterations (there are 4 size classes and the CRSH unit transforms material between the 4 classes).

Plant 4 Node 1 uses direct substitution for the first three iterations, and although it is converging it does not reach the required tolerance within the allowed three iterations. In the second run, with different unit parameters, the reduced Newton method is used and the solids converge in 1 iteration and the second iteration is required to correct the non-linear water balance. It should be noted that if the water was fed to unit 1 instead of unit 4 then even though the solids will converge in one iteration the water balance will take several further iterations to converge. This is because once the solids converge the water in stream 7 and hence stream 9 will be fixed but the loop with streams 8, 5 and 10 will not be fixed and iteration is necessary to fix the water in stream 6, (the tear stream which will then fix the water flows in all the other streams in the node). By having the water feed on unit 4, once the solids converge the water in stream 6 is fixed and so in turn are the rest, which means only one further iteration is required to complete the mass balance. From a convergence point of view it is more efficient to use fixed water feeds, however if this is not possible the variable water feeds should feed units whose outputs are tear streams or directly connected to tear streams.

(iii) The ORDERING phase also calculated the dimensions of arrays, the paths for products of derivatives and indices for storage of arrays which are used in the calculation phase. The correct results obtained in this example show the correctness of the coding of the relevant sections of the ORDERING phase.

(iv) The conversion of plant 3 streams 3, 5 and 17 to plant 2 streams 1 and 2 and plant 4 stream 1, respectively is done properly. Stream 1 plant 2 is identical to stream 3 plant 3 in total solids and water as there is no mass in size class 1. The other two connections do have solids in size class 1 and this mass is lost according to the simulator. When a conversion of this type is made the user should check the loss and if it is significant take steps to improve the simulation. This can be done by either changing the feeding plant to ensure less material in the dropped size classes or alternatively including the size classes in the plant that is being fed.

(v) The operation of the converter in splitting plant 2 streams 1 and 2 from one to two S-classes is done properly.

(vi) The variable water feed to plant 4 is negative and hence to obtain the required 20% solids in stream 6 instead adding water to unit 4 it must be removed.

(vii) One of the main purposes of this example is to demonstrate the variety of output forms available to the user. Each run for each plant uses a different output code. In order to recognize the differences the output can be examined in conjunction with the relevant section on 'Usage of the Simulator' and the corresponding output code (chapter 14).

19 TEST EXAMPLE II

This example is based on the demonstration plant used by King (1973) in describing his flotation simulation. The flow diagram of this plant is given in figure 26.

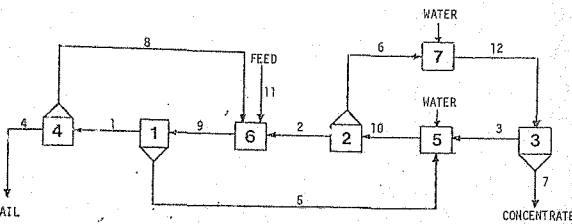

FIGURE 26 FLOW DIAGRAM - TEST EXAMPLE II

In this plant unit 1 is the rougher, unit 4 the scavenger, unit 2 the cleaner and unit 3 the recleaner. Each of these units which are modelled as single cells represent banks of cells in a real plant.

King's simulator uses a Newton Raphson procedure on the residence times of the cells to find a solution. This technique is completely different from the convergence method used in the general simulator. Using King's flotation model and the identical parameters exactly the same results were obtained. (i.e. the solids and water flows, the grades, recoveries in all streams, residence time and bubble loading in each cell). From this example it can be concluded that:-

(i) The general simulators coding is correct, as identical mass balance results are obtained.

(ii) The reduced Newton convergence technique works very satisfactorily on *non-linear* systems as well as linear ones. (This plant took 5 iterations to converge, compared to the two iterations that would have been taken if the cell model was linear - the second iteration is to calculate the variable water feeds).

(iii) The tearing and ordering subroutines operated correctly.

(iv) It should be noted that the King model does not provide for derivatives to the executive program and convergence is achieved using mass fractions to approximate the derivatives.

The actual computer printout is not presented as it adds nothing extra in the way of explanation.

20 TEST EXAMPLE III

In the previous two examples hypothetical plants were used to show that the coding of the simulator is correct and that the reduced Newton convergence method converges as expected on both linear and non-linear systems. This example takes a real plant to show that the simulator does work in a real situation. A convenient system is given in the literature by Sutherland (1977). He has used data measured by Cameron et al (1971) from the Broken Hill lead concentrator and added some of his own data to fit to his flotation plant simulator.

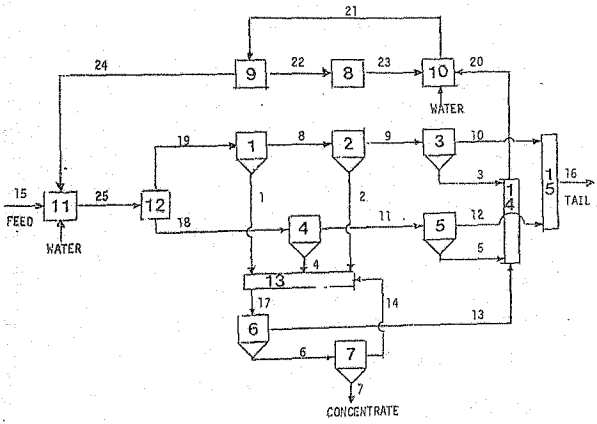

FIGURE 27 FLOW DIAGRAM - TEST EXAMPLE III

In figure 27 units 1 to 7 are banks of flotation cells. The number

of cells in each bank are 3, 3, 9, 7, 8, 4 and 3, respectively. Unit 8 is a comminution unit, unit 9 a cyclone, unit 12 a splitter and the rest mixers.

The flotation cell model is based on that of Sutherland and is described fully in the section on 'flotation modelling' (17.5). Sutherland (1977) in his paper uses a slow and fast flotation rate constant for each size/grade category. Four size and three grade classes have been used so that each stream has twenty four discrete categories (4 x 3 x 2) to describe the solids flow. The maximum concentrate flow for each cell is set, making the system non-linear.

Sutherland simply represented the regrind by defining a fixed size distribution of material being returned from the regrind, so that each mineral component feeding the regrind was redistributed according to this fixed distribution and then each size/mineral fraction was subdivided into fast and slow floating components as in the original feed material. This is clearly unsatisfactory from the point of view of a general purpose simulator. For this example the regrind is represented by a mill in closed circuit with a cyclone (units 8, 9 and 10). The mill is represented by a CRSH model with the added feature that breakage of slow floating galena results in the broken material becoming fast floating, while the breakage of fast floating zinc and gangue results in the broken material becoming slow floating. (The three G-classes being galena, marmatite and gangue).

The plant described was simulated using guessed parameters, it converged satisfactorily and the mass balance was correct. Unfortunately Sutherland did not publish the parameters used by him in his simulation so it was not possible to obtain the flows and recoveries presented by him. However the convergence and correct mass balance achieved by the simulator on a real system proves its effectiveness.

Once again the computer printouts will give no extra relevant information, so are not presented.

21 TEST EXAMPLE IV

Besides the normal design or simulation calculations the simulator can also be used to test theories about the relative merits of various processing schemes. An example of this is given by Engelbrecht (1977) who takes a conventional milling circuit (figure 28) and then claims on qualitative grounds that the circuit shown in figure 29, which has a lower total cost per ton of ore treated, will reduce the slimes produced while at the same time giving increased throughput.

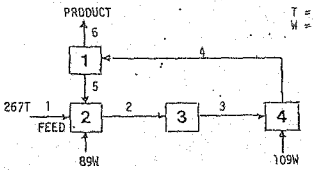

FIGURE 28 FLOW DIAGRAM - CONVENTIONAL MILLING CIRCUIT

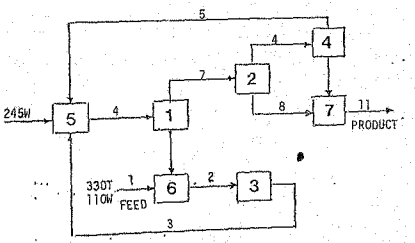

FIGURE 29 FLOW DIAGRAM - RECOMMENDED MILLING CIRCUIT

In figure 28 unit 3 is the mill and unit 1 the cyclone, unit 2 and 4 are mixers. In figure 29 unit 3 is the mill, units 1 and 2 cyclones, unit 4 a splitter and the rest mixers. For both cases the same feed size distribution was assumed. The residence time of the mill in the recommended flowsheet was set at 80% of that in the conventional circuit in accordance with the flows into each (for the same size mill). The cyclone parameters in both circuits were then adjusted until the claimed flows in both circuits were obtained. The % passing in size of the product stream was then plotted for each circuit. The results are shown in table 16 and graph 5 and it is clear that even at the increased throughput (330 t compared to 267 t) a much closer size distribution of product is obtained with far less -30µm material.

TABLE 16 RESULTS OF SIMULATION - EXAMPLE IV

SIZE µm	FEED % PASSING	CONVENTIONAL % PASSING	RECOMMENDED % PASSING
30	2.6	33.3	26.8
60	10.1	70.0	71.4
100	32.6	93.5	99.4
150	62.5	99.7	100.0
200	100.0	100.0	100.0

Therefore by using the simulator it has been possible to quantitatively demonstrate the theory which had only qualitative backing previously.

GRAPH 5 PERCENT PASSING VERSUS SIZE (TEST EXAMPLE IV)

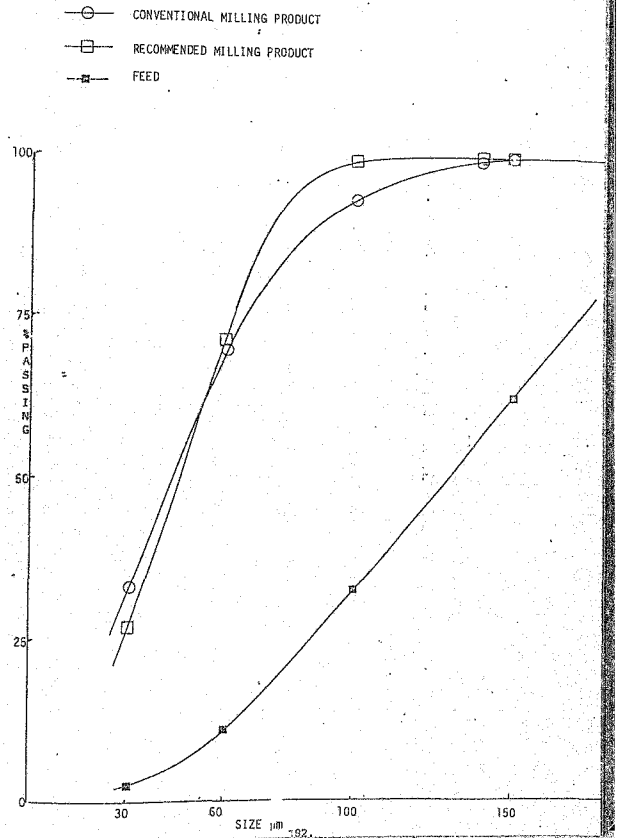

BIBLIOGRAPHY

LIST OF REFERENCES FOR PART I AND PART II

1. ANDREW, S.M. (1958) 'Computer flowsheets using Network 67: An Example' Trans Inst Chem Engrs, Vol 46, p T123 - T132.

2. ANDREW, S.M. (1969) 'Digital computers in the design of complete chemical processes' British Chemical Engineering, Vol 14, No. 8, p 1057-1062.

3. ANDREW, S.M. (1969) 'Computer modelling and optimization in the design of a complete chemical process' Trans Inst Chem Engrs, Vol 47, p T79-T84.

4. APOSTOL, T.M. (1974) *'Mathematical Analysis'* 2nd Ed, Addison Wesley.

5. BARKLEY, R.W. & MOTARD, R.L. (1972) 'Decomposition of nets' Chem Eng J, Vol 3, p 265-275.

6. BARNES, J.G.P (1965) 'An algorithm for solving non-linear equations based on the secant method' Computer J, Vol 8, p 66-72.

7. BATSTONE, D.B. & PRINCE, R.G.H (1970) 'Computer aided design, and its application to planning steam systems in sugar factories' Chemeca '70, p 107-120.

8. BOOK, N.L. & RAMIREZ, W.F. (1976) 'The selection of design variables in systems of algebraic equations' AIChE Journal, Vol 22, No. 1, p 55-66.

9. BRAUER, A. (1963) see Schnieder

10. BRIDDEL, E.T. (1974a) 'Process design by Computer Pt 1' Chemical Engineering Feb 4, p 60-63.

11. BRIDDEL, E.T. (1974b) 'Process design by Computer Pt 2' Chemical Engineering March 4, p 113-118.

12. BRIDDEL, E.T. (1974c) 'Process design by Computer Pt 3' Chemical Engineering April 4, p 77-84.

13. BROYDEN, C.G. (1965) 'A class of methods for solving non-linear simultaneous equations' Mathematics of Computation, Vol 19, p 577-593.

14. CAMERON, P.T. (1969) 'A language for chemical plant design and simulation programs' Comp J, Vol 12, No. 1, p 24-28.

15. CAVETT, R.H. (1963) 'Application of numerical methods to the convergence of simulated processes involving recycle loops', Proc Amer Petr Inst, Vol 43, p 57-76.

16. CHRISTENSEN, J.H. & RUDD, D.F. (1969) 'Structuring design computations' AIChE Journal, Vol 15, No. 1, p 94-105.

17. CHRISTENSEN, J.H. (1970) 'The structuring of process optimization' AIChE Journal, Vol 16, No. 2, p 177-184.

18. CROWE, C.M.; JOHNSON, A.I.; HAMIELEC, A.E.; SHANNON, P.T.; HOFFMAN, T.W.; WOODS, T.W. (1969) *'Chemical Plant Simulation'* McMaster University, Hamilton, Canada.

19. CROWE, C.M. & NISHIO, M. (1975) 'Convergence promotion in the simulation of chemical processes - The general dominant eigenvalue method' AIChE Journal, Vol 21, No. 3, p 528-533.

20. DENVER, (1962) *'Mineral Processing Flowsheets'* First Printing - Denver Equipment Company, Denver, Colorado.

21. EDIE, F.C. & WESTERBERG, A.W. (1971) 'Computer aided design Pt 3 - Decision variable selection to avoid hidden singularities in resulting recycle calculations', The Chemical Engineering Journal, Vol 2, p 114-124.

22. EDIE, F.C. & WESTERBERG, A.W. (1972) 'A potpourri of convergence and tearing', Chemical Engineering Computing, Vol 1, p 35-39.

23. EVANS, L.B. & SEIDER, W.D. (1970) 'The requirements of an advanced computing system', Chem Eng Progress, June, p 80-83.

24. EVANS, L.B.; STEWARD, D.G. & SPRAGUE, C.R. (1968) 'Computer aided chemical process design', Chem Eng Progress, April, Vol 64, No. 4, p 39-46.

25. FADDEEV, D.K. & FADDEEVA, V.N. (1963) *'Computational Methods of Linear Algebra'*, W.H. Freeman and Company, San Francisco.

26. FLOWER, J.R. & WHITEHEAD, B.D. (1973) 'Design: A survey of flowsheeting programs Part 1', The Chemical Engineer, April, p 208-210.

27. FLOWER, J.R. & WHITEHEAD, B.D. (1973) 'Computer aided design: A survey of flowsheeting programs Part 2', The Chemical Engineer, May, p 271-277.

28. FORDER, G.J. & HUTCHINSON, H.P. (1969) 'The analysis of chemical plant flowsheets', Chemical Engineering Science, Vol 24, p 771-785.

29. FRIEDMAN, F. & RAMIREZ, W.F. (1973) 'Convergence properties of systems of algebraic equations - explicit loops', AIChE Journal, Vol 19, No. 3, p 566-574.

30. GENNA, P.C. & MOTARD, R.L. (1975) 'Optimal decomposition of process networks', AIChE Journal, Vol 21, No. 4, p 656-663.

31. GUPTA, P.K.; WESTERBERG, A.W.; HENDRY, J.E. & HUGHES, R.R. (1974) 'Assigning output variables to equations using linear programming' AIChE Journal, Vol 20, No. 2, p 397-399.

32. HARARY, F. (1959) J. Math Phys, Vol 38, p 144 quoted from Kehat and Shacham (1973b).

33. HARARY, F. (1960) J. ACM, Vol 7, p 155 quoted from Kehat and Shacham (1973b).

34. HENLEY, E.J. & ROSEN, E.M. (1969) *'Material and Energy Balance Computations'*, John Wiley & Sons Inc, New York.

35. HENS, A.M. (1965) 'Non-linear models for optimisation of refinary processes', AIChE - I. Chem E. Symposium Series No. 4, (London Instn Chem Engrs).

36. HIMMELBLAU, D.M. (1966) 'Decomposition of large scale systems - systems composed of lumped parameter elements', Chem Eng Sci, Vol 21, p 425-436.

37. HIMMELBLAU, D.M. (1967) 'Decomposition of large scale systems - systems containing non-linear elements', Chem Eng Sci, Vol 22, p 883-895.

38. HIMMELBLAU, D.M. & BISCHOFF, KB. (1968) '*Process Analysis and Simulation Deterministic Systems*', John Wiley & Sons Inc, New York.

39. HUSSAIN, A. (1975) 'Computer aided process synthesis and analysis: Pt 1 Synthesis', J. Scient Ind Res, Vol 34, August, p 439-442.

40. HUSSAIN, A. (1975) 'Computer aided process synthesis and analysis: Pt 2 Analysis', J. Scient Ind Res, Vol 34, August, p 443-450.

41. HUTCHISON, H.P. & LEESLEY, M.E. (1973) 'A balanced approach to process design by computer', Computer Aided Design, Vol 5, No. 4, p 228-233.

42. HUTCHISON, H.P. (1974) 'Plant simulation by linear methods' Trans Instn Chem Engrs, Vol 52, p 287-290.

43. JAIN, Y.V.S. & EAKMAN, J.M. (1972) 'Identification of process flow networks', Chemical Engineering Computing, Vol 2, p 40-50.

44. JOHNSON, A.I. (1972a) 'Computer aided process analysis and design - a modular approach', Brit Chem Eng & Proc Tech, Vol 17, No. 1, p 28-33.

45. JOHNSON, A.I. (1972b) 'Applications of the modular approach requiring iterative procedure', Brit Chem Eng & Proc Tech, Vol 17, No. 2, p 119-122.

46. JOHNSON, A.I. (1972c) 'The modular approach applied to the unsteady state behaviour of systems', Brit Chem Eng & Proc Tech, Vol 17, No. 3, p 217-223.

47. JOHNSON, D.B. (1975) 'Finding all the elementary circuits of a directed graph', SIAM J. Comput, March, Vol 4, No. 1, p 77 - 84.

48. KATO, A.; NISHIHARA, K.; YAMAZAKI, M.; KASAHARA, T. & WADA, T. (1974) 'PBDS - process basic design system', Computer Aided Design, Vol 7, No. 2, p 93-100.

49. KEHAT, E. & SHACHAM, M. (1973a) 'Chemical process simulation programs - 1', Process Technology International, January/February, Vol 18, No. 1/2, p 35-37.

50. KEHAT, E. & SHACHAM, M. (1973b) 'Chemical process simulation programs - 2, partitioning and tearing of system flowsheets', Process Technology International, March, Vol 18, No. 3, p 115-118.

51. KEHAT, E. & SHACHAM, M. (1973c) 'Chemical process simulation programs - 3, solution of system of non-linear equations', Process Technology International, April/May, Vol 18, No 4/5, p 181-184.

52. KESLER, M.G. & GRIFFITHS, P.R. (1963) 'A computer system for process simulation', Proceedings American Petroleum Institute, Vol 43, p 49-56.

53. KING, R.P. (1975) 'Simulation of ore dressing plants', Journal of SA Institute of Mining & Metallurgy, October, p 152-156.

54. KLIMPEL, R.R. (1989) 'Some recent advances in the use of mathematical optimization in the mineral industries', Min Sci Engng, Vol 1, p 15-23.

55. KOMATSU, S (1966) 'Application of linearization to design of a hydrodealkylation plant', Industrial & Engineering Chemistry, Vol 80, No. 2, p 36-43.

56. KUBICEK, M.; HLAVACEK, V. & PROCHAZKA, F. (1976) 'Global modular Newton Raphson technique for simulation of an interconnected plant applied to complex rectification columns', Chem Eng Sci, Vol 31, p 277-284.

57. LAPIDUS, L. (1962) *'Digital Computation for Chemical Engineers'* McGraw Hill.

58. LEDERMAN, P.B. (1966) 'Flowsheet simulation and beyond', Chemical Engineering, December 2, p 127-132.

59. LEDET, W.P. & HIMMELBLAU, D.M. (1970) 'Decomposition of procedures for the solving of large scale systems', Advances in Chem Eng, Vol 8, p 185-254.

60. LEE, K.F.; MASSO, A.H. & RUDD, D.F. (1970) 'Branch and bound synthesis of integrated process design', I & EC Fundamentals, Vol 9, No. 1, p 48-58.

61. LEE, W.D. & RUDD, D.F. (1966) 'On the ordering of recycle calculations' AIChE Journal, Vol 12, No. 6, p 1184-1190.

62. LEESLEY, M.E. (1973) 'Process plant design by computer', Process Technology International, Vol 18, No. 11, p 403-405.

63. MAH, R.S.H. & RAFAL, M. (1971) 'Automatic generation in chemical engineering computation', Trans Instn Chem Engrs, Vol 49, p 101-108.

64. MAH, R.S.H. (1974) 'A constructive algorithm for computing the reachability matrix', AIChE Journal, Vol 20, No. 5, p 1227-1228.

65. MATETI, P. & DEO, N. (1976) 'On algorithms for enumerating all circuits of a graph', SIAM J. Comput, Vol 5, No. 1, p 90-99.

66. MORE, JJ. & TRANGENSTEIN, J.A. (1976) 'On global convergence of Broyden's method', Mathematics of Computation, Vol 30, No. 135, p 523-540.

67. MOTARD, R.L., SHACHAM, M. & ROSEN, E.M. (1975) 'Steady state chemical process simulation', AIChE Journal, Vol 21, No. 3, p 417-436.

68. NAPHTALI, L.M. (1964) 'Process heat and material balances', Chemical Engineering Progress, Vol 60, No. 9, p 70-74.

69. NAPHTALI, L.M. & SANDHOLM, D.P. (1971) 'Multicomponent seperation calculations by linearization', AIChE Journal, Vol 17, No. 1, p 148-153.

70. NAGIEV, M.F. (1957) 'Material balance in complex and multistage recycle chemical processes', Chem Engng Progress, Vol 53, No. 8, p 387-393.

71. NAGIEV, M.F. (1964) '*The Theory of Recycle Processes in Chemical Engineering*', Int Series of Monographs on Chem Eng, Ed. Danckwerts, Vol 3, Pergeman Press, London.

72. NISHIMURA, H., HIRAIZUMI, Y. & YAGI, S. (1968) 'Optimization of a process network by the linear model method', International Chem Engineering, Vol 8, No. 1, p 186 - 194.

73. NORMAN, R.L. (1965) 'A matrix method for location of cycles of a directed graph', AIChE Journal, Vol 11, No. 3, p 450-452.

74. ORBACH, O. & CROWE, C.M. (1971) 'Convergence promotion in the simulation of chemical processes with recycle - the dominant eigenvalue method', Canadian Journal of Chemical Engineering, August, Vol 49, p 509-513.

75. ORBACH, O., CROWE, C.M. & JOHNSON, A.I. (1972) 'Multicomponent seperation calculations by the modified form of Newton's method' Chemical Engineering Journal, Vol 3, p 176-186.

76. ORTEGA, J.M. & RHEINBOLDT, W.C. (1970) '*Iterative Solution of Nonlinear Equations in Several Variables*', Academic Press, New York.

77. PEDERSEN, W.S. & GURUN, T. (1970) 'Unit operations design programs' Mining Congress Journal, Vol 56, No. 11, p 80 - 86.

78. PETERS, N. & BARKER, P.E. (1974) 'An appraisal of the use of PACER, GEMCS and CONCEPT for chemical plant simulation and design', The Chemical Engineer, March, p 149-157.

79. PHO, T.K. & LAPIDUS, L. (1973) 'Topics in computer aided design - An optimum tearing algorithm for recycle systems' AIChE Journal, Vol 19, No. 6, p 1170-1181.

80. RAFAL, M. & ZEMAITES, J.F. (1976) 'Automatic computer program generation', Chem Eng Progress, April, p 87-88.

81. RAMIREZ, W.F. & VESTAL, C.R. (1972) 'Algorithms for structuring design calculation', Chem Eng Sci, Vol 27, p 2243-2254.

82. RAVICZ, A.E. & NORMAN, R.L. (1964) 'Heat and mass balancing on a digital computer', Chemical Engineering Progress, Vol. 60, No. 65 p 71-76.

83. READ, R.C. & TARJAN, R.E. (1975) 'Bounds on backtrack algorithms for listing cycles, paths and spanning trees', Networks 5, p 237-252.

84. RINARD, I.H. & RIPPS, D.L. (1965) 'The steady state simulation of continuous chemical processes', Chem Eng Progress Symposium Series Vol 61, No. 55, p 34-41.

85. ROSEN, E.M. (1962) 'A machine computation method for performing material balances', Chem Eng Progress, Vol 58, No. 10, p 69-73.

86. ROSEN, E.M. (1967) 'A review of quasi-Newton methods in non-linear equation solving and unconstrained optimization', Association for Computing Machinery, Proc of the 21st National Conf, p 37-41.

87. RUBIN, D.I. (1967) 'Generalized material balance', Chem Eng Progress Symposium Series, Vol 58, No. 37, p 54-61.

88. RUDIN, W. (1954) *'Real and Complex Analysis'*, McGraw Hill.

89. SARGENT, R.W.H. & WESTERBERG, A.W. (1964) 'Speed Up in chemical engineering design', Trans Instn Chem Engrs, Vol 42, p T190-T197.

90. SARGENT, R.W.H. (1967) 'Integrated design and optimization of processes', Chem Eng Progress, Vol 63, No. 9, p 71-78.

91. SARGENT, R.W.H. (1968) 'Developments in computer aided process design', The Chemical Engineer, December, p CE424-CE427.

92. SARGENT, R.W.H. (1972) 'Forecasts and trends in systems engineering', The Chemical Engineer, June, p 226-230.

93. SCHNIEDER, H. (1964) *'Recent Advances in Matrix Theory'*, Proceedings of advanced seminar conducted by the maths research centre, U.S. army, at the Univ of Wisconsin, Madison, Oct 14-16, Univ of Wisconsin Press, Madison & Milwaukee.

94. SCHUBERT, L.K. (1970) 'Modification of a quasi-Newton method for non-linear equations with a sparse Jacobian', Math Comp, Vol 24, p 27-30.

95. SCRIMGEOUR, J.H.C.; HAMILTON, R.E. & TOONG, T. (1970) 'The use of mathematical modelling in developing advanced control systems for mining industry processes', CIM Bulletin, October, p 1181-1190.

96. SEIDER, W.D. (1972) 'Computer-aided analysis and design packages', Chemical Engineering Computing, Vol 2, p 32-39.

97. SHACHAM, M. & KEHAT, E. (1973) 'Convergence interval methods for the iterative solution of a non-linear equation', Chem Eng Sci, Vol 28, p 2187-93.

98. SHACHAM, M. & MOTARD, R.L. (1974) 'Applications of the theory of linear recycle systems', presented at 78th AIChE National Meeting Salt Lake City, Utah, August 18-21, Session 1d.

99. SHANNO, D.F. (1970) 'Conditioning of quasi-Newton methods for function minimization', Mathematics of Computation, Vol 24, No. 111, p 647-656.

100. SHANNO, D.F. & KETTLER, P.C. (1970) 'Optimal conditioning of quasi-Newton methods', Mathematics of Computation, Vol 24, No. 111, p 657-664.

101. SHANNON, P.T.; JOHNSON, A.I.; CROWE, C.M.; HOFFMAN, T.W.; HAMIELEC, A.E. & WOODS, D.R. (1968) 'Computer simulation of a sulphuric acid plant', Chem Eng Prog, Vol 62, No. 6, p 49-59.

102. SIIROLA, J.J.; POWERS, G.J. & RUDD, D.F. (1971) 'Synthesis of system design - Process concept generator' AIChE Journal, Vol 17, No. 3, p 677-682.

103. SIIROLA, J.J. & RUDD, D.F. (1971) 'Computer-aided synthesis of chemical process designs', Ind Eng Chem Fundam, Vol 10, No. 3, p 353-362.

104. SOYLEMEZ, S. & SEIDER, W.D. (1972) 'The chemical engineer - process analysis and design system interface', Chemical Engineering Computing, Vol 2, p 76-83.

105. SOYLEMEZ, S. & SEIDER, W.D. (1972) 'Computer generated FORTRAN programs for material and energy balancing process units', Chem Eng Computing, Vol 2, p 162-176.

106. SOYLEMEZ, S. & SEIDER, W.D. (1973) 'A new technique for precedence ordering chemical process equation sets', AIChE Journal, Vol 19, No. 5, p 934-942.

107. STEWARD, D.V. (1962) 'On an approach to techniques for the analysis of the structure of large systems of equations', SIAM Review, Vol 4, No. 4, p 321-342.

108. STEWARD, D.V. (1965) 'Partitioning and tearing systems of equations' J SIAM Numer Anal Ser B, Vol 2, No. 2, p 345-365.

109. STADTHERR, M.A.; GIFFORD, W.A. & SCRIVEN, L.E. (1974) 'Efficient solution of sparse sets of design equations', Chem Eng Sci, Vol 29, p1025-1034.

110. TAUSKY, O. See Schneider (1964)

111. TIERNAN, J.C. (1970) 'An efficient search algorithm to find the elementary circuits of a graph', Communication of the ACM, Vol 13, No. 12, p 722-26.

112. TARJAN, R. (1972) 'Depth first search and linear graph algorithms' SIAM J Comput, Vol 1, No. 2, p 146-160.

113. TARJAN, R. (1973) 'Enumeration of the elementary circuits of a directed graph', SIAM J Comput, Vol 2, No. 3, p 211-218.

114. UMEDA, T. & NISHIO, M. (1972) 'Comparison between sequential and simultaneous approaches in process simulation', Ind Eng Chem Process Des Develop, Vol 11, No. 2, p 153-160.

115. UPADYE, R.S. & GRENS, E.A. (1972) 'An efficient algorithm for optimum decomposition of recycle systems', AIChE Journal, Vol 18, No. 3, p 533-539.

116. UPADYE, R.S. (1974) 'Selection of decompositions for simulation of chemical processes', PhD thesis Univ California, Berkeley.

117. UPADYE, R.S. & GRENS, E.A. (1975) 'Selection of decomposition for chemical process simulation', AIChE Journal, Vol 21, No. 1 p 136-142.

118. VACLAVEK, V. (1972) 'Testing of over- and under determination of problem formulations for simulation calculations of a complex chemical process', Chem Eng Sci, Vol 27, p 1869-1876.

119. VARGA, R.S. (1962) '*Matrix Iterative Analysis*', Prentice Hall Inc Englewood Cliffs, New Jersey.

120. VELA, M.A. (1961) 'Use fractions for recycle balances', Hydrocarbon Processing, Vol 40, p 247-250 (May 1961 Petroleum Refiner).

121. VELA, M.A. (1961) 'Use fractions for recycle balances', Hydrocarbon Processing, Vol 40, No. 6, p 189-193 (June 1961).

122. WEGSTEIN, J.H. (1958) 'Accelerating convergence of iterative processes', Communication of the ACM, Vol 1, p 9-13.

123. WEINBLATT, H. (1972) 'A new search algorithm for finding the simple cycles of a finite directed graph', Journal of the Association for Computing Machinery, Vol 19, No. 1, p 43-56.

124. WESTERBERG, A.W. & EDIE, F. (1971) 'Computer aided design Pt 1, Enhancing convergence properties by the choice of output variable assignments in the solution of sparse equation sets', Chemical Engineering, Vol 2, p 9-18.

125. WESTERBERG, A.W. & EDIE, F. (1971) 'Computer aided design Pt 2, An approach to convergence and tearing in the solution of sparse equation sets', Chemical Engineering, Vol 2, p 17-25.

126. WILLIAMS, T.J. (1972) 'Computing in chemical engineering operations: Its place, its successes, its probable future developments', Chemical Engineering Computing, Vol 2, p 85-94.

127. WORLEY, F.L. & MOTARD, R.L. (1972) 'Information systems in chemical engineering design', Chemical Engineering Computing, Vol 2, p 4-24.

128. WYLIE, C.R. (1960) '*Advanced Engineering Mathematics*', 3rd Edition, McGraw Hill.

129. ZELEZNIK, F.J. (1968) 'Quasi-Newton methods for non-linear equations' Journal of ACM, Vol 15, No. 2, p 265-271.

LIST OF REFERENCES FOR PART III AND PART IV

1. ADORJAN, L.A. (1976) 'Determination of thickener dimensions from sediment compression and permeability test results', IMM Trans, Vol 85, p C157-C163.

2. ANDRES, U. (1975) 'Magnetohydrodynamic and magnetohydrostatic separation - a new prospect for mineral separation in the magnetic field' Min Sci Engng, Vol 7, No. 2, p 99-108.

3. ANDREW, J.R.G. & MIKA, T.S. (1975) 'Comminution of heterogeneous material: development of a model for liberation phenomena' 11th Int Min Proc Cong - Cagliari, Paper 3.

4. ARBITER, N. & HARRIS, C.C. (1962) '*Flotation Kinetics*', Froth flotation, 50th Anniversary volume, Ed. D.W. Fuerstenau AIME, New York.

5. AUSTIN, L.G. (1971/2) 'A review - Introduction to the mathematical descriptions of grinding as a rate process', Powder Technology, Vol 5, p 1-17.

6. AUSTIN, L.G. (1977) '*Grinding Theory and Practice*', SAIMM Vacation School, Univ of Witwatersrand, 8-12th August.

7. AUSTIN, L.G.; LUCKIE, P.T. & KLIMPEL, R.R. (1972) 'Solution to the batch grinding equation leading to Rosin-Rammler distributions' Trans AIME, Vol 252, p 87-94.

8. AUSTIN, L.G.; LUCKIE, P.T. & WIGHTMAN, D. (1975) 'Steady state simulation of a cement milling circuit', Int J Min Proc, Vol 2, p 127-150.

9. AUSTIN, L.G.; SHOJI, K.; BHATIA, V.K. & APLAN, F.F. (1974) 'Extension of the expirical Alyevdin equation for representing batch grinding data', Int J Min Proc, Vol 1, p 107-123.

10. BARTLETT, D.R., MULAR, A.L. (1974) 'Dependence of flotation rate on particle size and fractional mineral content', Int J Min Proc, Vol 1, p 277-288.

11. BENNET, J.G. (1936) J Inst Fuel (London), Vol 10, p 34, quoted from Austin (1971).

12. BLAKE, J.R. & COLOMBERRA, P.M. (1977) 'Sedimentation: A comparison between theory and equipment', Chem Eng Sci, Vol 32, p 221-228.

13. BRADLEY, D. (1958) 'Theoretical study of the hydraulic cyclone', Industr Chem, September, p 473- quoted from Pownall (1960).

14. BRERETON, T. (1970) 'Performance measurement of a screening process using statistical techniques - Part 1', Quarry Managers Journal, September, p 344-346.

15. BRERETON, T. & DYMOTT, K.R. (1973) 'Some factors which influence screen performance', 10th Int Min Proc Cong, London, p 181-194.

16. BROADBENT, S.R. & CALCOTT, T.G. (1956) Phil Trans Roy Soc, London, Vol 249, p 99-123, quoted from Austin (1977).

17. BULL, W.R. (1969) quoted from Mular A.R. and Bull W.R. '*Mineral Processes. Their Analysis, Optimization and Control*', Course Notes, 1969-1973.

18. BURT, R.O. (1975) 'Development of the Bartles crossbelt concentrator for the gravity concentration of fines', Int J Min Proc, Vol 2, p 219-234.

19. BURT, R.O. & DTTLEY, D.J. (1974) 'Fine gravity concentration using the Bartles-Mozley concentrator', Int J Min Proc, Vol 1, p 347-368.

20. CALANGO, E.M. & GEIGER, G.H. (1973) 'A note on screening probability', Ind Eng Chem Proc Des Dev, Vol 12, No. 3, p 395-398.

21. CAMERON, A.W., KELSALL, D.F., RESTARICK, C.J. & STEWART, P.S.B. (1971) 'A detailed assessment of concentrator performance at Broken Hill South Ltd, Proc Aust Inst Min Metall, No. 240, p 53-67.

22. CARTA, M., FERRARA, G.F., DEL FA, C. & ALFANA, G. (1964) 'Contribution to the electrostatic separation of minerals', 7th Int Min Proc Cong, New York, part 8, p 427-446.

23. CHASTON, I.R.M. (1958) 'A simple formula for calculating the approximate capacity of a hydrocyclone', IMM Trans, Vol 67, No. 5, p 203- quoted from Pownall (1980).

24. COE, H.S. & CLEVENGER, G.H. (1916) 'Methods for determining the capacities of slime settling tanks', Trans AIME, Vol 60, p 356-384, quoted from Fuerse (1977).

25. DAHLSTROM, D.A. (1954) 'Fundamentals and applications of the liquid cyclone', Chem Eng Progress Symposium, Series No. 15, Vol 50, p 41, quoted from Pownall (1980).

26. DAVIS, W.J.N. (1984) 'Development of a mathematical model of the lead flotation circuit at Zinc Corporation Ltd' Proceeding Aust Inst Min and Metall, Vol 212, p 81-89.

27. DE KOK, S.K. (1977) 'Grinding theory and practice', SAIMM Vacation School, Univ of Witwatersrand 8-12 August.

28. EYSSA, Y. & BOOM, R.W. (1976) 'Magnetic and coagulation forces on a suspension of magnetic particles', Int J Min Proc, Vol 3, p 1-8.

29. ENGELBRECHT, J.A. (1977) 'The effect of classification efficiency milling and its economic significance', SAIMM vacation school, Univ of Witwatersrand 18-12 August, p 148-191.

30. FERRARA, G, & PRETI, U. (1975) 'A contribution to screening kinetics', 11th Int Min Proc, Cong - Cagliari, Paper 7.

31. FITCH, B. (1968) 'The design of intermittently fed thickeners' Ind & Eng Chem, Vol 60, No. 7, p 8-14.

32. FLINT, L.R. (1974) 'A mechanistic approach to flotation kinetics', IMM Trans, Vol 83, p C90-C95.

33. FOURNIER, R.D. & SMITH, H.W. (1972) 'Experimental parameter identification for a dynamic model of a rod mill', CIM Bull, December, p 78-82

34. FUERSTENAU, D.W. (1976) Editor *'Flotation'*, A.M. Gaudin, memorial volume, Volume 2, AIME.

35. GAUDIN, A.M. (1939) 'Principles of mineral dressing', McGraw Hill, New York, p 141-164, quoted from Brereton and Dymott (1970).

36. GAUDIN, A.M. (1971) 'The principles of electrical processing with particular application to electrostatic separation', Min Sci Engng, Vol 3, p 45-57.

37. GAUDIN, A.M. (1974) 'Progress in magnetic separation using high intensity, high gradient separators', Min Cong J, Vol 60, No. 1, p 18-21.

38. GAUDIN, A.M. & MELOY, T.P. (1962) Trans AIME, Vol 223, p 407- quoted from Austin (1971).

39. GRAVES, R.A. (1973) 'The Reichert Cone Concentrator', Min Cong J, Vol 59, No. 6, p 24-28.

40. GURUN, T. (1972) 'Designing of crushing plant flowsheets by simulation', Application of computer methods in the mining industry, Proc 10th Int Symp, Publ SAIMM, Johannesburg 1973.

41. HALL-CARPENTER, J. (1970) 'Electrical methods for the separation of minerals', Min Sci Engng, Vol 2, p 23-30.

42. HARRIS, C.C. (1972) 'Graphical representation of classifier-corrected performance curves', IMM Trans, Vol 81, p C243-C245.

43. HARRIS, CC. (1976) 'A recycle flow flotation machine model; response of model to parameter changes', Int J Min Proc, Vol 3, p 9-25.

44. HARRIS, C.C., CHAKRAVARTI, A. & DEGALEESAN, S.N. (1975) 'A recycle flow flotation machine model', Int J Min Proc, Vol 2, p 39-50.

45. HASSET, N.J. (1969) 'Thickening in theory and practice', Min Sci Engng, Vol 1, p 24-36.

46. HAWKER, T.G. (1974) 'Magnetic and electrostatic techniques in mineral dressing', Mine and Quarry, Vol 3, No. 10, p 51-57.

47. HAWKER, T.G. (1974) 'Magnetic and electrostatic techniques in mineral dressing', Mine and Quarry, Vol 3, No. 11, p 39-45.

48. HERBST, J.A.; GRANDY, G.A. & FUERSTENAU, D.W. (1973) 'Population balance models for the design of continuous grinding mills', 10th Int Min Proc Cong - London, p 23-45.

49. HERBST, J.A. & FUERSTENAU, D.W. (1973) 'Mathematical simulation of dry ball milling using specific power information', Trans AIME, Vol 254, p 343-348.

50. HERBST, J.A. & KIM, J.A. (1973) 'Nearly equal selection functions in linear size discretized grinding models', IMM Trans, Vol 82, p C169-C173.

51. HERBST, J.A. & MIKA, T.S. (1970) 'Mathematical simulation of tumbling mill grinding: an improved method', 9th Int Min Proc Cong-Prague, Vol 3, p 27-37.

52. HOPSTOCK, D.M. (1975) 'Fundamental aspects of design and performance of low intensity dry magnetic separators', Trans AIME, September, p 222-227.

53. HORST, W.E. & OYRENFORTH, W.P. (1971) 'Wet high intensity magnetic separation of industrial minerals', Mining Engineering, March, p 57-59.

54. HUYET, G. (1975) 'Mathematical model of wet grinding of ores', 11th Int Min Proc Cong - Cagliari, Paper 4.

55. IMAIZUMI, T. & INOUE, T. (1963) 'Kinetic consideration of froth flotation', 6th Int Min Proc Cong - Cannes, p 581-599.

56. IMAIZUMI, T. & INOUE, T. (1968) 'Some aspects of flotation kinetics', 8th Int Min Proc Cong - Leningrad, Paper S12.

57. JOWETT, A. (1971) 'An introduction to the assessment of energy requirements and product size in comminution', Min Sci Engng, Vol 14, p 33-43.

58. JOWETT, A.; PICKLES, J.G. & WILLIAMS, P.A. (1971) 'Application of mathematical models of flotation', Symposium on automatic control systems in mineral process plants - Aust Int Min and Metall - Brisbane, p 197-212.

59. KARRA, V.K. & FUERSTENAU, D.W. (1977) 'The scale up of grade discharge continuous ball mills', Int J Min Proc, Vol 4, p 1-6.

60. KELSALL, D.F. (1952) 'The study of the motion of solid particles in a hydraulic cyclone', IMM Trans, Symposium on recent developments in mineral dressing, p 209, quoted from Pownell (1960).

61. KELSALL, D.F. (1953) 'A further study of the hydraulic cyclone', Chem Eng Sci, Vol 2, p 254, quoted from De Kok (1977).

62. KELSALL, D.F. (1961) 'Application of probability in the assessment of flotation systems', Bull Instn Min Met, p 191, quoted from Davis (1964).

63. KELSALL, D.F. (1964) 'A study of breakage in a small continuous open circuit wet ball mill', 7th Int Min Proc Cong-New York. part 1, p 33-42.

64. KELSALL, D.F. & STEWART, P.S.B. (1971) 'A critical review of application of models of grinding and flotation', Australian IMM, Symposium on automatic control systems in mineral processing plants', 17-20 May, p 213-232.

65. KING, R.P. (1972) 'Model for the design and control of flotation plants', Proc 10th Int Symp on applications of computer methods in the mineral industries, publ SAIMM, Johannesburg 1973.

66. KING, R.P. (1975) 'Simulation of flotation plants', AIME, Trans, Vol 250, p 286-293.

67. KING, R.P. (1977) 'Automatic sorting of ores' to be published .

68. KING, R.P., WOODBURN, E.T. & JOCHENS, P.R. (1973) 'A computer program for the simulation of the performance of a flotation plant', Revised report, NIM project report 3, report number 1436, 3 August.

69. KLIMPEL, R.R. & AUSTIN, L.G. (1977) 'The back calculation of specific rates of breakage and non-normalized breakage distribution parameters from batch grinding data', Int J Min Proc, Vol 4, p 7-32.

70. KOS, P. (1974) 'Gravity thickening of water treatment plant sludges', 94th Annual Conference AWWA-Boston, June, quoted from Pearse (1977).

71. KYNCH, C.J. (1952) 'A theory of sedimentation', Trans Faraday Soc, Vol 48, p 166-176, quoted from Pearse (1977).

72. LAWVER, J.E. & HOPSTOCK, D.M. (1974) 'Wet magnetic separation of weakly magnetic minerals', Min Sci Engng, Vol 8, No. 3, p 154-172.

73. LILGE, E.O. (1962) 'Hydrocyclone fundamentals', IMM Trans, Vol 71, p 285- quoted from Plitt (1976).

74. LOVEDAY, B.K. (1966) 'Analysis of froth flotation kinetics', IMM Trans, Vol 75, p C219-C255, quoted from Woodburn (1970).

75. LOVEDAY, B.K. (1970) 'Reduction of gravity or inertial seperation efficiencies from heavy liquid tests and Tromp type efficiency curves - an empirical method', IMM Trans, Vol 79, p C137-C140.

76. LOVEDAY, B.K. & MARCHANT, G.B. (1972) 'Simulation of multicomponent flotation plants', Proc 10th Int Symp of Application of Computer Methods in the Mineral Industries, Publ SAIMM, Johannesburg 1973.

77. LUCKIE, P.T. & AUSTIN, L.G. (1972) 'A review: Introduction to the solution of the grinding equations by digital computation', Min Sci Engng, Vol 4, No. 2, p 24-51.

78. LUCKIE, P.T. & AUSTIN, L.G. (1973) 'Techniques for derivation of selectivity functions from experimental data', 10th Int Min Proc Cong - London, p 773-780.

79. LYNCH, A.J. (1965) 'The characteristics of hydrocyclones and their application as control units in comminution circuits', Progress Report No. 6, Dept Min & Met, Univ of Queensland, quoted from Flitt (1976).

80. LYNCH, A.J.; RAO, T.C. & PRISBY, R.A. (1974) 'The influence of hydrocyclone diameter on reduced efficiency curves', Int J Min Proc, Vol 1, p 173-181.

81. LYNCH, A.J. & RAO, T.C. (1975) 'Modelling and scale up of hydrocyclone classifiers', 11th Int Min Proc Cong - Cagliari paper 9.

82. LYNCH, A.J.; RAO, T.C. & BAILEY, C.W. (1975) 'The influence of design and operating variables on the capacities of hydrocyclone classifiers', Int J Min Proc, Vol 2, p 29-37.

83. [illegible]AY, J.C. & LLOYD, P.J.D. (1975) 'Progress in assessing plant [illegible]ating data', J SAIMM, October, p 162-172.

84. MAYER, F.W. (1964) 'Fundamentals of a potential theory of the jigging process', 7th Int Min Proc Cong - New York, part 2, p 75-86.

85. MEHROTRA, S.P. & KAPUR, P.C. (1975) 'The effects of particles size and feed rate on the flotation rat distribution in a continuous cell', Int J. Min Proc, Vol 2, p 15-28.

86. MELOY, T.P. & BERGSTROM, B.H. (1964) 'Matrix simulation of ball mill circuits considering impact and attrition grinding', 7th Int Min Proc Cong - New York, part 1, p 19-31.

87. MICHELL, F.G. & OSBORNE, D.G. (1975) 'Gravity concentration in modern mineral processing', Chemistry and Industry, 18 Jan, p 58-68.

88. MIKA, T.S. (1976) 'A solution to the distributed parameter model of a continuous grinding mill at steady state', Chem Eng Sci, Vol 3, No. 1, p 257-262.

89. MIKA, T.S. & FUERSTENAU, D.W. (1969) 'A microscopic model of the flotation process', 6th Int Min Proc Cong - Leningrad, Vol 2, paper S4.

90. MORRISON, R.D. (1974) 'Review of high tension roll separators', Julius Kruttschnitt Mineral Research Centre - Technical Report, 1st Jan to 30th June.

91. MULAR, A.L. (1972) 'Empirical modelling and optimization of mineral processes', Min Sci Engng, Vol 4, No. 3, p 30-42.

92. MULAR, A.L. & BULL, W.R. (1969) 'Mineral processes- their analysis optimization and control', notes to summer school, Johannesburg 1969-1973.

93. MULAR, A.L. & RUNNELS, D.F. (1972) 'Reduced efficiency equations for classifiers', Canadian Met Quart, Vol 11, No. 3, p 549-552.

94. MULLER, L.D., SAYLES, C.P. & MOZLEY, R.H. (1964) 'A pulsed deck gravity concentrator and comparative performance analysis', 7th Int Min Proc Cong - New York, part 2, p 63-74.

95. NAGUIB, A.G. (1971) 'New considerations in design and application of sluice separators', Min Cong J, Vol 57, No. 8, p 123-128.

96. NEMETH, N. (1967) 'Filtration fundamentals', Canadian Mining and Metallurgical Bulletin, August, p 933-935.

97. OLSEN, T. & KROGH, S.R. (1975) 'A low order model of continuous ball mill grinding', 11th Int Min Proc Cong - Cagliari, paper 5.

98. PEARSE, M.J. (1977) 'Gravity thickening: a review', Report ISBN 0 85624 110 5, Warren Spring Laboratory.

98. PETHO, S. & TOMPOS, E. (1974) 'About the new index numbers of seperation', Acta Technica Academiae Scientiarum Hungaricae, Tomus, Vol 78, No. 1-2, p 237-256.

100. PLITT, L.R. (1971) 'The analysis of solid-solid separation in classifiers', CIM Bulletin, April, p 42-47.

101. PLITT, L.R. (1976) 'A mathematical model of the hydrocyclone classifier', CIM Bulletin, December, p 114-123.

102. POGORLY, A.D. (1962) 'Flotation properties of industrial pulp', Invest. Usshikh Ucheb. Zavadenii, Tsvetn Metall, Vol 5, p 33-40, quoted from Woodburn (1970).

103. POVAROV, A.I. (1981) '*Gidrotsikloni*' Gosgortekhizdat Moscow 253 pg. quoted from Schubert and Neesse (1973).

104. PONNALL, J.H. (1960) 'Cyclones in mineral processing: a review of current information', Information Note Number 2, Warren Spring Laboratory.

105. RAO, T.C.; NAGESWARARAO, K. & LYNCH, A.J. (1976) 'I[illegible] of feed inlet diameter on the hydrocyclone behaviour', Int J Min [illegible], Vol 3, p 357-383.

106. REID, K.J. (1965) 'A solution to the batch grinding equation' Chem Eng Sci, Vol 20, No. 11, p 953-963, quoted from Herbst and Mika (1970).

107. REID, K.J. (1971) 'Derivation of an equation for classifier - reduced performance curves', Can Metall Q, Vol 10, p 253-254, quoted from Harris (1972).

108. ROSE, H.E. (1977) 'Mechanisms of sieving and screening', Trans Inst Min & Metall, Vol 86, p C101-C114.

109. ROWLAND, C.A. (1979) 'Comparison of work indices calculated from operating data with those from laboratory test data', 10th Int Min Proc Cong - London, p 47-61.

110. SCHAPPER, M.A. (1976) 'Beneficiation at large particle size using photometric sorting techniques', 2nd IFAC symposium on automization in mining mineral and metal processing, Johannesburg 13-17 Sept, paper T3 B3.

111. SCHLITTER, W.E. & MARKL, W.(1975) 'Cross flow lamella thickeners', Mining Magazine, Vol 134, No. 4, p 291-297.

112. SCHUBERT, H. & NEESSE, T. (1979) 'The role of turbulence in wet classification', 10th Int Min Proc Cong - London, p 213-254.

113. SCOTT, K.J. (1968) 'Theory of thickening: factors effecting settling rate of solids in flocculated pulps', IMM Trans, Vol 77, p C85-C97.

114. SCRIMGEOUR, J.M.C., HAMILTON, R.E. & TOONG, T. (1970) 'The use of mathematical modelling in developing advanced control systems for mining industry processes', CIM Bulletin, October, p 1181-1190.

115. SOMASUNDARAN P., LIN, I.J. 'Effect of the nature of environment on comminution processes', Ind Eng Chem Proc Des Dev, Vol 11, No. 3, p 321-331.

116. STANLEY, G.G. (1974) 'Mechanisms in the autogenous mill and their mathematical representation', J SAIMM, November, p 77-98.

117. STEWART, P.S.B. & RESTARICK, C.J. (1967) 'Dynamic flow characteristics of a small spiral classifier', IMM Trans, Vol 76, p C227-C230.

118. SUTHERLAND, D.N. (1977) 'An appreciation of galena concentration using a steady state flotation model', Int J Min Proc, Vol 4, p 149-162.

119. TALMAGE, W.P. & FITCH, E.B. (1955) 'Determining thickener unit areas', Ind Engng Chem, Vol 47, No. 1, p 38-41, quoted from Paerse (1977).

120. TANAKA, T. & WARD-SELBY, D. (1976) 'A kinetic approach to interference effects in the grinding of binary mixtures', Proceedings Australian Inst Min Metall, No. 258, June, p 41-46.

121. TARRER, A.R.; LIM, H.C.; KOPPEL, L.B. & GRADY, C.P.L. (1974) 'A model for continuous thickening', Ind Eng Chem PDD, Vol 13, No. 4, p 341-346.

122. TARJAN, G. (1974) 'Application of distribution functions to partition curves', Int J Min Proc, Vol 1, p 281-286.

123. TERRILL, I.J. & VILLAR, J.B. (1975) 'Elements of high capacity gravity separation', CIM Bullatin, May, p 94-101.

124. TILLER, F.M. (1971) 'Rotary drum filtration I, in compressible cakes with variable hydrostatic head', 13th AIChE filtration symposium - Cincinati Ohio, May.

125. TOMLINSON, H.S. & FLEMING, M.G. (1963) 'Flotation rate studies', 6th Int Min Proc Cong - Cannes, p 563-573.

126. TRAHER, W.J. & WARREN, L.J. (1976) 'The flotability of very fine particles, a review', Int J Min Proc, Vol 3, p 103-131.

127. TRAWINSKI, H. (1976) 'Theory, applications and practical operation of hydrocyclones', E/MJ, September, p 115-127.

128. VALENTIK, L. & WHITMORE, R.L. (1964) 'Controlling the performance of dense medium baths', 7th Int Min Proc Cong - New York, part 2, p 87-94.

129. VINOGRADOV, N.N. et al (1968) 'New trends in theory and technology of jigging minerals', 8th Int Min Proc Cong - Leningrad, paper C2.

130. VINOGRADOV, N.N. et al (1975) 'Research on the separation kinetics of gravity processing in mineral suspensions', 11th Int Min Proc Cong - Cagliari, paper 12.

131. WAKEMAN, R.J. (1976) 'Vacuum dewatering and residual saturation of incompressible filter cakes', Int J Min Proc, Vol 3, p 193-208.

132. WHITEN, W.J. (1972) 'The simulation of crushing plants with models developed using multiple spline regression', Application of Computer Methods in the Minerals Industry - Proc 10th Int Symp (1972) publ. SAIMM, Johannesburg, 1973, p 317-323.

133. WOODBURN, E.T. (1970) 'Mathematical modelling of flotation processes', Min Sci Engng, Vol 2, No. 2, p 3-17.

134. WOODBURN, E.T.; KING, R.P. & COLBORN, R.P. (1971) 'The effect of particle size distribution on the performance of a phosphate flotation process', Metall Trans, Vol 2, p 3163-3174.

135. WOODBURN, E.T. & LOVEDAY, B.K. (1966) 'Effect of variable residence time data on the performance of a flotation system', J SAIMM, p 612-628, quoted from Woodburn (1970).

136. WOUDA, T.W.M.; RIETMA, K. & OTTENGRAF, S.P.P. (1977) 'Continuous sedimentation theory, effects of density gradient and velocity profiles on sedimentation efficiency', Chem Eng Sci, Vol 32, p 351-358.

137. YARROL, W.H. (1967) 'The use of curvelinear multiple correlation analysis in computer simulation of complex models', Transactions Society of Mining Engineers, September, p 293-297.

138. YOSHIOKA, N. & HOTTA, Y. (1955) 'Liquid cyclone as a hydraulic classifier', Chem Eng Japan, Vol 19, No. 12, p 632, quoted from Plitt (1976).

139. YOSHIOKA, N. et al (1957) 'Continuous thickening of homogenous flocculated slurries', Soc Chem Engng Japan, Vol 2, No. 2, p 47-54, quoted from Pearse (1977).

140. ZIMMERMAN, R.E. (1974) 'Batac Jig - a new improved Baum type jig for cleaning coarse and fine sizes of coal', Min Cong J, Vol 60, No. 5, p 43-49.

141. ZIMMERMAN, R.E. (1975) 'Performance of the Batac jig for cleaning fine and coarse coal sizes', Trans AIME, Vol 258, September, p 199-203.

APPENDICES

APPENDIX A CONVERGENCE OF REDUCED NEWTON METHOD

Some of the facts which are used are summerized below.

The statement $B \geq 0$ implies that each element of B is greater than or equal to zero. The statement $|B|$ is the matrix with each element the absolute value of the corresponding element in B.

(a) Neumann Lemma (Ortega and Rheinboldt (1970) p45)
Let $B \in L(R^n)$ and assume $\rho(B)<1$. Then $(I-B)^{-1}$ exists and

$$(I-B)^{-1} = \lim_{k\to\infty} \sum_{i=0}^{k} (B)^i \qquad ((B)^i \text{ is } B \text{ to the power } i)$$

(b) Let $B \in L(R^n)$ and assume $B \geq 0$. Then $(I-B)^{-1}$ exists and is non-negative if and only if $\rho(B)<1$. (Ortega and Rheinboldt (1970) p53).

(c) Let $A,B \in L(R^n)$. Then $A=B-C$ is a 'regular splitting' of A if B is invertible, $B^{-1} \geq 0$, and $C \geq 0$; it is a 'weak regular splitting' if the condition $C \geq 0$ is replaced by $B^{-1}.C \geq 0$ and $C.B^{-1} \geq 0$
(Ortega and Rheinboldt (1970) p56).

(d) Let $A \in L(R^n)$ and suppose that $A=B-C$ is a weak regular splitting. Then $\rho(B^{-1}.C)<1$ if and only if A^{-1} exists and is non-negative.
(Ortega and Rheinboldt (1970) p56).

(e) Let $A,B \in L(R^n)$ and $|a_{ij}| \leq |b_{ij}|$ for all $i,j \leq n$ then $\rho(A) \leq \rho(B)$.
(Varga (1962) p 48).

(f) Let $A,B \in L(R^n)$ then $\rho(AB) \leq \rho(|AB|)$. (Ta... (1964) p127).

(g) As $|AB| \leq |A|.|B|$, combining FACT e and FACT f implies that $\rho(|AB|) < \rho(|A|.|B|)$.

(h) $\left| \sum_{i=1}^{m} a_i \right| \leq \sum_{i=1}^{m} |a_i|$ (Wylie (1966) p642).

(i) $|x-y| \geq ||x|-|y|| \geq |x|-|y|$ (Wylie (1966) p642).

(j) $|x|.|y| = |xy|$ (Wylie (1966) p642).

(k) $\sum_{j=1}^{n} \sum_{i=1}^{m} x_i y_j = \sum_{i=1}^{m} x_i \sum_{j=1}^{n} y_j = \sum_{j=1}^{n} y_j \sum_{i=1}^{m} x_i = \sum_{i=1}^{m} \sum_{j=1}^{n} x_i y_j$

(l) Let $L \in L(R^n)$. Then $\rho(B) \leq ||B||$ for any arbitrary norm.
(Varga (1962) p9).

FACTS g and k are not referenced as they are self evident.

Note $\Phi' = \Phi'(X^*)$ and $Q = Q(X^*)$

A.1 Convergence when $\Phi' \geq 0$ and $\rho(\Phi')<1$

As $\Phi' \geq 0$ and Q is extracted from Φ'

$\therefore \quad Q \geq 0$ ---------- A.1

and $\quad (\Phi'-Q) \geq 0$ ---------- A.2

and $\quad |q_{ij}| \leq |\phi_{ij}|$ ---------- A.3

$\therefore \quad \rho(Q) \leq \rho(\Phi')<1$ by A.3, FACT e ---------- A.4

$\therefore \quad (I-Q)^{-1} \geq 0$ by A.1, A.4 and FACT b ---------- A.5

$\therefore \quad (\Phi'-Q).(I-Q)^{-1} \geq 0$ by A.2 and A.5 ---------- A.6a

and $\quad (I-Q)^{-1}.(\Phi'-Q) \geq 0$ by A.2 and A.5 ---------- A.6b

If $A = (I-Q)-(\Phi'-Q)$ then it is a weak splitting (A.5, A.6 and FACT c).

But $\quad (I-Q)-(\Phi'-Q) = I-\Phi'$

$\therefore \quad A^{-1} = (I-\Phi')^{-1}$

≥ 0 by FACT b and original conditions

$\therefore \quad \rho((I-Q)^{-1}.(\Phi'-Q))<1$ by FACT d

A.2 Convergence when $Q \geq 0$ and $\rho(|\Phi'|)<1$

In this case choose:-

$$A = (I-Q)-|\Phi'-Q|$$

But $|\Phi'-Q| \geq 0$ by definition

and $(I-Q)^{-1} \geq 0$ by initial condition and FACTS b, e and f

$\therefore \quad |\Phi'-Q|.(I-Q)^{-1} \geq 0$

and $(I-Q)^{-1}.|\Phi'-Q| \geq 0$

$\therefore$ A is a weak regular splitting by FACT C

Also

$$|\Phi'-Q| = |\Phi'|-Q \quad \text{as } Q \geq 0 \text{ and is extracted from } \Phi'$$

$$\therefore \quad (I-Q)-|\Phi'-Q| = I-|\Phi'|$$

$$\therefore \quad A^{-1} = (I-|\Phi'|)^{-1}$$

$$\geq 0 \quad \text{by initial condition and FACT b}$$

$\therefore \rho((I-Q)^{-1}.|\Phi'-Q|)<1$ by FACT d

But $\rho((I-Q)^{-1}.|\Phi'-Q|) = \rho(|(I-Q)^{-1}|.|\Phi'-Q|)$ as $(I-Q)^{-1} \geq 0$

$$\geq \rho((I-Q)^{-1}.(\Phi'-Q)) \quad \text{by FACTS f and g}$$

$\therefore \rho((I-Q)^{-1}.(\Phi'-Q))<1$

A.3 Convergence when the diagonal elements of Q are the same as those of Φ' and the remainder zero and $||\Phi'||_\infty<1$

Here

$$G'(X^*)=(I-Q)^{-1}.(\Phi'-Q) = \begin{bmatrix} \frac{1}{1-\phi_{11}} & 0 & \cdots & 0 \\ 0 & \frac{?}{1-\phi_{22}} & & 0 \\ \vdots & & \ddots & \vdots \\ 0 & \cdots & & \frac{1}{1-\phi_{nn}} \end{bmatrix} \begin{bmatrix} 0 & \phi_{12} & \cdots & \phi_{1n} \\ \phi_{21} & 0 & & \phi_{2n} \\ \vdots & & \ddots & \vdots \\ \phi_{n1} & \cdots & & 0 \end{bmatrix}$$

$$= \begin{bmatrix} 0 & \frac{\phi_{12}}{1-\phi_{11}} & \cdots & \frac{\phi_{1n}}{1-\phi_{11}} \\ \frac{\phi_{21}}{1-\phi_{22}} & & \ddots & \frac{\phi_{2n}}{1-\phi_{22}} \\ \vdots & & \ddots & \vdots \\ \frac{\phi_{n1}}{1-\phi_{nn}} & \cdots & & 0 \end{bmatrix}$$

$$\therefore \quad ||G'(X^*)||_\infty = \max_{1\le i\le n} \sum_{\substack{j=1 \\ j\neq i}}^{n} \left|\frac{\phi_{ij}}{1-\phi_{ii}}\right|$$

But when $||\Phi'||_\infty<1$

then $\sum_{j=1}^{n} |\phi_{ij}|<1$ for all i

So $\sum_{\substack{j=1 \\ j\neq i}}^{n} |\phi_{ij}|<1-|\phi_{ii}|\le|1-\phi_{ii}|$ for all i by FACT i

$\therefore$ $\sum_{\substack{j=1 \\ j\neq i}}^{n} |\phi_{ij}|/|1-\phi_{ii}|<1$ for all i

$\therefore$ $||G'(X^*)||_\infty<1$

$\therefore$ $\rho((I-Q)^{-1}.(\Phi'-Q))<1$ by FACT 1

A.4. Convergence in general when $||\phi'||_\infty<1$

$\Phi' \epsilon R^n$ and if Q, which is block diagonal, has blocks of size MxM ($0<M\leq n$), then $(I-Q)^{-1}$ is also block diagonal with blocks of size MxM. Further if Q_i is the ith block counting from the top left corner so that when Q is partitioned:-

$$Q = \begin{bmatrix} Q_1 & 0 & \cdots & 0 \\ 0 & Q_2 & \ddots & \vdots \\ \vdots & \ddots & \ddots & \vdots \\ 0 & \cdots & \cdots & Q_L \end{bmatrix} \quad \text{for } L = n/M$$

then

$$(I-Q)^{-1} = \begin{bmatrix} (I-Q_1)^{-1} & 0 & \cdots & 0 \\ 0 & (I-Q_2)^{-1} & & \vdots \\ \vdots & & \ddots & \vdots \\ 0 & \cdots & \cdots & (I-Q_L)^{-1} \end{bmatrix}$$

This is readily seen from Lepidus (1962) p251-2, when the off-diagonal blocks of the matrix to be inverted are zero. When $(\Phi'-Q)$ is partitioned into MxM blocks:-

$$(I-Q)^{-1}.(\Phi'-Q) = \begin{bmatrix} (I-Q_1)^{-1} & 0 & \cdots & 0 & P_{12} & \cdots & P_{1L} \\ 0 & (I-Q_2)^{-1} & & P_{21} & 0 & & \vdots \\ \vdots & & \ddots & \vdots & & \ddots & \vdots \\ 0 & \cdots & \cdots & (I-Q_L)^{-1} & P_{L1} & \cdots & 0 \end{bmatrix}$$

where P_{ij} is the matrix with elements corresponding to those in rows $(i-1)M+1$ to $M.i$ and columns $(j-1)M+1$ to $M.j$ of Φ'.

therefore

$$(I-Q)^{-1}.(\Phi'-Q)=\begin{bmatrix} 0 & (I-Q_1)^{-1}.P_{12} & \cdots & (I-Q_1)^{-1}.P_{1L} \\ (I-Q_2)^{-1}.P_{21} & 0 & & \\ \vdots & & \ddots & \\ (I-Q_L)^{-1}.P_{L1} & \cdots & & 0 \end{bmatrix} \qquad \text{A.7}$$

Simdlarly if rows M+1 to 2M and columns M+1 to 2M of Φ' are interchanged with rows 1 to M and columns 1 to M then:-

$$(I-Q)^{-1}.(\Phi'-Q)=\begin{bmatrix} 0 & (I-Q_2)^{-1}.P_{21} & \cdots & (I-Q_2)^{-1}.P_{2L} \\ (I-Q_1)^{-1}.P_{12} & 0 & \cdots & (I-Q_1)^{-1}.P_{1L} \\ \vdots & & \ddots & \\ (I-Q_L)^{-1}.P_{L2} & \cdots & & 0 \end{bmatrix} \qquad \text{A.8}$$

Comparing equations A.7 and A.8 it can be seen that the elements in each row are unchanged although the row position has changed. This is clearly true for any interchange of rows and columns corresponding to the MxM partitions of Φ'. Consequently in finding the l_∞ norm of $(I-Q)^{-1}.(\Phi'-Q)$ it is only necessary to consider the first M rows, and if the row sums of the absolute values of elements in the rows are less than one then it can be concluded that the l_∞ norm of $(I-Q)^{-1}.(\Phi'-Q)$ is less than one as any set of M rows can be moved to the first M rows without changing the elements in the rows.

Set ϕ_{ij} = the element in the ith row and j^{th} column of Φ'

a^m_{ij} = the element in the ith row and j^{th} column of $(I-Q)^{-1}$ when the diagonal blocks of Q are mxm

γ^m_{ij} = the element in the ith row and j^{th} column of $(I-Q)^{-1}.(\Phi'-Q)$ when the diagonal blocks of Q are mxm

Then considering only the first m rows of $(I-Q)^{-1}.(\phi'-Q)$

$$Y_{il}^{m} = \sum_{k=1}^{m} \alpha_{ik}^{m}\phi_{kl} \qquad i\leq m \quad l>m$$

$$= 0 \qquad i\leq m \quad l\leq m$$

$$\text{Set } G_i^m = \sum_{l=1}^{n} |Y_{il}^{m}| \qquad i\leq m$$

$$= \sum_{l=m+1}^{n} |Y_{il}^{m}| \qquad i\leq m$$

$$\therefore \quad G_i^m = \sum_{l=m+1}^{n} \left| \sum_{k=1}^{m} \alpha_{ik}^{m}\phi_{kl} \right| \qquad i\leq m$$

$$\text{and } G_i^{m-1} = \sum_{l=m}^{n} \left| \sum_{k=1}^{m-1} \alpha_{ik}^{m-1}\phi_{kl} \right| \qquad i\leq m-1$$

Using the 'Bordering' method of matrix inversion it is possible to obtain α_{ik}^{m} in terms of α_{ik}^{m-1} (Fadeeva (1963) p163-8) from:-

$$\alpha_{ik}^{m} = \alpha_{ik}^{m-1} + \beta_{im}\cdot\delta_{mk}/\Delta_m \qquad i,k\leq m-1$$

$$\alpha_{im}^{m} = -\beta_{im}/\Delta_m \qquad i\leq m-1$$

$$\alpha_{mi}^{m} = -\delta_{mi}/\Delta_m \qquad i\leq m-1$$

$$\alpha_{mm}^{m} = 1/\Delta_m$$

where

$$\beta_{im} = -\sum_{k=1}^{m-1} \alpha_{ik}^{m-1}\phi_{km} \qquad \delta_{mi} = -\sum_{j=1}^{m-1} \phi_{mj}\alpha_{ji}^{m-1} \qquad i\leq m-1$$

$$\Delta_m = 1-\phi_{mm} + \sum_{i=1}^{m-1} \phi_{mi}\beta_{im} = 1-\phi_{mm} + \sum_{i=1}^{m-1} \phi_{im}\delta_{mi}$$

Then

$$G_i^m = \sum_{l=m+1}^{n} \left| \sum_{k=1}^{m-1} \alpha_{ik}^{m-1}\phi_{kl} + \sum_{k=1}^{m-1} \beta_{im}\delta_{mk}\phi_{kl}/\Delta_m - \beta_{im}\phi_{ml}/\Delta_m \right| \qquad i\leq m-1$$

---------- A.9

$$\text{and } G_m^m = \sum_{l=m+1}^{n} \left| -\sum_{k=1}^{m-1} \delta_{mk}\phi_{kl}/\Delta_m + \phi_{ml}/\Delta_m \right|$$

---------- A.10

Consider equation A.8 first

$$G_i^m = \sum_{l=m}^{n} \left| \gamma_{il}^{m-1} + \beta_{im}/\Delta_m \left(\sum_{k=1}^{m-1} \delta_{mk}\phi_{kl} - \phi_{ml} \right) \right| \cdot \left| -\beta_{im} + \beta_{im}/\Delta_m \left(\sum_{k=1}^{m-1} \delta_{mk}\phi_{km} - \phi_{mm} \right) \right|$$

But $\sum_{k=1}^{m-1} \delta_{mk}\phi_{kl} - \sum_{k=1}^{m-1} \phi_{kl} \sum_{j=1}^{m-1} \phi_{mj}\alpha_{jk}^{m-1} = -\sum_{j=1}^{m-1} \phi_{mj} \sum_{k=1}^{m-1} \alpha_{jk}^{m-1}\phi_{kl} = -\sum_{j=1}^{m-1} \phi_{mj}\gamma_{jl}^{m-1}$

and $\sum_{k=1}^{m-1} \delta_{mk}\phi_{km} - \phi_{mm} = \Delta_m - 1$

$$\therefore \quad G_i^m = \sum_{l=m}^{n} \left| \gamma_{il}^{m-1} + \beta_{im}/\Delta_m \left(-\sum_{j=1}^{m-1} \phi_{mj}\gamma_{jl}^{m-1} - \phi_{ml} \right) \right| \cdot \left| -\beta_{im}/\Delta_m \right|$$

$$\leq \sum_{l=m}^{n} \left| \gamma_{il}^{m-1} \right| + \left| -\beta_{im}/\Delta_m \right| \cdot \left(\sum_{j=1}^{m-1} \left| \phi_{mj} \right| \cdot G_j^{m-1} + \sum_{l=m}^{n} \left| \phi_{ml} \right| - 1 \right)$$

If $G_j^{m-1} \leq 1$ for all $j \leq m-1$

then

$$G_i^m \leq G_i^{m-1} + \left| -\beta_{im}/\Delta_m \right| \cdot \left(\sum_{l=1}^{n} \left| \phi_{ml} \right| - 1 \right) \qquad i \leq m-1$$

As $||\phi'||_\infty < 1$ then $\sum_{l=1}^{n} |\phi_{jl}| < 1$ for all j including $j = m$

$$\therefore \quad G_i^m \leq G_i^{m-1} \qquad \text{if } G_j^{m-1} \leq 1 \quad \text{for all } 0 < i, j \leq m-1 \qquad \text{---------- A.11}$$

Similarly for equation A.10

$$G_m^m = \sum_{l=m}^{n} \left| \frac{1}{\Delta_m} \right| \cdot \left| \sum_{j=1}^{m-1} \phi_{mj}\gamma_{jl}^{m-1} + \phi_{ml} \right| - \left| \frac{1}{\Delta_m} \right| \cdot \left| \sum_{k=1}^{m-1} \delta_{mk}\phi_{km} + \phi_{mm} \right|$$

$$= \left| \frac{1}{\Delta_m} \right| \cdot \left(\sum_{l=m}^{n} \left| \sum_{j=1}^{m-1} \phi_{mj}\gamma_{jl}^{m-1} + \phi_{ml} \right| - \left| 1 - \Delta_m \right| \right)$$

$$\leq \left| \frac{1}{\Delta_m} \right| \cdot \left(\sum_{j=1}^{m-1} \left| \phi_{mj} \right| \cdot G_j^{m-1} + \sum_{l=m}^{n} \left| \phi_{ml} \right| - 1 + \left| \Delta_m \right| \right)$$

If $G_j^{m-1} \leq 1$ for all $j \leq m-1$

then

$$G_m^m \leq \left|\frac{1}{\Delta_m}\right| . \left(\sum_{l=1}^{n} |\phi_{ml}| - 1 + |\Delta_m| \right)$$

and hence

$$\boxed{G_m^m < 1 \text{ if } G_j^{m-1} \leq 1 \quad \text{for all } j \leq m-1} \qquad \text{---------- A.12}$$

By definition

$$G_1^1 = \sum_{l=2}^{n} |Y_{11}^1| = \sum_{l=2}^{n} |\alpha_{11}^1 \phi_{11}|$$

$$= \sum_{l=2}^{n} \left|\frac{\phi_{11}}{1-\phi_{11}}\right|$$

$$< 1 \qquad \text{(shown in part A.3 of this appendix)}$$

Therefore by induction and equations A.11 and A.12 it can be concluded that:-

$$G_i^m < 1 \quad \text{for all } i \leq m$$

If $m=M$ then:-

$$G_i^M < 1 \quad \text{for all } i \leq M$$

and as before the sets of M rows and columns are interchangable so that:-

$$G_i^M < 1 \quad \text{for all } i \leq n \qquad \text{---------- A.13}$$

Using the l_∞ norm:-

$$\left|\left|(I-Q)^{-1}.(\phi'-Q)\right|\right|_\infty = \max_{1 \leq i \leq n} G_i^M$$

$$< 1 \qquad \text{by equation A.13}$$

therefore

$$\rho((I-Q)^{-1}.(\phi'-Q)) \leq 1 \qquad \text{by FACT 8}$$

Corrolary:-

$$|\phi_{ii}| = |1-1+|\phi_{ii}| \qquad \text{for all } i \leq n$$

$$\geq |1-|1-\phi_{ii}|$$

$$> ||\phi'||_\infty - ||\phi'||_\infty |1-\phi_{ii}| \qquad \text{as } ||\phi'||_\infty < 1$$

$$\geq \sum_{l=1}^{n} |\phi_{il}| - ||\phi'||_\infty |1-\phi_{ii}|$$

$$\therefore ||\phi'||_\infty > \sum_{\substack{l=1 \\ l \neq i}}^{n} |\phi_{il}| / |1-\phi_{ii}|$$

$$= G_i^1 \qquad \text{(see part A.3)}$$

But $G_i^1 \geq G_i^2 \geq \ldots \geq G_i^M$ for all $i \leq n$ by equation A.13 and A.11

$$\therefore ||\phi'||_\infty > G_i^M \qquad \text{for all } i \leq n$$

$$\therefore ||\phi'||_\infty > \max_{1 \leq i \leq n} G_i^M = ||G_{RN}||_\infty$$

where $||G_{RN}||_\infty = ||G'(X^*)||_\infty$ for the reduced Newton method

APPENDIX B THE SPECTRAL RADIUS OF A LOWER BLOCK TRIANGULAR MATRIX IS THE MAXIMUM OF THE SPECTRAL RADII OF EACH OF THE DIAGONAL BLOCKS

Define

$$A = \begin{bmatrix} A_{11} & 0 & \cdots & 0 \\ A_{21} & A_{22} & & \vdots \\ \vdots & & \ddots & \vdots \\ A_{N1} & \cdots & \cdots & A_{NN} \end{bmatrix}$$

where the A_{ii} are square (not necessarily equal sized) matrices and A_{ij} the lower triangular matrices (not necessarily square but determined by the sizes of A_{ii} and A_{jj}) of the partitioned matrix A.

If A is now expanded by 'Laplace's Expansion' (Wylie (1960) p406) to get the determinant of A (det (A)):-

$$\det(A)=\det(A_{11}).\det\begin{bmatrix} A_{22} & 0 & \cdots & 0 \\ A_{32} & A_{33} & & \vdots \\ \vdots & & \ddots & \vdots \\ A_{N2} & \cdots & \cdots & A_{NN} \end{bmatrix} + 0$$

$$=\det(A_{11}).\det(A_{22}).\begin{bmatrix} A_{33} & 0 & \cdots & 0 \\ A_{43} & A_{44} & & \vdots \\ \vdots & & \ddots & \vdots \\ A_{N3} & \cdots & \cdots & A_{NN} \end{bmatrix} + 0$$

$$=\det(A_{11}).\det(A_{22})\ldots\det(A_{NN}) \qquad \text{B.1}$$

The eigenvalues of A are found by solving

$$\det(A-\lambda I) = 0 \quad \text{for } \lambda$$

which by equation B.1 is:-

$$\det(A_{11}-\lambda I).\det(A_{22}-\lambda I)\ldots\det(A_{NN}-\lambda I) = 0$$

therefore the eigenvalues are found by solving

$$\det(A_{ii}-\lambda I) = 0 \quad \text{for } i=1,N$$

and the eigenvalues of the A_{ii} are the eigenvalues of A

$$\therefore \quad \rho(A) = \max_{1\le i\le N} \rho(A_{ii})$$

APPENDIX C WEIGHTING FACTORS

To choose the tear set with the least number of double tears, each stream is simply weighted by the number of cycles it opens (m_k). Then any tear set with no double tears will have a weighted sum equal to the number of cycles, and if any cycle is opened more than once the weighted sum will be more than the minimum.

To choose between the members of the 'no double tear' family (presuming there is more than one member in the family) on the basis of the member with the least tear streams, the streams must be weighted so that streams which open fewer cycles must be weighted slightly heavier than ones which open more cycles.

The worst case that can arise when decomposing a network of NC cycles, is when the tear set containing NC streams each open g only one cycle must be chosen in preference to the tear set which contains only two streams but causes a double tear.

Set $W_k = m_k + X$ $\quad X>0$

Suppose for the two stream case that one stream opens M cycles and the other stream (NC-M+1) cycles, so causing the double tear, then the sum of weighting factors will be;

$$C' = W_1 + W_2 = \{(M+X) + (NC-M+1)+X\}$$

$$= NC+1+2X$$

For the first situation $C = NC(1+X)$.
So to choose the 'no double tears' case, C must be less than C';

$$NC(1+X) < NC+1+2X$$

or $$X < 1/(NC-2)$$

Converting to integers $W_k = A.m_k + 1$ for $A>(NC-2)$

Similarly when the criterion is required to select the tear set with the least torn variables within the family of 'no double tears' than the tear set containing as many streams as there are cycles in the network, each having the maximum number of variables (NV_k) but causing no double tears, must have a weighted sum less than the tear set containing only two streams with one variable in each but causing a double tear.

Setting $$W_k = m_k + NV_k . X$$

then it is required that

$$NC(1+NV_{max}X) < (M+X) + ([NC-M+1)+X)$$

so that $$X < 1/(NC.NV_{max}-2)$$

Converting to integers

$$W_k = B.m_k + NV_k \qquad \text{where } B > (NC.NV_{max}-2)$$

COMPUTER DISPLAYS

FOR TEST EXAMPLE I

(i) INPUT DATA

```
L.0001 SYSTEM DATA
L.0002 NDGS    2    3    3    2
L.0003 NDGS    4    3    1    1
L.0004 NDGS    3    4    3    1
L.0005 MINS    2
L.0006 VALU
L.0007 WSTE
L.0008 CNCT    3    3    2    1
L.0009 CNCT    3    8    2    2
L.0010 CNCT    3   17    4    1
L.0011 CNCT    2   20    4    2
L.0012 SIZE
L.0013        1000.0      500.0      250.0      125.0
L.0014 SPGR
L.0015           7.5        2.8
L.0016 GROW
L.0017           1.0        0.0
L.0018           0.5        0.5
L.0019           0.0        1.0
L.0020 PHYP    3    2
L.0021           6.0       10.0
L.0022 PHYP    41004
L.0023          20.0       16.0
L.0024
L.0025 PLANT DATA
L.0026 WLNT    3
L.0027 SCMA    1    5    2
L.0028 SCMA    2    0    5
L.0029 SCMA    3    2    0
L.0030 SCMA    4    2    1
L.0031 SCMA    5    9    6
L.0032 SCMA    6    1    5
L.0033 SCMA    7   12    6
L.0034 SCMA    8    1    3
L.0035 SCMA    9   11    3
L.0036 SCMA   10    9   11
L.0037 SCMA   12   11   12
L.0038 SCMA   13   12    5
L.0039 SCMA   14    6    8
L.0040 SCMA   15    8   10
L.0041 SCMA   16   10    6
L.0042 SCMA   17   10    0
L.0043 SCMA   18    3    9
L.0044 WTRF    6
L.0045          50.0        0.0
L.0046 STRM    2    2
L.0047         100.0       15.0
L.0048          0.25       0.40       0.20       0.15
L.0049           0.0       0.95       0.05
L.0050          0.05       0.85       0.10
L.0051          0.15       0.40       0.45
L.0052          0.25       0.10       0.65
L.0053
L.0054 RUN DATA1
```

```
L.0055  TYPE     5  MIXR
L.0056  TYPE     2  TRMP     9
L.0057           0.4          12.0          0.0          0.0          0.2          0.0          0.1          400.0
L.0058        2000.0
L.0059  COPY     1  FROM     2
L.0060  TYPE     3  MIXR
L.0061  TYPE     9  TRMP     9
L.0062           0.4
L.0063           5.0           0.0          2.0          0.0          1.0          0.2          0.1          0.4
L.0064  COPY    11  FROM     9
L.0065  TYPE    12  TRMP    14
L.0066           0.0
L.0067         300.0           2.0         12.0          0.0          1.0          0.5          0.0          0.1
L.0068  TYPE     6  MIXR  2009.0           0.0          0.0          0.6          6.0
L.0069  TYPE     8  CRSH     5
L.0070           0.0
L.0071  TYPE    10  TRMP     9           3.0          0.15         0.10         0.06
L.0072           0.4
L.0073        2000.0           2.3          0.0          0.0          0.2          0.1          0.5          500.0
L.0074  OUTC
L.0075     0     0     0     2     0     0     1     6     6
L.0076
L.0077  RUN DATA2
L.0078  CUTC
L.0079     4     0     4     1     0     0     0     0     0
L.0080
L.0081  PLANT DATA
L.0082  PLNT     2
L.0083  SCMA     1     0     2
L.0084  SCMA     2     0     5
L.0085  SCMA    10     2     1
L.0086  SCMA    11     1     4
L.0087  SCMA    12     4     5
L.0088  SCMA    13     4     1
L.0089  SCMA    14     4     2
L.0090  SCMA    15     8     5
L.0091  SCMA    16     5     7
L.0092  SCMA    17     7     9
L.0093  SCMA    18     9     5
L.0094  SCMA    19     7     0
L.0095  SCMA    20     9     0
L.0096  WTCR     8
L.0097  STAT    13     0
L.0098  STAT    14     0
L.0099  STAT    15     0
L.0100  WTAP     2
L.0101           20.0          0.0
L.0102  STRM     1     2
L.0103                1.0          1.0
L.0104                1.0          1.0          1.0
L.0105                1.0          1.0          1.0
L.0106                0.9          0.1
L.0107                0.5          0.5
L.0108                0.1          0.9
L.0109                1.0          1.0
L.0110                0.99         0.05         1.0
L.0111                0.5          0.5
L.0112                0.05         0.45
L.0113                1.0          1.0          1.0
```

```
                                                
```

```
L.0173          0.4          4.0          0.0          0.0          0.2          0.0          3.8          100.0
L.0174      2000.0
L.0175 COPY    2 FROM    4
L.0176 COPY    5 FROM    3
L.0177 QUIC
L.0178    0    0    0    3    3    3    0    0    3    0
L.0179 STOP
```

(ii)OUTPUT FROM INPUT PHASE

/P PH11

INTER-PLANT CONNECTIONS
****

FROM PLANT 3 STREAM 3 TO PLANT 2 STREAM 1
FROM PLANT 3 STREAM 5 TO PLANT 2 STREAM 2
FROM PLANT 3 STREAM 17 TO PLANT 4 STREAM 1
FROM PLANT 2 STREAM 20 TO PLANT 4 STREAM 2

MINERAL NAMES
****

VALL WSTE

SIZE DISTRIBUTION
****

1000. 500.0 250.0 125.0

240.

MASS FRACTIONS IN G-CLASSES
****

G-CLASS 1 1.000 0.0
G-CLASS 2 0.500 0.500
G-CLASS 3 0.0 1.000

VOLUME FRACTIONS IN G-CLASSES
****

G-CLASS 1 1.000 0.0
G-CLASS 2 0.272 0.728
G-CLASS 3 0.0 1.000

PHYSICAL PROPERTIES
****

PHYS PROP 1

7.500 4.078 2.800

PHYS PROP 3

6.000 10.00

PHYS PROP 4

20.00 16.92 16.00

****

PLANT NUMBER 3

****

NUMBER OF D-CLASSES= 4
NUMBER OF G-CLASSES= 3
NUMBER OF S-CLASSES= 1

STREAM CONNECTION MATRIX
****

STREAM 1 CONNECTS UNIT 5 TO UNIT 2
STREAM 2 CONNECTS UNIT 0 TO UNIT 5
STREAM 3 CONNECTS UNIT 2 TO UNIT 0
STREAM 4 CONNECTS UNIT 2 TO UNIT 1
STREAM 5 CONNECTS UNIT 9 TO UNIT 0
STREAM 6 CONNECTS UNI TO UNIT 5
STREAM 7 CONNECTS U TO UNIT 6
STREAM 8 CONNECTS U C UNIT 3
STREAM 9 CONNECTS U 1 0 UNIT 3
STREAM 10 CONNECTS U TO UNIT 11
STREAM 12 CONNECTS UN, 1 TO UNIT 12
STREAM 13 CONNECTS UNIT 12 TO UNIT 5
STREAM 14 CONNECTS UNIT 6 TO UNIT 8
STREAM 15 CONNECTS UNIT 8 TO UNIT 10
STREAM 16 CONNECTS UNIT 10 TO UNIT 6
STREAM 17 CONNECTS UNIT 10 TO UNIT 0
STREAM 18 CONNECTS UNIT 3 TO UNIT 9

STREAM WEIGHTINGS
****

USING CRITERION 2 THE FOLLOWING VALUES WERE OBTAINED:

1 1 1 1 1 1 1 1 1 1 1 1 1 1 1 1
1 1 1

WATER FEEDS
****

UNIT 6 IS FED BY 50.00 WATER AT0.0 %SOLIDS

STREAM NUMBER 2
****

TOTAL MASS SOLIDS= 100.0
PERCENTAGE SOLIDS= 15.00

MASS IN EACH CATEGORY:

		D-CLASSES			
		1	2	3	4
SCL 1 GCL 1		0.0	2.00	3.00	3.75
SCL 1 GCL 2		23.75	34.00	8.00	1.50
SCL 1 GCL 3		1.25	4.00	9.00	9.75

RUN DATA
****
****

CONVERGENCE METHOD= 3
MAX NUMBER ITERATIONS= 8
TOLERANCE LIMIT=10**-4

242

UNIT NUMBER 1
==========

IS A TRMP UNIT AND NEEDS 9 PARAMETERS

C.4000 2000.	12.00	0.0	0.0	0.2000	0.0	C.1000E 00	400.0

UNIT NUMBER 2
==========

IS A TRMP UNIT AND NEEDS 9 PARAMETERS

C.4000 2000.	12.00	0.0	0.0	0.2000	C.0	C.1000E 00	400.0

UNIT NUMBER 3
==========

IS A MIXR UNIT AND NEEDS 0 PARAMETERS

UNIT NUMBER 5
==========

IS A MIXR UNIT AND NEEDS 0 PARAMETERS

UNIT NUMBER 6

IS A MIXR UNIT AND NEEDS 0 PARAMETERS

UNIT NUMBER 8

IS A CRSH UNIT AND NEEDS 5 PARAMETERS

0.0	3.000	0.1500	0.1000E 00	0.8000E-01

UNIT NUMBER 9

IS A TRMP UNIT AND NEEDS 9 PARAMETERS

0.4000	0.0	2.000	0.0	1.000	0.2000	0.1000E 00	0.4000
5.000							

UNIT NUMBER 10

IS A TRMP UNIT AND NEEDS 9 PARAMETERS

0.4000	2.000	0.0	0.0	0.2000	0.1000E 00	0.5000	500.0
2000.							

UNIT NUMBER 11

IS A TRMP UNIT AND NEEDS 9 PARAMETERS

0.4000	0.0	2.000	0.0	1.000	0.2000	0.1000E 00	0.4000
5.000							

UNIT NUMBER 12

IS A TRMP UNIT AND NEEDS 14 PARAMETERS

0.6000	2.000	12.00	0.0	1.000	0.8000	0.0	0.1000E 00
300.0	2000.	0.0	0.0	0.6000	6.000		

THE SELECTED OUTPUT CODES ARE:

0 0 0 2 0 0 1 6 6 6

RUN DATA
****
****

CONVERGENCE METHOD= 3
MAX NUMBER ITERATIONS= 8
TOLERANCE LIMIT=10**-4

UNIT NUMBER 1
==========

IS A TRMP UNIT AND NEEDS 9 PARAMETERS

0.4000 2000.	12.00	0.0	0.0	0.2000	0.0	0.1000E 00	400.0

UNIT NUMBER 2
==========

IS A TRMP UNIT AND NEEDS 9 PARAMETERS

0.4000 2000.	12.00	0.0	0.0	0.2000	0.0	0.1000E 00	400.0

UNIT NUMBER 3
==========

IS A MIXR UNIT AND NEEDS 0 PARAMETERS

UNIT NUMBER 5
==========

IS A MIXR UNIT AND NEEDS 0 PARAMETERS

UNIT NUMBER 6
==========

IS A MIXR UNIT AND NEEDS 0 PARAMETERS

UNIT NUMBER 8
==========

IS A CRSH UNIT AND NEEDS 5 PARAMETERS

0.0	3.000	0.1500	0.1000E 00	0.8000E-01

UNIT NUMBER 9

IS A TRMP UNIT AND NEEDS 9 PARAMETERS

C.4000								
5.000	0.0	2.000	0.0	1.000	C.2000	0.1000E 00	0.4000	

UNIT NUMBER 10

IS A TRMP UNIT AND NEEDS 9 PARAMETERS

C.4000							
2000.	2.000	0.0	0.0	0.2000	C.1000E 00	0.5000	500.0

UNIT NUMBER 11

IS A TRMP UNIT AND NEEDS 9 PARAMETERS

C.4000							
5.000	0.0	2.000	0.0	1.000	0.2000	C.1000E 00	0.4000

UNIT NUMBER 12

IS A TRMP UNIT AND NEEDS 14 PARAMETERS

0.6000								
300.0	2.000	12.00	0.0	1.000	0.8000	0.0	0.1000E 00	
	2000.	0.0	0.0	0.0000	6.000			

THE SELECTED OUTPUT CODES ARE:

4 0 4 1 C C 0 0 0 0

****

PLANT NUMBER 2

****

NUMBER OF D-CLASSES= 3
NUMBER OF G-CLASSES= 3
NUMBER OF S-CLASSES= 2

STREAM CONNECTION MATRIX
****

STREAM 1 CONNECTS UNIT 0 TO UNIT 2
STREAM 2 CONNECTS UNIT 0 TO UNIT 5
STREAM 10 CONNECTS UNIT 2 TO UNIT 1
STREAM 11 CONNECTS UNIT 1 TO UNIT 4
STREAM 12 CONNECTS UNIT 4 TO UNIT 8
STREAM 13 CONNECTS UNIT 8 TO UNIT 1
STREAM 14 CONNECTS UNIT 4 TO UNIT 2
STREAM 15 CONNECTS UNIT 8 TO UNIT 5
STREAM 16 CONNECTS UNIT 5 TO UNIT 7
STREAM 17 CONNECTS UNIT 7 TO UNIT 9
STREAM 18 CONNECTS UNIT 6 TO UNIT 5
STREAM 19 CONNECTS UNIT 7 TO UNIT 0
STREAM 20 CONNECTS UNIT 9 TO UNIT 0

STREAM WEIGHTINGS
****

USING CRITERION 0 THE FOLLOWING VALUES WERE OBTAINED:

1 1 1 1 1 1 1 1 1 1 1 1 0 0 1
1 1 0 1 1

WATER FEEDS
****

UNIT 2 IS FED BY 20.00 WATER AT0.0 %SOLIDS

STREAM NUMBER 1
****

TOTAL MASS SOLIDS= 1.000
PERCENTAGE SOLIDS= 1.000

MASS IN EACH CATEGORY:

		D-CLASSES		
		1	2	3
SCL 1	GCL 1	0.90	0.95	1.00
SCL 1	GCL 2	0.50	0.50	0.50
SCL 1	GCL 3	0.10	0.05	0.0
SCL 2	GCL 1	0.10	0.05	0.0
SCL 2	GCL 2	0.50	0.50	0.50
SCL 2	GCL 3	0.90	0.95	1.00

STREAM NUMBER 2
****

TOTAL MASS SOLIDS= 9.000
PERCENTAGE SOLIDS= 20.00

MASS IN EACH CATEGORY:

		D-CLASSES 1	2	3
SCL 1	CCL 1	0.90	0.95	1.00
SCL 1	CCL 2	0.50	0.50	0.50
SCL 1	CCL 3	0.10	0.05	0.0
SCL 2	CCL 1	0.10	0.05	0.0
SCL 2	CCL 2	0.50	0.50	0.50
SCL 2	CCL 3	0.90	0.95	1.00

RUN DATA
****
****

CONVERGENCE METHOD= 3
MAX NUMBER ITERATIONS= 8
TOLERANCE LIMIT=10**-4

UNIT NUMBER 1
==========

IS A MIXR UNIT AND NEEDS 0 PARAMETERS

UNIT NUMBER 2
==========

IS A MIXR UNIT AND NEEDS 0 PARAMETERS

UNIT NUMBER 4
==========

IS A TRMP UNIT AND NEEDS 9 PARAMETERS

C.4000 0.0 0.0 4.000 3.000 C.3CC0 C.2000 4.000
8.CCC

UNIT NUMBER 5
==========

IS A MIXR UNIT AND NEEDS 0 PARAMETERS

UNIT NUMBER 7

IS A TRMP UNIT AND NEEDS 9 PARAMETERS

0.4000	0.0	13.00	0.0	4.000	0.2000	0.1000E 00	5.000
17.50							

UNIT NUMBER 8

IS A TRMP UNIT AND NEEDS 9 PARAMETERS

0.4000	0.0	13.00	0.0	4.000	0.2000	0.1000E 00	5.000
17.50							

UNIT NUMBER 9

IS A TRMP UNIT AND NEEDS 9 PARAMETERS

0.4000	1.000	0.0	0.0	0.1000E 00	0.1000E 00	3.000	250.0
2000.							

THE SELECTED OUTPUT CODES ARE:

0 0 0 1 0 0 1 6 6 6

****

PLANT NUMBER 4

****

NUMBER OF D-CLASSES= 3
NUMBER OF G-CLASSES= 1
NUMBER OF S-CLASSES= 1

STREAM CONNECTION MATRIX
****

STREAM 1 CONNECTS UNIT 0 TO UNIT 1
STREAM 2 CONNECTS UNIT 0 TO UNIT 6
STREAM 3 CONNECTS UNIT 5 TO UNIT 6
STREAM 4 CONNECTS UNIT 6 TO UNIT 0
STREAM 5 CONNECTS UNIT 2 TO UNIT 5
STREAM 6 CONNECTS UNIT 4 TO UNIT 2
STREAM 7 CONNECTS UNIT 1 TO UNIT 3
STREAM 8 CONNECTS UNIT 2 TO UNIT 1
STREAM 9 CONNECTS UNIT 3 TO UNIT 4
STREAM 10 CONNECTS UNIT 5 TO UNIT 4
STREAM 12 CONNECTS UNIT 3 TO UNIT 0

STREAM WEIGHTINGS
****

USING CRITERION 2 THE FOLLOWING VALUES WERE OBTAINED:

1 1 1 1 1 1 1 1 1 1 1 1

WATER FEEDS
****

UNIT 4 IS FED BY 20.00 WATER AT 20.00 %SOLIDS

RUN DATA
****
****

CONVERGENCE METHOD= 1
MAX NUMBER ITERATIONS= 3
TOLERANCE LIMIT=1C**-4

UNIT NUMBER 1
=============

IS A MIXR UNIT AND NEEDS 6 PARAMETERS

UNIT NUMBER 2
==========

IS A TRMP UNIT AND NEEDS 9 PARAMETERS

0.5000 2000.	3.000	0.0	0.0	0.2000	0.0	4.000	100.0

UNIT NUMBER 3
==========

IS A TRMP UNIT AND NEEDS 9 PARAMETERS

0.5000 2000.	3.000	0.0	0.0	0.2000	0.0	4.000	100.0

UNIT NUMBER 4
==========

IS A MIXR UNIT AND NEEDS 0 PARAMETERS

UNIT NUMBER 5
==========

IS A TRMP UNIT AND NEEDS 9 PARAMETERS

0.5000 2000.	3.000	0.0	0.0	0.2000	0.0	4.000	100.0

UNIT NUMBER 6
==========

IS A MIXR UNIT AND NEEDS 0 PARAMETERS

THE SELECTED OUTPUT CODES ARE:

3 3 0 3 3 3 0 0 3 0

RUN DATA
****
****

CONVERGENCE METHOD= 3
MAX NUMBER ITERATIONS= 8
TOLERANCE LIMIT=10**-4

UNIT NUMBER 1
==========

IS A MIXR UNIT AND NEEDS 0 PARAMETERS

UNIT NUMBER 2
==========

IS A TRMP UNIT AND NEEDS 9 PARAMETERS

0.4000							
2000.	4.000	0.0	0.0	0.2000	0.0	3.500	100.0

UNIT NUMBER 3
==========

IS A TRMP UNIT AND NEEDS 9 PARAMETERS

0.4000							
2000.	4.000	0.0	0.0	0.2000	0.0	3.500	100.0

UNIT NUMBER 4
==========

IS A MIXR UNIT AND NEEDS 0 PARAMETERS

UNIT NUMBER 5
==========

IS A TRMP UNIT AND NEEDS 9 PARAMETERS

0.4000							
2000.	4.000	0.0	0.0	0.2000	0.0	3.500	100.0

UNIT NUMBER 6
==========

IS A MIXR UNIT AND NEEDS 0 PARAMETERS

THE SELECTED OUTPUT CODES ARE:

0 0 0 3 3 3 0 0 3 0

/PAGE

(iii) OUTPUT FROM ORDERING PHASE

/P PROT

PLANT NUMBER 3
****
****

NODE NUMBER 1
****

YEARS 1 9
UNIT ORDER
2 1 3 9 11 12 5

NODE NUMBER 2
****

YEARS 16
UNIT ORDER
6 8 10

PLANT NUMBER 2
****
****

NODE NUMBER 1
****

YEARS 13 14
UNIT ORDER
2 1 4 8

NODE NUMBER 2
****

YEARS 18
UNIT ORDER
5 7 9

PLANT NUMBER 4
****
****

NODE NUMBER 1
****

YEARS 6
UNIT ORDER
2 1 3 5 4

NODE NUMBER 2
****

YEARS 0
UNIT ORDER
6

/FACE

(iv) OUTPUT FROM CALCULATION PHASE

```
*****************************************************************************

/P PHC

*****************************************************************************
                          PLANT NUMBER   3
*****************************************************************************

                    RUN NUMBER  1
                    ************

                    NODE NUMBER   1
                    ===============

                    AFTER  1 ITERATIONS THE RMS ERROR IS      0.0000
                    ==========================================

                    NODE NUMBER   2
                    ===============

                    AFTER  4 ITERATIONS THE RMS ERROR IS      0.0000
                    ==========================================


                    RESULTS FOR PLANT   3 RUN   1
                    *****************************

          THE WATER FEED TO UNIT  6 IS  50.00

>>>>>>>>FEED STREAM  2 CONTAINS 100.0      SOLIDS AND 566.7      WATER
 MASS IN EACH CATEGORY:
                                          D-CLASSES
                    1         2         3         4

SCL 1 GCL 1       0.0       2.00      3.00      3.75
SCL 1 GCL 2      23.75     34.00      8.00      1.50
SCL 1 GCL 3       1.25      4.00      5.00      9.75

                  VALU      WSTE

     MASSES:     42.38     57.63
    GRADE %:     42.37     57.62

<<<<<<OUTPUT STREAM  3 CONTAINS 84.00      SOLIDS AND 327.7      WATER
 MASS IN EACH CATEGORY:
                                          D-CLASSES
                    1         2         3         4

SCL 1 GCL 1       0.0       1.57      2.93      3.59
SCL 1 GCL 2       0.0      25.72      7.76      1.44
SCL 1 GCL 3       0.0       2.94      8.69      9.38

                  VALU      WSTE

     MASSES:     25.53     38.47
    GRADE %:     39.89     60.11
 % RECOVERY:     60.25     66.75
```

<<<<<<OUTPUT STREAM 5 CONTAINS 16.53 SOLIDS AND 155.2 WATER

MASS IN EACH CATEGORY:

	D-CLASSES			
	1	2	3	4
SCL 1 GCL 1	0.00	0.25	0.04	0.17
SCL 1 GCL 2	12.68	2.46	0.06	0.04
SCL 1 GCL 3	0.40	0.18	0.04	0.17

	VALU	WSTE
MASSES:	8.18	8.41
GRADE %:	49.13	50.87
% RECOVERY:	19.17	18.89

<<<<<<OUTPUT STREAM 17 CONTAINS 19.47 SOLIDS AND 133.8 WATER

MASS IN EACH CATEGORY:

	D-CLASSES			
	1	2	3	4
SCL 1 GCL 1	0.00	0.28	0.04	0.05
SCL 1 GCL 2	2.88	5.76	1.24	6.22
SCL 1 GCL 3	0.22	0.65	0.49	0.80

	VALU	WSTE
MASSES:	8.72	10.75
GRADE %:	44.79	55.21
% RECOVERY:	20.56	18.65

++++++++TEAR STREAM 1 CONTAINS 129.6 SOLIDS AND 819.2 WATER

MASS IN EACH CATEGORY:

	D-CLASSES			
	1	2	3	4
SCL 1 GCL 1	0.00	2.57	3.66	4.47
SCL 1 GCL 2	26.64	46.76	9.71	1.80
SCL 1 GCL 3	1.42	5.67	16.88	11.72

	VALU	WSTE
MASSES:	55.86	74.04
GRADE %:	42.87	57.13

++++++++TEAR STREAM 7 CONTAINS 11.28 SOLIDS AND 93.13 WATER

MASS IN EACH CATEGORY:

	D-CLASSES			
	1	2	3	4
SCL 1 GCL 1	0.00	0.19	0.03	0.04
SCL 1 GCL 2	0.33	1.69	0.05	0.02
SCL 1 GCL 3	0.31	0.16	0.04	0.12

	VALU	WSTE
MASSES:	5.46	5.82
GRADE %:	48.40	51.60

********TEAR STREAM 16 CONTAINS 16.27 SOLIDS AND 89.21 WATER

MASS IN EACH CATEGORY:

	D-CLASSES			
	1	2	3	4
SOL 1 GOL 1	0.00	0.00	0.02	0.01
SOL 1 GOL 2	7.13	4.69	1.30	1.45
SOL 1 GOL 3	0.55	0.86	0.21	0.22

	VALU	WSTE
MASSES:	7.41	6.86
GRADE %:	48.66	54.44

RUN NUMBER 2
****

>>>>>>>>FEED STREAM 2 CONTAINS 100.0 SOLIDS AND 566.7 WATER

NODE NUMBER 1
==========

AFTER SETTING UP THE RMS ERROR IS 0.0000
==========

UNIT 2 OUTPUT STREAM 3

CONTAINS: 64.00 SOLIDS AND 327.7 WATER

UNIT 2 OUTPUT STREAM 4

CONTAINS: 66.61 SOLIDS AND 491.5 WATER

UNIT 1 OUTPUT STREAM 6

CONTAINS: 21.06 SOLIDS AND 156.6 WATER

UNIT 1 OUTPUT STREAM 8

CONTAINS: 44.55 SOLIDS AND 294.9 WATER

UNIT 3 OUTPUT STREAM 10

CONTAINS: 55.62 SOLIDS AND 368.0 WATER

UNIT 3 OUTPUT STREAM 9

CONTAINS: 16.93 SOLIDS AND 155.2 WATER

UNIT 9 OUTPUT STREAM 10

CONTAINS: 39.29 SOLIDS AND 232.6 WATER

UNIT 11 OUTPUT STREAM 9

CONTAINS: 11.28 SOLIDS AND 53.13 WATER

UNIT 11 OUTPUT STREAM 12

CONTAINS: 28.01 SOLIDS AND 139.7 WATER

UNIT 12 OUTPUT STREAM 7

CONTAINS: 13.47 SOLIDS AND 83.81 WATER

UNIT 12 OUTPUT STREAM 13

CONTAINS: 6.545 SOLIDS AND 55.88 WATER

UNIT 5 OUTPUT STREAM 1

CONTAINS: 129.6 SOLIDS AND 819.2 WATER

NODE NUMBER 2

AFTER SETTING UP, THE RMS ERROR IS 0.0000

UNIT 6 OUTPUT STREAM 14

CONTAINS: 35.74 SOLIDS AND 223.0 WATER

UNIT 8 OUTPUT STREAM 15

CONTAINS: 35.74 SOLIDS AND 223.0 WATER

UNIT 10 OUTPUT STREAM 16

CONTAINS: 16.27 SOLIDS AND 89.21 WATER

UNIT 10 OUTPUT STREAM 17

CONTAINS: 19.47 SOLIDS AND 133.8 WATER

```
*****************************************************************
                    PLANT NUMBER   2
*****************************************************************

                RUN NUMBER   1
                *************

                NODE NUMBER   1
                ==============

                AFTER SETTING UP,THE RMS ERROR IS      2.5143
                ==============================================

                AFTER   1 ITERATIONS THE RMS ERROR IS      0.0000
                ==============================================

                NODE NUMBER   2
                ==============

                AFTER SETTING UP,THE RMS ERROR IS      1.8834
                ==============================================

                AFTER   1 ITERATIONS THE RMS ERROR IS      0.0000
                ==============================================


                RESULTS FOR PLANT   2 RUN   1
                *****************************

        THE WATER FEED TO UNIT   2 IS   20.00

>>>>>>>>FEED STREAM   1 CONTAINS 64.00      SOLIDS AND 327.7      WATER
 MASS IN EACH CATEGORY:
                                          D-CLASSES
                    1         2         3

SCL 1 GCL 1       1.41      2.76      3.58
SCL 1 GCL 2      12.86      3.88      0.72
SCL 1 GCL 3       0.29      0.43      0.0
SCL 2 GCL 1       0.16      0.15      0.0
SCL 2 GCL 2      12.86      3.88      0.72
SCL 2 GCL 3       2.04      8.26      9.38

                 VALU      WSTE

     MASSES:     25.53     38.47
    GRADE %:     39.89     60.11

>>>>>>>>FEED STREAM   2 CONTAINS 3.453      SOLIDS AND 155.2      WATER
 MASS IN EACH CATEGORY:
                                          D-CLASSES
                    1         2         3

SCL 1 GCL 1       0.26      0.04      0.17
SCL 1 GCL 2       1.23      0.03      0.02
SCL 1 GCL 3       0.02      0.00      0.0
SCL 2 GCL 1       0.03      0.00      0.0
SCL 2 GCL 2       1.23      0.03      0.02
SCL 2 GCL 3       0.16      0.04      0.17

                 VALU      WSTE

     MASSES:      1.78      1.67    260.
    GRADE %:     51.60     48.40
```

<<<<<<<OUTPUT STREAM 15 CONTAINS 62.30 SOLIDS AND 359.2 WATER

MASS IN EACH CATEGORY:

	D-CLASSES		
	1	2	3
SOL 1 GOL 1	1.66	4.72	2.25
SOL 1 GOL 2	13.67	3.63	0.57
SOL 1 GOL 3	0.31	0.40	0.00
SOL 2 GOL 1	0.18	0.14	0.00
SOL 2 GOL 2	13.67	3.63	0.57
SOL 2 GOL 3	2.75	7.61	7.10

	VALU	WSTE
MASSES:	26.07	36.23
GRADE %:	41.86	58.16
% RECOVERY:	55.45	90.28

<<<<<<<OUTPUT STREAM 20 CONTAINS 5.145 SOLIDS AND 143.7 WATER

MASS IN EACH CATEGORY:

	D-CLASSES		
	1	2	3
SOL 1 GOL 1	0.01	0.10	0.45
SOL 1 GOL 2	0.22	0.28	0.17
SOL 1 GOL 3	0.01	0.04	0.00
SOL 2 GOL 1	0.00	0.01	0.00
SOL 2 GOL 2	0.22	0.28	0.17
SOL 2 GOL 3	0.05	0.69	2.46

	VALU	WSTE
MASSES:	1.24	3.90
GRADE %:	24.14	75.86
% RECOVERY:	4.55	5.72

++++++++TEAR STREAM 13 CONTAINS 16.18 SOLIDS AND 231.8 WATER

MASS IN EACH CATEGORY:

	D-CLASSES		
	1	2	3
SOL 1 GOL 1	0.11	0.43	0.84
SOL 1 GOL 2	1.99	1.24	0.27
SOL 1 GOL 3	0.05	0.16	0.00
SOL 2 GOL 1	0.01	0.02	0.00
SOL 2 GOL 2	1.99	1.24	0.27
SOL 2 GOL 3	0.47	3.16	4.18

	VALU	WSTE
MASSES:	4.71	11.47
GRADE %:	29.13	70.87

++++++++TEAR STREAM 14 CONTAINS 348.1 SOLIDS AND 869.2 WATER

MASS IN EACH CATEGORY:

	D-CLASSES		
	1	2	3
SOL 1 GOL 1	26.48	28.60	28.11
SOL 1 GOL 2	123.26	22.62	2.76
SOL 1 GOL 3	2.06	1.66	0.00
SOL 2 GOL 1	1.52	0.75	0.00
SOL 2 GOL 2	65.64	5.52	1.05
SOL 2 GOL 3	8.66	11.58	5.80

	VALU	WSTE
MASSES:	200.27	147.88
GRADE %:	57.58	42.42

281.

```
********TEAR STREAM 1E CONTAINS 9.784      SOLIDS AND 95.79      WATER
 MASS IN EACH CATEGORY:

                                        D-CLASSES
                  1         2         3
SCL 1 GCL 1      0.12      0.32      0.13
SCL 1 GCL 2      1.93      0.88      0.05
SCL 1 GCL 3      0.05      0.11      0.00
SCL 2 GCL 1      0.01      0.02      0.00
SCL 2 GCL 2      1.93      0.88      0.05
SCL 2 GCL 3      0.44      2.17      0.71

                 VALU      WSTE

    MASSES:      3.45      6.33
   GRADE %:     35.26     64.72

*****************************************************************
                         PLANT NUMBER    4
*****************************************************************

                  RUN NUMBER   1
                  *************

>>>>>>>>FEED STREAM   1 CONTAINS 16.37      SOLIDS AND 133.8      WATER
 MASS IN EACH CATEGORY:
                                        D-CLASSES
                  1         2         3
SCL 1 GCL 1      6.52      3.17      6.07

>>>>>>>>FEED STREAM   2 CONTAINS 5.145      SOLIDS AND 143.7      WATER
 MASS IN EACH CATEGORY:
                                        D-CLASSES
                  1         2         3
SCL 1 GCL 1      0.51      1.39      3.25

                  NODE NUMBER    1
                  ==============

                  AFTER SETTING UP,THE RMS ERROR IS      0.3733
                  ==============================================

        THE WATER FEED TO UNIT   4 IS -5.512

                  AFTER   1 ITERATIONS THE RMS ERROR IS      0.0383
                  ==============================================

        THE WATER FEED TO UNIT   4 IS -31.01

                  AFTER   2 ITERATIONS THE RMS ERROR IS      0.0094
                  ==============================================

        THE WATER FEED TO UNIT   4 IS -32.12

                  AFTER   3 ITERATIONS THE RMS ERROR IS      0.0023
                  ==============================================

        THE WATER FEED TO UNIT   4 IS -32.40
******** ALLOWABLE NUMBER OF ITERATIONS EXEEDED FOR PLANT   4 AT NODE
```

RUN NUMBER 2
****

NODE NUMBER 1
==========

AFTER SETTING UP,THE RMS ERROR IS 0.0045
==========

THE WATER FEED TO UNIT 4 IS -17.19

AFTER 1 ITERATIONS THE RMS ERROR IS 0.0006
==========

THE WATER FEED TO UNIT 4 IS -17.25

AFTER 2 ITERATIONS THE RMS ERROR IS 0.0000
==========

THE WATER FEED TO UNIT 4 IS -17.26

++++++++TEAR STREAM 6 CONTAINS 17.39 SOLIDS AND 69.56 WATER
MASS IN EACH CATEGORY:

D-CLASSES

	1	2	3
SOL 1 GOL 1	6.83	3.78	7.08

NODE NUMBER 2
==========

UNIT 6 OUTPUT STREAM 4

CONTAINS: 20.18 SOLIDS AND 154.8 WATER
MASS IN EACH CATEGORY:

D-CLASSES

	1	2	3
SOL 1 GOL 1	7.03	5.15	7.97

RESULTS FOR PLANT 4 RUN 2
****

<<<<<<OUTPUT STREAM 4 CONTAINS 20.18 SOLIDS AND 154.8 WATER
MASS IN EACH CATEGORY:

D-CLASSES

	1	2	3
SOL 1 GOL 1	7.03	5.15	7.97

<<<<<<OUTPUT STREAM 12 CONTAINS 1.367 SOLIDS AND 105.3 WATER
MASS IN EACH CATEGORY:

D-CLASSES

	1	2	3
SOL 1 GOL 1	0.00	0.01	1.35

/PAGE

Author Ford Merrill Anthony
Name of thesis Simulation of ore dressing plants. 1979

PUBLISHER:
University of the Witwatersrand, Johannesburg
©2013

LEGAL NOTICES:

Copyright Notice: All materials on the University of the Witwatersrand, Johannesburg Library website are protected by South African copyright law and may not be distributed, transmitted, displayed, or otherwise published in any format, without the prior written permission of the copyright owner.

Disclaimer and Terms of Use: Provided that you maintain all copyright and other notices contained therein, you may download material (one machine readable copy and one print copy per page) for your personal and/or educational non-commercial use only.

The University of the Witwatersrand, Johannesburg, is not responsible for any errors or omissions and excludes any and all liability for any errors in or omissions from the information on the Library website.