

https://dspace.org/

# Oestrogen receptor mutations and their influence on breast cancer growth

**Amoils, Karin Dagmar**

**2012-03-12**
http://hdl.handle.net/10539/11415

Downloaded from a DSpace repository. https://dspace.org/

# CHAPTER THREE

# MATERIALS AND METHODS

## 3.1

## Sources of Tissue and Cell Lines

Samples were taken from 61 patients presenting at the Chris Hani Academic Hospital Johannesburg with primary breast cancer. The bre needle aspirates (FNAs) were taken from patients by routine clinical and placed immediately into lysis buffer containing guanidi mercaptoethanol (as provided by the RNeasy mini kit from stored at -70°C. An aliquot of each FNA was also sent for routine cytology to the presence of tumour cells within each sample. Normal were obtained from 10 patients undergoing breast reducti stored in the same way. Ethical approval was obtained a informed consent (Appendix 1).

The MCF-7 breast carcinoma cell line from the American Typ Collection (ATCC-22) was used as a positive control and wa maintained in Earle s Minimal Essential Medium (EMEM) Technologies, UK) with 10% fetal calf serum (FCS) (Delta Biopro ducts, Kemp Park, South Africa). The T-47D breast carcinoma cell line (ATCC-133) was maintained in RPMI-1640 medium (Gibco BRL, Life Technologies,

FCS supplemented with 2 IU insulin/ml (1 mg/ml Humulin N, Eli Lilly, Isando, South Africa) and 1mM Sodium Pyruvate (Gibco BRL).

## 3.2 Ribonucleic acid extraction

### 3.2.1 Human breast tissue

Ribonucleic acid (RNA) was extracted from human breast tissue samples using RNeasy Mini Kit (Qiagen, Germany). The samples were collected in a lysis buffer containing guanidinium thiocyanate and β-mercaptoethanol as provided in the kit in order to protect the RNA. The tissue samples were manually homogenized using scalpel blades and the lysates were pipetted directly onto Qiashredder (Qiagen, Germany) spin columns and centrifuged in a microcentrifuge (Eppendorf centrifuge 5402, Eppendorf, Hamburg, Germany) for 2 minutes at room temperature (14000 rpm). One volume of 70% ethanol was added to the lysate and mixed well by pipetting to create conditions that promote selective binding to the RNeasy silica-gel membrane. Each sample was then applied to an RNeasy mini column (Qiagen, Germany), contaminants were washed away and RNA was eluted from the columns with RNase-free water according to the manufacturer's instructions. The RNA was stored at -70°C until required.

### 3.2.2 Tissue culture cells

Medium was decanted from the flasks and the cells were w
buffered saline (PBS) (Appendix 3). 1ml lysis buffer containing gua
thiocyanate and β-mercaptoethanol (Buffer RLT, Qiagen, Germany)
each flask and the lysed cells were poured into Eppendorf t
pipetted onto Qiashredder (Qiagen, Germany) spin columns and centrifuge
microcentrifuge for 2 minutes at maximum speed (14000 r
70% ethanol was added to each homogenized lysate to adju
Each sample was applied to an RNeasy minidspin RNA column, w
eluted from the columns with water and treated with RNase according to manufacturer s
instructions. The RNA was stored at -70°C until required.

### 3.3 Reverse transcription

The extracted RNA was converted into complementary DNA
to allow for the DNA polymerase, used in the PCR, to function
avian myeloblastosis virus (AMV) reverse transcriptase was

A 20µl reverse transcription reaction was performed for e
culture sample prior to first round nested PCR. 10µl of 2x PCR buffer
[500 mM KCl; 100 mM Tris-HCl (pH 8.4); 0.1% gelatin] and 3mM $MgCl_2$ added to

(25 mM), (10 mM) dNTP mix (1 mM) of each deoxynucleotide triphos
(Promega, Madison, USA) was made up in (20 mM) RNasin
(Promega, USA), oligo(dT)$_{15}$ (25 pmol/ml), DEPC-treated water and 1
(15 U) of AMV reverse transcriptase (Promega). As the F
small and thus the concentration of RNA extracted was low
quantitate the RNA spectrophotometrically for fear of losing
random amount of RNA was therefore added to the reverse
reaction and mixed well. Initially, the RNA samples were
oligo(dT)$_{15}$ primer at 70°C for 5 min and cooled slowly to room ten
facilitate primer annealing. After the addition of the rem
reactions were incubated at 37°C for 1 hour. The reverse transcriptas
was inactivated by heat for 5 min and cooling on ice. The c
allowed to cool for 1 hour before amplification by PCR was

A reverse transcription control reaction was performed s
addition of DEPC-treated water in place of RNA prior to rev
transcribing in all cases.

## 3.4

## Polymerase chain reaction

The Polymerase Chain Reaction (PCR) is extremely sens
precautions were taken to avoid contamination of extraneou
PCR reagent and amplification of samples were assigned to

areas. Pipettes were designated for PCR preparation, sepa
general use and never used for pipetting PCR product
contaminating DNA source. Surfaces were regularly wiped dow
1 M HCl and gloves were changed frequently. All primers used were synthes
by Invitrogen Life Technologies (Paisley, UK).

### 3.4.1

### PCR of HPRT housekeeping gene

Hypoxanthine phosphoribosyltransferase (HPRT) is a soluble
cytoplasmic enzyme that catalyses the conversion of prefe
and hypoxanthine to guanylic and inosinic acids in the pres
pyrophosphate (Kimmel, 1986). The promoter of this gene res
those of other characterized housekeeping genes and the
is constitutively expressed (Patel, 1986). The entire gene is 42 kilobase
in length and is organized into 9 exons and 8 introns (Kimmel, 1986).

In order to assess the integrity of the RNA extracted from the
and the tissue culture cells each sample was reverse trans
the HPRT housekeeping gene. Samples positive for HPRT w
for EAR and EBR mutation

### 3.4.1.1

### HPRT primers

The forward primer, HPRT-3, 5CPAT CGAAGTGTTGGATA3T, located in exon 7, begins at map position 604 (Jolly et al. 1983) of the HPRT gene reverse primer, HPRT-4, 5PARGTTTCAATGTTTCACTCAA3T, begins at map position 10 on the reverse cDNA strand and is located in e

### 3.4.1.2

### HPRT PCR amplification conditions

20ºm of cDNA product was amplified in a volume containing 1 Taq polymerase (Gibco BRL, Life Technologies, Ltd.); 1 primer HPRT-4, 5ºm of 10 x PCR buffer (200 mM Tris-HCl [pH 8.4]; 500mM KCl and 1.5mM final concentration of MgCl$_2$. All dNTPs were added a reaction was performed for 30 cycles in a programmable (Hybaid, Middlesex, UK). Initial heat denaturation at 96ºC for 10 min, a program of 30 cycles of 94ºC for 1 min, 56ºC for 30 seconds, 72ºC for 1 min 30 seconds and a final extension period of 10 min at 72ºC was performed.

### 3.4.1.3 Visualization of HPRT PCR product

The PCR product was visualized by running on a 2% agaros
ethidium bromide (10mg/ml) in TAE buffer at pH 8.0. Volta
hour. 50bp molecular weight ladder (Promega, Madison,
simultaneously and the gel was viewed on an ultraviolet light box and
photographed. The HPRT PCR product was viewed as a ban
(Figure 1.6).

## 3.4.2 Nested and Touchdown PCR

In situations where there are problems with the quantity an
to be amplified one approach to amplifying a product reliably is
PCR. Generally, the sample is first amplified using 20-30 cycles of PCR
primer set. A very small aliquot of this reaction is then a
using an inner primer set. The inner set of primers is targeted within the
DNA so that the complementary sequence for the inner pri
the PCR product obtained in the first PCR reaction.

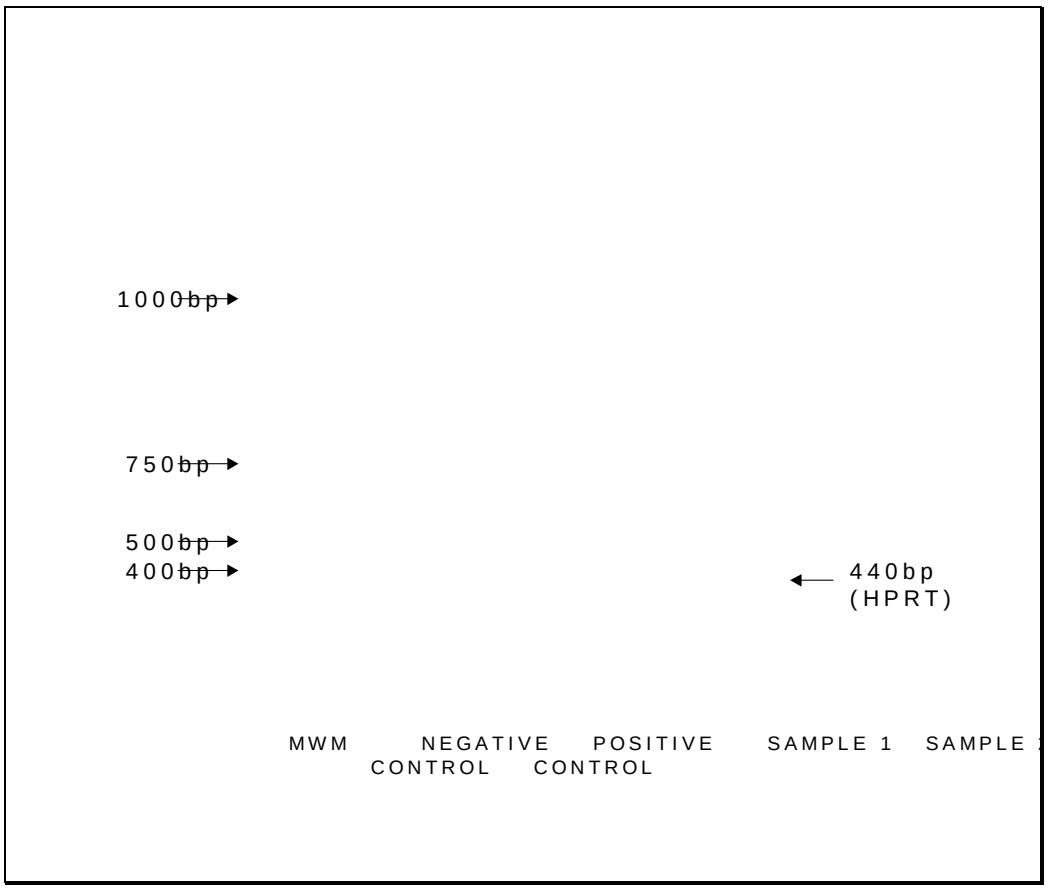


Figure 6 Visualization of HPRT products on an agarose gel

50bp ladder (Promega, SA) (lane 1); negative control (lan
HPRT 440bp PCR product 3 (lane 5)

Nested PCR is extremely sensitive and as the cervical sam were very small, and thus the RNA obtained from them also minimal, ERa and ERb were designed in order to be able to PCR the var less material.

Artefacts may occur where incompletely extended produc rehybridize to an adjacent segment of DNA to prime an uni sequence internal to one or both primers will still be prese will differ. The appearance of spurious smaller bands in th to mispriming by one or both of the oligonucleotide amplimers f the reaction products and may be due to an advantage that products enjoy over the longer correct product during re solution, which takes advantage of the exponential nature of PCR re touchdown PCR. Using this technique the annealing tempe is decreased 2°C every second cycle from 65°C to a touchdown at a rele annealing temperature. Any difference in Tm between the correct and incor annealing will give an advantage of 2 to the correct produc al, 1991).

### 3.4.2.1

### First Round Nested PCR of the ERa and ERb

The first round of nested PCR of the ERa and ERb was divided into two ar namely ERa DNA binding domain (ERa DBD) and the ERa ligand binding domain (ERa LBD). ERa DBD incorporated exons 1 to 6 and ERa LBD region incorporate

exons 3 to 8 (Fig. 17). In ðaDBD Touchdown PCR an Enhancer s
(Gibco BRL, Life Technologies, UK) was used to facilitate efficient amplific
the problematic template.

PCR parameters for first round nested PCR reflected ðaDBD in Tab
1.

### 3.4.2.1.1

### ERa ðaDNA Binding Domain PCR

The sense ðaDBD primer, ERA173 (5CTGAGCCTTCT3), corresponds to bases 1901-1973 in exon 1 of the (Green et al. 1986). ERA1484R (5CATTTTCCCTGGT3) represents the anti-strand of the ðaDNA bases 1484-1467 in exon 6 of the (Figure 17).

20ðm of cDNA was amplified in a 50 ðm reaction volume containing 1 ðM primer ERA173, 1 ðM primer ERA1484R, 1 ðm of 105x PCR buffer (200 mM Tris 8.4]; 500mM KCl); 0.78mM 75 $MgCl_2$ ðm of 10x PCR Enhancer Solution (G
BRL). No additional dNTPs were added and touchdown PCR
programmable DNA Thermal Cycler (Hybaid, Middlesex, UK).

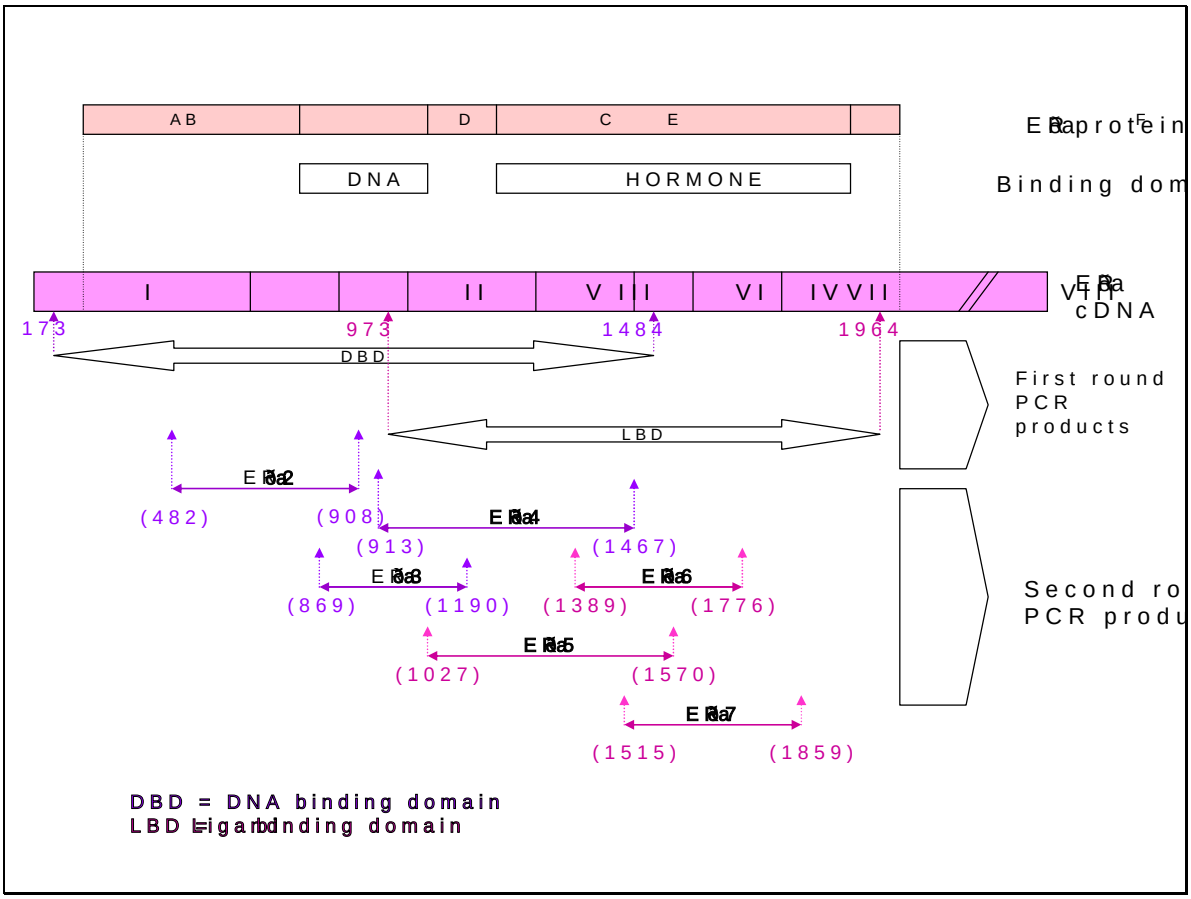


Figure 1. Positions of nested PCR primers (according to Green 1986).

After an initial heat denaturation at 96 °C for 10 min an annealing temperatu of 65 °C for 1 min 1 Unit of Tampolymerase (Gibco BRL, Life Technolo was added and the reaction allowed to extend at 72 °C for 2 min. Cycles consis of denaturation at 94 °C for 1 min, annealing for 1 min (where th temperature was decreased by 2 °C every 2 cycles starting from 6 extension at 72 °C for 2 min were carried out until the anneali reached 57 °C. A further 17 cycles were carried out with an anne of 65 °C and a final extension period of 10 min at 72 °C was performed.

The resulting PCR product of 1312bp was then used in seco of exons 2, 3 and 4 as in 3.4.2.2.1. to 3.4.2.2.3.

### 3.4.2.1.2

### ERa Ligand Binding Domain PCR

The sense LBD primer, ERA973 (5-AGTGGGAATGATGA-3A), GG corresponds to bases 973-990 in exon 3 of the ER (Figure 17). ERA1964 (5-AATGCGATGAAGTA-3G) AGC represents the antisense strand of the ER cDNA bases 1964-1947 in exon 8 of the ER (Figure 17).

20 ng of cDNA was amplified in reaction volume containing 1 primer ERA973 and primer ERA964R and 3 of 510 x PCR buffer (200mM HCl [pH 8.4]; 500 mM KCl). No additional MgCl2 was added and t reaction was performed in a DNA Thermal Cycler (Hyba

Middlesex, UK). After an initial heat denaturation at 90°C for 10 min the temperature was reduced to an annealing temperature of 47°C for 1 min before the addition of Taq polymerase (Gibco BRL, UK). An extension time of 72°C was performed and reaction was allowed to run for 30 min, 47°C for 1 min and 72°C for 2 min. A final extension of 72°C for 5 min was then performed.

The resulting 922bp PCR product was used in second round nested PCR of exons 5, 6 and 7 as in 3.4.2.2.4. to 3.4.2.2.6.

### 3.4.2.2.

### Second Round Nested PCR of the ER

ER exons 2, 3 and 4 utilized the first round DBD PCR product as the second round PCR (Table 2). The first round DBD PCR product was the template for second round PCR of ER exons 5, 6 and 7 (Table 3). All Figures second round PCR products were visualized as described in 3.5. The bands viewed were excised and purified using the phenol freeze method (3.6) prior to quantitation (3.7) and sequence in order to confirm the nature of the product observed (3.8).

Table 1. PCR parameters for nested RT-PCR and EMSA.

| Primer Name | Primer seq 5 >>3 | Primer positio | $MgCl_2$ conc (mM)* | Ann. Temp (°C) | ER detecte | area regio detecte | Produc size (v (bp) |
|---|---|---|---|---|---|---|---|
| ERA173 | GGTTTCTG -CCTTCT | 173-190 | 0.78 | TD 65-55 | ERα | DBD | 1312 |
| ERA148 | CACATTTT -CTGGTTC | 146-84 | | | | | |
| ERA973 | AGTGGGAA -ATGAAAG | 973-990 | - | 47 | ERα | LBD | 922 |
| ERA196 | AATGCGAT -AGTAGA | 194-64 | | | | | |

TD = Touchdown

* $MgCl_2$ concentration in addition to that already present from

In each case, if the original sample size was too small and
product was observed after electrophoresis, the second
repeated as described replacing the first round product wit
product.

### 3.4.2.2.1

### PCR of ER exon 2

The sense Primer, ERA-482 (5 GGCTGCGGCTG 3), corresponds to bases 4982 in exon 1 of the ER gene. ERA908-R (5 GGTTGGTGGCTCACA 3) represents the antisense strand of the ER cDNA bases 9891 in exon 3 of the ER gene (Figure 17; Table 2).

5 ml of first round ER cDNA PCR product was amplified in a 50 ml reaction volume containing 1 mM primer ERA482; 1 mM primer ERA908R; 10 x PCR buffer (Tris-HCL, KCL, $(NH_4)_2SO_4$, 15mM $MgCl_2$ [pH 8.7]; Qiagen, Germany); 20 mM dNTP mix, 10 x solution Q (Qiagen, Germany) and 1 Unit Taq DNA polymerase (Qiagen, Germany). The reaction was performe DNA Thermal Cycler (Hybaid, Middlesex, UK) with an initial h temperature of 95 °C for 15 min followed by 30 cycles of denaturat 1 °C for 1 min, annealing at 51 °C for 1 min and extension at 72 °C for 1 min. A final extens time of 10 min at 72 °C was then performed.

The expected PCR product size was 427 base pairs (bp). A
would reveal a PCR product of 236 bp.

### 3.4.2.2.2

### PCR of ERa exon 3

The sense ERa 3 primer, ERA 8-69 (5 AGGACATAA-3 GACT), corresponds to bases 8-69 in exon 2 of the ER gene. ERA 119-0R (5 ACAAGGCACTGAC-3 CAT) represents the anti-sense strand of DNA ER bases 1-119 in exon 4 of the ER gene (Figure 17; Table 2).

2 ng of first round ER DNA PCR product was amplified in a 50 volume containing 1 µM primer ERA 8-69; 1 µM primer ERA 119-0R; 5 10 x PCR buffer (Qiagen, Germany); 0.5 mM MgCl2; 5 mM MgCl2 mix; 5 x solution Q (Qiagen, Germany) and 1 Unit HDNA Taq polymerase (Qiagen, Germany). The reaction was performed in a PCR Thermal Cycler (Hybrid, Middlesex, UK) with an initial denaturation for 15 min followed by 95 cycles of denaturation for 1 min, annealing for 1 min and extension for 1 min. A final extension at 72 °C for 10 min was then performed.

The expected PCR product size was 322 bp. An absence (ER±3) would produce a band 205 bp in size.

3.4.2.2.3

PCR of the Exon 4

The sense of the ER primer, ERA9-13 (5 ACCATTGATAAAA-3 C), corresponds to bases 9131 in exon 3 of the ER gene. ERA146-7R (5 CTGTCCAAGAGCAA-3 GTTAG) represents the antisense strand of the ER cDNA bases 14679 in exon 5 of the ER gene (Figure 17; Table 2).

2 m of first round DNA PCR product was amplified in a 50 volume containing 1 M primer ERA9-13; 1 M primer ERA146-7R; 5 10 x PCR buffer (Qiagen, Germany); 1 mM dNTP mix; 5 x solution Q (Qiagen, Germany) and 1 Unit HDNA polymerase (Qiagen, Germany). A Thermal Cycler (Hybaid, Middlesex, UK) with an initial denaturation step of 95 was followed by 30 cycles of denaturation at 94 °C for 1 min, 51 °C for 1 min and extension at 72 °C for 1 min. The PCR program was completed with an extension time of 10 °C.min at 72

The size of the expected PCR product was 555bp and a of exon 4 (ER"4) was expected at 219bp.

Table 2. PCR parameters for second round nested ER domain-RT-PCR analysis.

| Primer Name | Primer seq 5 >>3 | Primer Positio | Ann. Temp (°C) | ERα region detect | Produ size (wt) (bp) | Product size (variant (bp) |
|---|---|---|---|---|---|---|
| ERA482 | TCTGAGGC -CGGCGT | 482-498 | 55 | ERα2 | 427 | 236 |
| ERA908 | GGTTGGTG -TGGAACCA | 891-908 | | | | |
| ERA869 | ATTCAAGG -ATAACGA | 869-887 | 51 | ERα3 | 322 | 205 |
| ERA119 | ACAAGGCA -GACCATC | 117-1319 | | | | |
| ERA913 | CACCATTG -AAAAACAG | 913-931 | 51 | ERα4 | 555 | 219 |
| ERA146 | CTGTCCAA -GCAAGTTA | 144-1467 | | | | |

3.4.2.2.4

PCR of Exon 5

The sense 5 ER primer, ERA1027 (5 GACAAGCGCCAGAGAG 3), is located between bases 1027 and 1046 in exon 4 of the ER. The reverse primer ERA1570 (5 CACAACTCCTCTCCTCTGCA 3) corresponds to base 1551 to 1570 in exon 6 on the strand of the ER (Figure 17; Table 3).

3 ln of first round DEP PCR product amplified in a 50 ln reaction volume containing 1 ln primer ERA1027; 1 ln primer ERA1570 R; 5 ln x PCR buffer (Qiagen, Germany); 1 ln 200 mM dNTP mix; 5 ln x solution Q (Qiagen, Germany) and 1 Unit of DNA polymerase. The reaction was p in a programmable DNA thermal Cycler (Hybaid, Middlesex denaturation at 95 °C for 15 min. This was followed by 30 cycles of 94 °C for 1 min, annealing at 61 °C for 1 min and extension at 72 °C for 1 min. A final extension of 72 °C for 10 min completed the program.

The ER+ exon 6 PCR product size was 554 bp. ER+ would reveal a product o 405 bp.

3.4.2.2.5

PCR of Exon 6

The sense primer, ERA-1389 (5 ATGATTGGTCTCGTCT 3), is located between bases 1389 and 1409 in exon 5 of the ERA-1776 (5 CTGATGTGGGAGAGGATC 3) corresponds to bases 1759 to 1776 in the antisense strand of DNA (Figure 17; Table 3).

3 ln of first round PCR product was amplified in a volume containing 1 ng primer ERA-1389, 1 ng primer ERA-1776 of a 10 x PCR buffer (Qiagen, Germany); 2.5 mM MTPCI in 5 x solution Q (Qiagen, Germany) and 1 Tu DNA Hot Stymerase (Qiagen, Germa The PCR was performed in a programmable DNA Therma Middlesex, UK) an initial denaturation for 15 min followed by cycles of denaturation for 194 min, annealing for 159 min and extension at 72 for 1 min. A final extension time of 10 min subsequently performed.

The size of the exon 6 PCR product was 388 bp. An exon 6 delet a PCR product of 254 bp.

3.4.2.2.6

PCR of ER exon 7

The sense ER primer, ERA1515 (5 GCTACATCATC 3), is located between bases 1515 to 1533 in exon 6 of the ER (5 TCTCCAGCAGCAGGTCA 3). Corresponds to the cDNA bases 1841 exon 8 of the same strand of the ER (Figure 17; Table 3).

3 ml of first round DEPCR product was amplified in a 50 ml reaction volume containing 1 ml primer ERA1515; 1 ml primer ERA1859R; 5 ml of a 10 x PCR buffer (Qiagen, Germany); 2.5 ml MNTP mix; 5 ml 10 x solution Q (Qiagen, Germany) and 1 ml Hot Star Taq DNA polymerase (Qiagen, Germa The PCR reaction was performed on a programmable DN (Hybid, Middlesex, UK) with an initial denaturation time of was followed by 30 cycles of denaturation, at 94°C for 1 min, annealing at 1 min and extension for 1 min. A final extension time of 10 was then performed.

The size of the expected PCR product was 345 bp, A comp ER±"7, would yield a band 161 bp in size.

Table 3. PCR parameters for secondary oligonucleotides targeting ER domain-RT-PCR analysis.

| Primer Name | Primer seq. 5 >>3 | Primer Position | Ann. Temp (°C) | ERα region detect | Product size (wt) (bp) | Product size (variant) (bp) |
|---|---|---|---|---|---|---|
| ERA102 | GAAACACAAG -CAGAG | 102-1046 | 61 | ERα5 | 543 | 405 |
| ERA157 | CACAAACTCC -CCTGC | 155-1570 | | | | |
| ERA138 | TCCTGATGAT -CTCGTC | 138-1409 | 59 | ERα6 | 388 | 254 |
| ERA177 | CTGATGTGGG -GGAT | 175-1776 | | | | |
| ERA1515 | TGCTGGCTAC -ATCTC | 151-1533 | 57 | ERα7 | 345 | 161 |
| ERA185 | TCTCCAGCAG -GTCAT | 184-1859 | | | | |

### 3.4.2.3

### First Round Nested ðbgene PCR of ER

The first round of nested ðbgene PCR involved the PCR of a fragm the ðbgene located between exon 2 and exon 7. Great care primers designed for this PCR in no way sequence from th ERðagene. The first round PCR was (Table 4) ðs Tesilenated ER

The sense ðbgene primer, ERB528 (5 GATGCTCACTTCT, 3 G) is located between bases 528 and 544 (99 a) et al. Ennis 1997 ) ðgain exon 2 (E, 1997) of the ðbgene (Fig 18). The ðbgene primer ERB1481R (5 GAGCATCAGGAGGTTACC) corresponds to bases 1464 to 1481 in the reverse strand ðbgene of the ER

2ðm cDNA was amplified in a 50 ðm reaction volume containing ðM primer 1 ERB528, ðM primer ERB1481R; 3.5 ðhor PCR buffer (-2.0 mM [pH Tris 8.4]; 500mM KCl) and 0.7 mM ðMgCl. No additional dNTPs were added reaction. PCR was performed in a programmable DNA Ther Middlesex, UK). After an initial heat denaturation at 96 ðC for 10 min an annealing temperature of 151 ðC for 1.5 min. Unit DNA of polymerase (Invitrogen, UK) were added and the reaction allowed ðC for 2 min to ex This was followed by 25 cycles of denaturation at 94 ðC for 1 min, annealing at 51 ðC for 1 min extension at 72 ðC for 1 min. A final extension time o 72 ðC completed the reaction.

The resulting PCR product of 954 bp was used in second ro
DNA and ligand binding domains of ER

### 3.4.2.4

### Second Round Nested PCR of ER

The second round of nested PCR of the ER gene utilized the first round
product as a template. One primer set was designed in orde
the ER DNA binding domain between bases 592 and 605 of th
exons 2 and 4 respectively) and one primer set was designed in o
segment of the ER ligand binding domain between bases 1196 an
ER gene (ER exons 6 and 7 respectively) (Figure 18).

#### 3.4.2.4.1

#### PCR of ER DNA binding domain

The sense ER DBD primer, ERB592-(6 GTGTGAAGGATGTA3),GG
corresponds to bases 592 to 609 in exon 2 of the ER 8 0-5 ER(5
TCGGCACTTCTCTG3T) Represents the antirand of ER DNA
bases 7 8 0 5 in exon 4 of the ER gene (Figure 18).

Table 4. PCR parameters for first and second round ERβ RT-PCR analysis.

| Primer N | Primer seq. 5 >>3 | Primer Positio | Ann. Temp (°C) | Area detected | Produc size (wt) (bp) |
|---|---|---|---|---|---|
| ERB528<br><br>ERB1481 | AGGGATGCTCA<br>-TCTGC<br><br>GAGCATCAGGA<br>-TTAGC | 528-544<br><br>1464-1481 | 51 | ERβ1<br>First rou | 954 |
| ERB592<br><br>ERB805R | CGTGTGAAGGA<br>-TAAG<br><br>TCGGCACTTCT<br>-TCT | 592-609<br><br>788-805 | 52 | ERβ DBD | 214 |
| ERB1196<br><br>ERB1417 | GGGGAAATGC<br>-GAAG<br><br>ACCCAAACCAA<br>-CATC | 1196-1211<br><br>1401-1417 | 51 | ERβ LBD | 222 |

5 ml of first round PCR product was amplified in a 50 volume containing 1 mM primer ERB592; 1 mM primer ERB505F; 10 x PCR buffer (200mM Tris [pH 8.4]; 500mM $KCl_2$); 1 mM dNTP mix. The reaction was performed in a programmable DNA Therma Middlesex, UK). After an initial heat denaturation at 90 temperature was reduced to an annealing temperature of 52 before the addition of 1 pol Taq Ultimerase (Invitrogen, UK). An extension at 72 was performed and the reaction was allowed to run f for 1 min, 52 for 1 min and 72 for 1 min. A final extension of 72 was then performed.

As the signal was expected to be very low and due to the s ERBD PCR was repeated as described in 5 ml first round product wi 2 ml second round product. The final PCR product was run on a 2% aga 1 x TAE buffer as described in 3.5. The expected PCR pro The bands were excised, purified (3.6), quantitated (3.7) and sequenced

### 3.4.2.4.2

### PCR of ERBD and binding domain

The use of ERBD primer, ERB1196 (5 AATGCGTAGAAGG 3), corresponds to bases 1196 to 1213 on exon 6 of the ERB1417 (5 ACCCAAACCAAAGCATC 3) represents bases 1400 to 1417 in ex antisense strand of the ERB (Figure 18).

5 ng of stirrounded PCR product was amplified in a 50 volume containing 1 mM primer ERB 1196; 1 mM primer ERB 1417R; 5 x PCR buffer (200mM Tris [pH 8.4]; 500mM $KCl_2$); 1 mM MgCl and 200 mM dNTP mix. The reaction was performed in a programmable Cycler (Hybaid, Middlesex, UK). After an initial denaturation at 96 °C for 10 min the temperature was reduced to 51 °C and 1 Unit of Taq DNA polymerase (Invitrogen, UK) added to the mixture. After an extension time of 2 min at 72 °C the reaction run for 30 cycles of 94 °C for 1 min, 51 °C for 1 min and 72 °C for 1 min. A final extension of 72 °C for 5 min was then performed.

Due to the small sample sizes and the low copy number of ERB DNA PCR was repeated as described in sub-cloning 5 ng of the second round PCR product. The expected size of the final PCR product was visualized by running on a 2% agarose gel in 1 x TAE buffer. The bands were excised and purified (3.6) quantitated (3.7) and sequencing (3.8).

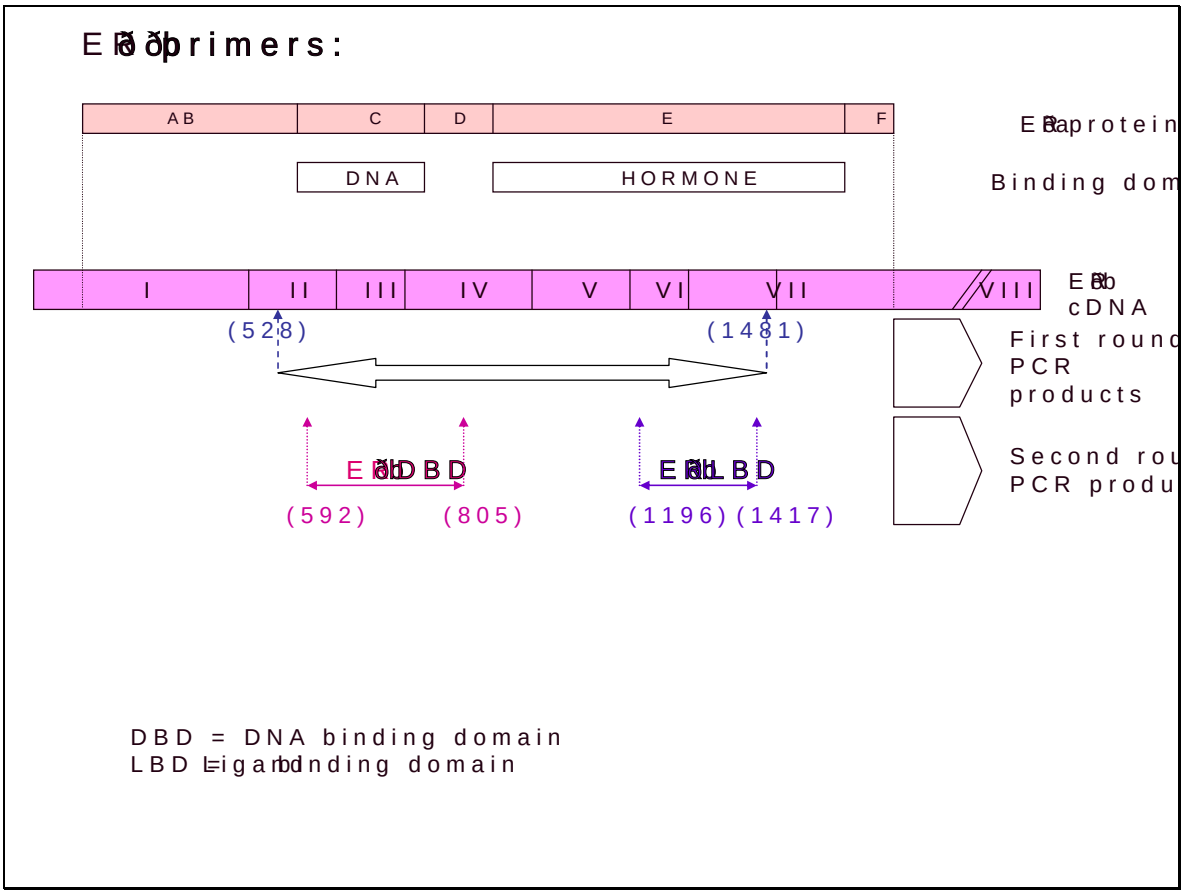


Figure 18. Positions of ERb PCR primers (according to Ogawa 1998a and Enmark 1997).

## 3.5 Agarose gel electrophoresis

Molecular Grade Agarose was obtained from Pronadisa (Madrid bromophenol blue and other chemicals from Merck (Dar unless otherwise stated.

In order to visualize the PCR products, loading buffer (5g sucrose; 5 EDTA; 10g Bromophenol Blue; 1g Ficoll Type 400) was added to each PCR product and PCR products were run on 2% agarose gels in 1 (Appendix II) containing 1µg/ml ethidium bromide (Sigma, Germany) a hours, viewed on a UV transilluminator (Spectroline, New York, USA photographed using a polaroid CU5 Land Camera with a 5 weight markers run simultaneously were either the 100bp m (Promega, Madison, USA) or MWM XIII (Roche, SA).

## 3.6 PCR product purification: Phenol-freeze method

The gel band was cut out of the gel and sliced finely wit agarose slices were placed into an Eppendorf tube and 0 phenol (ICN Biomedicals Inc., Ohio, USA) was added. The all the agarose was in solution (occasionally this also req assist the melting of the agarose). The mixture was frozen ra

in an ethanol-dry ice bath for 2 min and centrifuged at 14000 rp
(Eppendorf, Hamburg, Germany) for 5 min. The freezing a
repeated twice after which and aqueous phase was collecte
fresh Eppendorf tube. An equal volume of chloroform: is
(Sigma Chemical Corporation, St Louis, USA) was added to the
mixed and centrifuged at 14000 rpm for 5 min. The resulta
transferred into a fresh Eppendorf tube and one tenth of t
acetate [pH 5.2] (Appendix I) volumes of 2 absolute ethanol were ad
mixed. This mixture was stored at 2°C overnight to precipitate the cDN
mixture was centrifuged at 14000 rpm in a microfuge for
resulting precipitate was washed in 70% ethanol 15 min. The
pellet was dried and resuspended in 12 ml of water. The cDNA was qua
as described in 3.7 prior to sequencing (3.8).

## 3.7

## Ethidium Bromide Dot Quantitation of cDNA

This method was adapted from Wienand et al. (1997).

DNA standards were prepared by diluting Diagnostics, Randl
South Africa) in sterile water at the following concentration
5 ng/ml, 10 ng/ml, 20 ng/ml, 50 ng/ml and 100 ng/

2 ml of a 10ng/ml solution of ethidium bromide (Sigma, USA) was added to 2
each standard DNA solution and 2 ml of each cDNA sample of unkn

concentrations respectively, mixed well. The standard and
DNA/ethidium bromide solutions were spotted onto plastic
transilluminator and photographed (Figure 19). The unknown c
were estimated by comparison to the fluorescence of the st

## 3.8 Sequencing of PCR products

50 to 100ng of each cDNA sample was added to 3.3pmol/µl primer w
provided by the Division of Human Genetics at the South African
Laboratory Services and the samples were sequenced with a B
Terminator Sequencing Kit (Applied Biosystems, Foster C
programmable DNA Thermal Cycler with a hot start of 96°C for 1
min followed by 25 cycles of 96°C for 10 s, 50°C for 5 s and 60°C for 4 min with a
final holding temperature of 4°C. The sequencing reactions were performe
plate and were subsequently cleaned by ethanol precipita
sequencing precipitates were resuspended in 8µl of loa
deionized formamide to 1 part 25mM EDTA pH 8.0 with 50 mg/ml blue de
The samples were sealed, heated at 92°C for 2 min and placed on ice
electrophoresis on an ABI377 automated sequencer (Ap
Results were provided as spectrographs using GeneScan® Analysis software
(Appendices IV and V)

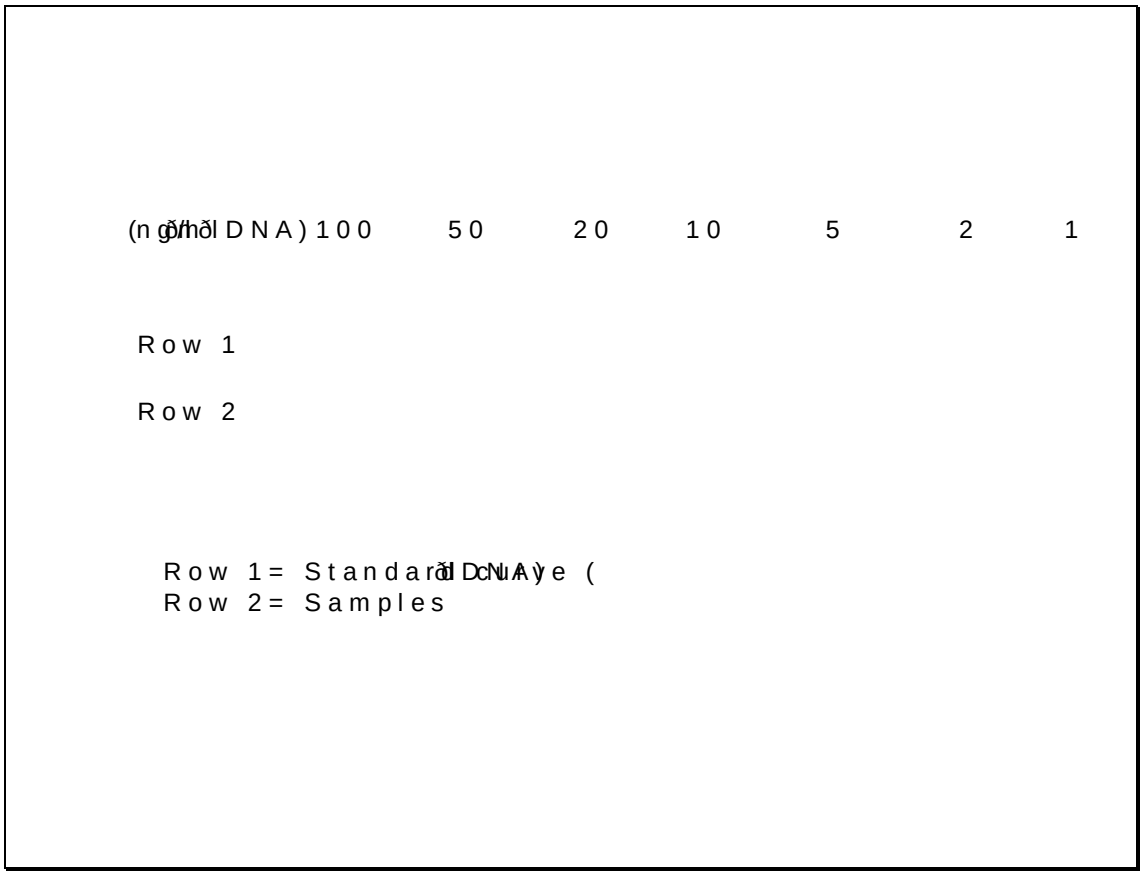


Figure 19. Ethidium Bromide dot quantitation of cleaned PC

The concentration (ng/ to the standard curve (Row 1

3.9

## Cloning of T-47D cell line

T-47D breast duct carcinoma cells were obtained from the Culture Collection (ATCC) and grown in Roswell Park Memori Medium 1640 (RPMI 1640, Gibco BRL, Life Technologies, UK) supplement 2mM-glutamine, 0.2 I.U (10 µg/ml) Humulin N, Eli Lilly, Isando Africa), 1mM Sodium Pyruvate (Gibco BRL), 100 µg/ml penicillin/streptomycin (Gibco BRL) and 10% FCS. All media were phenol red free due to th effects of phenol red, (1988).

Clones of the T-47D line were derived by using a modified li technique. Exponentially growing cultures were harveste diluted, and plated into Nunclon (Kamstrup, Denmark) 96 plat at 1 cell/100 µl/well. Each well was examined under phase contrast and any well not containing 1 cell was excluded. After 3 colonies were harvested and transferred into Nunclon 24 plat and after 12 weeks 13 clones were harvested and were harvested and passaged to proc sufficient cells for cryopreservation of stock vials. Afte passages 5 clones were retained for further study, the re discarded on the basis of poor proliferation rates or contamination.

PCR for EAR and EBR were performed as previously described a response tests were performed on the 5 clones as describe

results of these investigations two clones were selected fo
TCA3 and TCC1.

## 3.10

## Hormone response test

Hormone response tests were performed every 24 hours (up
the parent clones and on each clone, 10 passages later, u
and after exposure to $10^{-12}$ - $10^{-8}$ M 17β-oestradiol, $10^{-8}$ M tamoxifen, $10^{-8}$
aminoglutethimide and $10^{-8}$ M oestenedione, $10^{-8}$ M oestriol and $10^{-8}$ M cholesterol
separately. 17β-oestradiol and 4-hydroxytamoxifen were obtained from S
Chemical Co. (St Louis, MO, USA) and were of tissue culture grade. The solvent in
concentrations of methanol in the cultures were less than 0

Cells were harvested by trypsinization and washed in RPMI
phenol red, FCS and $1 \times 10^4$ cells were seeded into each well of a 96
plate containing 0.1 ml indicator free RPMI 1640 medium and 10%
(SFCS) (Appendix III) for each time frame (ie. 0h, 24h, 48h,
after plating (time 0h) medium was decanted off from each w
indicator free medium containing 10% SFCS was added to each well. Th
control wells/clone/plate received only 0.1% of the ve
wells/clone/plate were supplemented with $10^{-6}$ M 4-hydroxytamoxifen (for 48
hours) after which 3 of these wells were replaced with med
$10^{-8}$ M 17β-oestradiol for a further 48 hours; 6 wells were suppl

17β-oestradiol (for 48 hours) after which 3 of these wells we

supplemented with 10$^{-6}$M 4-hydroxytamoxifen for a further 48 hours.

At each time frame number was determined using the MTT

described in 3.10.1. A standard curve for each clone was r

the MTT assay performed at time 0h.

## 3.10.1 MTT assay

This assay involves the ability of viable cells to convert 3-(4,5-dimethylthiazol-2-yl)-2,5-diphenyl tetrazolium bromide (MTT), a soluble tetrazolium salt, into a purple formazan precipitate (Mosmann, 1983). The resulting purple formazan crystals are dissolved in an organic solvent such as dimethyl sulfoxide and the optical density of the solution may be measured using a spectrophotometer (ELISA plate reader) (Twentyman and Luxton, 1990).

The tetrazolium salt, 3-(4,5-dimethylthiazol-2-yl)-2,5-diphenyl tetrazolium bromide (MTT) and the dimethyl sulfoxide (DMSO) were both obtained from Sigma (Poole, Dorset). Optical density measurements were carried out using a Titertek multiscan reader (ELISA reader) (Flow Laboratories, Rickmansworth, Herts) with a 570nm filter.

Cells were grown in 96-well plates (Nunc, Roskilde, Denmark) in volumes of 200µl of medium per well as described previously in 3.10. The

in PBS (Appendix II) at a concentration of 5 mg/ml and filter
(Millipore, Bedford, MA, USA) was added to each well and incubated at
37°C in a $CO_2$ incubator for 4 hours. The medium was then car
from the wells so as not to disturb the formazan crystals. 2
to each well and the plates were agitated on a plate sha
reading the optical density at 540nm on a Titertek Multi
standard curve was prepared for each cell clone and cell
as a comparison between the sample and standard optical
cases 3 replicates were used to determine each point.

## 3.11 Staining of slides

Cells were grown on slides by plating into Nunc slide flask
relevant medium. The slide flasks were incubated at 37°C in a $CO_2$
cell growth was stopped. The slide flasks were removed from the
media discarded and the slides were gently prised off the
by placing into absolute methanol for 5 min. Slides were
Grunwald's stain (BDH Chemicals, Poole, England) (Appendix III) for
Giemsa stain (diluted 1:10) (BDH Chemicals Ltd) (Appendix
in distilled water twice and mounted using solubilized
Chemicals Ltd). Slides were viewed and photographed using a 40x
2 MOT microscope (Carl Zeiss, Jena, Germany).