

https://dspace.org/

The impact of teachers' pedagogical content knowledge in the teaching of "capacitance" to grade 11 physical sciences learners in Mpumalanga, South Africa.

Nkuna, Bailey Haizane

2013-05-22
http://hdl.handle.net/10539/12729

Downloaded from a DSpace repository. https://dspace.org/

The Impact of teachers' Pedagogical Content Knowledge in the teaching of "Capacitance" to grade11 Physical Sciences learners in Mpumalanga, South Africa.

BAILEY HAIZANE NKUNA

A Research Report.

Submitted to the Faculty of Science, University of the Witwatersrand, Johannesburg, in partial fulfillment of the requirements for the degree of Masters of Science (MSc) in Science Education by coursework and research report.

Supervisor : Dr Samuel Oyoo.

Signature

24th January 2013.

DECLARATION

I declare that this research report is my own unaided work. It is therefore submitted for the degree of MSc in Science Education by coursework and research report at the University of the Witwatersrand, Johannesburg. It has not been submitted before for any degree or examination in any other university, nor has it been prepared with the assistance of any other body or organization outside the University of the Witwatersrand, Johannesburg. All help received with the preparation and/or permission of this thesis has been clearly acknowledged.

Bailey Haizane Nkuna

Signature

24th January 2013

ABSTRACT

There has been poor performance of learners doing Physical Sciences in Mpumalanga in the past 6 years. This was evident on the exam statistics provided by the National department of education. (DoBE, 2012). The statistics show that learners from previously disadvantaged schools obtained an average performance of between 20% and 40% in their end of year results. The topic on “Capacitance” was previously taught to first year university students but has now been included to grade 11 and grade 12 syllabi as a new topic. The teachers’ ability to construct effective lessons on “Capacitance” has been blamed by both circuit managers and subject advisors for Physical Sciences.

This study has investigated the impact of teachers’ Pedagogical Content Knowledge (PCK) in teaching the topic on “Capacitance”. The investigation focused on the teaching strategies that teachers use to help learners address learning problems in Physical Sciences, in the topic on “Capacitance”. The choice of this topic followed an interview conducted with two teachers attached to a teacher development programme. “Capacitance” is one of the new topics in which learners performed poorly.

The research was guided by the following two research questions:

1. How is the teachers’ pedagogical knowledge (PCK) portrayed in teaching Capacitance?
2. To what extent have teachers’ mastered the Content Knowledge about Capacitance?

A case study involving two grade 11 Physical Sciences teachers was utilized to gain the understanding of the teaching strategies. Data was collected through interviews and classroom observations. The data was analyzed by first discussing the two teachers’ depth of PCK during their teaching of the lessons on “Capacitance”. The data analysis also focused on the two teachers’ integration of Content Knowledge (CK) in their teaching. In addition, the data analysis enquired the teachers’ extent of content mastery.

This was achieved by discussing the teachers' Subject Matter Knowledge (SMK) and curricular saliency based on the observed lessons and recorded interviews.

DEDICATION

In memory of my daughter

Thobile Bonnithar Nkuna

1994 – 2011

ACKNOWLEDGEMENTS

Above all, I thank the Almighty Lord for providing me with perseverance and good health throughout my studies.

I would also like to express my deepest gratitude to my supervisor, Dr Samuel Oyoo for his excellent support and the many hours he spent correcting structural errors and editing my work.

I thank Dr Fhatuwani Mundalamo for his guidance during the earlier preparation of this study.

In addition, I thank the principals and participant teachers and learners of the schools where the research study was conducted.

Finally, I thank my family, Constance (wife), Phuthumile (daughter) and Nhlamulo (son) for their consideration and help during the many hours I spent studying late at night and in the early morning.

TABLE OF CONTENTS

CHAPTER 1 : Introduction Page No.

1.1 Introduction. 1
1.2 Background and rationale. 1
1.3 Introduction of Pedagogical Content Knowledge (PCK). 3
1.4 Why was the topic on Capacitance chosen for this research? 5
1.5 Research Problem. 6
1.6 Aim of the Research. 7
1.7 Research questions. 7
1.8 Chapter summary. 7

CHAPTER 2 : Literature Review

2.1 Introduction. 8
2.2 Why is PCK important for this study? 8
2.3 Access of PCK. 11
2.4 Effectiveness of PCK. 12
2.5 Forms of Representations of teachers' PCK. 14
2.5.1 CoRes. 14
2.5.2 Development of CoRes 16
2.5.2.1 Current views about the teaching and learning of science. 19
2.5.2.2 Views of teachers' thinking. 19
2.5.2.3 Teachers' experience of teaching. 20
2.6 Chapter summary. 20

CHAPTER 3 : Methodology and Research Design

3.1 Introduction. 22
3.2 Overall Research Approach. 22

3.2.1 Advantages of Case Studies. 23
3.2.2 Disadvantages of Case Studies. 24
3.3 Methods of data collection. 24
3.3.1 Interviews. 24
3.3.2 Observation. 28
3.4 Research Instrument. 31
3.4.1 Interview Schedule. 31
3.4.2 Observation Schedule. 32
3.5 Research Context and Sampling. 33
3.5.1 The Context. 33
3.5.2 Sampling and details of study participants. 34
3.5.3 Data Collection. 37
3.5.4 Trustworthiness. .
3.6 Actual Study. 39
3.6.1 Accessing the research sites and gaining informed consent of participants. 39
3.6.2 Teachers workshop. 40
3.6.3 Actual data collection. 43
3.6.3.1Implementation of the Interviews. 43
3.6.3.2 Conducting of lessons observations. 44
3.7 Exiting the research site. 45
3.8 Chapter Summary. 46

CHAPTER 4 : Presentation and Data Analysis

4.1 Introduction. 47
4.2 Description of lessons. 47
4.2.1 Mr A's lessons. . 48
4.2.2 Ms K's lessons. 55
4.3 Lessons Observation and notes according to CoRes. 59

4.4 Analysis of Mr A and Ms K lessons. 59
4.5 Comparing Ms K and Mr A lessons. 65
4.6 Subject Matter Representation. 68
4.7 Comparing the teaching of Mr A and Ms K. 72
4.8 Evidence of teachers' mastery of Content Knowledge. 73
4.8.1 The Case of Mr A. 74
4.8.2 The Case of Ms K. 78
4.9 Chapter Summary. 81

CHAPTER 5 : Findings, Conclusions, Recommendations and Reflections.

5.1 Introduction. 82
5.2 The findings. 82
5.2.1 How was the teachers' Pedagogical Content Knowledge portrayed in teaching "Capacitance"? 82
5.2.1.1 The Case of Mr A. 83
5.2.1.2 The Case of Ms K. 85
5.2.2 To what extent have the teachers mastered the Content Knowledge about "Capacitance"? 87
5.2.2.1 The Case of Mr A. 87
5.2.2.2 The Case of Ms K. 88
5.3 Summary of Findings. 89
5.4 Recommendations. 91
5.5 Conclusions 93
5.5 Reflections. 94

6. REFERENCES. 96

7. List of Appendices. 104

Appendix 1 : A letter from the University of Witwatersrand ethics committee. 105

Appendix 2 : Application to Mpumalanga Department of Education. 106

Appendix 3 : A letter from Mpumalanga Department of Education. 115

Appendix 4 : A letter to the principals . 116

Appendix 5 : Consent form from the principal of K Secondary School. 117

Appendix 6 : Consent form from the principal of A Secondary School. 118

Appendix 7 : A letter to the participant teachers. 119

Appendix 8 : Consent form from Mr A. 120

Appendix 9 : Consent form from Ms K. 121

Appendix 10 : Recording consent form for participant teachers. 122

Appendix 11 : Interview consent form for participant teachers. 123

Appendix 12 : Interview consent form from Mr A. 124

Appendix 13 : Interview consent form from Ms K. 125

Appendix 14 : Letter to parents. 126

Appendix 15 : Consent form for learners. 127

Appendix 16 : Consent form for parents. 128

Appendix 17 : Teacher interview schedule. 129

Appendix 18 :	Responses from Mr A.	130
Appendix 19 :	Responses from Ms K.	133
Appendix 20 :	Pace setter from Mpumalanga Department of Education.	135
Appendix 21 :	Learner performance schedule for K Secondary School.	136
Appendix 22 :	Learner performance schedule for A Secondary School.	145
Appendix 23 :	Lesson observation schedule.	147
Appendix 24 :	Transcripts of Mr A's lessons.	148
Appendix 25 :	Transcripts of Ms K's lessons.	160
Appendix 26 :	CoRe for electricity used at the teachers' workshop.	167
Appendix 27 :	CoRes for Mr A.	169
Appendix 28 :	CoRes for Ms K.	180
Appendix 29 :	Worksheet 1.	185
Appendix 30 :	Worksheet 2.	186
Appendix 31 :	Lesson plans for Ms K.	187
Appendix 32 :	Powerpoint presention at the workshop	193
Appendix 33 :	Analogy for teaching Electric Circuits	203

LIST OF FIGURES

Figure 1	Diagram explaining the polarized molecules in a capacitor.	51
Figure 2	Diagram showing the charging of a capacitor taken from Plato Learning simulations.	52
Figure 3	Diagram showing discharging of a capacitor taken from Plato Learning Simulations.	53
Figure 4	Graph showing the rate of discharging of a capacitor.	53
Figure 5	A copy of a diagram of capacitors connected in series and parallel taken from Plato Learning Simulations.	54
Figure 6	A symbol of a capacitor connected in parallel.	55
Figure 7	A diagram showing the charging process of a capacitor taken from Plato Learning Simulations.	58
Figure 8	A diagram showing the discharging of a capacitor taken from Plato learning simulations.	58
Figure 9	Diagrams showing two capacitors of different sizes.	64

LIST OF SYMBOLS.

Symbol 1	Q is a symbol for Charge.	5
Symbol 2	Formula that explains how capacitors connected in series and parallel can be calculated.	54
Symbol 3	Formulae showing calculations of capacitors in series.	55
Symbol 4	A formula for calculating Capacitance.	56
Symbol 5	Farad is a unit for Capacitance.	56
Symbol 6	V stands for potential difference.	56
Symbol 7	nC means nano coulombs.	56
Symbol 8	The mathematical expression $C\alpha A$ explain that Capacitance is directly proportional to Area.	57
Symbol 9	ε_O is a symbol for permeativity constant.	57
Symbol 10	d is a symbol for distance.	57
Symbol 11	A is a symbol for area.	57
Symbol 12	k is a symbol for dielectric constant.	57

ACRONYMS.

PCK	Pedagogical Content Knowledge.
OBE	Outcome Based Education.
DoE	Department of Education.
DoBE	Department of Basis Education.
FET	Further Education and Training.
CoRe	Content Representation.
LED	Light Emitting Diode
BERA	British Education Research Association.
CK	Content Knowledge.
SMK	Subject Matter Knowledge.
AS	Assessment Standard.
LO	Learning Outcome.
RNCS	Revised National Curriculum Statement.

CHAPTER 1

1.1 Introduction

In 1994 when the new democratically elected African National Congress government was constituted, strategies to redress the “legacy of a racially and ethnically fragmented, dysfunctional and unequal education system inherited from apartheid” had to be devised and implemented (Cross, Mungadi & Rouhani 2002, p.171). This resulted in the introduction of Outcomes Based Education (DoE, 1997).

Outcomes Based Education (OBE) encompasses the features of Pedagogical Content Knowledge (PCK). It is characterized by a supple, empowerment oriented approach to learning (DoE, 1997).This was a good opportunity for teachers to be exposed to Pedagogical Content Knowledge because Outcomes Based Education which is still in operation in grades 11and 12 expects teachers to master the subject content and thereby teach according to the expected assessment standards and outcomes (DoE, 2006). Motshekga, current Minister of Education’s statement that “South Africa urgently needs “dedicated, inspired teaching” (2009, p.3) has the message that teachers are key change agents to the realization of improved quality education in South Africa.

The purpose of this research was to examine the impact of Pedagogical Content Knowledge (PCK) intervention on the teaching of “Capacitance”, a topic in the Physical Sciences curriculum in grade 11. This research was conducted with two teachers at two previously disadvantaged secondary schools in Mpumalanga, South Africa.

1.2 Background and rationale

Physical Sciences is one of the subjects that are poorly performed in South Africa. The average pass rate of grade 12 learners who were doing the National Senior Certificate Physical Sciences in Mpumalanga alone was 54%

in 2008, 36% in 2009, 49% in 2010 and only 36% in 2011 when considering learners who achieved from 40% (DoBE 2011). This decline has been explained on the feedback of the 2011 National Senior Certificate results in Mpumalanga (DoBE, 2012), that teachers could not properly consult examination guidelines every time they handle a particular topic. Teachers focused on rote learning or using past examination papers to drill learning concepts before teaching learners to have insight in such concepts. In addition, the decline in results was attributed to insufficient content enrichment through workshops and demonstrations of lessons in poorly performed sections (DoBE, 2012).

Mpumalanga Basic Department of Education have started a teacher development programme by encouraging teachers to upgrade their Content Knowledge through distance learning courses at higher institutions of learning to improve performance in Physical Sciences and Mathematics. Teachers are expected to play a big role despite the fact that most of them work at schools that are not well equipped due to the injustices caused by the apartheid regime.

Most teachers also have inadequate Content Knowledge. Asmal and Hadland (2011) emphasized that apart from lack of culture of teaching in many schools in South Africa, the new democratically elected government had inherited poorly qualified and badly trained teachers. The process of teacher rationalization and redeployment caused uncertainties and instability hence, affected teachers ended up teaching subjects they are not qualified to teach (Asmal & Hadland, 2011).

Asmal and Hadland assertions were confirmed by the experience the researcher had during his work on a programme to develop science teachers in Mpumalanga province of South Africa. The researcher realized that many teachers in Mpumalanga were teaching Physical Sciences as a subject, not because they were all qualified to teach it, but due to the fact that it would secure their jobs. Before 1994, teachers from previously disadvantaged backgrounds had limited opportunities to formally develop their understanding

of Physical Sciences. About 40% of Physical Sciences teachers in South Africa have a degree in many different disciplines other than Physics or Chemistry (Rollnick, Bennett, Rhemtula, Dharsey & Ndlovu , 2008).

This means that some teachers who teach Physical Sciences have degrees that do not have either Chemistry or Physics as their majors (Rollnick et *al*., 2008). For instance, there are Physical Sciences teachers who have BSc degrees but have majored in Botany or Zoology. Some have Biology qualifications but are teaching Natural Science at either intermediate phase (grades 4-6) or senior phase (grades 7-9) (Asmal & Hadland, 2011).

The majority of those considered to be substantive teachers of Physical Sciences to grade 11 and 12 in South Africa also have only one or two years of tertiary study in Physical Sciences (Makgato, 2007). This limited content background has led to teachers' over-reliance on prescribed textbooks rather than allowing them to explore deeply into the nature of the science of the subject. It is therefore not difficult to see why Subject Matter Knowledge (SMK) draws serious attention to any investigation into the nature of PCK in the South African context (Rogan & Aldous, 2005).

As a result, Pedagogical Content Knowledge (PCK) is the best approach to be presented to teachers so they harness the newly acquired knowledge from their distance learning courses to effective teaching and learning in the classroom. If teachers have improved PCK they could design better teaching and learning materials as teaching for understanding takes longer than is allowed for in conventional approaches (Hollon, Roth & Anderson, 1991).

1.3 Introduction of Pedagogical Content Knowledge (PCK)

One of the tasks of the science teacher is to help learners understand the Content Knowledge of science (CK). PCK can be described as "how teachers teach their subject by accessing what they know about the subject, the learners they are teaching, the curriculum with which they are working, and what they believe counts as good teaching in their context " (Rollnick et *al.,* 2008). Shulman (1987), emphasizes that teachers should make use of

Pedagogical Content Knowledge to teach content to learners in a way that promotes understanding. It is in this context that this research sought to establish how much Pedagogical Content Knowledge teachers portrayed when teaching Physical Sciences topic on “Capacitance”. Though the research is focused on teachers, it is only through teaching that one may draw conclusions on effectiveness of Pedagogical Content Knowledge that a teacher portrays.

The research focused on the impact of Pedagogical Content Knowledge through the teaching of the topic “Capacitance” but learners were also the component of the study. van Driel, Verloop and De Vos (1998) explain that effective development of Pedagogical Content Knowledge is embedded in the classroom. This implies that it is in the classroom where a teacher can realize whether little or no Pedagogical Content Knowledge is achieved. The concept of Pedagogical Content Knowledge as conceived by Shulman (1986) embraces the idea that successful teachers have a special understanding of Content Knowledge which they draw in teaching of that content.

While Shulman’s notion of Pedagogical Content Knowledge may seem to resolve the question of what it is that successful teachers know in order to teach in ways that enable learners achieve their understanding, it does not create an easy platform for teachers to easily make claims that Pedagogical Content Knowledge can be achieved without understanding its principles (Loughran, Berry & Mulhall, 2006).

Shulman (1986, p.9) sees Pedagogical Content Knowledge as a “special category of knowledge which goes beyond knowledge of subject matter per se to the dimension of Subject Matter Knowledge”. PCK requires teaching expertise to transform the Content Knowledge to an adaptive level of the learners’ ability to learn based on their background knowledge. The success of teaching depends on the means of communication that the teacher employs in the classroom. Content Representations (CoRes) are one form of language of introducing, demonstrating and explaining the content to be taught to learners (Leinhardt & Smith, 1985).

The result of interpreting Content Representations is that learners should be able to grasp the content. Once learners are able to use their own representation to express and think about the content learned, they are beginning to demonstrate knowledge about the new content taught. Thus, it is important that teachers formulate their representations in such a way that the learners understand the content and grasp the meaning correctly without any major difficulties. For teachers to grasp the concept of content representations better, they should have a better mastery of Content Knowledge to be taught. This explains why the focus in this study was on PCK.

1.4 Why was the topic on Capacitance chosen for this research?

Although this research is not intended to be a Physical Sciences methods textbook, it is a good idea to examine what "Capacitance" is and the issues around Capacitance that teachers find challenging. "Capacitance" is a branch of Physics which explains how electric charges are stored in capacitors. The "Capacitance" of a capacitor, with a voltage (*V)* across it, is a measure of the amount of charge *(Q)* that is stored on the capacitor per volt (Halliday, Resnick & Walker, 1993).

The section on capacitors was previously taught at university level. Currently, the section has been introduced in grades 11 and 12 Physical Sciences subject statement (DoE, 2006). In an interview held with two teachers attending teacher development workshops at organization X[1], they indicated that apart from not having enough resources to teach this section effectively, they find it difficult to teach because it is a new topic they are not familiar with.

The National Curriculum Statement (DoE, 2006) for Physical Sciences expects teachers to introduce the topic on "Capacitance" in grade 11. In grade 12, learners see how capacitors can have a variety of uses in alternating current, such as for filtering out frequencies. They are also introduced to inductors, which can be used to regulate the current in an alternating current

[1] Organization X is the workplace of the researcher. It offers educator support programmes.

circuit. The change of curriculum in 2006 has brought with it reinforced emphasis on the way in which teachers apply their teaching in class.

For instance, there is progression of concepts taught in Further Education and Training (FET) for Physical Sciences, and that means a concept taught at a lower grade (in this case grade 11) should connect with a similar concept in grade 12 (DoE, 2006). Thus, the teaching of these concepts requires teachers to have special knowledge that informs their teaching of particular content. Learners need to be engaged in learning tasks that will help them improve their conceptual understanding of science.

Loughran et *al.,* (2006, p.20) emphasize that, "successful teachers have a special knowledge that informs their teaching of particular content and that special knowledge is encapsulated in Pedagogical Content Knowledge". The teaching of Physical Sciences concepts as prescribed in the new curriculum requires teachers to develop their Pedagogical Content Knowledge. Teachers with developed Pedagogical Content Knowledge should demonstrate that they have a deep foundation of factual knowledge of the subject matter. They should also show that they understand facts and ideas in the context of a conceptual framework and also organize knowledge in ways that allows for retrieval and application by their learners (Loughran et *al*., 2006).

1.5 Research problem.

With the implementation of the new curriculum in South Africa, the approach to the teaching of Physical Sciences and level of teachers' preparation need to change so that there is effective learning in the classrooms. Much educational research has been directed towards the exploration of learners' ideas and difficulties in understanding Physical Sciences concepts and processes (Shulman, 1986) but limited research has been done on the development of teachers' Pedagogical Content Knowledge of learning concepts such as "Capacitance".

1.6 **Aim of Research**

This study focused on the impact of PCK intervention in the teaching of Physical Sciences concepts, specifically “Capacitance”.

1.7 **Research questions**

The research was guided by the following two research questions:

1. How is the teachers’ pedagogical knowledge (PCK) portrayed in teaching “Capacitance”?
2. To what extent have teachers’ mastered the Content Knowledge about “Capacitance”?

These research questions were investigated through the use of classroom observations and interviews of two grade 11 Physical Sciences teachers from two previously disadvantaged secondary schools from Mbombela district in Mpumalanga province. More details of the research process are provided later in this report.

1.8 **Summary**

In this chapter a brief overview of the South African education just after the newly democratically elected government was discussed. The introduction of Pedagogical Content Knowledge was also outlined. In addition, the background rationale based on the context in which the research has been conducted was discussed. The research problem, aim of the research and research questions were stated. The rest of this research report is structured as follows: Chapter 2, focuses on how literature views the implementation of Pedagogical Content Knowledge in teaching Physical Sciences concepts. The theoretical framework is also discussed. Chapter 3 explains the methodology and research design. Chapter 4 focuses on presentation and analysis of data. Finally, in chapter 5, a presented summary of the findings, conclusions, and recommendations are outlined. The reflection of the conduct of the researcher during this study is also included.

CHAPTER 2: LITERATURE REVIEW

2.1 Introduction

This chapter looks at different views of literature on possession of Pedagogical Content Knowledge into teaching. After the reviews the chapter examines the reasons why PCK should be integrated in the teaching and learning environment especially into the science classroom.

2.2 Why is PCK important for this study?

PCK is also explained as “the knowledge that teachers develop over time, and through experience, about how to teach a particular content in particular ways in order to enhance students learning” (Loughran, et *al*., 2006, p. 9). Inadequate training of teachers in Physical Sciences, as indicated by Rollnick, et *al.,* (2008), has led to the poor teaching of this subject. In the South African context. Pedagogical Content Knowledge is a concept that is not very popular with teachers, in particular those from previously disadvantaged communities (Rollnick, et *al*., 2008).

Following Rollnick, et *al.,* (2008), it is evident that most teachers have undergone training sessions which exposed teaching methodology separate from Subject Matter Knowledge. PCK as a new construct focused on creating an opportunity for teachers in this study to marry the two together. Pedagogical Content Knowledge is considered one of the fundamental aspects of teachers’ knowledge.

PCK also enables teachers to develop a deeper understanding of Content Knowledge and the growth of practice (Loughran, et *al.*, 2006). In the past, teacher training institutions relied much on pedagogy rather than looking at both pedagogy and content mastery. This has resulted in poor PCK in teachers , which yielded poor results by learners (Shulman, 1986). According to Loughran, et *al*., (2006), there are three factors that shape the capturing

and representation of Pedagogical Content Knowledge. This research has focused on two factors, teaching and learning in science, as well as teachers' thinking. The teaching of science concepts is influenced by the learners' cognitive frameworks which they have developed as a consequence of their prior experience and by the ideas of the culture in which they live (Driver, Asoko, Leach, Mortimer & Scott, 1994). Then, from this perspective, effective or successful science teaching places the teacher in the role of the mediator of learning as opposed to being the transmitter of knowledge.

There are two critical findings regarding teachers' content and Pedagogical Content Knowledge as explained by Loughran, et *al.,* (2006): First, the teacher's expertise is one of the most important factors in learners' teaching. The thinking of teachers is important so that they see into the complex nature of teaching by uncovering the unsophisticated thinking that informs teachers' actions and decision making in particular teaching situations (Loughran, et *al*., 2006). Therefore, how, when and why teachers think about what they do becomes an important aspect for making clear guidelines while attempting to capture and portray PCK.

Secondly, teachers' knowledge of the subject matter, learners' learning and development, as well as teaching methods, are all important elements of teacher effectiveness (Loughran, et *al*., 2006). Teachers must have a rich and flexible knowledge of content in order to foster learners' conceptual understanding.

In addition, teachers must understand the processes used to establish new knowledge and determine the validity of claims. However, good mastery of subject knowledge does not guarantee that teachers can effectively use this knowledge in their teaching. Thus, Pedagogical Content Knowledge is an essential component of teachers' expertise. This type of teachers' knowledge is distinguished from general pedagogical knowledge because it is intertwined with Content Knowledge (Eylon & Bagno, 2006).

Good teaching is not the implementation of a number of standard steps or protocols that can be passed from one teacher to another in some technical form (Loughran, et *al*., 2006). Pedagogical Content Knowledge is therefore an important aspect of this research because if teachers have a full grasp of it, chances are that they will make explicit the nature of successful pedagogical reasoning and the associated decision making within the teaching of science concepts.

With the explosion of knowledge in the last two decades, more and more scientists are being influenced by the research on different approaches to learning and teaching (Loughran, et *al*., 2006). What should students learn? How could they learn more? These questions are becoming more important in guiding the adoption of education approaches (Loughran, et *al*., 2004). As we know, learning is no longer restricted to school or university, but it continues through one's life.

Old learning and teaching strategies are no longer suitable for learners. What learners should learn is not only the knowledge, but more useful skills such as lifelong learning, problem solving and critical thinking skills, as well as self-directed learning, cooperation and communication skills (DoE, 2006). Thus building a new effective teaching system is an urgent task in the field of education.

The study by Rollnick, et *al.,* (2008) on teachers' Subject Matter Knowledge explains how teachers' poor Pedagogical Content Knowledge could lead to poor teaching and also poor performance in the learning of science. Rollnick, *et al.,* (2008) further report that teachers' lack of understanding of Physical Sciences concepts may lead them in the poor teaching of such concepts as well as designing learning activities that will not connect learners to the meaningful understanding of such concepts.

This explains that Subject Matter Knowledge plays a significant role in helping teachers improve Pedagogical Content Knowledge in their teaching. Subject Matter Knowledge has an influence on teachers in their exploration of the thought processes of teaching of key concepts in science as embraced by

PCK. From the foregoing, it can be accepted that Pedagogical Content Knowledge as explained in section 1.3 does not only focus on the methodology but on both methodology of teaching and the Content Knowledge of the subject. The following section focuses on access to Pedagogical Content Knowledge.

2.3 Access to Pedagogical Content Knowledge

Rollnick, et *al.,* (2008) observed that the Outcomes Based Education curriculum requires an increased access to Pedagogical Content Knowledge by teachers in the educational environment. Poor access to Pedagogical Content Knowledge may create a number of challenges to teachers on their day to day teaching in the classroom. The challenge is in the fact that there are many approaches to Pedagogical Content Knowledge as well as instructional materials available which require that the teachers be competent and comfortable in their use before they are able to incorporate them into their teaching.

One of the challenges is the issue of choice of science instructional materials and integration of Pedagogical Content Knowledge into the teaching and learning process. For an example, Outcomes Based Education which is based on constructivists' theory encourages teachers to recognize prior learning during their teaching in class. Thus, learning activities should guide learners from what they know to the new content to be learned (DoE, 2006). This implies that the choice or design of instructional materials is an important integral component to effective PCK.

The evaluation conducted by the National Department of Education teachers' subject knowledge team stipulates that teacher qualifications in the previous Nationalist Party government were linked to racially defined opportunities from training which ensured that African teachers, taken as a whole were less qualified than the others (Asmal & Hadland 2011). It was important that this research also touched on teaching aspects that will transform teachers from their traditional approach of teaching, to include Pedagogical Content Knowledge. According to van Driel et *al*., (1998), developing approaches to

Pedagogical Content Knowledge can make the structure of scientific phenomena that have been difficult for teachers to understand using traditional models of instruction clearer. This supports the idea that if teachers have access to Pedagogical Content Knowledge they can properly use it to enable learners construct knowledge better.

2.4 Effectiveness of Pedagogical Content Knowledge

Some researchers submit that Pedagogical Content Knowledge does not have significant impact on the achievement of learners in Physical Sciences while others indicate that Pedagogical Content Knowledge is effective in the teaching and learning of science. The debate is on whether Pedagogical Content Knowledge can enable the teacher to teach effectively in the classroom.

Some research findings for example, in curricular saliency and conceptual knowledge report that there is significant impact (Loughran, et *al*.,2004) while other studies show that Pedagogical Content Knowledge does not have much significance in teachers' achievements in science (Gess-Newsome, 1999). Yet this disparity may be due to the assumptions that many research studies make and the degree of reliability and validity of some of the research methods (van Driel et *al*., 1998).

van Driel et *al*., (1998) have also conducted studies to examine the practical connection of Pedagogical Content Knowledge to effective teaching of science concepts. The studies examined the value of attempting to teach the principle of Pedagogical Content Knowledge to prospective teachers. According to van Driel, et *al*., (1998), teachers' development in PCK can at times be difficult because it requires that teachers should be given enough support.

Furthermore, changing to an integrated teaching technique based on Pedagogical Content Knowledge requires more co-ordination between content specialists and pedagogy specialists. These efforts will not easily come hence, extensive work on the part of science teachers is required

(American Association for the Advancement of Science, 1998). The early history of teacher education was primarily focused on the teacher's knowledge of subject matter (Shulman, 1986).

Teacher education research focused mainly on the effectiveness of general pedagogical methods independent of the subject matter content such as the teachers' use of questions, the design of learning activities as well as the assessment of learners' performance (Shulman, 1986). Pedagogical Content Knowledge has revealed that well designed instructional materials during teaching improve learners' achievement (Loughran, et *al.*, 2006).

Where content has been included, it has served primarily as a control variable rather than a topic of specific interest. Recently, there has been a renewed recognition of the importance of both teachers' Pedagogical Content Knowledge and Subject Matter Knowledge to good teaching and learners' understanding (Shulman, 1986).

What distinguishes Pedagogical Content Knowledge from other forms of knowledge is that it makes teachers better teachers rather than subjects experts (Gudumundsdottir, 1987). Teachers differ from educational researchers not necessarily in the quality or quantity of their Subject Matter Knowledge, but in how that knowledge is organized and used (Gudumondsdottir, 1987). For example, an experienced science teacher's knowledge of science is structured from a teaching perspective and is used on the basis for helping learners understand specific concepts (Gudumondsdottir, 1987).

A scientist's knowledge on the other hand is structured from a research perspective and is used on that basis for the construction of new knowledge in the field. What is unique about the teaching process is that it requires teachers to transform their SMK for the purpose of teaching (Shulman, 1986). This transformation occurs as the teacher critically reflects and interprets the subject matter as well as designing classroom activities. In support of what Shulman said about Subject Matter Knowledge, Cochran, King and de Ruiter (1991) explain that it is important to note that a teacher's transformation of

subject matter occurs in the context of two other important components of teacher knowledge which differentiate teachers from subject matter experts. One is a teacher's knowledge of learners, including their abilities and learning strategies as well as their prior knowledge of concepts to be taught. The other, is teachers' understanding of social, political, cultural and physical environments in which learners are asked to learn (Driver et *al*., 1994).

As noted above, Pedagogical Content Knowledge illustrates how the subject matter of a particular subject is transformed for communication with learners. It includes recognition of what makes specific topics difficult to learn, the conceptions learners bring to the learning of these concepts, and teaching strategies tailored to this specific teaching situation.

In the next section, the form of representations that informed this research on teachers' Pedagogical Content Knowledge are discussed.

2.5 Form of representations of teachers' Pedagogical Content Knowledge

2.5.1 CoRes

Content Representations (CoRes) were used in the study to enable the researcher to answer the research questions. According to Loughran, et *al*., (2006), a Content Representation (CoRe) provides an overview of how a teacher approaches the teaching of the whole of a topic and the reason for that approach. A CoRe explains what content is taught in a particular lesson. It also focuses on how and why the content is taught in a particular way. More importantly, a CoRe refers to the teaching of a particular topic to a particular group of learners.

In this research, CoRes for the teaching of the topic on "Capacitance" to a class of grade 11 learners were looked at. CoRes allow insights into the ways that successful teachers think about science content in the context of teaching. Importantly, CoRes provided reasons which supported the reseacher's assertion on the impact of Pedagogical Content Knowledge

(Fenstermacher, 1994). A long term goal is to establish that teachers who have this knowledge do in fact teach in ways that lead to learners' understanding. It is well accepted that much teacher knowledge is implicit, with teachers rarely having the opportunity to reflect on what they do in the classroom and why (Loughran et *al.*, 2004). Further, curriculum and other documents tend to represent the teaching of a topic in a different form as certain content to be learned and understood, and activities that might engage learners.

Teachers' framework for thinking about and discussing with colleagues in the teaching of a topic is often limited to what is practical in the teaching environment. The framing of the CoRes has the potential to help problematize the content and teaching approaches in teachers' minds, and to challenge their thinking about what is important in the teaching of a topic and why.

It may also help teachers to identify what they need to know and what they think about when teaching a new topic (e.g., "What are the big ideas for teaching this topic to this particular group of students?" "What should I expect, and equally, not expect, these students to learn?" "What teaching procedures will help this group of students to understand a particular big idea?" and to become aware of the PCK they already have (Loughran, et *al*., 2004, p.6).

CoRes may also help in some of these ways, as well as making explicit the ongoing reflection and problem solving that is part of teachers' sense of what happens in the classroom. Thus, the purpose of CoRes is to not only represent teachers' topic specific PCK, but also to act as triggers that may help teachers widen their range of attention about practice, leading to a reframing of their experience and a development of their PCK (Loughran, et *al*., 2004).

As Bullough (2001) notes, teachers need help to think more complexly about their practice and the reasons behind their actions in the light of how particular learners learn and in relationship to specific formal academic knowledge. CoRes make explicit this complexity in teachers' thinking and are intended to

promote an awareness of this, and a capacity for this, in teacher's teaching and learning materials.

2.5.2 Development of CoRes

The following is a discussion on how Content Representations are designed.

In this study, the Content Representations (CoRes) were developed by asking each of the two teachers involved in the research to list at the top of each column what they consider to be "big ideas" for teaching "Capacitance" to grade 11 learners. Teachers provided the information under each big idea as they were asked about the different aspects of their knowledge and practice. The CoRe is a generalization of the teacher's responses representing the Pedagogical Content Knowledge because of the reasons it provides which link the how, why and what of the content to be taught (Loughran, et *al*., 2004).

The explanation of teachers' Pedagogical Content Knowledge has been influenced by constructivists perspectives of learning for which the implications are that teaching for understanding entails teachers developing knowledge about and learners that enable them to make curricular decision as well as instructional decisions (Hollon et *al.*, 1991). A CoRe should refer to a particular type of class which in this case was grade 11 Physical Sciences class (Loughran, et *al.*, 2004). The next section outlines the curricular decisions and instructional decisions with respect to information highlighted in each row of the CoRe.

Big Science ideas/concepts

Big Ideas is a term often used in science to describe an idea that has had a profound impact on the way scientists understand and conceptualize the environment around them. Big Ideas mean the science ideas that the teacher sees as being at the heart of understanding the topic for the particular class under consideration (Smith III & Girod, 2003).

What do you intend learners to learn about this idea?

Being specific about what a particular group of learners should be able to learn is an important aspect of a well-developed Pedagogical Content Knowledge.

Why it is important for learners to know this?

In making decisions about what to teach, successful teachers draw on their knowledge of what science content is relevant to learners' everyday lives and how the content links with other areas that learners study. It is important for teachers to show how a particular science idea or topic is to the overall science curriculum (Geddis, et *al*., 1993).

What else you might know about this idea (that you don't intend learners to know yet)?

When selecting what to teach, teachers often make difficult decisions about which content should be omitted (Hollon, et *al*., 1991). Constructivists perspectives of learning recognize that teaching for understanding takes time, which places limits on the range of what can be taught.

Difficulties/limitations connected with teaching this idea

Shulman (1986) considered that, teachers' insights into the potential difficulties when teaching a particular topic to learners' forms part of the important aspect of Pedagogical Content Knowledge.

Knowledge of learners thinking that influences your teaching of this idea.

This part of the CoRe influence teachers' decision making based on their experience of teaching a particular topic. When planning lessons, teachers draw on their knowledge about commonly held ideas about the content to be learned.

Other factors that influence your teaching of this idea

This is the contextual knowledge about learners and general Pedagogical Content Knowledge that influences the teacher's teaching approach.

Teaching procedures (particular reasons for using these to engage with this idea)

According to Leach and Scott (1999), learners change in terms of learning is gradual and involves learners' active engagement with the science ideas under consideration. Teaching procedures cannot guarantee learning. Their purpose from a constructive perspective is to influence learners' thinking in ways that promote better understanding of science ideas.

Specific ways of ascertaining learners understanding or confusion around this idea

Teachers need to constantly monitor the progress of learners' understanding so that they can determine the effectiveness of their teaching of the topic and plan future lessons. While summative assessment is usually explicit, teachers' formative assessment is often unacknowledged and implicit, and probably more specific to the topic being studied (Loughran, et *al*., 2006).

Some parts of the CoRe have more detail than others, in part a consequence of the difficulty of exploring teachers' PCK (Loughran, et *al*., 2006). The form of representation of a CoRe allows additions and changes to be made as further insights from expert, successful teachers are gained.

There are few examples in Physical Sciences of topic specific Pedagogical Content Knowledge in topics such as "Capacitance". The forms of representation of teachers PCK that informed my research stemmed from the understanding that such representations should be consistent with the current views about (1) effective science teaching and learning,(2) complexity of teachers thinking and (3) ways of promoting understanding of teachers experiences of teaching.

2.5.2.1 Current views about the teaching and learning of science

According to Pfundt and Duit (1994), current views about learners learning of Science are centred on learners' alternative conceptions about science ideas. This is linked to views of learning which draw on personal and social constructivists ideas that learners' learning is influenced by their own personal cognitive framework which they have developed as a consequence of their prior experiences and by ideas of the culture in which they live (Driver, et *al*., 1994). The teacher must be knowledgeable about common learners' misconceptions. The teacher should also be able to constantly monitor the learners' understanding of the learning concepts.

In addition, the teacher should be able to introduce learners' experiences at appropriate points which will promote learning. The teacher should act as the cognitive coach who introduces new concepts and provides opportunities that will help learners become proficient users of these concepts (Tobin, Tippins & Gallard, 1994).

The discussion among learners and between the teacher and learners about science ideas and the way these differ from everyday understanding are central to the number of learning activities the teacher executes in the classroom (Driver, et *al.,*1994). As the teaching for understanding takes much longer than is allowed, the breadth of content that can be covered is less than what is expected when teachers use the traditional approach of teaching lessons (Loughran, et *al*., 2004).

2.5.2.2 Views of teacher thinking

According to Clark and Peterson (1986), teaching is a complex activity involving much more than a series of action by the teacher. This implies that the teacher's thinking focusses on the complexity that informs his/her actions and decision making in a particular teaching situation. Whether or not a particular action by a teacher is illustrative of that teacher's Pedagogical Content Knowledge depends on the teacher's reasons for that action. The use

of representations when teaching science lessons can be a possible indicator of providing evidence of the teacher's Pedagogical Content Knowledge. Representations of topic specific Pedagogical Content Knowledge attempt to make explicit a successful teacher's reasoned decision making it the context of teaching a particular science content (Husu, 1995).

2.5.2.3 Teachers' experiences of teaching

Clark and Peterson (1986) emphasize that representation of teachers' practices that are intended to capture and portray the nature of experience increasingly drawn on narrative forms. Narrative forms of teaching have the capacity to open up the teacher's experience to understand the new content being taught. In addition, narrative forms of teaching enable learners to understand why a teacher presents learning content in a particular way.

This research explored on narrative as one mode of representing teachers' Pedagogical Content Knowledge because narrative constructions have the capacity to represent the holistic nature of teachers' knowledge and experience. Through narrative teaching, one can explore the interacting elements of context, teachers and learners' past experience and their future decisions.

The CoRe enables an overview of teachers' PCK for a topic to be made, and provides some insights into the decisions that teachers make when teaching a particular topic including the linkages between the content, the learners and teachers' practice. However, because the information is represented in the form of propositions, it is limited in terms of providing insight into teachers' experiences of practice.

2.6 Summary

In this chapter various literatures reviews of Pedagogical Content Knowledge and their relevance to teaching in the classroom were explored. Ideas to be taken into consideration when employing PCK in the classroom were outlined. From the discussion it became evident that teachers require a unique and

specialized set of knowledge to be able to employ Pedagogical Content Knowledge effectively in the classroom. In line with the current disquieting state of teaching and learning in South African schools and in particular the previously disadvantaged schools (Kriek & Grayson, 2009), this chapter has set the stage for the investigation to source the answers to the research questions as so far mentioned in section 1.7 of chapter 1.

To teach learners according to South African National Curriculum, teachers indeed need to understand the subject matter deeply and flexibly so they can help learners map their own ideas, relate one idea to another, and re-direct their thinking to create powerful learning (DoE, 2006). Teachers also need to see how ideas connect across fields and to everyday life. These are the building blocks of Pedagogical Content Knowledge (Loughran, et *al*., 2006).

Since this research aimed at determining the impact of Pedagogical Content Knowledge in the teaching of the topic on “Capacitance”, more focus was given on the notion of Pedagogical Content Knowledge as a means of thinking about and assessing the knowledge that successful teachers have about how to teach content topics to learners in ways that promote understanding rather than evaluating and exploring PCK per se.

In the next chapter, details pertaining to the particular research methodology are discussed.

Chapter 3: Methodology and Research Design

3.1 Introduction

The research design and methodology employed in this study are discussed and explained in this chapter. The research design provided the scaffold for answering the questions of the study which aimed to determine the impact of Pedagogical Content Knowledge in the teaching of the topic on "Capacitance". The overall research methods, research instruments, sampling, actual study including actual data collection strategy are described.

.3.2 Overall Research approach

There are various design methodologies as outlined in educational research literature (Opie, 2004), with each of them having advantages and disadvantages. These advantages and disadvantages determine what technique to adopt for any research and depending on the questions to be answered (Opie, 2004).

Yin (2003) explains that a research can adopt one of three types of case studies, depending on the purpose: exploratory case studies, explanatory case studies, and descriptive case studies. Exploratory case studies are often used to define the framework of a future study. "In this type of case study, fieldwork and data collection are undertaken prior to the final definition of study questions and hypotheses" (Yin, 2003, p. 6).

Explanatory case studies, on the other hand, seek to define how and or why an experience took place. Their purpose is to suggest "clues to possible cause-and-effect relationships" (Yin, 2003, p.7). Because these studies sometimes suggest causality, they risk the chance of being challenged on the basis that one case does not make for a true experiment. Finally, the descriptive case study is used to develop a document that fully illuminates the intricacies of an experience (Stake, 1995). These are often used to present answers to a series of questions based on theoretical constructs (Yin, 2003).

This study was a descriptive case study. According to Opie (2004, p.74), a descriptive case study may be viewed as an “in-depth study of interactions in a single instance in an enclosed system”. Although case studies are generally regarded by many researchers as difficult to organize and analyze, this case study is based upon a real happening. From this definition, it follows that the researcher may not be able to control some variables as opposed to an experimental study where the researcher has control of the variables involved.

The descriptive case study was chosen for this study for several reasons. First, one of the goals of a case study research was to develop an understanding if there is Pedagogical Content Knowledge in the teaching of Physical Sciences. Secondly, the descriptive case study approach was used in this research because it offered more chance to interact with participants freely by allowing them to operate in an environment that offered them a chance to teach in a way similar to that they would be in even if the research was not conducted. It also afforded the researcher an opportunity to go deeper into the research by gathering enough data to help answer the research questions.

The descriptive case study methodology did fit the needs of this study, which was to determine the impact of, Pedagogical Content Knowledge in the teaching of the topic on “Capacitance”. Stake (1995) states that the “first obligation” (p.4) in case study research is to fully develop and understand the case at hand. Case studies are chosen because the research requires the “close examination of people, topics, issues, or programs” (Hays, 2004, p. 218).

3.2.1 Advantages of case studies

According to (Yin, 1994), there are a number of advantages in using a case study. Firstly, the variations in terms of intrinsic, instrumental and collective approaches of case studies allow for both quantitative and qualitative analysis of data. Secondly, the main benefit of using a case study approach is that the focus is one -on- one or in a few instances allows the researcher to deal with

the intricacies of complex social situations. The analysis is holistic rather than based on isolated factors (Denscombe, 2007). Thirdly, the detailed qualitative accounts often produced in case studies do not only help to explore or describe the data in real life environment, but also help to explain the complexities of real life situations which may not be captured through experimental or real life research (Yin,1994).

3.2.2 Disadvantage of case studies

According to Denscombe (2007), one disadvantage of a case study approach is that it is most vulnerable to criticism in relation to the credibility of the generalization made from its findings. The researcher in a case study needs to be particularly careful to allay suspicions and to demonstrate the extent to which the case is similar to, or contrast with others of its type (Denscombe, 2007). The second disadvantage as Denscombe (2007) explains is that in a case study, it is not easy for a researcher to achieve his/her approach of investigating a situation as it occurs without any effect arising from the researcher's presence.

As case studies tends to involve protracted involvement over a period of time, there is a possibility that the presence of the researcher can lead to the "observer effect" Denscombe (2007, p. 55). The participants of the research might behave differently from normal owing to knowledge that they are "under the microscope" Denscombe (2007, p. 55).

3.3 Methods of Data Collection

3.3.1 Interviews

For this descriptive case study the researcher used interviews and lesson observations as methods of data collection. According to Kvale (1996, p.14), "interviews are ways for participants to get involved and talk about their views". In addition, the interviewees are able to discuss their perception and interpretations with regards to a given situation. The types of interviews

include structured interviews, semi-structured interviews and unstructured interviews.

Structured Interviews

A structured interview is sometimes called a standardized interview, for the reason that the same questions are asked of all participants. Corbetta (2003, p. 269) states that structured interviews are "… interviews in which all participants are asked the same questions with the same wording and in the same sequence." In a structured interview, questions should be read out in the "same tone of voice" so that the respondents would not be influenced by the tone of the interviewer (Gray, 2004, p. 215).

One advantage of structured interviews is that the researcher has control over the topics and the format of the interview. This is because a detailed interview guide is used. According to David and Sutton (2004, p. 160) another advantage of structured interviews is the fact that "prompting can be included with the questions and if a question is inappropriate, data on why no response was made can be recorded." Furthermore, non-verbal cues, such as facial expressions and gestures can be recorded.

On the contrary, the disadvantage of structured interviews is that they adhere too closely to the interview schedule and may be the cause of not probing for relevant information. Also, since there is an interview guide, the respondents may hear and interpret or understand the questions in a different manner. The researcher's verbal comments and non-verbal cues can cause bias and have an influence upon respondents' answers.

Semi-structured Interviews

Semi-structured interviews are non-standardized and are frequently used. The interviewer "does not do the research to test a specific hypothesis" (David & Sutton, 2004, p. 87). The researcher has a list of key themes, issues, and questions to be covered. In this type of interview the order of the questions can be changed depending on the direction of the interview. An interview

schedule is also used, but additional questions can be asked. Corbetta (2003, p.270) recorded that in semi-structured interviews “the order in which the various topics are dealt with and the wording of the questions are left to the interviewer’s discretion”.

Within each topic, “the interviewer is free to conduct the conversation as he/she thinks fit, to ask the questions he/she deems appropriate in the words he/she considers best, to give explanation and ask for clarification if the answer is not clear” Corbetta (2003 , p . 270). Additional questions can be asked and some may be questions that had not been anticipated in the beginning of the interview. This type of interview gives the researcher opportunities to probe for views and opinions of the interviewee. The researcher conducting semi-structured interviews is “freer” than one conducting a structured interview, the interviewer does not have to adhere to a detailed interview guide (Kajornboon, 2004, p. 75).

The advantage of semi-structured interviews is that the researcher can prompt and probe deeper into the given situation. The disadvantage is that inexperienced interviewers may not be able to ask prompt questions. If this is the case, some relevant data may not be gathered.

Unstructured Interviews

According to Kajornboon (2004), unstructured interviews are non-directed and are flexible. They are more casual than the aforementioned interviews. There is no need to follow a detailed interview guide. Each interview is different. Interviewees are encouraged to speak openly, frankly and give as much detail as possible. Usually, the interviewer has received virtually little or no training or coaching about the interview process and has not prepared much. The interviewer asks questions that participants would be able to express their opinions, knowledge and share their experience.

The first disadvantage of unstructured interviews is that the interviewer may not know what to look for or what direction to take the interview. Secondly, the

researcher may not obtain data that is relevant to the question of the study. The interviewer needs to think about what to ask and to ask questions carefully and phrase them properly and know when to probe and prompt (Kajornboon, 2004).

Thirdly, unstructured interviews can be inappropriate for an inexperienced interviewer. The interviewer may be bias and ask inappropriate questions. Also, respondents may talk about irrelevant and inconsequential issues. Consequently, it may be difficult to analyze the data (Kajornboon, 2004).

One advantage of unstructured interviews is that there are no restrictions placed on questions. They are useful when little or no knowledge exists about a topic. So, background data can be collected. The other advantage is that unstructured interviews are flexible and the researcher can investigate underlying motives (Kajornboon, 2004).

Reasons for choosing semi structured interviews.

In this research, semi structured interviews were used because apart from observing the teachers teach the researcher was also interested to hear their personal views on their understanding of this construct called Pedagogical Content Knowledge as well as to get their explanations of their observed classroom practices but in a less structured way.

According to Denscombe (2007), the most common form of semi structured interview is one–to-one variety which involves a meeting between the researcher and the participant. Only two people's diaries need to coincide. The opinions and views expressed throughout the interview stem from one source which is the interviewee. This makes it straightforward for the researcher to locate specific ideas from the interview. Denscombe (2007) emphasized that one-to-one interview is relatively easy to control because the researcher has one person's ideas to grasp and interrogate.

In addition, designing a schedule for one-to-one interview is helpful when the researcher transcribe the interview tape. There is only one person to

recognize and only one person talking at a time. The same open-ended questions outlined in appendix 17 were asked to each participant.

3.3.2 Observation

Lesson observations were also used as a method of data collection. Observation involves looking and listening very closely (Langley & Cubitt, 1987). This study focused on direct observation which is outlined below.

Direct Observation.

Langley and Cubitt (1987) explain direct observation in the following ways: Firstly, a direct observer does not typically try to become a participant in the context of the research, however, the direct observer does strive to be not bias to the observation. Secondly, direct observation suggests a more detached perspective. This means the researcher is watching rather than taking part.

Consequently, technology can be a useful part of direct observation. For instance, one can videotape, audiotape or observe from one-way mirrors. Thirdly, the researcher is observing certain sampled people or situation rather than trying to become immerse in the research. Direct observation requires the researcher to go in search of information, first hand, rather than relying on secondary sources (Langley & Cubitt , 1987).

In addition, Denscombe (2007) explains that direct observation occurs in situations which would have occurred whether or not the research had taken place. The main idea is to observe things as they normally happen, rather than as they happen under artificially created conditions such as laboratory experiments. In direct observation, it is important to minimize the extent to which the presence of the researcher might alter the situation being researched (Denscombe, 2007).

Direct observation requires that the researcher becomes the participant in the culture or context being observed. It often requires months or years of

intensive work because the researcher needs to become accepted as a natural part of the environment in which the research is taking place. If the researcher participates covertly, no one knows about the research except the researcher. The principal concern in this type of observation is to minimize disruption so as to be able to see things as they normally occur and unaffected by any awareness that research is happening (Denscombe, 2007).

In addition, Denscombe (2007) explains that direct observation allows the researcher to place greater emphasis on depth rather the breadth of data. Emphasis is placed on holistic understanding in which the participants being studied are examined in terms of their relationship with the research process. The researcher should not enter the field with pre-established hypothesis to be tested. The longer the researcher is able to spend in observing the event of the research the better because the longer he or she is part of the action the more can be learnt about the situation (Denscombe, 2007).

Advantages of direct observation

One advantage of direct observation as explained by Denscombe (2007,p.221) is that it uses the researcher's "self" as the main instrument of research and therefore requires little by way of technical support. Secondly, participant observation stands a better chance of retaining the naturalness of the setting than other research methods. Thirdly, it provides a good platform for gaining rich insight into what the research wants to achieve (Denscombe, 2007).

Direct observation directly records what the participants of the research do as distinct from what they say they do Denscombe (2007). In addition, Denscombe (2007) indicated that one advantage of direct observation is that it provides a means for collecting substantial amounts of data in relatively short time span. Langley and Cubitt (1987) explain that direct observation provides means for collecting substantial amount of data in a relatively short time. It produces quantitative data which are pre-coded and ready for analysis.

Disadvantages of direct observation.

Its focus on overt behaviour describes what happens, but not why it happens. It does not deal with intentions that motivated the behaviour. It also assumes that overt behaviour can be measured in terms of categories that are fairly straight forward and unproblematic. (Denscombe, 2007, p. 215) asserts that "despite the confidence arising from experience, there remains a question about the observer's ability to fade in the background".

Denscombe (2007) explains that direct observation can pose ethical problems for the researcher because the participants being studied may not be aware of the research or their role in it. There is also a possibility that confidential information might be revealed to the researcher without knowing the interest of the researcher.

Direct observation can be a very demanding method in terms of personal commitment and personal resources (Denscombe, 2007). Furthermore, dependence on "self" of the researcher on the use of field notes as data may lead to lack of verifiable data. Since direct observation relies so crucially on the researcher's "self" as the instrument of the research, it may become exceedingly difficult to repeat a study to check for reliability (Denscombe , 2007, p.221)

In this research direct observation was followed because it connected well with the context in which the research was conducted. The researcher needed to be present in person to record the lessons as well as the interviews. The option of using a tape recorder was considered because when used sensitively, audio recordings do not pose too much of a disturbance (Denscombe, 2007). Audio recordings offer a permanent record and one that is fairly complete in terms of speech or event that occurred.

Justification of using Interviews and observation as methods of data collection

According to Denscombe (2007), interviews offer the researcher the opportunity that understand the participants and the situation in which they operate. Interviews enabled the researcher to gather data based on what the teachers experiences in teaching Physical Sciences concepts to learners. The interviews were also instrumental in gathering data on teachers' perception about teaching and learning.

Good direct observation demands that the researcher devotes time to the field work (Denscombe, 2007). Direct observation was essential for this research because it created an entry to the research site which was essential for the researcher to understand the context of the situation in which the research was conducted and to record notes at the earliest opportunity.

3.4 Research Instruments.

A research instrument refers to the "specific tool or tools the researcher utilizes in order to find a possible answer to the central research question/s" (De Vos , 1998, p.77). The research instruments used in this research to line with the methods of data collection were the interview schedule and observation schedule.

3.4.1 The Interview Schedule

The interview schedule attached as appendix 17, shows the questions that were asked during the interviews of the two teachers who participated in this research. The design of the interview schedule was based on one-to- one interviews. The contents of the interviews schedule were questions to access the two teachers' perceptions of teaching of "Capacitance" as well as their teaching approach of this topic in the classroom.

3.4.2 Observation Schedule.

The observation schedule used in this research is included here as appendix 23. According to Denscombe (2007), the idea of an observation schedule is to minimize, possibly eliminate the variations that arise from data based on individual perception of events and situations.

The schedules used to observe the two teachers identified for this research were to enable the researcher to gather data about the teachers' Pedagogical Content Knowledge during their teaching of the topic on "Capacitance". The observation schedule used in this research comprised of questions on big ideas to be considered when teaching the topic on "Capacitance" based on grade 11 syllabus.

The observation schedule was used each time a lesson was facilitated by the participant teacher identified for the research. The big ideas from CoRes designed by the participants after the workshop held at the beginning of the research were also considered during the lessons observations. According to Denscombe (2007), in designing the observation schedule, the researcher is limited by the pace and accuracy with which it is possible to observe and record the event he/she witnesses.

Denscombe (2007) also explains that an observation schedule should cover the following. Firstly, the content of the observation schedule should entail overt behaviour which is observable in a direct manner. Things like attitudes and thoughts that need to be inferred by the researcher. Secondly, an observation schedule should cover all possibilities. For instance, care needs to be taken to ensure the categories on the observation schedule cover the full range of possibilities and that there are no gaps that will be evident once the schedule is used in the field. The design of the observation schedule for this research is aimed at observing the teaching of the two participants identified for this research. The data gathered through the observation schedule was essential in providing answers to the research questions. The contents of the observation schedule were questions described to respond to the application of big ideas identified by the two participant teachers. The

categories on the observation schedule followed the description made by Loughran, et *al.,* (2006).

3.5 Research Context and Sampling.

In this section, an overview of Mpumalanga as a province down to the context of the schools identified in this research is discussed. Secondly, the type of sampling chosen for this research is explained. Lastly, the background of the two participants together with their learners is discussed.

3.5.1 The Context.

In section 1.2, the researcher explained the overview of the teacher categories in Mpumalanga. The section below outlines the teachers and learners situations in Mpumalanga.

Mpumalanga is one of the provinces in South Africa that has the poorest culture of teaching and learning (Jooste & White, 2011). This culture is more prevalent in previously disadvantaged communities of the province (Jooste & White, 2011). The poor teaching and learning were caused by several factors. Principals feel that after the democratization of 1994, they were left with no powers to manage schools effectively. They encountered challenges that have emanated from the focus on human rights of educators and learners. Several schools in previously disadvantaged communities within Mpumalanga have no libraries and laboratories (Jooste and White, 2011).

This research was carried out in two government schools of Mbombela district of Mpumalanga. The schools are from a previously disadvantaged community and they are in the radius of 10 km from each other, also referred to as K secondary school and A secondary school. According to the discussions held with the principals at their respective schools, all learners come from the nearby informal settlement and were from impoverished backgrounds. They also indicated that most children came from homes where the breadwinners had not gained more than a secondary education. Some learners came from

child headed families and they survived through social grants. The principals names were not included in the references on the basis of anonymity.

In addition, the principals mentioned that they allocated teachers with better academic qualifications in science to teach at grade 11 and 12 classes since schools are generally evaluated by circuit managers[2] based on their performance of grade 12 results. This leaves the lower grades with teachers less skilled to teach science.

3.5.2 Sampling and details of the study participants.

The term "sample" refers to a particular group of the population who then becomes the focus of the investigation, as they are able to provide information relevant to the research questions (De Vos, 1998, p.191).

Sampling thus refers to "the selection of appropriate respondents in their specific ethnographical location" (De Vos 1998, p.191). Researchers can use various sampling methods. These include for example, *case sampling*, where an individual represents the norm; *snowball sampling*, where participants refer the researcher to other possible participants with similar characteristics; *extreme sampling*, where the researcher learns from highly unusual manifestations of participants who represent extreme; *homogenous sampling*, where individuals with only similar experiences are selected; and *purposive criterion sampling*, where small groups of participants who are regarded as knowledgeable and responsive to the issue under investigation, are chosen (De Vos, 1998).

In this study, purposive criterion sampling was used to select research participants. When identifying the schools and participants for this research the researcher considered the following criteria. Firstly, the researcher looked at the schools' grade 12 results for Physical Sciences. The choice of this criterion attributed to the choice of the research topic. "Capacitance" is a topic

[2] Circuit managers are officials hired by the department of education to manage a cluster of schools and their principals (DoE, 2011).

taught in both grade 11 and is also examinable in grade 12. The grade 12 paper is set by external examiners hence, the grade 12 results reflected a wider scope of performance and provided enough data for discussion as opposed to only focusing on results of the exam that is internally assessed by different examiners.

Secondly, focus was given to Physical Sciences teachers who were willing to participate in the research. Thirdly, the teachers' academic qualifications as well as their dedication in teaching Physical Sciences were looked at. Basically, in choosing these schools for this study, a major factor considered was their willingness to allow the researcher access to the Physical Sciences teachers who had expressed willingness to participate in this study.

The two schools identified for this research had no policy of streaming learners according to their abilities. Therefore both groups of mixed sex grade 11 learners (age between 15- 20) were of mixed ability level as evident in the assessment schedules provided by the school attached in appendices 23 and 24**.** Both schools had one class of grade 11 learners doing Physical Sciences.

The two teacher participants, referred to here as Mr A from secondary school A and Ms K from secondary school K had qualifications to teach at a secondary school. Mr A had a BSc degree with both Physics and Botany as majors. He also had four years of experience teaching Physical Sciences whereas Ms K had a B Ed with first year Physics and Biology as a major up to third year. She had five years' experience teaching Life Sciences. She was in her second year of teaching Physical Sciences when the research was conducted.

The school where Mr A taught usually produced results between 40% and 56% passes in grade 12 Physical Sciences whereas Ms K's school produced an average of 40% pass in grade 12 Physical Sciences in the past four years with reference to 2009, the year when the data for this report were collected. When the research was conducted in 2009, Ms K's class of 50 learners had 15 boys and 35 girls. Mr A' class of 40 learners had 24 boys and 16 girls. Not

all learners participated in the study. More information on the exact number of learners who participated in the study is provided in section 4.2. Mr A and Ms K were not selected on the basis of being partners to educator development programme from the outreach programme offered by organization X. Their selection was based on their willingness to participate in the research hence, they appeared to constitute a convenient sample for this research based on their interest to participate. Most of the learners were not properly taught at senior phase level (grades 7 – 9) because the teachers who taught them in those grades had no qualification in Physical Science. According to Jooste and White (2011), teachers and learners from the rural Mbombela area, which is the area where the research was conducted, were exposed to westernized learning materials.

Adding poor teaching to the westernized learning materials made it difficult for learners to understand science concepts as the learning activities from available textbooks were not suitable for the context in which learners were based. They had in addition attended poorly resourced primary schools. These primary schools are located in the same community and are feeders to the secondary schools where the research was conducted. Despite their differences in learner performance more especially at the end of the year, outreach programme X had a mobile laboratory which assisted the teachers in Physical Sciences concepts.

The mobile laboratory started in 2008. It supported several high schools and their feeder primary schools around the community of the schools identified for the research with the aim of closing the gap of lack of laboratories. The lab visited the two schools on weekly basis. Practical experiments and portfolio tasks were done with learners during lesson hours and in the afternoon.

The learners were largely from a SiSwati background and their learning was through English second language. In addition, the learners are from an impoverished background. The involvement of the mobile laboratory equipment played a major role in this study because they acted as an additional resource that the two schools could use to enhance the teachers' classroom practice. In addition to the mobile laboratory was the component of

the outreach programme which aimed at upskilling teachers in Content Knowledge.

3.5.3 Data collection.

Data collection and analysis refers to the “storing, retrieving and documenting of data” (De Vos, 1998, p.335). In qualitative research, data collection takes the form of transcribed interviews, in other words, written narratives. Field notes, in other words, written descriptions and reflections of observations by the researcher can also contribute to the collection process (De Vos, 1998).

The data were collected by means of four lessons observations per participant teacher, two workshops with the teacher participants and one interview with each teacher participant. Only lessons observations and teacher interviews were recorded on a tape recorder. CoRes of the topic on “Capacitance” were collected from the teacher participants as data for discussion during analysis. These recordings were then transcribed verbatim in order to prevent omission of any part of the interviews or lessons observations (De Vos, 1998). The transcriptions presented the actual raw data.

3.5.4 Trustworthiness

In qualitative research, trustworthiness constitutes the most significant criterion by which the quality of a study is assessed (De Vos, 1998). The trustworthiness of the results depends on “the degree to which the researcher provided evidence that the descriptions and analysis do indeed represent the reality of the situations and persons investigated” (Bloomberg & Volpe, 2008, p.77). Data recorded during interviews and lessons observations were used as evidence to show that the research has indeed taken place. Recorded data also played a major role in drawing findings of the research.

In order to ensure trustworthiness, researchers need to attend to aspects of “validity and reliability” (Bloomberg & Volpe, 2008, p.85). Cohen, Manion and Morrison (2007, p.133) therefore advise the researcher to attend to “honesty, depth, richness and scope of data retrieved” in order to ensure validity.

Reliability is ensured when the researcher “pays attention to aspects of accuracy, comprehensiveness and consistency (Cohen, Manion & Morrison, 2007, p.149). Validity was established by checking if lessons were prepared according to the requirements of National Curriculum Statement (DoE, 1997). The prompts of CoRes as discussed in section 2.5.1 were also followed through lesson observation schedule during lessons observations. Reliability was established by checking if teachers correctly followed all Physics principles required when teaching the concepts on “Capacitance.” Guidelines on PCK as explained by Loughran et *al.*, (2006) were also looked at.

The following section outlines the actual study. The flow chart below maps the procedure followed in conducting the actual study.



A chart showing the actual study followed.

3.6 Actual Study.

3.6.1 Accessing the research sites and gaining informed consent of participants.

In research situations it is necessary to get approval from relevant "authorities" (Denscombe , 2007, p.198). This is necessary in any instance of research where the people selected to participate in the interviews are either working within an organization where they are accountable to others higher up the chain of command or potentially vulnerable (Denscombe, 2007). The participant teachers had worked with the researcher in the outreach programme hence, the researcher was not regarded as a complete stranger while accessing the research site.

The researcher applied for ethics clearance and received approval from the School of Education Ethics Committee of the University of Witwatersrand (Protocol: 2009ECE53) as attached in appendix 1. This is a requirement before any research can be carried out by students of the University of the Witwatersrand, Johannesburg. The researcher also applied for a letter of permission from the Head of Department of education in Mpumalanga to do research at the two schools. The letter of approval is attached as appendix 3.

Verma and Mallick (1999, p. 147) emphasized on issues relating to Ethical Guidelines as outlined by the British Education Research Association (BERA, 1992) that the responsibility of participants in any study should be stated in the guiding principle. In accessing entry to the research site, the researcher followed the guideline which suggests that:

> Participants in a research study have the right to be informed about the aims, purposes and likely publication of findings involved in the research and of potential consequences for participants, and to give their informed consent before participating in the research (Verma & Mallick, 1999, p. 147).

A letter requesting to do research at the two schools was given to the principals and the two teachers identified for the research. The principals of the two schools together with the two participating teachers had agreed to participate in the research. The returned consents forms are attached in appendices 5 and 6 for the principals and appendices 8 and 9 for Mr A and Ms K. The names of the principals and the two teacher participants were highlighted in white because they wanted to remain anonymous.

Of the 50 learners in Ms K's class 15 boys and 22 girls submitted their consent forms together with signed consent forms from their parents whereas 16 girls and 16 boys from Mr A's class returned their consent forms together with their parents' signed consent forms. These are the learners who attended the research study right from day one till day four. Only two new learners who did not return their consent letters attended Ms K's class for the duration of the research. The observations were based on the lessons Mr A and Ms K taught after the training at the preparation of CoRes. The interviews were based on the teachers' understanding of the teaching and learning of the topic on "Capacitance".

3.6.2 Teachers workshop.

On the 12th October 2009 a workshop with both participants at Ms K's school was conducted. The workshop started at 2pm in Ms K's classroom and lasted for two hours. The workshop started twenty minutes later after interruptions of noise due to learners that were preparing to go home as it was school out. The workshop began by asking the two participant teachers if they had already covered the topic "Capacitance" as required by the pace setter from the provincial department of education (See Appendix 20). The pace setter is a programme designed by the Mpumalanga department of education. It sets time frames on how much time a teacher should spend in each topic. It also informs the teachers on the order of the topics to be covered from January till the last term of the year (DoE,2012).

Though the topic on "Capacitance" was meant to be taught in the third term of the year, Ms K had only taught part of the topic during the second term of the

year but she did not complete it because there were outstanding topics she had to cover with reference to the pace setter. Mr A had only started the topic at the time of research

As PCK is a new construct in South African teaching, an explanation of what PCK is was outlined as described in section 2.2. An overview of how CoRes are used in PCK was also explained to the two participant teachers. A detailed discussion of how CoRes are prepared is provided in section 2.5.1.

The researcher gave a presentation on how CoRes and PCK could be employed in teaching a topic on electric current through circuits. The presentation aimed to create awareness on what teachers could consider when preparing to teach a particular concept. A topic on electric current was chosen so as to make it easier for teachers to design their CoRes on "Capacitance" since big ideas in "Capacitance" require a teachers' knowledge of electric current.

Firstly, the presentation focused on concepts to consider when dealing with electric current for example charge, current, potential difference, resistance and circuit diagram. Secondly, challenges faced in teaching electric circuits were discussed. The discussion included learners' misconceptions to be considered and the confusion caused by textbooks when explaining concepts. Thirdly, different learning models which lead to learners' misconceptions were also discussed. According to Shaffer and McDermott (1992), there are five models which lead to learners misconceptions. The models are: attenuation, clashing, constant, sequence and unipolar. These models play a huge role in helping the teacher establish the correct teaching model that will help learners clarify misconceptions associated with the learning of concepts in electric circuits. Detailed explanations of what each model entails are explained in full on the presentation attached in appendix 32. Fourthly, an analogy in teaching electric circuits was discussed with the participant teachers. A full explanation of the analogy is attached in appendix 33.

The last activity of the workshop was an exercise on designing CoRes. Since both participants had not heard of CoRes before, a presentation on how CoRes are designed was given to participant teachers as explained by Loughran, et *al*., (2006). The participants teachers were taken through the design of the CoRe on electric current by using the first two ideas of the CoRe attached in appendix 26. The teachers were given an exercise to design a CoRe on electric current. Using the remaining big ideas shown in the CoRe attached in appendix 26, participant teachers were asked to complete each prompt. They were given a chance to discuss between themselves and present their outcome. Both participant teachers struggled in completing some of the prompts but the researcher gave them a clue on how to complete the prompts they struggled with. Towards the end of the workshop, teachers were taken through the whole CoRe attached in appendix 26 as a reflection of how it was supposed to be designed. Day 1 was concluded by asking both participants to design their own CoRes using "Capacitance" as a topic.

On day 2 (13th October 2009), the workshop started at 2pm and it lasted for one hour. The participant teachers were shown how the Plato computer simulations work using the lap tops that were made available to them. The participants were given a chance to fiddle with the software on simulations and to determine whether it would be useful in their teaching of the "Capacitance" for this research. Boxes of electronics components manufactured by Finger Physics were discussed. Each box of equipment contained capacitors of different sizes, Light Emitting Diodes (LED's), cell, connecting wires and light bulbs. The workshop concluded by giving each participant ten laptops and fifteen containers of electronic equipment. Both participants also handed in their CoRes on the topic on "Capacitance". Their CoRes are attached as appendices 27 and 28.

The two workshops aimed at achieving the following: firstly, it aimed at exposing the teachers to the computer simulations as well as the electronic equipment to demonstrate how the capacitor works. Secondly, the use of electronic kit on Capacitors was shown to the participants in order to create an expanded resource base for use during their teaching in this study.

Thirdly, the workshop was conducted this way because the participants were exposed to the construct PCK for the first time. The idea was not to frame them for this research but to expose them to other teaching methods they could employ in class.

3.6.3 Actual data collection

3.6.3.1 Implementation of the Interviews

Each teacher was interviewed separately at their respective school. The interviews were conducted straight after the teachers had completed their consent forms, agreeing to be part of the research. In order to ensure effective and successful direct interviews, De Vos (1998, p.126) advises the interviewer to ask “open-ended questions”. (De Vos , 1998, p.127) further advises researchers to create “a safe and private space where participants will not feel intimidated by outsiders who may listen to their personal responses”. Interviews should take place at times and venues that are convenient for the participants. The interviewer needs to use understandable language, be patient and adaptable but not overly friendly De Vos (1998).

During the interviews conducted in this research, a relaxed atmosphere was created for each of the two participants. This was done by thanking each of the participants for showing willingness to participate. The researcher assured each participant that all ethical requirements were adhered to the researcher’s best ability. For instance, participants were assured that the data collected during the research will not be shared with anyone else except to the researcher’s supervisor and the examiners who strictly adhere to strict ethical rules from the University of Witwatersrand.

Since the interviews were being recorded, only one person could speak at a time meaning that when the researcher asked a question the participant would listen. Same applied to the researcher, when the participant responded the researcher would allow time for responses. The researcher explained the significance of the research and encouraged each participant to speak the truth and share responses and experiences as honestly and openly as

possible. During the interview, the researcher listened attentively, making eye-contact with each teacher participant. The researcher participated by asking questions for clarification.

Interview with Mr A

On the 16th October 2009 Mr A was interviewed at his school. The interview was held at the office of his head of department. It started at 11am and finished at 11:28 am. The interview schedule attached in Appendix 34 was followed. The questions were attached on the letter of consent given to him at the time he was requested to participate in the research.

Interview with Ms K

Ms K was interviewed on Monday, the 19th October 2009, at 9 am, two hours before her first lesson was observed. The interview took place in the staffroom and lasted for 16 minutes. She had already arranged with her colleagues not to interrupt by getting in the staffroom since this was a scheduled interview.

3.6.3.2 Conducting of the Lessons Observations

McMillan & Schumacher (2001, p.208) explain that "the role of the observer is to remain detached from the group process of the research and thus act as a complete observer". The researcher visited each school for four days. The researcher's position was either on the side or at the back of the classroom and did not participate in any of the activities that were taking place each time a lesson was observed. The researcher only moved when he realized that the participating teacher or participating learners were far away from the tape recorder. In addition, the researcher always tried to position the tape recorder such that he would be able to record the data based on the lessons that were conducted.

All learners who agreed to be part of the research were taken through a briefing session on what the research was all about and also why it was conducted at their schools. This was done before the class observation was

conducted. At the end of each observed lesson, the researcher had a discussion with the participant teacher to reflect on the lesson. The lessons reflections took between five to eight minutes. During the observation it was not easy to completely detach the researcher because most of the learners at the two schools attended Saturday lessons for Mathematics and Physical Sciences at organization X, where he worked as a co-ordinator. Though the researcher did not participate in any lesson activity he would move around and bring the tape to a position where it would properly record the lesson activity. The teachers also had been attending teacher workshops which were facilitated by the organization where the researcher worked.

Mr A's lessons

Four lessons for Mr A were observed. All lessons ran for forty minutes each. The first lesson was observed on Friday 16th October 2009 from 1pm till 1:40 pm, the second lesson was observed on Tuesday 20th October 2009 from 2 pm till 2:40 pm, the third lesson was observed on Wednesday 21st October 2009 from 11 am till 11:40 am and the fourth lesson was observed on Thursday 22nd October 2009. Learners were put into groups in all his lessons.

Ms K's lessons

Ms K's lessons were observed from the 19th October 2009 till the 22nd October 2009. Her first lesson was observed on Monday 19th October 2009 from 11am till 11:40 am, the second lesson was observed on Tuesday 20th October 2009 from 10:10 am till 10:50 am, the third lesson was observed on Wednesday 21st October 2009 and the last lesson was observed on the Thursday 22 October 2009. Ms K preferred to teach her learners seated in rows and not in groups.

3.7 Exiting the research site

(Burgess, 1984) recommended that the best strategy for getting out of the research site is agreeing on a deadline for closure for data collection

process. The observations were meant to take ten days at each school but were scaled down to four days due to the following reason: The researcher's presence in each classroom was not completely avoidable. At times learners were tempted to ask for the assistance of the researcher when responding to questions asked by the participant teachers during Mr A's leaners' group discussions and during class discussions in Ms K's case. This could be attributed to the fact that they were familiar with the researcher from the school intervention programme offered by organization X. The closure to the data collection process was done by arranging with the participant teachers for the data to be collected over four days.

Denscombe (2007) explained that fieldwork observation is distinct from laboratory observation because it occurs in situations that would have taken place. The idea of observation is to observe things as they normally happen rather than as they normally happen under artificially created conditions such as laboratory experiments.

The principals, participant teachers and their learners were thanked for participating in the research and were also made aware that the final report will be made available to them at their request.

3.8 Chapter summary

This chapter focused on the methodology and the research design. Firstly, the overall methods of data collection were discussed. The overall research methods explained the choice of the method identified for this research by discussing different types of case studies as well as their advantages and disadvantages. Secondly, the research instruments suitable for this research were also discussed. Thirdly, the research context and sampling of schools and participant teachers were outlined. The chapter concludes by discussing the actual study. In the next chapter, the description of how the collected data through interviews and observation are analyzed and presented.

Chapter 4: Presentation and data analysis

4.1 Introduction

In this chapter research data are analyzed in attempt to obtain the answers to the two research questions. To attempt getting answers to question 1, the first analyses presented are observed participant teachers' lessons based on their teaching approaches. This is followed by comparing the teachers' lessons based on their interactions with learners. The integration of participant teachers' knowledge of the content focusing on subject matter representation, and instructional strategies are then discussed. Also presented are analysis of interviews and other recorded data to obtain answers to the second research question, here the focus has been on curricular saliency and Subject Matter Knowledge, but based on observed lessons and the interviews.

Following, is the presentation of data of the teacher participants observed lessons to be able to answer the first research question as outlined below.

1. **How is the teachers' Pedagogical Content Knowledge (PCK) portrayed in teaching Capacitance?**

In this section, the observed lessons presented by the two participants are analyzed. This was done by discussing teachers' lessons through teacher content representations, simulations and electronic equipment used in their teaching. The analysis is an exploration of the impact of Pedagogical Content Knowledge portrayed by the two participant teachers.

4.2 Description of lessons

The lessons of the two teachers involved in this research study are described next.

4.2.1 Mr A's lessons

As already mentioned in section 3.6.1 Mr A had 32 learners, 16 girls and 16 boys who returned consent forms. Eight learners in his class did not show interest in participating in the research study. Over the data collection period, all thirty two learners were present.

Lesson 1

The lesson started at 1pm and finished at 1:40 pm. Mr A started by arranging learners into groups of five. Five groups were formed but two groups had six learners. He then started the lesson by asking the class to think of five electronic items they commonly use in their daily lives. The excerpt below describes how Mr A interacted with his learners after giving them the opportunity to discuss the question asked in their respective groups.

Mr A	:	Can you say the five electronic equipment or electronic appliances that you use in your daily lives?
Learner 1	:	Radio
Mr A	:	mmh!! Another one!
Learner 2	:	TV
Mr A	:	Good. Another one!
Learner 3	:	Kettle
Mr A	:	What are the components of a TV?
Learner 4	:	Remote.
Learner 5	:	Speakers
Mr A	:	But speakers are not found on the motherboard.
Learner 6	:	Screen
Mr A	:	There are lots of components of a TV. Did you see the mother board? Can you write what you see when you look on the mother board of a computer? I give you seven minutes.
Learner 1	:	Diodes
Learner 7	:	Microchip
Learner 8	:	Capacitor

During group discussions Mr A moved around each group and listened to the discussions. He only moved to the board when he wanted to write down the learners' responses, write definitions or clarify concepts to learners. Learners responded by giving answers such as diodes, resistors, capacitors and transformers. From the responses, he singled out the capacitor and explained that all capacitors have a capacity or space. He also explained that a capacitor stores charge and can also discharge. He concluded the lesson by asking learners to go home and look for a capacitor for the following day's lesson.

Lesson 2

The second lesson was held on the 20th October 2009. The lesson was specially arranged by the teacher to start from 2pm till 2:40pm since there was no period for Physical Sciences that day. Mr A started by mentioning that in the previous lesson they learned about capacitors. He then asked the learners in their respective groups to discuss the definition of a capacitor.

A learner from one of the groups responded by saying "The capacitor is an electric component that can store charge" He asked for responses from the other groups. Another learner from a different group responded by saying "A capacitor is a device that can store electric charge". A learner responding from the third group said "a capacitor stores charge". After realizing that there were no more responses from the groups he wrote the following definition on the board and then explained it before asking learners to copy it in their books. "The capacitor is an electric component that stores electric potential".

Mr A asked learners to discuss the concept "Capacitance" in their respective groups. After a long discussion, he asked the learners to explain the concept "Capacitance". A learner from one of the groups responded by saying "A "Capacitance" is how much an electric component can store charge." None of the other groups responded on this question. He then wrote the following definition of Capacitance on the board.

“Capacitance is the amount of charge stored per unit volt ”

Mr A reminded learners about the homework he gave them the previous day. The homework required learners to bring along a capacitor but none brought a capacitor along. Some learners indicated they could not find electronic devices from which they could detach the capacitors but there was silence from some learners.

He then gave each group a screw driver, container with capacitors and other electronic components. Learners in their respective groups were given the opportunity to cut and open one capacitor found in the container. The teacher moved around to check if each group of learners were doing the activity as instructed.

The outcome of this activity was that learners were able to open the capacitors and identified the plates and dielectric in the form of paper that was found between the plates. He then explained that the distance between the plates, the area and dielectric have effect on the functioning of the capacitor. For instance, he mentioned that the small distance between the plates increases the “Capacitance” whereas the larger the area, the greater the potential difference and the more energy that is stored.in the capacitor.

Mr A further explained that: “Inside the capacitor, there is a dielectric. Inside the dielectric there are molecules which are polarized when the capacitor is connected to the battery. These molecules contain both positive and negative charges” As he was explaining what takes place inside the capacitor, the whole class kept quiet. Mr A then asked if learners understood what he was trying to explain. Most learners responded by shaking their heads, giving an expression of not understanding what was discussed but some were still listening attentively trying to understand what he was explaining.

Mr A responded as follows:

Mr A : Ok, Let us look at it this way. When the plate of a capacitor is positively charged, the particles will be negative in the side of the positive plate and when the plate is negative the particles will be at

the side of the negative plate. The molecules in the capacitor get polarized and then develop an electric field.

He used the following diagram in figure 1, which was reflected through a data projector to explain the polarized molecules in a capacitor. Mr A used the diagram to explain that when a dielectric is inserted between the plates of a parallel plate capacitor, the dielectric becomes polarized so that an electric field is induced in the dielectric that opposes the field between the plates. He continued to say that when the two fields are superposed, the new field between the plates becomes smaller. Thus the voltage between the plates decreases so that “Capacitance” increases.

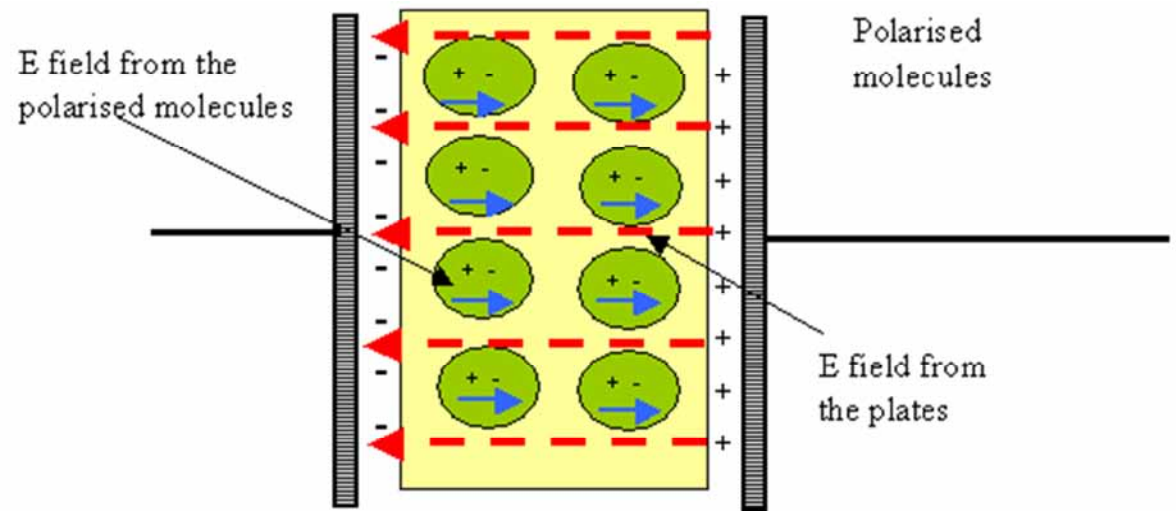

Figure 1

He concluded the lesson by giving the following questions as classwork to assess if the learners understood what he discussed about Capacitance and the relationship between “Capacitance” and the distance between its plates:

1. Explain what is Capacitance?
2. Explain how the area and the distance between the plates affect Capacitance.

Learners continued with group discussions but did not finish the task in class because the period had already finished. Mr A asked learners to write the two questions as homework.

Lesson 3

The third lesson was observed on the 21st October 2009 from 11am till 11:40am. Mr A started the lesson by asking learners to go to their home groups[3]. He then went through a revision of what was covered in the previous lesson. This was done by asking learners to give feedback on the two questions given in the previous lesson. He also asked learners to explain their experience of a cut capacitor including the purpose of electric field and dielectric and the distance between the plates of the capacitor when it charges.

He then introduced the lesson by telling learners that the lesson was about charging, discharging of the capacitor as well its application in everyday situations. Each group was given a laptop with Plato Simulations for "Capacitance". Mr A showed learners how to switch on the laptops to the file that contained the simulations on capacitors.

Learners were given time to observe and discuss what happens when a capacitor charges and when it discharges. He moved around assisting learners who had difficulties in locating the simulation folder. The screen in figure 2 shows the simulated diagrams observed by learners in the charging and discharging of a capacitor.

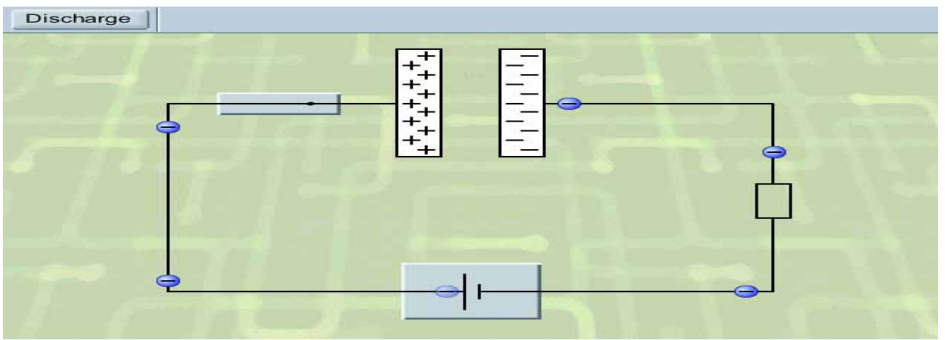

Figure 2 shows a simulation of the charging of a capacitor taken from Plato Learning simulations.

[3] Home groups are the groups of learners allocated by Mr A at the beginning of lesson 1

Mr A used the simulation copied in figure 2 above to effectively explain how charges accumulate at the plates of a capacitor. He also explained by using the simulation copied in figure 3 to explain how the discharging process occurs.

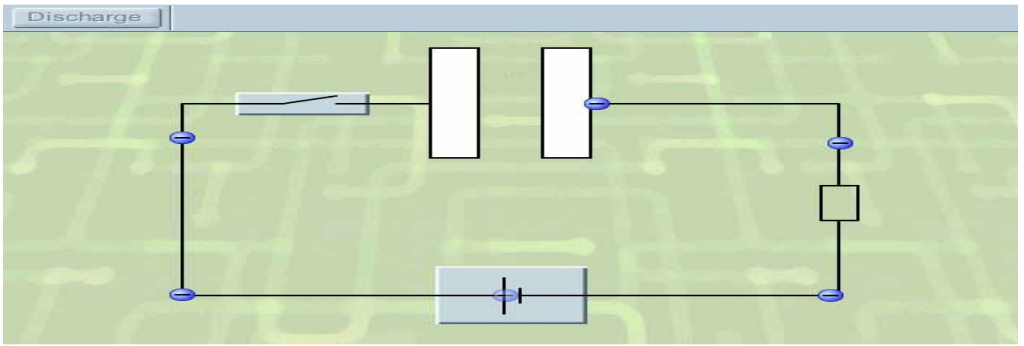

Figure 3. Shows a simulation of the discharging process of a capacitor taken from Plato Learning simulations

He concluded his lesson by explaining how the flashlight of a camera works. Mr A explained that a camera has a capacitor in it. He explained that the flash from the camera occur as a result of the charges that are being released by the capacitor installed in the camera. In explaining the discharging process of a capacitor he mentioned the following:

Mr A : When you take a photo the flash will work for the first time. If you if you click the flash button immediately, it will not work but if you press it again after some seconds it will work ok!

He drew on the board a graph to explain the rate of the discharging process of a capacitor as indicated in figure 4 below.

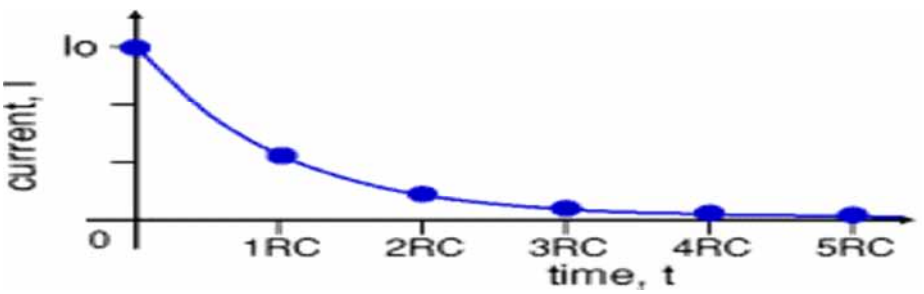

Figure 4. The graph showing the rate of discharging of a capacitor adapted from Plato Learning Simulation

He finally asked the learners to report what they had learned from the lesson.

Lesson 4

The fourth lesson was held on the 22nd October 2009 from 9 am - 9:40 am. Mr A started the lesson by recapping on what he taught in the previous lesson. He recapped through asking questions and listening to learners' responses. He connected a simple experiment of a security alarm to explain the application of capacitors. He went through this by demonstrating how the connections are made and how the alarm works.

He concluded the lesson by explaining the difference between the parallel and series connection of capacitors. His explanation was based on the drawings in figure 5 which he drew on the chalkboard.

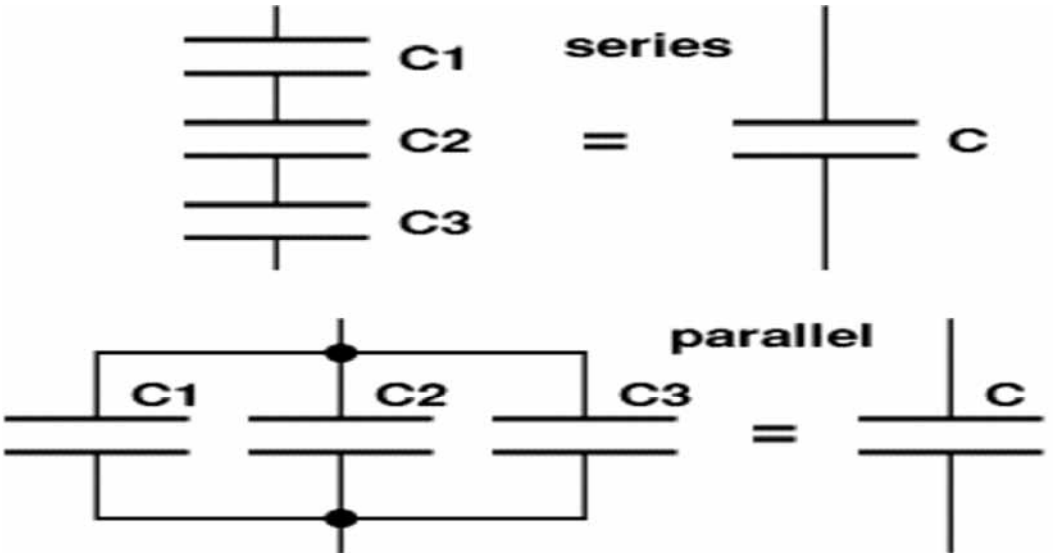

Figure 5 A copy of a diagram of capacitors adapted from the Pluto Learning simulations.

He also explained to learners how to work out the effective "Capacitance" of capacitors connected in parallel and in series using the parallel and series equations. Mr A wrote the two equations on the board.

$$\frac{1}{C} = \frac{1}{C1} + \frac{1}{C2} + \frac{1}{C3}(series) \; and \; C = C1 + C2 + C3 (\text{parallel}).$$

He then explained that a parallel circuit is the most convenient way to increase the total storage of electric charge. Mr A explained the connection of capacitors in series as follows:

Mr A : Capacitors connected in series will have a lower total Capacitance than any single one in the circuit.

$$C_{total} = \frac{1}{\frac{1}{C_1} + \frac{1}{C_2} + \frac{1}{C_3}}$$

If you have only two capacitors in series, this equation can be

$$C = \frac{C_1 C_2}{C_1 + C_2}$$

If you have two identical capacitors in series, this is further simplified to $C_{total} = \frac{1}{2}C$

The teacher mentioned that he will do more examples on how to calculate series and parallel connection later on.

4.2.2 Ms K's lessons

15 boys and 22 girls completed and returned consent forms to participate in the research. Two extra learners participated but did not return their consent forms. The remaining 11 learners did not participate in the study due to absenteeism.

Lesson 1

The lesson was conducted on the 19th October 2009 from 11am till 11:40am. Ms K did not to put her learners into groups. She started the lesson by greeting the learners and then introduced the term capacitors. She explained that a capacitor is a device which stores electric charge and consists of two plates which do not touch. She then drew the symbol in figure 6 on the next page to illustrate her explanation of a capacitor.

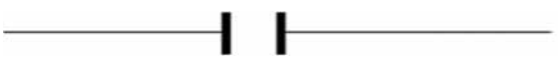

Figure 6. Symbol of capacitor (parallel plate)

She also explained that the capacitor can be used as energy back up. Ms K further explained that the capacitor has an insulator called a dielectric. She added by saying that when the capacitor is fully charged, the gap between its plates is filled with ionized air. She gave few learners the small containers with finger physics electronic materials using random selection. Learners were asked to identify capacitors and were asked to pass these around to learners who did not receive the electronic materials. Learners were warned not to put any capacitor in their mouths. Ms K then explained the concept "Capacitance". She wrote the following definition of "Capacitance" on the board. "Capacitance is a measure of the ability of a capacitor to store charge". This was followed by the explanation of the formula for Capacitance and its derivation.

$$C = \frac{Q}{V} = CV^{-1} = Farad = l\arg er \quad unit$$

She also explained smaller units used in measuring "Capacitance". She wrote them on the board as she explained:

$$microfarad = \mu F = 10^{-6} F;\ nanofarad = 10^{-9} F;\ picofarad = 10^{-12} F$$

She concluded the lesson by handing out a worksheet 1 attached in appendix 29 with questions on "Capacitance" given to the learners. The teacher moved around but did not cover all the rows. She worked out the second question on the board then asked learners to continue working on the other questions. Ms K moved around and assisted few learners who were not able to do some of the questions individually. The lesson ended before all questions were completed in class. She asked learners to complete the remaining questions outlined below as homework.

1.3 Calculate the Capacitance of a capacitor if a 250 V power source connected to the plates respectively charges the plates +2500 nC and -2500 nC.

1.4 Calculate the charge that a 2,5 micro farad capacitor can store if a 12 V battery is connected to it.

Lesson 2

The lesson was conducted on the 20th October 2009 in Ms K's classroom. The lesson was attended by 39 learners and it lasted from 10:10 am till 10:50am. Ms K started the lesson by briefly explaining what she covered in the previous lesson. She introduced the concept "Area" with relation to the "Capacitance". She explained that "Area" is directly proportional to "Capacitance". She then explained the mathematical relation by writing the following on the chalkboard:

$C \alpha A$, where C is "Capacitance" of a capacitor and is measured in farad (F). A represents the area of the plates of a capacitor with unit m^2.

She explained the effect of dielectric in the functioning of a capacitor. She also used the mathematical relation to explain how the distance between the plates of a capacitor affects "Capacitance".

$C \alpha \frac{1}{d}$; $C = \frac{Ak}{d}$; $C = k \frac{A}{d}$ ε_O

Ms K concluded the lesson by giving out worksheet 2 (See Appendix 30) with questions on "Capacitance" as homework.

Lesson 3

Lesson 3 was conducted on the 21 October 2009 from 12:45 pm – 1.30 pm and was also attended by 39 learners. Ms K started the lesson by showing a simulation on how a capacitor charges and discharges when connected to a battery. She demonstrated the simulation using a computer connected to a data projector. She used the inserts of the figure 7 and figure 8 outlined in the next page to explain the charging and discharging of a capacitor.

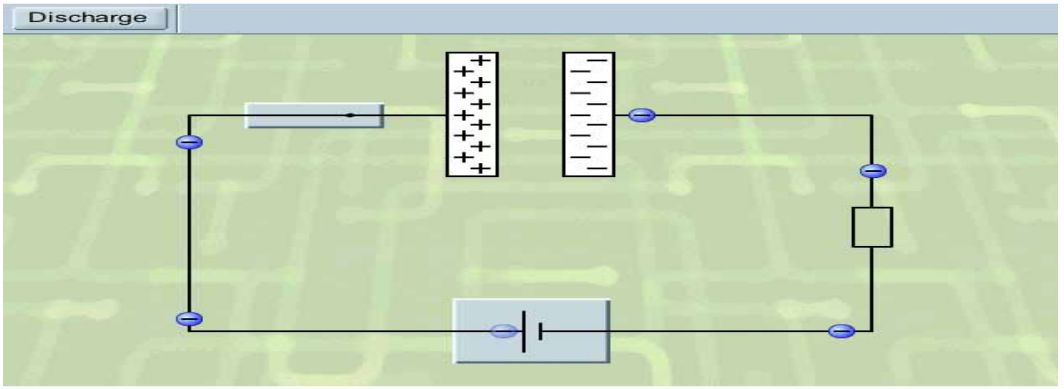

Figure 7 shows the charging of a capacitor taken from Plato Learning simulations.

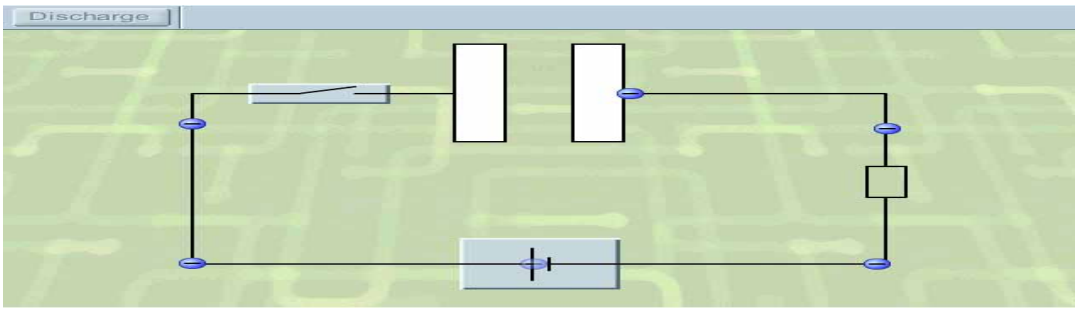

Figure 8 showing the discharging process of a capacitor taken from Plato Learning simulations

She then asked one learner to open a capacitor in front of the class. The contents of the capacitor were explained to the learners. Ms K referred to her previous lesson explaining how the dielectric and the two plates affect the functioning of the Capacitors.

Ms K went through the questions that were given in worksheet 1.

Lesson 4

This lesson was conducted on the 22 October 2009 from 1pm till 1:40pm. Ms K started the lesson by going through questions on worksheet 2 (Appendix 30) with the learners. She worked out some of the questions but also called two learners to show how they worked question 4 on the board.

She also explained the uses of capacitors as follows:

Ms K : Capacitors are used in radios, in computers, etc. So, when there is electricity or high voltage going through the wire, the equipment has certain amount of voltage beyond which you can damage the equipment. What is the role of the capacitor? It can store extra charge which is healthy to the equipment.

The stored extra charge protects the equipment from being damaged. After that the capacitor can safely discharge the absorbed charge. Capacitors are used in keys of a computer.

Ms K concluded the lesson by reading the following question as class work

1. Write any two applications of a capacitor other than the one mentioned in this lesson?

4.3 Lessons Observations notes according to CoRes

Mr A

Appendix 27 shows details of the observation notes taken during the lessons observations of Mr A.

Mr A designed four big ideas in teaching the topic on “Capacitance” (see attached appendix 27).

Ms K

Appendix 28 shows details of the observation notes taken during the lessons observation of Ms K.

4.4 Analysis of Mr A and Ms K lessons

Mr A’s lessons

According to Loughran et *al*., (2004), Pedagogical Content Knowledge has been influenced by constructivits perspective of learning. In all the observed four lessons Mr A resorted to put learners into their home groups. From the questions that he asked in his lessons, he encouraged learners to discuss in their respective home groups before giving answers. For example in his first lesson, Mr A asked his learners the following question.

Mr : Think of 5 electronic devices that you are using in your daily lives. Discuss in your respective groups.

This method is supported by the research recommendations such as those by Piaget (1978) and Vygotsky (1978) which propose that learners should be actively engaged in their knowledge construction and the teacher should only play the role of a facilitator.

The teacher-talk method as opposed to teacher-led class discussion may be used to introduce relatively new concepts to the learners or where the teacher is trying to present a relatively new terrain to the learners. The revised national curriculum statement (RNCS) of South Africa also recommends the use of instructional methods that are learner centered (DoE, 2006).

In his second lesson he gave learners an activity to observe a capacitor and its contents. This was done by getting learners to work in groups. Mr A did not explain concepts without involving the learners. Before he explained a concept, he would first engage learners in group discussions, thereafter he would evaluate the responses before explaining the exact meaning of the concept.

This is also supported by Hatano (1996, p.199) when he states that "knowledge acquisition involves restructuring; that is, not only does the amount of knowledge increase but also one's body is reorganized as more and more pieces of knowledge are acquired."

Mr A did not dwell much on the Plato simulations in lesson 3 because according to him the simulations were connecting to the previous lesson in which learners were given a practical exercise to cut a capacitor and experience what was inside it. Mr A should have given this activity more time because the learners appeared not to be understanding how charges were accumulated at either side of the capacitor plates. In lesson two, the learners were given the opportunity to look at a capacitor, the dielectric and the plates that were inside it. In lesson 3 learners were only shown a charging and discharging capacitor.

Following the second and third lessons, Mr A could have designed learning activities to help learners understand concepts such as "ionized" and "polarized" to afford them the opportunity to conceptualize the way in which a capacitor works. The Plato simulations have exercises attached on them. This information was made available at the workshop conducted before the research was conducted.

There are various ways the teacher could have used this activity. For instance, the use of computer aided experiments or by inquiry methods such as that proposed by McDermott, Shaffer and Constantinou (2000) for teaching electric circuits are useful as an alternative teaching method.

The use of simulations is not the only method of instruction in this topic that could be used to aid learners because simulations themselves cannot aid learners' conceptual understanding if not properly implemented Hartley et al., (2007). Some researchers e.g. (Trey & Khan, 2008 ; Vavougios & Karakasidis, 2008) suggested that the use of visualization tools such as high-technology tools because when these tools were used in their studies they found an improvement in learners conceptual understanding.

Jimoyiannis and Komis (2001) who carried a research into using computer simulations in the teaching and learning of trajectory motion used a framework according to the order of first identifying learners' alternative conceptions in the topic concerned and then applying some teaching interventions to correct or change the conceptions. The result of their study showed that there was improved learning.

As the learners were discussing the items that are found on the motherboard of a computer, Mr A moved around the class to listen to how the learners were responding. The above teaching strategy link well with the perspective that learners' learning is influenced by their own personal cognitive framework which they have developed as a consequence of their prior experiences and by the ideas of the culture in which they live (Driver et *al*., 1994).

From this perspective, the role of the teacher is that of mediator of learning, rather than transmitter of knowledge (Tobin, Tippins, & Gallard, 1994). To be effective, the teacher must be knowledgeable about common learner misconceptions, constantly monitor learners' understanding, design or introduce experiences at appropriate points which will promote learning, act as the cognitive coach who introduces new concepts, and provide opportunities that help learners become proficient users of these concepts.

Following Mr A's teaching approach, he did not fully connect his lessons to address learners' pre conceived ideas on "Capacitance" but appeared to have portrayed general understanding of Pedagogical Content Knowledge.

Ms K's lessons

Ms K's lessons were characterized by the use of teacher- led method to explain concepts as well as solve problems. She seemed not keen to take learners step by step or assess if learners understood the concept "Capacitance" despite the fact that she once introduced the topic to her learners at the beginning of the year. Though she did not follow the "*pace setter*"[4], she explained that she preferred teaching the topic at the beginning of the year but could not complete due to time constraints.

This is perhaps the reason why she did not take a lot of time in introducing the topic although some learners may have forgotten what they learned about capacitors at the beginning of the year. Mr K could have taken this possibility and the category of the learners into account to create expanded learning opportunity to her learners by engaging them in group activities. The attached learner performance schedule (Appendix 21) from K secondary shows that most of the learners were still at level 1 by the end of second term. A level of this category of achievement indicates that a learner has achieved a mark between 0% and 29%.

In lesson 1 Ms K introduced her lesson as follows:

Ms K : Today we will talk about capacitors. You may have seen devices such as radio, computers. What is the use of a capacitor?

Class : All learners were in complete silence.

Ms K : A capacitor is an electron device which store charge.

Scott et al., (1994), indicated that the learning of Science involves socialization into a particular way of looking at the world. I think Ms K should

[4] Pace setter is a schedule designed to indicate time frames of topics to be covered by a grade per year(DoE, 2012).

have taken the first few minutes engaging the learners before writing the definition of capacitor on the chalkboard.

The knowledge of the history and philosophy of science could have enabled learners to understand the historical development of science and how this can aid their understanding of science. Justi and Gilbert (2003, p.1371) have noted that:

> If students understand how scientific knowledge is developed, and how historical, philosophical and technological contexts influence its development, then they will acquire a more comprehensive view of science and as a consequence, become more engaged by the learning of science.

Ms K showed simulations on charging and discharging a capacitor on her third lesson. On the same lesson she gave a learner an activity of cutting the capacitor so that the others could see what was inside. The learners appeared confused through this activity because the simulations were shown before the cut capacitor demonstration.

Learners also showed expressions of not understanding how the capacitor works when the teacher explained the use of the materials inside the capacitor. Teaching informed by constructivists' perspective recognizes that both practical activities and the discussion of activities may be interpreted by learners in ways which differ from those intended. Even when arguments have apparently been clearly developed through classroom discourse, this does not mean that individuals have made sense of them. Teaching must involve a process of regular feedback and checking to identify the reasoning learners are using so that teaching activities can be adjusted accordingly (Scott et al, 1994).

At the end of lesson 1 Ms K gave a worksheet (See appendix 29) to the learners. She worked one question on the chalkboard and thereafter asked learners to do the other questions as homework. She spent less time in giving learners the opportunity to work out problems by themselves. Her approach to teaching Physical Sciences could be attributed to the fact she had limited experience in teaching Physical Sciences. Makgato (2007)

explained that the use of appropriate teaching methods is crucial to facilitate learners' understanding of Physical Sciences. Ms K relied much on the chalkboard during her teaching. Makgato (2007) emphasized that improved understanding of learners in the classroom is evident when various teaching approaches are implemented.

Hatano (1996) indicated that knowledge is acquired by construction and not by transmission alone. Instead of getting two learners to cut the capacitor, an activity she gave in lesson 3, she could have given this activity to learners in their respective groups so they all engage with the activity and thereby start internalizing the new content. During the interview held with Ms K, she indicated that learners should learn information step by step. She could have also circulated the cut capacitors throughout the class so that each learner gets the opportunity to experience an opened capacitor. This could be possibly achieved because resources such as laptops with simulations and the finger physics electronic equipment were made available to both teachers at the workshop.

There is a possibility that Ms K wanted to save on resources in account of opening one capacitor but the challenge was that some learners seemed not to have had enough opportunity to see what exactly was inside the opened capacitor if her intention was to save resources.

In her second lesson Ms K also taught about the area of a capacitor as well as direct and inverse proportion. At the point where she started explaining about the area, she drew diagrams of two capacitors of different magnitudes as outlined in figure 9A and figure 9B below.



Figure 9 A Area = $20m^2$



Figure 9B Area = $12m^2$

Ms K : Let us have a look at the two plates. Look at the area of the plates. The larger area increases "Capacitance". Can you say which capacitor has a larger "Capacitance"?

Learner : Figure 2 has the larger capacitor. When the area is large, then the "Capacitance" is large.

Ms K : Let us focus on the term directly proportional. When we say directly proportional, it is when one side increase and the other decrease. What happens in a capacitor is that when the plates get charged, the charges close the gap between the plates of the capacitor. So, comparing capacitors in figure 9A and 9B, figure 9B has a bigger "Capacitance".

Ms K has engaged her learners in doing learning tasks to some extent. She also used representations and symbols to explain concepts of "Capacitance". A good example of her explanation in using symbols is the one attached in the excerpt above. Though her lessons did not link well to the big ideas outlined in her CoRes, it appears that Ms K has portrayed some general Pedagogical Content Knowledge

4.5 Comparing Mr A and Ms K lessons.

Observed lessons and teacher interaction with learners.

Mr A seemed to know his learners well judging by the way in which he interacted with them. The teacher's knowledge of the learners was considered as one of the domains of teacher knowledge which Shulman (1986) identified. This was demonstrated when he interacted with his learners as follows:

Mr A: ……. so, when you do something you have a good capacity for instance to eat chicken. Is it? Let us look at him (learners name deleted), for example, he has the capacity to play football. According to his ability he has the ability thus we are categorizing him to players. Can you now explain to me what "Capacitance" is?

Learner 16 : A "Capacitance" is a …….

Mr A : Yes man (calling the name of a learner), you can do it man. A "Capacitance" is?

Learner 16 : "Capacitance" is how much an electric component can store.
Mr A : What do the others think? Can you give a response?

Mr A generally demonstrated the knowledge of his learners as well as their prior knowledge and he utilized this knowledge in his lesson. This was reflected when he moved around during the lesson asking specific questions

such as “Can you write things that you know are on the motherboard of a television (TV) or a computer?”

He also attended to learners’ needs as soon as he identified them. When he discovered that learners were not understanding that he was leading them to capacitors when he asked them to mention the components on the motherboard of a TV, he then led them to the motherboard of a computer. It appears that he did not want learners to just have an idea about the capacitor but he also wanted them to be able to identify electronic devices where a capacitor could be found. He has done that by connecting learners to their prior knowledge.

This is well supported by the argument made by (Driver et *al*.,1994) that decisions relating to planning and teaching for conceptual change require the teacher to consider first the nature and status of learners’ existing ideas and understandings. Learners were free with Mr A which was evident in the way he interacted with them whenever they worked in groups. From his lesson (under lessons descriptions in 4.2.1), he always engaged learners in group discussions before giving a final response to the questions asked. The researcher’s observations of his lessons showed that good rapport and interaction existed between Mr A and his learners.

For instance, he engaged all learners in group activities. He also attended to each group during group discussion to see if they understood what they were discussing and also offered support to learners who were struggling with answers. A key role of the teacher is creating an environment in which learners will feel “recognized, accepted and encouraged” (Driver et *al*.,1994, p. 202). Mr A used two teaching approaches in his lessons and they were engaging learners into group activities and using the talk and chalkboard methods to explain and clarify concepts.

Ms K’s lessons were more teacher centered. In her first lesson, she introduced capacitors thereafter she wrote the definition of “capacitor” on the board without engaging learners through an activity. Very little evidence demonstrated Ms K’s Pedagogical Content Knowledge in this activity due to

her less engagement of her learners. Ms K portrayed Pedagogical Content Knowledge when she asked learners to work out problems on the board even though this was done on rare occasions.

At the interview held on the first day before observing her first lesson, she indicated that for effective learning in the classroom, the teacher needs to provide an opportunity for learners to teach their peers through the chalkboard. According to her, she felt engaging learners in group discussion could have jeopardized her chances of completing her lessons.

Both teachers used examples to explain concepts of “Capacitance” such as “ionized”, “polarized” and “charging” and “discharging”. They have also used a camera flash to explain how a capacitor works. In lesson 4 Ms K described the working of a camera as follows:

Ms K When you take a photo you will notice that after sometime the flash of the camera come on your face. Actually the camera flashes because the capacitor in it discharges.

Whereas in lesson 3 Mr A explained the flashing of a camera as follows:

Mr A : When you take a photo the flash will work for the first time. If you you click the flash button immediately, it will not work but if you press it again after some seconds it will work ok!

Ms K used appropriate mathematical equations to explain the relation between “Capacitance” and the area of a capacitor as well as the relation between “Capacitance” and the distance between the plates of the capacitor. She also took her time to explain all the units expected to be known by learners in this topic as this is one of the requirements of learning this section (DoE, 2006).

Both teachers prepared lessons according to the grade 11 pace setter. Teacher knowledge is in different domains. The following section focuses on Content Knowledge and pedagogical knowledge because they represent the core knowledge domains that teachers use in their teaching practices. Pedagogical Content Knowledge (PCK) emphasizes on how teachers

transform the knowledge of the content into a form that learners can understand (Shulman, 1986). In other words, it is the knowledge that the teacher invokes when transforming the subject knowledge into an understandable form for learners.

Shulman (1986) explains that PCK is one of the components that make up the teacher's knowledge and it is the aspect of teacher knowledge that is most relevant in the domains of teacher's knowledge because it represents the knowledge created/used during the transformation of subject knowledge into teachable form.

The components of PCK as outlined by Shulman (1987,p.10) are "subject matter representations which include analogies, illustrations, examples, understanding of students' conception and preconception, and instructional strategies to overcome students' initial conceptions."

4.6 Subject Matter Representation.

Mr A's teaching.

In his second lesson Mr A used representations of electronic equipment to connect learners to capacitors, drawing on learners' prior knowledge. The learners' prior knowledge in this case was their understanding of capacitors. Learners were able to identify a capacitor as one of the components of the motherboard of a computer. Though most learners had no understanding of capacitors at the beginning of the first lesson they knew that there is something called a capacitor and it stores charge. He also used a diagram and electronic equipment to show learners the dielectric and the plates found in a capacitor. In his teaching of charging and discharging of a capacitor, he used simulations to teach learners how the two processes take place. In his last lesson he used a representation in a form of a circuit diagram to show learners how capacitors are used in alarm systems.

The examples Mr A used and the way he engaged learners in group discussions demonstrated that he possessed the Content Knowledge and

some PCK to enable learners understand what he intended teaching them. For instance, he tried to take learners through the functioning of a capacitor in a well co-ordinated way. He started by showing learners a capacitor and the contents found in it when it is opened. He then explained the science behind the operation of components such as dielectric, distance between the plates and the area of the capacitor. He also used an example of a soccer player having a capacity to play football to explain the capacity of a capacitor to store charge. Though this was not an appropriate example, Mr A considered that the learners are from a background where most people follow soccer as a sport. He considered explaining capacity using such an example appropriate.

Harrison and Treagust (2000) noted that analogical models appear in almost every lesson as they are used in explaining some scientific concepts. These analogical models can be presented in different ways such as still pictures of simulated pictures. Although Harrison and Treagust (2000) report that there are problems involved in the use of analogical models in the teaching and learning of school science, he emphasized that analogical models do make learning possible. The use of real science analogy was not evident in his lessons.

The way Mr A introduced his first lesson to the learners indicated an approach that he wanted to take learners based on what they know to the new content on “Capacitance”. The learners in Mr A’s class are from a SiSwati background and Mr A could not communicate with them in their language since he is from a different background and cannot communicate in SiSwati. In his second lesson, Mr A gave learners a capacitor in their respective groups to cut and study its contents. The use of cheese roll as an example is described as follows:

Mr A	:	If you look at the structure that is put inside the capacitor. Can you say what it looks like?
Learner19	:	Cheese roll
Mr A		It is like a cheese roll. The more cheese you have in the roll, the more the energy. The function of the dielectric is to reduce the electric field between the plates so that more

electrons can crowd on to the plates thereby increasing the charge that can be held.

He was able to get all learners to interact with the Plato simulations on charging and discharging a capacitor. Mr A noted that he found the activity useful because learners were able to visualize what was going on in a capacitor when connected in a circuit.

The transcript below is an excerpt from the interview with Mr A where he gave reasons why he found the use of simulations important when teaching "Capacitance".

Mr A	:	Yaa! In this section we use electronic components like capacitor, batteries, LED then circuits and also the main thing we use is computer stimulations. I can group learners around a computer to observe the stimulations. Why we selected this stimulation is because you know, If you take for an example how a capacitor charges and discharges. By looking at the stimulation learners can be able to understand how the charges are running through the circuit and thereby getting the capacitor charged. So, they have got more concrete idea than abstract. They will get a real life experience and they will be able to understand.
Interviewer :		Mr A, I want to get you right. When you mentioned stimulations are you talking about computer simulations. Am I correct?
Mr A		Yaa! the computer stimulations. It is a flash program. Learners can see through the laptop.

Though his teaching was somehow in line with the constructivists' teaching approach, I think the reason he could not take them step by step as planned could be attributed to the context in which learners found themselves in terms of the language of science. "Big ideas" is a term often used in science to describe an idea that has had a profound impact on the ways scientists understand and conceptualize the world (Loughran et *al*., 2004).The lack of linking of big ideas when teaching did not allow a PCK-rich, unified approach to the teaching of the topic on "Capacitance" in Mr A's lessons.

Ms K's teaching.

Ms K used representations in the form of symbols during her explanation of a capacitor. She also used mathematical relations to explain how "Capacitance" is related to the distance between plates and the "Area" of a capacitor. She also used a representation of a simulation to explain the charging and discharging of a capacitor.

She used an example of a camera and a camera flash to explain how capacitors are used in real life. During the interview with Ms K, she mentioned that one of the assessment standards that she follows when teaching "Capacitance" is application of scientific knowledge. The example of a camera flash served to address this assessment standard.

In Ms K's lessons, the learners did not interact with the simulations directly. Learners were shown the simulations through the data projector and the teacher explained to them how the charging and discharging processes of a capacitor took place. This could be attributed to her idea that her learners have to be disciplined to be able to understand concepts better. From the interview session, Ms K said that learners discipline is one of the strategies of promoting effective learning in the classroom. For her to complete a lesson she preferred doing more teaching than teaching engaging learners through learning tasks.

Below is the excerpt taken from the interview to support the explanation above:

Interviewer	:	What are your concerns about teaching the topic on "Capacitance"?
Ms K	:	Learners should get a clear picture of what is going on during learning in the classroom. More especially, learner discipline.
Interviewer	:	Do you have other concerns you have experienced so far?
Ms K	:	There are different types of learners with different learning challenges. Sometimes the lesson take too long and we must finish the topic.

Ms K' use of representations and connecting learning real life activities portrayed some Pedagogical Content Knowledge in her teaching of the topic on "Capacitance".

4.7 Comparing the teaching of Mr A and Ms K.

Mr A followed both teacher and learner centred approaches whereas Ms K relied heavily on the teacher centred approach. Both teachers followed CoRes with one "big idea" assigned to each lessons.

Both participant teachers structured their lessons according to assessment standards required by NCS when teaching the topic on "Capacitance". DoE (2003, p.7), describes an Assessment Standard (AS) as "the way in which learners demonstrate the achievement of Learning Outcomes (LO's)." According to DoE (2003), a Learning Outcome is a statement of intended results in teaching and learning. "It describes knowledge, skills and values that learners should acquire by the end of Further Education and Training level"(DoE,2003, p.7).

Each lesson prepared by Ms K always showed Assessment Standards and learning outcomes whereas Mr A did not emphasize much on Assessment Standards. He relied much on his experience than on lesson notes. The big ideas used in the CoRes were science ideas that both participant teachers thought were being at the heart of helping learners' understanding of the topic. Following the guidelines alluded to in section 2.4 about the effectiveness of PCK, both Mr A and Ms K seem to have portrayed general Pedagogical Content Knowledge.

Both Mr A and Ms K prepared CoRes in which big teaching ideas were outlined. (See appendices 27 and 28). During their teaching they did not appear to be following the big ideas lesson after lesson. For example, the first big idea of Mr A's CoRe indicates that a "capacitor is capable of storing electrical charge , energy and it is an electronic equipment" The first prompt which is outlined below do not feature in his lesson

> Capacitors are to a certain extent like batteries, but differ sharply on how the energy is stored. A capacitor stores energy in an electric field , while a battery stores energy as chemical energy which in turn is converted to electrical energy. (Appendix 27).

The idea of a CoRe is for a teacher "to conceptualize the content of particular subject matter or topic" (Loughran et *al*., 2006, p.21). From this assertion, it is important that the teacher follows the prompts described in a big idea. The outcomes thereafter are essential to make conclusions on the nature of a teacher's PCK.

4.8 Evidence of teachers' mastery of Content Knowledge about "Capacitance."

Both teachers have some classroom teaching experience (refer point 5 in both CoRes). The difficulty appeared to be explaining some concepts. For instance, both teachers did not explain the detailed scientific process involved in a flashing of a camera. According to Orwell (1999), before a camera can use a flash, it has to charge up enough voltage to create light. To do this, the power source sends electricity through special circuitry to increase the voltage the battery puts out. It takes about 1,000 to 4,000 volts or so to create a flash, and a battery emits only 1.5 volts Orwell (1999). The electricity flows through a transformer made up of two coils, the first smaller than the second. An oscillator breaks up the electric flow in short bursts, which allows the first coil in the transformer to magnetize the second. This magnetization increases the voltage of the electricity to about 200 to 300 volts. This electricity is then stored in a capacitor Orwell (1999).

Orwell (1999) further explains that the capacitor is like a battery in its own right, and it stores the new, higher voltage until it is full. When it fills up, an indicator light shows that the flash is charged. When the camera shutter button is pressed, the energy in the capacitor flows through one more transformer, which boosts the voltage in the same way as the first, up to the necessary 1,000 to 4,000 volts. This electricity then moves from the transformer.

Mr A engaged his learners when explaining concepts whereas Ms K relied much on the chalkboard.

In the following section, analyses of data to attempt to answer the second question of the research is presented: **To what extent have teachers mastered the Content Knowledge about "Capacitance"?**.

The teacher interviews are first described, and then the two teachers' Subject Matter Knowledge and their curricular saliency are reviewed with reference to the data from the observed lessons. The description of the interviews aims to provide sufficient data to be able to explain the content mastery portrayed by Mr A and Ms K.

4.8.1 The Case of Mr A.

Description of the Interview with Mr A.

Interviewer	:	Why specifically these assessment standards when teaching the topic on "Capacitance"
Mr A	:	Yaah!! If you look at the topic on "Capacitance" because in conducting an investigation we need to really check what is inside the capacitor because the learners need to know what is inside the capacitor. When you explain that they contain two metal plates and they are put inside the capacitor, the learners become curious. So, they will not have a conflicting idea on how a capacitor looks like and what is inside. To do all these things, conducting an investigation is an important part. Another reason is solving problems i.e. how a "Capacitance" of a capacitor is calculated. Another thing is the communication and scientific arguments. When we are teaching, we are teaching the new technology part. So, how the capacitor is used is important. By communicating and presenting, learners are getting more content and more knowledge about the capacitor

Responding to the question on "what kind of teaching aids do you use in your teaching of this section and why?", he mentioned that in teaching this section there must be electronic components such as capacitors, batteries, Light Emitting Diodes (LED) then circuits. Also, you need computer simulations". He added that learners should be grouped around the computer simulation so that they see for instance, how a capacitor charges

and discharges. Mr A indicated that by looking at the simulations, learners can be able to understand how the charges are running through the circuit and therefore get the capacitor charged. Furthermore, he indicated that by using computer simulations, learners get a real life experience and they are able to understand from abstract to concrete.

Vygotsky (1978) proposed that learners should be actively engaged in their knowledge construction and the teacher should only play the role of a facilitator. In teaching a topic such as “Capacitance”, the teacher should rely on meters to portray his/her content mastery. Alternatively, such a lesson should be teacher centred but learners are likely to miss important information. His response on “how learning activities should be structured when teaching the lesson on “Capacitance” was described as follows:

Interviewer	:	How do you structure learning activities when planning for the lesson on “Capacitance”?
Mr A		When I plan for the lesson on “Capacitance” for instance, the workshop that you took us through about big ideas helped me a lot. First of all I establish the big ideas about capacitors. For example one big idea is that a capacitor is an electronic component. So, I ask the learners what are all electronic electric equipment they know?

Mr A’s concern about teaching a topic such as “Capacitance” was described as follows:

Interviewer	:	What are your concerns in teaching the topic on Capacitance”?
Mr A	:	The main concern when teaching the topic on “Capacitance” is the abstractness. Learners are dealing with something they cannot see and how it operates in reality. The problem is in our school we do not have an electronic laboratory. So, if we have a laboratory it would be easy for us because learners have to see what a capacitor is, how it works and where it fits in real life. To inculcate these ideas is very difficult unless or otherwise we have a laboratory with computers. We need simulations with overhead projector to show all learners. Learners should experiment or investigate by themselves to be able to get a good idea about these things.

According to Shulman (1986), teachers should try new ways of exploring how learners are thinking about the concepts being taught. They should ask learners about how and what they understand. Ask learners what "real life"

personal situations they think science relates to. Teachers then try to get inside the learners' heads and see the ideas from their point of view Shulman (1986). What is revealed on the teacher's content mastery is that Mr A was able to engage learners in explaining concepts such as "Capacitance", charge and dielectric.

Subject Matter Knowledge of Mr A.

In prompt 3 of the CoRe attached in appendix 27 Mr A indicated that:

Mr A : Capacitors don't really store charge at all. They allow negative charge to be transferred from one plate to the other, thus establishing an electric field between their plates but there is no net increase in the amount of charge on the capacitor's plates. After charging, the charge is exactly the same as it was before charging. The charge just moved around. What capacitors store is energy, not charge.

According to Giancoli (1991), the net effect of charging a capacitor is to remove charge from one plate and add it to another plate. When some charge is on each plate, it requires work to add more charge of the same sign. "initially, when the capacitor is uncharged, it requires no work to move the first bit of charge over"(Giancoli,1991,p.451). When going through the prompts of the first big idea in Mr A's CoRe it seems Mr A has adequate Subject Matter Knowledge on "Capacitance". However, he did not go into deeper details during his lessons as he outlined in the CoRe. From the description above it seems Mr A has developed understanding of the concept on "Capacitance" and that his understanding has influenced the way he teaches.

In addition, In lesson 2 Mr A gave the definition of capacitor as "an electric component that stores electric potential" This definition came after learners were taken through an exercise of discussing a capacitor connecting to their prior knowledge. Giancoli (1991, p.451) explains that "by the end of the charging process, however, the work needed to add a charge Δq will be much greater because the voltage across the capacitor, which is proportional to the charge on the plates ($V=Q/C$) is now large."

Mr A's failure to include the mathematical equations to explain relation of concepts was a concern. Though he mentioned during lesson reflection that he planned to explain the mathematical equations in more details when he give the learners learning tasks, they are an important component of the grade 11 syllabus which learners need to understand before they solve problems involving mathematical manipulations (DoE, 2003). Hewson, Beeth and Thorley (1998, p.203) explain that "in teaching for conceptual change, it is necessary that the range of ideas related to the topic held by different people in the class be made explicit."

Curricular Saliency of Mr A.

Curricular saliency entails how important a particular science idea or topic is to the overall science curriculum (Loughran et *al*., 2006). In making decisions about what to teach, successful teachers draw on their knowledge of what science content is relevant to learners' everyday lives and how the content links with other areas that learners study. Mr A seemed to have paid particular attention in helping learners develop understanding of the concepts in "Capacitance", though this was a difficult task for him because of the background of the learners.

For instance, learners were not able to provide a capacitor after he asked them to bring along one indicated that he should bear in mind that knowledge is situated so, being "part of the product of the activity, context, and culture in which it is developed and used" is key (Brown, Collins & Duguid,1989, p.32). Since the learners come from an impoverished background, it could be possible that they could not find any electronic devices to detach the capacitors from or they did not have money to buy capacitors. It could also be possible that learners just did not want to bring along a capacitor.

4.8.2 The Case of Ms K.

Description of the Interview with Ms K.

Ms K indicated that the assessment standards that she used when teaching the topic on “Capacitance” were conducting an investigation; gather data to draw conclusions; recalling and discussing scientific concepts and conducting of scientific formula and application of Scientific knowledge. These assessment standards are expected to be achieved by teachers when teaching all topics prescribed in grades assigned to the Further Education and Training band (FET) which includes grades 10,11 and 12 (DoE, 2003).

When probed on whether she found the assessment standards helpful in her teaching, she responded by saying “yes, I give worksheets based on assessment standards and learning outcome”.In answering the question on “what kind of teaching aids do you use in your teaching of this section” she responded as follows:

Ms K	:	Ok. I use a data projector, capacitor for learners to see what is inside the capacitor, a Light Emitting Diode (LED), battery, connecting wires, chalkboard, data sheet for dielectric and worksheet.

Ms K indicated that she structured learning activities step by step. According to Ms K, capacitors should be made available to learners as an introduction to the lesson on “Capacitance”. She further indicated that factors affecting the capacitor, the formula regarding capacitors and also application of capacitors should come as a second activity.

Ms K’s responses on the remaining questions were as follows:

Interviewer	:	Do the activities link with one another from lesson to lesson or you come with linking activities for one lesson not taking care of the next lesson?
Ms K	:	Eh! Actually I think all lessons should be linked
Interviewer	:	Ok. Do you have other concerns that you have experienced in teaching “Capacitance” so far?

Ms K	:	There are different types of learners with different learning challenges. At times the lessons take too long and we must finish the topic
Interviewer	:	How do you think the teaching of the topic of “Capacitance” should be improved in the classroom?
Ms K	:	Ok. Learners should have the freedom to express themselves. The teacher should support them by asking question and also help them to answer such questions. Learners should be allowed to use the chalkboard to write problems and work them step by step. The teacher must be a facilitator to make teaching and learning great
Interviewer	:	Can you comment on the teaching materials. Are they not a problem?
Ms K	:	No. I now have enough materials for experiments

From this interview, Ms K has expressed a better understanding of mediation, one of the teaching styles prescribed in the Outcomes Based Curriculum (DoE,1997). According to DoE (1997), one of the roles that a teacher has to play in order to be deemed competent is the role of mediator. This means that the teacher should become a medium by means of which learners access, process or construct knowledge. In the process of mediation both teacher and learner have to match their actions to the task at hand. Sometimes the teacher will provide information and the learner will ask questions. At other times the teacher will ask questions and the learner will provide information.

From her responses the researcher gathered that she understands that her learners have different learning challenges. Teaching learners who have different styles requires a teacher to integrate different teaching style such as thinking skills, co-operative teaching, critical thinking and facilitation skills. (DoE,1997). Hatano (1996) also emphasized that knowledge can be transmitted to some extent, but transmitted knowledge becomes usable in variety of problem-solving situations only after it has been reconstructed i.e. “interpreted, enriched, and connected to prior knowledge of the learner” (Hatano, 1996, p.199).

Subject Matter Knowledge of Ms K.

Her emphasis in getting learners to know definitions of Capacitor and "Capacitance" as well as being able to do calculations were well covered in the second big idea of her CoRe (Appendix 28). Ms K's engagement with learners' mathematical calculation was extensive in her teaching. This was appropriate but emphasis could be to engage more in helping learners understand the concepts. Loughran et al., (2006, p.20) emphasize that "as oppose to telling, it is crucial that teachers create meaningful and engaging activities between the teacher and the students". Ms K showed understanding of explaining what happens to the dielectric of a charged capacitor.

She also explained that the capacitor can be used as energy back up. Ms K further explained that the capacitor has an insulator called a dielectric. Using the dielectric and dielectric constant, she explained the mathematical relation which led to the formula $C = k \frac{A}{d}$ $\varepsilon_{O.}$

According to Giancoli (1991), a dielectric allows the plates of the capacitor to be closer together without touching, thus allowing an increase in "Capacitance". Although the electrons in a charged capacitor do not leave the molecules, they will move slightly within the molecules to the positive plate.

The detail of the above explanation indicates that although MsK did not portray much of her understanding in clarifying concepts on "Capacitance", she has some depth of the Subject Matter Knowledge to some degree. In addition, her explanation of everyday use of capacitors portrayed her understanding of the content of the topic.

Curricular Saliency of Ms K.

Ms K mentioned that addressing learners' learning different challenges through linking activities could help learners understand learning concepts

better. Her idea of explaining concepts and integration of assessment standards as required by the national curriculum were outlined in her teaching approach, thus one would assume she had knowledge of it.

4.9 Summary.

In this chapter the researcher described the data collected during the research and presented an analysis of the data. After analyzing the observed lessons and interviews with the two teachers, the two research questions were answered by discussing the depth of their Pedagogical Content Knowledge and the extent of content mastery in teaching the topic on "Capacitance". Their depth of Pedagogical Content Knowledge was analyzed by first discussing their interaction with their learners and by comparing the two teachers' lessons. From the analysis of the data indicated in this chapter, there are no wide variations with regard to how the two teachers portrayed their Pedagogical Content Knowledge.

There was however wide differences on how the two teachers approached their teaching. Ms K's lessons were more teacher centred whereas Mr A's lessons were learners centred. Both teachers showed content mastery but in difference forms. In the next chapter the findings and recommendations for this research are discussed.

Chapter 5: Findings, Conclusions, Implications and Recommendations.

5.1 Introduction.

In this chapter, the researcher discussed the findings based on the data analyzed and discussed in chapter 4 and draw conclusions in line with two research questions. The researcher also discussed recommendations based on the findings.

5.2 The findings.

This research study examined mainly the impact of Pedagogical Content Knowledge in the teaching of the topic on “Capacitance” to grade 11 Physical Sciences learners in Mpumalanga, South Africa. While details of the study and context have been laid out in the earlier sections of this report, the research questions this study sought to answer are reproduced here.

Question 1

1. How is the teachers’ pedagogical knowledge (PCK) portrayed in teaching Capacitance?

Question 2

2. To what extent have teachers’ mastered the Content Knowledge about Capacitance?

The following is a presentation of the findings based on each research question.

5.2.1 How was the teacher’s Pedagogical Content Knowledge portrayed in teaching “Capacitance”?

5.2.1.1 The case of Mr A.

Aspects of Pedagogical Content Knowledge that were covered by Mr A.

Mr A has shown more engagement of learners by getting them to discuss in groups and by engaging with learners at their different groups during discussions. The benefit of such engagement of learners is well supported by Carr et *al*., (1994, p.150) when they say that “procedure in which there is more conversation about learning provides a better base for further learning”.

Another important outcome of conversations from groups has been laid out by Carr et al., (1994). As Carr et al., (1994) explain, if learners come to lessons with ideas about the world which already make sense to them, then the teaching needs to interact with these ideas, firstly by encouraging their “declaration” and then by promoting consideration of whether the learners ideas that they bring to learning make sense (Carr et *al*., 1994, p.150).

Mr A used simulations to explain that the function of dielectric is to reduce the electric field between the plates so that more electrons can crowd on the plates thereby increasing the charge that can be held. He used a representation shown as figure 1 in section 4.2.1 to explain that the dielectric inserted between the plates of a capacitor becomes polarized when the capacitor is connected to a battery, under this arrangement; the electric field induced in the dielectric opposes the field between the plates.

Mr A used an example of a cheese roll to explain the dielectric in a capacitor. He added by using an example of a stadium and spectators to explain the relation between the size of a capacitor and the capacity in which a capacitor can store charge.

The example appeared to be inappropriate but Mr A’s approach was in line with van Driel, Verloop and de Vos(1998) explanation that it is essential for a teacher to use more than one representation during a lesson to be able to deploy his/her Pedagogical Content Knowledge. Though Mr A. did not cover this fully, he used simulations and diagrams to explain how the charging and

discharging processes in a capacitor take place. This is supported by Shulman (1986, p.9) when he said that “Pedagogical Content Knowledge include the most useful forms of representation of topics, illustrations, explanations and demonstrations.”

Aspects of Pedagogical Content Knowledge that were not covered by Mr A.

Mr A asked learners to bring along a capacitor each for the second lesson, but none of the learners brought a capacitor. This failure on the part of the learners could also be explained on the fact that Mr A did not take full consideration of learners based on their background (Section 3.6.2). Considering the learners’ background it could have happened that they did not find a find a used device to detach the capacitor or they could not buy one due to financial constraints. It could also happen that they just did not want to bring along the capacitor.

A better understanding of the background of the learners could have informed Mr A on how to deal with this issue. It appears that Mr A was not fully aware of the learner’s background or the attitudes they normally display.

Mr A did not follow the CoRe as designed when presenting his lessons. His lessons were not structured to achieve the outcome of each idea at the time. His class activities were not linked to achieve a particular idea. For example prompt of big idea 1 in (Appendix 27) of his CoRe was addressed by a different activity and that was getting learners to discuss 5 electronic components they experienced in their everyday situations.

Though his lessons were more learner centred, he seemed not be co-ordinating his teaching procedures to be able to get his learners to fully grasp the content to be learned as planned in his CoRes. Loughran et *al*., (2006,p.49) explained that expertise in choosing “teaching procedures that are appropriate to the intended learning outcomes and knowing not only how to use them, but why, under what changed circumstances and, being able to adjust and adapt them to meet the contextual needs of the time” is an

important aspect of Pedagogical Content Knowledge. My findings based on this question depict that although Mr A. showed general understanding of Pedagogical Content Knowledge, he had not grasped well the role of CoRes in his teaching.

5.2.1.2 The case of Ms K.

Aspects of Pedagogical Content Knowledge that were covered by Ms K.

Though most of her lessons were teacher centred, she gave learners questions to work out in class and also gave some as homework. At some point she invited two learners to the board to solve a problem, giving them the opportunity to interact with their peers. Ms K demonstrated some PCK in the following ways: She explained all concepts prescribed for teaching "Capacitance" to grade 11 learners. She also engaged learners through class work and homework. At some point she invited learners to explain using the chalkboard on how they arrived at solutions of questions that were given as homework. Finally she used simulations and practical demonstrations to explain the scientific processes involved in the functioning of a capacitor. This is supported by Loughran et *al*., (2006) that PCK becomes evident through the teacher's pedagogical reasoning and decision making with the context of teaching particular science content.

Though Loughran et *al*., (2006) talk much of constructivist integrated approach in teaching Pedagogical Content Knowledge, they acknowledge that there are many successful and effective ways of teaching a particular science content. Loughran et *al*., (2006) explain that the teacher's thinking about teaching is complex and that there are ways of sharing teacher's professional knowledge of teaching to further enhance understanding and learning in science.

Her instructional strategies included examples of everyday use of capacitors. She explained how a camera flash works. Ms K also explained how applicable is "Capacitance" in the functioning of a computer. She used an example of the keyboard keys of a computer to explain how the difference in

“Capacitance” make it possible for words to appear on the screen of a computer when a person is typing (Cutnell & Johnson, 1995). She used a representation of a diagram of a capacitor to explain the application of capacitors in real life situations. She used the key board of a computer as an example because even though the learners come from an impoverished background, several learners at the school have access to cell phones. She carefully used this example drawing on learner’s experiences of lap tops which are made available to learners by the mobile laboratory provided by organization X. This connects well with Loughran et *al*., (2006, p.20) when they recommended use of “representations of topic specific Pedagogical Content Knowledge to make explicit the nature of teachers’ pedagogical reasoning and the associated decision making with the context of teaching of that particular science content.”

Aspects of Pedagogical Content Knowledge that were not covered by Ms K.

Loughran et *al*., (2006) emphasize that successful use of Pedagogical Content Knowledge requires teachers to apply teaching approaches that will enable them to promote learning in ways other than telling. In three of her four lessons she explained concepts without directly engaging with the learners. For example, listening to their views on how they understood the concepts or giving them the opportunity to discuss in groups. In lesson 3 Ms K explained the contents of an opened capacitor. Most of the time, Ms K would resort to telling method as opposed to giving activities that would engage learners in developing new meaning out of what she taught.

Hatano (1996) indicated that knowledge is acquired by construction and not by transmission alone. Brown et al in Hatano (1996, p.200) explain that knowledge acquisition is “situated” in contexts. Moreover, (DoE, 2006) explains that the teacher should consider employing different teaching styles during the teaching of science concepts. One of the teaching styles is co-operative teaching. Co-operative teaching style entails that the teacher should involve learners in a small group task where active participation of all learners in a group is required for success. The group does not need direct

supervision from the teacher but the teacher is there to give support (DoE, 2006).

Ms K relied much on teacher centred approach. She hardly employed the other different teaching styles. The schedule of results attached in appendix 21 indicates poor performance in Ms K learners in the first two terms of the year in which this study was undertaken. A single approach to teaching such learners may jeopardize learners a chance of grasping the content properly. Ms K had prepared a CoRe with four big ideas, during her lessons presentation the researcher observed that her lessons were not consistent to the big ideas outlined in the CoRE. Based on these findings, Ms K appeared to have portrayed general Pedagogical Content Knowledge.

5.2.2 To what extent have the teachers mastered the Content Knowledge about "Capacitance."?

5.2.2.1 The Case of Mr A.

Firstly, Mr A was able to design a CoRe after a short workshop that was held just before the research started. His CoRe contained four big ideas and several prompts. The CoRe was designed as prescribed by Loughran et al (2006). According to Loughran et *al.*, (2006), a CoRe provides a base around which an overview of teachers Pedagogical Content Knowledge for a topic can be articulated, and provides insight into the decision that a teacher can make when teaching a particular topic. Though he did not follow the CoRe as expected, he was able to explain how each big idea could be addressed.

Mr A showed content mastery when he explained the definitions of concepts to learners. He used visuals such as computer simulations backed up by relevant science explanations to help learners develop a better understanding of how a capacitor operates. Gobert (2007) emphasize that visualizations are key in describing mental constructs.

In making decisions about what to teach, successful teachers draw on their knowledge of what science content is relevant to learners' everyday lives and how the content links with other areas that learners study. Mr A seemed to have paid particular attention to this in helping learners develop understanding of the concepts in "Capacitance". This appeared to be a difficult task for him though, because of the background of the learners.

5.2.2.2 The Case of Ms K.

Ms K was also able to design a CoRe for her lesson. She also designed four big ideas with clear explanation on how big idea could be achieved. In designing her CoRe, each of the big ideas designed showed an insight of what learning activities should be employed during the teaching of the topic on "Capacitance".

Loughran et *al*., (2006) explain that when creating or working with a CoRe, it is important to recognize that some sections may contain more detail than the others. However, because of the form of representation that a CoRe takes, it allows for changes and additions to be made as further insights are gained or issues are further clarified and refined. Ms K did not follow the CoRes as designed however, she attempted to cover the explanation involving Mathematical equations precisely.

Ms K integrated technology into her teaching of the topic on "Capacitance". For example, she used simulations to demonstrate the charging and discharging processes of a capacitor. She also used an example of a camera flash to explain the relevance of "Capacitance" to real life situations. In addition, she used "Capacitance" to explain how the keys of a computer function.

According to (DoE, 2006), during learning, learners must be made aware that Physical Sciences is a subject that is all around them. They need to refer and relate daily to what is scientific and technological around them. Eventually, they themselves will start to see, hear, feel and experience insights and understanding gained from the teaching of Physical Sciences.

The findings based on this question are that both teachers showed content mastery in one way or another. Mr A showed some depth of content mastery because he always tried to go deeper in explaining concepts and phenomena that were perceived difficult by the learners. For example in lesson two he used a representation to explain the scientific phenomenon behind the charging of a capacitor. Ms K used more of information sharing as her teaching style. According to (DoE,1997), information sharing as a teaching style requires the teacher to do more lecturing, talk and chalk discussions and explanation of concepts and terms.

5.3 Summary of findings.

Both participant teachers used integrated technology effectively during their teaching. According to (DoE, 2006), education in South Africa is informed by seven critical outcomes. These critical outcomes should be reflected in the teaching style and methodologies that Physical Sciences teachers use, together with learning activities and experience the learners are exposed to (DoE, 2006). Critical Outcome number 6 talks about the use of technology effectively and critically, showing responsibility towards the environment (DoE, 2003). This critical outcome explains that the responsibility to manage and use scientific and technological knowledge to the advantage of human beings and the environment must be emphasized. Following the definition of PCK outlined in section 1.3, it is important that teachers understand the curriculum in which they are working. Integrating technology to the learning of science is one of the key components of the grade 11 curriculum. PCK also encourage teachers to connect learning to real life experiences of which technology is part.

Both teachers were Physical Sciences teachers and thus they shared certain generic qualities of professional teachers. Ms K was able to control her class despite the fact that she spent more time talking during her lessons. While Mr A resorted to a learner centred approach during his teaching, he still managed not to lose focus of what he planned to achieve in each lesson.

There were however important differences. Mr A had the flexibility in his knowledge of content that allowed him to navigate more effectively through his interaction with learners when they were given group activities.

Although his explanation of concepts showed certainty in those concepts but he did not explain well the mathematical relation of some concepts. For example, he did not explicitly explain how mathematical equations are employed to explain the mathematical relation between “Capacitance” and distance between capacitor plates as well as “Capacitance” and area.

Ms K on the other hand had confined most of the teaching to the grade 11 syllabus. The worksheets she used were pace setter driven as required by the Mpumalanga department of education. By pace setter driven I mean she only gave questions that are within the confines of what she was expected to teach in the grade 11 syllabus. This showed improvement in Ms K curricular saliency.

The use of Content Representations was not well structured in both teachers’ lessons. This could be attributed to the fact that they only heard of CoRes for the first time at the workshop they attended just before the research was conducted.

Linking the findings to the research questions one can conclude that both teachers portrayed general Pedagogical Content Knowledge through the teaching of the topic on “Capacitance” but with important differences. Mr A had flexibility in his knowledge of content that allowed him to use some relevant examples outside the pace setter. He was also able to build on learners’ prior knowledge and thus make effective links to the learners. Ms K on the other hand, operated strictly on what she has prepared for each lesson and always found it necessary to stick to a prepared lesson plan.

Both teachers have shown content mastery through their teaching. They were able to explain concepts as prescribed in the grade 11 curriculum.

5.4 Recommendations.

Schulman (1986) conceived the idea of Pedagogical Content Knowledge while Loughran et *al*., (2004) realize a need of integrating constructivist approach to be able to justify effective Pedagogical Content Knowledge (PCK). Since PCK is a new construct, it is important that it is implemented properly to make science teaching meaningful and understandable. The findings of this study which are summarized in 5.3 indicated that the participant teachers have a general PCK. The grade 11 curriculum has been designed such that PCK rich teachers are suitable to teach lessons more effectively. Both Ms K and Mr A could have taught their lessons much better had they been exposed to PCK in detail.

Various approaches to achieve this have been put forward in literature for example van Driel et *al.,* (1998) and McDermott et *al*.,(2000) but teachers may not be able to decide which of the methods will work for them unless they are tried out. The use of Pedagogical Content Knowledge teaching strategies is one approach that has been recommended for use by teachers in order to promote learning for conceptual understanding by learners.

The methods of use or the way Pedagogical Content Knowledge is implemented in the classroom is of utmost importance. The use of instructional methods such as computer aided visuals or simulations could be used to compliment other methods such as tutorials, analogies and practical experiments to be able to help learners understand learning concepts. At the workshop held before this research was conducted, Mr A showed much interest on the construct PCK but also suggested that schools should be well resourced if they are to benefit from engaging in this exercise. Both participant teachers were teaching at schools that were poorly resourced. It is essential that teachers who teach under these circumstances should develop a strategy in which they can still teach effectively.

Teachers need to develop their Pedagogical Content Knowledge to be able to adequately address challenges facing the teaching of Physical Sciences. The important implication of teachers' lack of Pedagogical Content

Knowledge is that the learners' development is hampered by the National Curriculum Statement because it requires teachers to have adequate Pedagogical Content Knowledge to be able teach effectively.

According to the two participant teachers' experiences gathered from the workshop held at the beginning of this study, the Mpumalanga Department of Education still have a lot to do to help teachers improve their teaching. The schools are not properly resourced and the teachers need more support to cope with the demands of the requirements stipulated in the National Curriculum Statement. Teachers need more mentoring and more support to be able to teach according to such requirements.

Workshops need to be more practical in nature and they should cover all necessary aspects required by the teacher to teach effectively in the classroom. In addition, the DoE needs to work more closely with institutions of higher learning (HEI's) and non- governmental organizations (NGO's) with regards to in-service training programmes.

Teachers should be encouraged to enroll for DoE sponsored accredited short learning programmes, offered by university experts and also attend content workshops offered by NGO's. A need analysis can be done jointly by the DoE and HEI's in order to determine the exact areas where teachers require assistance and training.

The department of education needs to allocate funds specifically earmarked for the provision of essential resources, specifically for disadvantaged schools. An audit needs to be done to determine the specific needs of each school or create cluster centres. By cluster centre, the researcher means a school situated in a position where it could be easily accessed by neighbouring schools. The cluster centre should then be equipped with all resources that could be shared with the neighbouring schools.

The use of expert curriculum advisors or curriculum implementers as they are called in Mpumalanga should be considered. The qualified expert curriculum advisor should be assigned to a cluster of schools and must be

equipped with all resources required to be able to support teachers who have challenges with any aspect of Pedagogical Content Knowledge. It is of utmost importance that the curriculum implementers be trained as masters of Pedagogical Content Knowledge so they are better informed on how to support teachers who experience challenges with teaching in the classroom.

The expert curriculum advisor can visit a particular selection of schools on a regular basis to provide support and encouragement to local teachers. Ideally, the expert curriculum advisor should be appointed to do actual teaching where a teacher really experience challenges of teaching. In South Africa, in particular, “the quality of teaching and learning especially in previously disadvantaged schools, need to improve in order to address the inequalities brought about by apartheid education”(Motshekga 2009, p.3). This implies that the teachers at these schools need to be “competent”, in other words, they need to have improved Pedagogical Content Knowledge and be confident about their ability to facilitate teaching and learning in their classrooms (Shulman 2004, p.313).

5.5 Conclusion

From the lesson observations, interviews and workshop conducted with the teachers the following conclusion is drawn: Improved Pedagogical Content Knowledge could be evident if teachers could be developed in aspects of PCK which include Subject Matter Knowledge, instructional strategies, design of CoRes and curricular saliency, subject matter representation and integration of teacher knowledge when teaching in the classroom. For this to happen teachers should receive regular support from experts who have undergone training on these aspects.

Also from the findings, one can also draw a conclusion that using one approach of teaching is not essential to make learners understand what is being taught in class. At the same time too many teaching approaches may not yield satisfactory results if not well structured. The teacher must plan well in advance which approach should be employed when teaching. Each teaching approach employed should take into consideration the context

where the learners find themselves in.

5.6 Reflections.

The researcher's experience of conducting the research is that comparing teachers who do not have the same qualifications affected the outcomes of the research study because this increased the chances of the researcher being bias in reaching the conclusions of the study. The researcher has also learnt that choice of participants is important in any research. The researcher's position was that it was fair to assume that there were similarities between teachers in Mpumalanga because of their similar backgrounds in teaching and learning of Physical Science.

Accessing the research site was nerve breaking for the researcher because both teacher participants and their learners were familiar to him. While it was an advantage to him to interact with people that he knew, remaining neutral and still follow the ethical guidelines was not an easy exercise. The data collected form an important aspect of research. If data collected has misleading, false outcomes will come out in such a research. Validity and trustworthiness are key aspects in conducting research.

This study has transformed the researcher's thinking in the following ways: Firstly, in doing research, the researcher must learn how to deal with type of participants she/he is familiar with. Secondly, the way the researcher interacts with the participant is key. For instance, holding on to answers by allowing the research to occur in its natural setting is important.

If given another chance to conduct the study, the researcher would need more time in observing the lessons and thus gather more data. From the findings, Ms K comes out as a teacher who is keen in teacher centred approach. Probably if more time was allocated to lessons observations, Ms K would have shown other teaching styles of presenting lessons.

The researcher would improve on the way in which he captured data. Instead of using a tape recorder, he would have used a video camera. In

using the video camera, the researcher would not be restricted to audio scripts only. The body movements and the participants' reaction can add more information to the data to be collected.

Following the information alluded to in section 1.3, there is a huge need for continuous research in education to be able to advise education authorities on how teaching and learning challenges could be addressed. One can only give a better advice based through a well conducted research. Understanding how research is conducted is important.

6. REFERENCES.

American Association for the Advancement of Science (1998). *Blueprints for Reform : Science, Mathematics and Technology Education*. New York : Oxford University Press.

Asmal, K., & Hadland. (2011). *Politics in my blood*. South Africa, Jacana Media (Pty) Ltd.

Bloomberg,L.D. & Volpe, M. (2008). *Completing Your Qualitative Dissertation, a Roadmap from Beginning to End.* Los Angeles: Sage Publications.

British Educational Research Association (1992) Ethical guidelines. Retrieved 22nd May , 2004 from http://www.bera.ac.uk/guideline.html/.

Brown,S.J., Collins, A. & Duguid, P. (1989). Situated Cognition and the Culture of Learning. *Educational Researcher*, 18 (1), 32-41.

Bullough,R. V. (2001). Pedagogical Content Knowledge circa 1907 and 1987: a study in the history of an idea. Journal of Teaching and Teacher Education, 17, 655-666.

Burgess,R.G. (1984). In the Field - An Introduction to Field Research. London: Routledge.

Carr, M. Barker, M., Bell, B. Biddulph, F. Jones, A., Kirkwood, V.,Pearson, J & Symington, D. (1994). The constructivist paradigm and some implications for science content and pedagogy. In Fensham,P.,Gunstone,R.& White, R. *The Content of Science: a constructivist approach to its teaching and learning*. (pp.147-158). London: Falmer Press.

Clark, C. C., & Peterson, P. L. (1986). *Teachers' thought processes*. In M. C. Wittrock (Ed.), Handbook of research on teaching, 3rd ed. (pp. 255-296). New York: Macmillan Publishing Co.

Cochran, K. F., King, R. A., & De Ruiter, J. A. (1991). *Pedagogical Content Knowledge: a tentative model for teacher preparation*. Paper presented at the Annual Meeting of the American Educational Research Association, April, 1991, Chicago.

Cohen, L., Manion, L. & Morrison, K. (2007). *Research Methods in Education.* New York:

Corbetta, P. (2003). *Social Research Theory, Methods and Techniques.* London: SAGE Publications.

Cross, M., Mungadi, R. & Rouhani, S. (2002). From Policy to Practice: curriculum reform in South African education [1]. *Comparative Education,* 38(2), 171-187.

Cutnell, J.D. ,& Johnson, K.W. (1995) .Physics. International Edition (3rd Edition).USA

David, M. & Sutton C.D. (2004). *Social Research the Basics.* London: SAGE Publications.

De Vos, A.S. (1998). *Research at grass roots: A primer for the caring professions.* Pretoria: Van Schaik Publishers.

Denscombe,M. (2007) *The Good Research Guide for small-scale social research projects*. Maidenhead, England: Open University Press.

Department of Education. (1997). *Curriculum 2005. Lifelong learning for the 21st Century*. Pretoria: Department of Education.

Department of Education. (2003). *National Curriculum Statement* Grades 10-12 General. Pretoria. Seriti Printing Pty) Ltd.

Department of Education. (2006). *Revised National Curriculum Statement Grades 10-12.* Pretoria: Department of Education.

Department of Basic Education. (2011). *Guidelines on the organization, Roles and Responsibilities of Education Districts*. Pretoria: Department of Education.

Department of Basic Education. (2011). *National Diagnostic report on learner performance*. Pretoria: Department of Basic Education.

Department of Basic Education. (2012). *Feedback on the 2011 NSC examination and resource material*. Mpumalanga: Department of Basic Education.

Driver, R., Asoko, H., Leach, J., Mortimer, E., & Scott, P. (1994). Constructing scientific knowledge in the classroom. *Educational Researcher*, 23(7), 5-12.

Eylon, E. and Bagno, E. (2006): *Research-design model for professional development of teachers: education research*. The Science Teaching Department, Weizmann Institute of Science, Rehovot, Israel, 761.

Fenstermacher, G. D. (1994). The knower and the known: the nature of knowledge in research on teaching. *Review of Research in Education*, 20, 3-56.

Geddis, A. N., Onslow, B., Beynon, C., & Oesch, J. (1993). Transforming Content Knowledge: learning to teach about isotopes. *Science Education*, 77(6), 575-591.

Gess-Newsome, J. (1999). Secondary Teachers' Knowledge and Beliefs about Subject matter and their impact on instruction. In J.Gess-Newsome & N. Lederman(Eds.), *Exa**m**ining Pedagogical Content Knowledge*(pp.51-94). Dordrecht : Kluwer.

Giancoli, D. C. (1991). *Physics: Principles with Applications.* International Edition (3rd Edition). Pearson Prentice Hall.

Gobert, J. D. (2007). Leveraging Technology and Cognitive Theory on Visualization to Promote Students' Science Learning and Literacy. In John K. Gilbert (ed.) *Visualization in Science Education.* 73-90. Dordrecht: Springer.

Gray, D. E. (2004). *Doing Research in the Real World.* London: SAGE Publications.

Gudmundsdottir, S. (1987). Pedagogical Content Knowledge: teachers' ways of knowing. Paper presented at the Annual Meeting of the American.

Halliday, D., Resnick., R. and Walker, J. (1993). *Fundamentals of Physics*. USA. John Wiley and Sons.

Harrison, A. G., & Treagust, D. F. (2000). A typology of school science models. *International Journal of Science Education,* 22(9), 1011-1026.

Hatano,G.(1996). A conception of knowledge acquisition and its implications for mathematics education. In P. Steffe, P. Nesher, P. Cobb, G. Goldin & B. Geer (Eds), *Theories of mathematical learning* (pp. 197-210). New Jersey: Lawrence Erlbaum.

Hays, P. A. (2004). Case study research. In K. de Marrais & S. D. Lapan (Eds.), *Foundations for research: Methods of inquiry in education and the social sciences* (pp. 217-234). Mahwah, NJ: Lawrence Erlbaum Associates.

Hewson, P.W., Beeth, M.E. and Thorley, N.R. (1998). Teaching for conceptual change in Fraser, B and Tobin, K.G. International handbook of Science Education, 199-218. Dordrecht: Kluwer.

Hollon, R. E., Roth, K. J., & Anderson, C. W. (1991). Science teachers' conceptions of teaching and learning. In J. Brophy (Ed.), *Advances in Research on Teaching* (Vol. 2, pp. 145-185). New York: JAI Press, Inc.

Husu, J. (1995). *Teachers' pedagogical mindset - a rhetorical framework to interpret and understand teachers' thinking*. Paper presented at the 7th Biennial Conference of the International Study Association on Teacher Thinking (ISATT), Ontario, Canada.

Jimoyiannis, A., and Komis, V. (2001). Computer simulations in physics teaching: a case study on students' understanding of trajectory motion. *Computers & education, 36*, 183-204.

Jooste, H., and White, C.J (2011). Education for all: Experiences of principals of rural secondary schools in Mpumalanga province, *Africa Education Review*, 8, (3) ,588-600.

Justi, R., & Gilbert, J. K. (2003). Teachers' views on the nature of models. *International Journal of Science Education*. 25: 11, p.1369-1386.

Kajornboon, A. B. (2004) *Creating Useful Knowledge: A Case Study of Policy Development in E-learning at Chulalongkorn University Language Institute.* Dissertation. University of Melbourne: Australia.

Kriek J & Grayson D.J., (2009). A holistic Professional model for South African Physical Science teachers. *South African Journal in Education*,29 (2), 185 – 203.

Kvale, D. (1996). *Interviews.* London: SAGE Publications.

Langley, P., & Cubitt, A. (1987). *Doing Social Research*: A Guide to Coursework. Causeway Publishers.

Leach, J., & Scott, P. (1999, August). *Teaching and learning science: Linking individual and sociocultural perspectives*. Paper presented at the Meeting of

the European Association for Research in Learning and Instruction, Goteborg, Sweden, as part of the symposium 'In memory of Rosalind Driver: Advances in research on science learning.'

Leinhardt, G., & Smith, D.A. (1985). Expertise in Mathematics Instruction: Subject Matter Knowledge. *Journal of Educational Psychology*, 77(3), 247-271.

Loughran, J., Mulhall, P., Berry. J. (2004). A In search of Pedagogical Content Knowledge in Science: Developing Ways of Articulating and Documenting Professional Practice: JRST41(4) 370-391.

Loughran, J., Mulhall, P., & Berry, A. (2006). *Understanding and developing science teachers Pedagogical Content Knowledge.* Rotterdam: Sense Publishers.

Makgato, M. (2007). Factors associated with poor performance of learners in mathematics and physical science secondary schools in Soshanguve, South Africa; *Africa Review*, 4:1, 89-103.

McDermott, L.C., & Shaffer, P.S (1992). Research as guide for curriculum development: An example from introductory electricity. Part I: Investigation of student understanding. *American Journal of Physics*, 60(11). 994 – 1003.

McDermott, L.C., Schaffer, P.S & Constantinou, C.P. (2000). Preparing teachers to teach Physics and Physical Science by enquiry. *Physics Education*,36(6),411-415.

McMillan, J., and Schumacher, S. (2001). *Research in education: A conceptual introduction.* New York Longman.

Motshekga, A. (2009). We've signed OBE's death certificate. *Statement by Minister of Basic Education, Angie Motshekga, on curriculum review process, National Assembly.* Pretoria : Department of Education.

Opie,C. (2004). *Doing Educational Research*. London: SAGE Publications.

Orwell, M. (1999). How does a camera flash work?, Retrieved 13th January 2013 from the World Wide Web: http://www.ehow.com /how does a camera flash work.html.

Pfundt, H., & Duit, R. (1994). Bibliography-Students' alternative frameworks and science education. Kiel, Germany: IPN.

Piaget, J. (1978). What is psychology? *American Psychologist*, 33, 648-652.

Rogan,J., & Aldous,C. (2005).The Relationship between the construct of a theory of curriculum implementation. *Journal of Research in Science teaching*, 42(3), 313 - 336.

Rollnick, M., Bennet, J., Rhemtula, M., Dharsey, N.,& Ndlovu, T.(2008). The place of Subject Matter Knowledge in PCK-Acase study of South African teachers teaching the amount of substance and equilibrium. *International Journal of Science Education*,30(10),1365-1387.Routledge.

Scott, P., Asoko, H., Driver, R. and Amberton, J. (1994). Working from Children's Ideas: Planning and Teaching a Chemistry Topic from a Constructivist Perspective. In P. Fensham, Gunstone, R., White, R. (Ed.), *The Content of Science: A constructivist approach to its teaching and learning* (pp. 201-220). London: Falmer Press.

Shulman, L. S. (1986). *Handbook of research on teaching.* New York: Macmillan.

Shulman, L. S. (1987). Knowledge and teaching: foundations of the new reform. *Harvard Educational Review*, 57(1), 1-22.

Shulman, L.S. (2004). *The Wisdom of Practice. Essays on Teaching, Learning and Learning toTeach.* San Francisco: Jossey-Bass.

Smith III, J. P., & Girod, M. (2003). John Dewey & psychologizing the subject-matter: big ideas, ambitious teaching, and teacher education. *Teaching & Teacher Education*, 19, 295-307.

Stake, R.E. (1995). *The Art of Case Study Research: Perspective in Practice*. London: Sage Publishing.

Tobin, K., Tippins, D. J., & Gallard, A. J. (1994). *Research on instructional strategies for science teaching*. In D. L. Gabel (Ed.), Handbook of research on science teaching and learning (pp. 45-93). New York: Macmillan Publishing Company.

Trey, L. and Khan, K (2008). How science students can learn about unobservable phenomena using computer-based analogies. *Computers & Education, 51* (2008) 519–529.

Van Driel, J. H., Verloop, N., & De Vos, W. (1998). Developing science teachers' Pedagogical Content Knowledge. *Journal of Research in Science Teaching*, 35(6), 673-695.

Vavougios, D. and Karakasidis, T. E. (2008). Application of ICT Technology in Physics Education: Teaching and Learning Elementary Oscillations with the Aid of Simulation Software. *International Journal of Emerging Technologies in Learning*, 3(2), 53-58.

Verma, G. K. & Mallick, K. (1999). *Researching Education: Perspectives and Techniques*. London. Falmer Press.

Vygotsky, L. (1978). *Mind in Society.* London: Harvard University Press

Yin, R., (1994). *Case study research: Design and methods* (2nd ed.). Beverly Hills, CA: Sage Publishing.

Yin, R. K. (2003). *Applications of case study research* (2nd ed.). Thousand Oaks, CA: Sage Publishing.

7. LIST OF APPENDICES

APPENDIX 1

Wits School of Education

27 St Andrews Road, Parktown, Johannesburg, 2193 • Private Bag 3, Wits 2050, South Africa

Tel: +27 11 717-3007 • Fax: +27 11 717-3009 • E-mail: enquiries@educ.wits.ac.za • Website: www.wits.ac.za

STUDENT NUMBER: 331930

Protocol: 2009ECE53

03 November 2009

Mr. Bailey Nkuna

P O Box 6253

NELSPRUIT

1200

Dear Mr. Nkuna

Application for Ethics Clearance: Master of Science

I have a pleasure in advising you that the Ethics Committee in Education of the Faculty of Humanities, acting on behalf of the Senate has agreed to approve your application for ethics clearance submitted for your proposal entitled:

The impact of Pedagogical Content Knowledge (PCK) in the teaching of the topic of "Capacitance" to Grade 11 Physical Science learners.

Recommendation:

Ethics clearance is granted

Yours sincerely

Matsie Mabeta

Wits School of Education

Cc Supervisor: Dr. F Mundalamo (via email)

APPENDIX 2

MPUMALANGA DEPARTMENT OF EDUCATION

RESEARCH REQUEST FORM

REQUEST TO CONDUCT RESEARCH IN SECONDARY SCHOOLS OF THE MPUMALANGA DEPARTMENT OF EDUCATION

1. PARTICULARS OF THE RESEARCHER

1.1	**Details of the Researcher**
Surname and Initials:	NKUNA BH
First Name/s:	BAILEY HAIZANE
Title (Prof / Dr / Mr / Mrs / Ms):	MR
Student Number (if relevant):	331930
ID Number:	7204215305088

1.2	**Private Contact Details**
Home Address	***Postal Address (if different)***
	P.O BOX 6253
	NELSPRUIT
	1200
Postal Code: 0184	
Tel: NONE	
Cell: 0827708324	
Fax: 0137589099	
E-mail: [redacted]	

2. PURPOSE & DETAILS OF THE PROPOSED RESEARCH

2.1	*Purpose of the Research (Place cross where appropriate)*
Undergraduate Study – Self	
Postgraduate Study – Self	
Private Company/Agency – Commissioned by Provincial Government or Department	
Private Research by Independent Researcher	
Non-Governmental Organisation	
National Department of Education	
Commissions and Committees	
Independent Research Agencies	
Statutory Research Agencies	
Higher Education Institutions	X

2.2	*Full title of Thesis / Dissertation / Research Project*
THE IMPACT OF PEDAGOGICAL CONTENT KNOWLEDGE (PCK) IN THE TEACHING OF THE TOPIC ON "CAPACITANCE" TO GRADE 11 PHYSICAL SCIENCES LEARNERS.	

2.3	**Value of the Research to Education (Attach Research Proposal)**
Attached - see proposal	

2.5	**Student and Postgraduate Enrolment Particulars (if applicable)**
Name of institution where enrolled:	UNIVERSITY OF WITWATERSRAND
Degree / Qualification:	MASTERS IN SCIENCE EDUCATION
Faculty and Discipline / Area of Study:	EDUCATION

Name of Supervisor / Promoter:	DR FHATUWANI MUNDALAMO

2.6	**Employer (where applicable)**	
Name of Organisation:		[redacted]
Position in Organisation:		PROGRAMME ORGANIZER
Head of Organisation:		[redacted]
Street Address:		[redacted] NELSPRUIT 1200
Postal Code:		1200
Telephone Number (Code + Ext):		0827708324
Fax Number:		
E-mail:		[redacted]

2.7	**PERSAL?? Number (where applicable)**

3. PROPOSED RESEARCH METHOD/S

(Please indicate by placing a cross in the appropriate block whether the following modes would be adopted)

3.1 *Questionnaire/s (If Yes, supply copies of each to be used)*

YES	**X**	**NO**	

3.2 ***Interview/s (If Yes, provide copies of each schedule)***

YES	**X**	**NO**	

3.3 ***Use of official documents***

YES		**NO**	**X**
If Yes, please specify the document/s:			

3.4 ***Workshop/s / Group Discussions (If Yes, Supply details)***

YES	**X**	**NO**	
A TEACHER WORKSHOP ON "CAPACITANCE" WILL BE CONDUCTED BEFORE THE RESEARCH			

3.5 ***Standardised Tests (e.g. Psychometric Tests)***

YES		**NO**	**X**
If Yes, please specify the test/s to be used and provide a copy/ies			

4. INSTITUTIONS TO BE INVOLVED IN THE RESEARCH

4.1 ***Type of Institutions (Please indicate by placing a cross alongside all types of institutions to be researched)***

INSTITUTIONS	**Mark with X here**
Primary Schools	
Secondary Schools	X
ABET Centres	
ECD Sites	
LSEN Schools	
Further Education & Training Institutions	
Other	

4.2 ***Number of institution/s involved in the study (Kindly place a sum and the total in the spaces provided)***

Type of Institution	**Total**
Primary Schools	
Secondary Schools	**2**
ABET Centres	
ECD Sites	
LSEN Schools	
Further Education & Training Institutions	
Other	
GRAND TOTAL	**2**

4.3 ***Name/s of institutions to be researched (Please complete on a separate sheet if space is found to be insufficient)***

Name/s of Institution/s
K SECONDARY SCHOOL
A SECONDARY SCHOOL

4.4 District/s where the study is to be conducted. ***(Please indicate by placing a cross alongside the relevant district/s)***

REGION	
EHLANZENI REGION	**X**

If Head Office/s (Please indicate Directorate/s)

4.5 *Number of learners to be involved per school (Please indicate the number by gender)*

Grade	1		2		3		4		5		6	
Gender	*B*	*G*	*B*	*G*	*B*	*G*	*B*	*G*	*B*	*G*	*B*	*G*

Number												

Grade	7		8		9		10		11		12	
Gender	*B*	*G*	*B*	*G*	*B*	*G*	*B*	*G*	*B*	*G*	*B*	*G*
Number									*40*	*70*		

4.6 *Number of educators/officials involved in the study (Please indicate the number in the relevant column)*

Type of staff	*Educators*	*HODs*	*Deputy Principals*	*Principal*	*Lecturers*	*Office Based Officials*
Number	*2*					

4.7 Are the participants to be involved in groups or individually?

Participation	
Groups	
Individually	**X**

4.8 Average period of time each participant will be involved in the test or other research activities (Please indicate time in minutes)

Participant/s	**Activity**	**Time**
X	LESSON OBSERVATIONS	6 HOURS

4.9 Time of day that you propose to conduct your research.

School Hours	*During Break*	*After School Hours*
X		

4.10 School term/s during which the research would be undertaken

First Term	*Second Term*	*Third Term*
		X

DECLARATION BY THE RESEARCHER
1. I declare that all statements made by myself in this application are true and accurate.
2. I have taken note of all the conditions associated with the granting of approval to conduct research and undertake to abide by them.

Signature:	
Date:	*01 JUNE 2009*

DECLARATION BY SUPERVISOR / PROMOTER / LECTURER	
I declare that:	
1. The applicant is enrolled at the institution / employed by the organisation to which the undersigned is attached.	
2. The questionnaires / structured interviews / tests meet the criteria of: • Educational Accountability • Proper Research Design • Sensitivity towards Participants • Correct Content and Terminology • Acceptable Grammar • Absence of Non-essential / Superfluous items	
Surname:	***Mundalamo***
First Name/s:	***Fhatuwani James***
Institution / Organisation:	***University of the Witwatersrand***
Faculty / Department (where relevant):	***Science Education***
Telephone:	***011 717 3263***
Fax:	***086 663 1808***
E-mail:	***fhatuwani.mundalamo@wits.ac.za***
Signature:	
Date:	***29/06/2009***

APPENDIX 3

MPUMALANGA PROVINCIAL GOVERNMENT

Government Boulevard
Building 5, Upper Ground Floor
Riverside Park
NELSPRUIT
1200
Republic of South Africa

Private Bag X11341
NELSPRUIT
1200
South Africa

Tel. No.: (013) 766 5462
Fax No.: (013) 766 5577

Department of Education

Office of the HOD

Litiko LeTemfundvo *Umnyango weFundo* *Departement van Onderwys* *Umnyango weze Mfundo*

Tel: 013-766 0058
Fax: 013-755 4346
Email: k.mohan@education.mpu.gov.za

Mr. BH Nkuna
Programme Organiser
PENREACH
Nelspruit, 1200
Tel: (082) 770 8324

Dear Mr. Nkuna

PERMISSION TO CONDUCT EDUCATIONAL RESEARCH

With reference to your application for conducting an educational research on the "Impact of Teachers Pedagogical Content Knowledge" I have the pleasure to inform you that your application has been successful. The Mpumalanga Department of Education hereby gives approval to you to conduct research as outlined in your research proposal.

However, it should be noted that the process of conducting the research at school level shall be conducted after giving due notice of the activities to the Principal and educators involved and without disturbing the normal teaching and learning. You are also required to submit a copy of the final dissertation to the office of the DDG: Curriculum.

Wishing you success with your research.

Kind regards,

Mhlabane

MS. MOC MHLABANE
HEAD OF DEPARTMENT

11/11/2009
DATE

APPENDIX 4

Letter to the headmaster/principal

To the headmaster/principal,

My name is Bailey Nkuna, a part time Master's student at the University of the Witwatersrand, Johannesburg. I am investigating the impact of Pedagogical Content Knowledge (PCK) in the teaching of the topic on "Capacitance" to Grade 11 Physical Science. I would like to request for your permission to observe your grade 11 Physical Sciences when he teaches lessons on "Capacitance". I would also like to interview him/her and also capture data during the interview and when he/she is presenting lessons on "Capacitance".

There would be no interruption of your normal school programme, I would follow the normal school timetable and the Physical Science teacher schedule of attending classes. After the intervention, I would collect data by interviewing teacher. The data collected will be treated with confidentiality and the name of your school and the teacher will not be used in the analysis of the data.

The teacher will benefit from the research since he/she would be trained in the use of the intervention.

Please do not hesitate to contact me if you have any further queries or clarifications to make. My contact details are:

Cell number: 0827708324. Home: email: bailey@penryn.co.za

I look forward to your anticipated positive response.

Thank you.

Yours faithfully,

……..

B.H Nkuna

APPENDIX 5

Consent form for principal/headmaster

I _____ the headmaster/principal of _____ school hereby grant consent Bailey Haizane Nkuna to involve the Grade 11 Physical Sciences teacher and learners in his research.

The data collected will be treated with confidentiality and the name of the participants (teachers and learners) will not be mentioned in the analysis of the data. The participants (teachers and learners) may withdraw from the study at any time.

Title,Name and surname Mr

Signature: _____ Date: 14-10-2009

MPUMALANGA DEPT. OF EDUCATION
HIGH SCHOOL
EHLANZENI REGION
2009 -10- 15
PO BOX 3403 1245
OFFICE OF THE HEADMASTER

APPENDIX 6

Consent form for principal/headmaster

I_____ the headmaster/principal of _____ school hereby grant consent Bailey Haizane Nkuna to involve the Grade 11 Physical Sciences teacher and learners in his/her research.

The data collected will be treated with confidentiality and the name of the participants (teachers and learners) will not be mentioned in the analysis of the data. The participants (teachers and learners) may withdraw from the study at any time.

Signature: _____ Date: 15-10-2009

MPUMALANGA
DEPT OF EDUCATION
THE PRINCIPAL
SECONDARY SCHOOL
-10- 15
PO BOX 408 KANYAMAZANE 1214
TEL: (013) 796 4469
OUR MOTTO IS PROGRESS

APPENDIX 7

Letter to participant teachers

Dear teacher,

My name is Bailey Nkuna, a part time Master's student at the University of the Witwatersrand, Johannesburg. As part of the requirements for the award of a Master of Science degree in Science Education, I am investigating the impact of Pedagogical Content Knowledge (PCK) in the teaching of Physical Sciences concepts. I would like to request you to be part of my study. The study will involve the teaching of the topic on "Capacitance" to Grade 11 Physical Science learners. I would collect data by observation of the lessons and interview you after the intervention programme.

Participation in this research is voluntary and there will be no victimization whatsoever for refusal to participate.

There would be no interruption of your normal school programme, I would follow the normal school timetable. I would also collect data by interviewing the learners. The data collected will be treated with confidentiality and the names of your school, yourself and learners will not be divulged.

It is hoped that you will benefit from the research since you would be trained in the use of the intervention. The learners would also benefit from the method of instruction as it is hoped that this would enhance their understanding of the concepts.

Please do not hesitate to contact me if you have any further queries or clarifications to make. My contact details are:

Cell number: 0827708324 , e-mail: bailey@penryn.co.za

I look forward to your anticipated positive response.

Yours faithfully,

……..

B.H Nkuna

APPENDIX 8

Consent form for teachers to participate

I_ a teacher at

__ _ school hereby grant consent to Mr. Bailey Haizane Nkuna to be part of his research. The data that will be collected from me and my class should only be used for research purposes and conferences.

The data collected will be treated with confidentiality and the name of the participants (teachers and learners) will not be mentioned in the analysis of the data. The participants (teachers and learners) may withdraw from the study at any time.

Signature: _____ Date: 14/10/2009

APPENDIX 9

I_ __ a teacher at

__ ____ school hereby grant consent to Mr. Bailey Haizane Nkuna to be part of his research. The data that will be collected from me and my class should only be used for research purposes and conferences..

The data collected will be treated with confidentiality and the name of the participants (teachers and learners) will not be mentioned in the analysis of the data. The participants (teachers and learners) may withdraw from the study at any time.

Title,Name and surname ..

Signature: George.K Date: 15-10-2009

APPENDIX 10

Recording Consent form for teachers

Please complete, sign and return the form below

Put a tick in the appropriate box

☐ I give consent for being audio taped during the interview

☐ I give consent for audio and video tapes with me in them resulting from this study to be shown at academic conferences, workshops and seminars

☐ I give consent for audio tapes with me in them resulting from this study to be used for purposes of research and publications, teacher-education and teacher-training programmes

☐ I give consent for audio tapes with me in them resulting from this study to be kept for up to three years if necessary

The data collected will be treated with confidentiality and the name of the participants (teachers and learners) will not be mentioned in the analysis of the data. The participants (teachers and learners) may withdraw from the study at any time.

The extra copy of this form is for you to keep.

Thank you.

---------- ----------

Signature of teacher ***Date***

Please print your name

APPENDIX 11

Interview Consent form for teachers

Please complete, sign and return the form below

Put a tick in the box if you are consenting

☐ I am willing to be interviewed for my opinion on the computer simulation lessons

☐ I am willing to be involved in lesson reflection interviews

☐ I give consent for audio recording of these interviews

☐ I give consent for the use of such audio recording of these interviews with me in them for purposes of research, publications, teacher-education and training.

The data collected will be treated with confidentiality and the name of the participants (teachers and learners) will not be mentioned in the analysis of the data. The participants (teachers and learners) may withdraw from the study at any time.

The extra copy of this form is for you to keep.

Thank you.

APPENDIX 12

Interview Consent form for teachers

Please complete, sign and return the form below

Put a tick in the box if you are consenting

☑ I am willing to be interviewed for my opinion on the computer simulation lessons

☑ I am willing to be involved in lesson reflection interviews

☑ I give consent for audio recording of these interviews

☑ I give consent for the use of such audio recording of these interviews with me in them for purposes of research, publications, teacher-education and training.

The data collected will be treated with confidentiality and the name of the participants (teachers and learners) will not be mentioned in the analysis of the data. The participants (teachers and learners) may withdraw from the study at any time.

The extra copy of this form is for you to keep.

Thank you.

Signature of teacher

15-10-2009

Date

***Name** (Please print)..*

APPENDIX 13

Please complete, sign and return the form below

Put a tick in the box if you are consenting

☑ I am willing to be interviewed for my opinion on pedagogical content knowledge.

☑ I am willing to be involved in lesson reflection interviews

☑ I give consent for audio recording of these interviews

☑ I give consent for the use of such audio recording of these interviews with me in them for purposes of research, publications, teacher-education and training.

The data collected will be treated with confidentiality and the name of the participants (teachers and learners) will not be mentioned in the analysis of the data. The participants (teachers and learners) may withdraw from the study at any time.

The extra copy of this form is for you to keep.

Thank you.

George. K — 15-10-2009

Signature of teacher — Date

APPENDIX 14

Letter to parents

Dear parent,

My name is Bailey Nkuna, a part time Master's student at the University of the Witwatersrand, Johannesburg. As part of the requirements for the award of a Master of Science degree in Science Education, I am investigating the impact of Pedagogical Content Knowledge (PCK) in the teaching of Physical Sciences concepts. I will like to seek your consent for your child to be part of my study. The study will involve the teaching of the topic on "Capacitance" to grade 11 Physical Sciences learners. I will collect data by observation of the lessons will be **audio taped**. Participation in this research is voluntary and there will be no victimization whatsoever for refusal to participate.

There will be no interruption of your child's normal school programme, I will follow the normal school timetable and your child will be taught with the use of computer simulation in the computer lab. The data collected will be treated with confidentiality and the name of your child will not be mentioned in the analysis of the data. That is, the name and identity of your child will be protected in this study.

It is hoped that your child will benefit from the research since the simulation is to enhance the learners' understanding of Physics concepts.

Please do not hesitate to contact me if you have any further queries or clarifications to make. My contact details are:

Cell number: 0827708324(cell) e-mail: bailey@penryn.co.za

I look forward to your anticipated positive response.

Yours faithfully,

……..

B.HNkuna

APPENDIX 15

Consent form for students' participation in the study

I,……of……
(school) have read and understood the procedures involved in the study and what is expected of me as a participant. I understand that my name and identity will be protected in the study. I willingly give the following consents:
Please put a tick in the appropriate box

☐ I give consent that I will participate in the study

☐ I give consent for being observed during my Physical Science lessons

☐ I give consent for my Physical Science notebook being checked

☐ I give consent for part(s) of my Physical Science notebook to be photocopied if necessary

The data collected will be treated with confidentiality and the name of the participants (teachers and learners) will not be mentioned in the analysis of the data. The participants (teachers and learners) may withdraw from the study at any time.

The extra copy of this form is for you to keep.

Thank you.

---------- ----------

Signature of student ***Date***

Name *(Please print)*

APPENDIX 16

Consent form for parents

I_____ parent of _____hereby grant consent to Bailey Haizane Nkuna to allow my child to be part of his research. The data that will be collected during teaching in his/her class and should only be used for research purposes and paper presentation at conferences. The data collected will be treated with confidentiality and neither the name of the school, your child or the teacher will be mentioned in the analysis of the data.

The data collected will be treated with confidentiality and the name of the participants (teachers and learners) will not be mentioned in the analysis of the data. The participants (teachers and learners) may withdraw from the study at any time.

Signature: _____ Date: _____

Child's name _____Signature: _____Date: _____

APPENDIX 17

Teacher Interview Schedule

Dear educator

This interview has been designed as part of instruments in a Master's course research looking at the impact of Pedagogical Content Knowledge in the teaching of physical sciences concepts in Grade 11.

Your responses will be strictly confidential and data from this research will be reported only in the research report and paper presentations at conferences. Your information will be recorded and will remain confidential.

Thank you very much for your time and support.

QUESTIONS

1. What assessment standards do you use when teaching the topic on

   "Capacitance"?

2. What kinds of teaching aids you have used in your teaching of this section? Why?
3. How do you structure learning activities when planning for the lesson on "Capacitance"?
4. What are your concerns of teaching the topic on "Capacitance"?
5. How do you think the teaching of "Capacitance" should be improved in your classroom ?

APPENDIX 18

Mr A's responses 16 October 2009

1.	Interviewer	:	Good morning sir. Can you please introduce yourself?
2.	Mr A	:	I am Mr A (school name deleted for confidentiality). I am a Physical Sciences teacher for grade 11.
3.	Interviewer	:	Thank you for honoring this interview. Please note that this interview will be recorded and for confidentiality purposes what will be discussed in this will not be shared with anyone without your consent.
4.	Interviewer	:	I will start with the first question. What assessment standards do you use when teaching the topic on "Capacitance"?
5.	Mr A	:	Assessment standard number 1 is conducting an investigation. Mhh!! Scientific enquiry. Mhh!! then solving problems. Eeh! Communicating and presenting information.
6.	Interviewer	:	Why specifically these assessment standards when teaching the topic on "Capacitance"?
7.	Mr A	:	Ya!!! If you look at the topic "Capacitance". In conducting an investigation you need to know what is inside the capacitor because learners need to know what is inside the capacitor. When you explain that the capacitor contains two metal plates and how these metal plates are put inside the capacitor the learners become curious. Also, when telling them that when the area is increasing the "Capacitance" increases they do not understand. So, they will not have conflict ideas when you tell them how a capacitor looks like and what is inside. To do all these things conducting an investigation is an important part. Another reason is solving problems i.e. how a "Capacitance" of a capacitor is calculated and also how they can design a capacitor. If you want to build or manufacture a capacitor of this much "Capacitance" how much area between the plates and what dielectric they must choose. So this can be achieved by solving problems. Another thing is communication and Scientific arguments.

When you are teaching you are teaching the new technology part. So, how the capacitor is used is important. By communicating and presenting the knowledge the learners are getting more Content Knowledge about the capacitor.

8. Interviewer : Ok Mr A, I will come to my second question. What kind of teaching aids do you use in your teaching of this section and why?
9. Mr A : Yaa!, in this section we use electronic components like capacitor, batteries, LED then circuits and also the main thing we use is computer stimulations. Group learners around so that they see the stimulations. Why we selected this stimulation is because you know, If you take an example if you take how a capacitor charges and discharges. By looking at the stimulation learners can be able to understand how the charges are running through the circuit and thereby getting the capacitor charged. So, they have got more concrete idea than abstract. They will get a real life experience and they will be able to understand.
10. Interviewer : Mr A, I want to get you right. When you mentioned stimulations, are you talking about computer simulations. Am I correct?
11. Mr A : Yaa!, the computer stimulations. It is a flash program. Learners can see through the laptop.
12. Interviewer : Coming to the third question Mr A. How do you structure Learning activities when planning the lesson on “Capacitance”?
13. Mr A : Yaah!! When I plan for the lesson on “Capacitance” for instance, for instance the workshop that you conducted for big ideas helped me a lot. First of all I will now find big ideas about “Capacitance”. For example, one big idea is that a capacitor is an electronic component. So, I ask learners what all electronic equipment they know. They will mention TV (Television) etc. They will figure out on their own that a TV is electronic equipment and a stove is an electric appliance. For each idea, I organize a description in which the learners will come up with their own idea. I then ask them to relate what they know to the big idea so that they come up with the big idea themselves.

Another thing is that in my class I introduced a discussion method of teaching in which I stand up as a facilitator. So, I divide learners into different groups, they have to share ideas among themselves and come up with new ideas. Discussions help them a lot so that they have creative thinking and get the idea much concrete.

14. Interviewer : The fourth question is: What are your concerns in teaching the topic on “Capacitance”?

15. Mr A The main concern when teaching “Capacitance” is the abstractness. Learners are dealing with something they cannot be seen in how in operates in reality. The problem is in our school we do not have an electronic laboratory. So, if we have a laboratory it is easy to for us because learners have to see what a capacitor is, how it works and where it fits in real life. To inculcate these ideas is very difficult unless or otherwise we have a laboratory with computers. Stimulations with overhead projector to show all learners.Learners should experiment or investigate by themselves to be able to get a good idea about these things.

16. Interviewer : How do you think the teaching of “Capacitance” should be improved in a classroom?

17. Mr A : If I can include more activities in my lessons. What I noticed is that you can make a learner more content depth if he starts step by step because each learner will learn more what they see or hear. More experiments, more activities without much instruction from the teacher. I don’t think a teacher should always stand in front of the learners. The teacher should stand as a facilitator to be able to reach a goal with the learners. Another thing is having access to internet. Learners can invent new things if they know where capacitors are used in real life so they can link what they are learning at school to real life situations.

18. Interviewer : Mr A, do you have anything to say?

19. Mr A : This is the first time I am exposed to such interview.

APPENDIX 19

Responses from Ms K 19 October 2009

1.	Interviewer	:	Good morning Ms K. Thank you for accepting my invitation to participate in this interview. Please note that the contents of this interview will be kept confidential.
2.	Ms K	:	Good morning! You are welcome.
3.	Interviewer	:	Starting with the first question. What assessment standards do you use when teaching the topic on “Capacitance”?
4.	Ms K	:	Hm!! The assessment standards that I use are conducting an investigation, gather data to draw conclusion i.e.assessment standard two. Assessment three is solving problems through worksheets. We have learning outcome two, assessment standard one i.e. recalling and discussing the concepts, explaining relationships and conducting the mathematical formula and application of scientific knowledge. I hope this is what you are looking for.
5.	Interviewer	:	Yes, but do you find them helpful in your teaching? Do you think it is worthwhile to go through the assessment standards before the actual teaching in the classroom?
6.	Ms K	:	Yes, I always give worksheets according to assessment standards and learning outcomes.
7.	Interviewer	:	What kinds of teaching aids you have used in teaching this section? Why?
8.	Ms K	:	Ok! I used data projector, capacitor. That is for learners to see what is inside the capacitor, an LED, battery, connecting wires, chalkboard, data sheet for dielectric and learner worksheets.
9.	Interviewer	:	Why?
10.	Ms K	:	I want learners to understand better.
11.	Interviewer	:	Thank you. How do you structure learning activities when planning for the lessons on “Capacitance”?

12. Ms K	:	Learners should be able to draw information step by step. For example. learners should be able to know what is inside a capacitor. In introducing “Capacitance” we must look at the factors affecting the capacitor, the formula regarding “Capacitance” and the application of capacitors.
13. Interviewer	:	Do the activities link one another from lesson to lesson or you come up with activities and not link them to the following lessons?
14. Ms K	:	Eh!! Actually they should be linked one by one. I think they should be linked
15. Interviewer	:	What are your concerns about teaching the topic on “Capacitance”?
16. Ms K	:	Learners should get a clear picture of what is going on in class. Mostly, learner discipline.
17. Interviewer	:	Do you have other concerns you have experienced so far?
18. Ms K	:	There are different types of learners with different learning challenges. Sometimes the lesson take too long and we must finish the topic.
6. Interviewer	:	How do you think the teaching of “Capacitance” should be improved in your classroom ?
19. Ms K	:	Ok. Learners should have freedom to express themselves. The teacher should support them by asking questions and help them answer the questions. Learners must use the chalkboard also. When they work out problems they should write them step by step on the board.
20. Interviewer	:	Can you comment on the teaching materials. Are they not a problem. Do you have enough teaching materials?
21. Ms K	:	I only have enough materials for experiments.
22. Interviewer	:	Would you prefer computer simulations?
23. Ms K	:	These topics are not clear. Computer simulations are key
24. Interviewer	:	Thank you for your time Ms K. Do you have anything to say?
25. Ms K	:	No.

APPENDIX 20

PACE SETTER FROM MPUMALANGA DEPARTMENT OF EDUCATION

MPUMALANGA DEPARTMENT OF EDUCATION

SUGGESTED ASSESSMENT PLAN AND PACESETTER FOR GRADE 11 PHYSICAL SCIENCES - 2009

Continuous Assessment: 25% (100 marks)										
Term 1 (14 January 2009 to 27 March 2009)			Term 2 (15 April 2009 to 26 June 2009)			Term 3 (20 July 2009 to 23 Sept 2009)				Term 4 (5 October 2008 to 12 December 2009)
Jan	Feb	Mar	Apr	May	June	July	Aug	Sept	Oct - Nov	
Grade 11 100 %	Practical Investigation: Physics Weighting: 20 %	Control test: Physics Weighting: 10 %		Practical Investigation: Chemistry Weighting: 20 %	Mid-year Examination: One 2 hour paper for 100 marks Weighting: 20 %	Research Project Weighting: 20 %	Control test: Chemistry and integrated Weighting: 10 %		Final Examination Exam: 75% = 300 marks Paper 1– Physics focus Paper 2 – Chem. focus 150 x 2 = 300 marks	

PACE SETTER GRADE 11 - 2009: LO 1, 2 & 3 are to be attained in the context of the following themes.

1st term: (14 January 2009 to 27 March 2009)										
Weeks	1-2	3-4	5-6	7-8	9-10					
Knowledge area / Topics	(Mechanics) force, momentum and impulse, Newton's laws	Newton's laws, momentum of force, mechanical advantage	(Matter and material) electronic properties of matter, metals, insulators and semi conductors, doping, p-n junction,	Chemical bonds, Lewis diagrams, Multiple bonds, shapes of molecules, VSEPR theory, electro-negativity, oxidation no's	WAVES: SOUND Longitudinal waves sound waves, reflections, refractions, diffraction, interference					
2nd term: (15 April 2009 to 26 June 2009)										
Weeks	11	12-13	14-15	16-17	18-19	20-21				
Knowledge area / Topics	Resonance, ultrasound, Physics of music	Geometrical optics: Reflection and refraction Formation of images by lenses. Applications of lenses: SALT telescope, microscopes	(Chemical change) Quantitative aspects of chemical change, stoichiometric calculations	Energy and chemical change, endothermic and exothermic reactions, activation energy	Kinetic theory of gases, gas laws, temperature and heating, pressure	June exams				
3rd term: (20 July 2009 to 23 Sept 2009)										
Weeks	22- 23	24-25	26	27-28	29-30					
Knowledge area / Topics	(ELECTRICITY AND MAGNETISM) Electrostatics, Coulomb's law, electric field around single and two charges, electrical potential	Capacitance, unit, parallel plate capacitor, capacitor as a circuit device	Electromagnetic induction, Faraday's law, transformers	Ohm's law, series and parallel net works, Wheastone bridge	Acid base and redox reaction, substitution, addition and elimination reaction					
4th term: (5 October 2008 to 12 December 2009)										
Weeks	31-32	33-34	35-36	37-38	39-42					
Knowledge area / Topics	Chemical Systems Mining and mineral processing, Energy resources and their uses Atmospheric chemistry, global warming and the environmental	Revision of all themes	FINAL EXAMS & MARKING	FINAL EXAMS & MARKING	Planning for next year					

APPENDIX 21

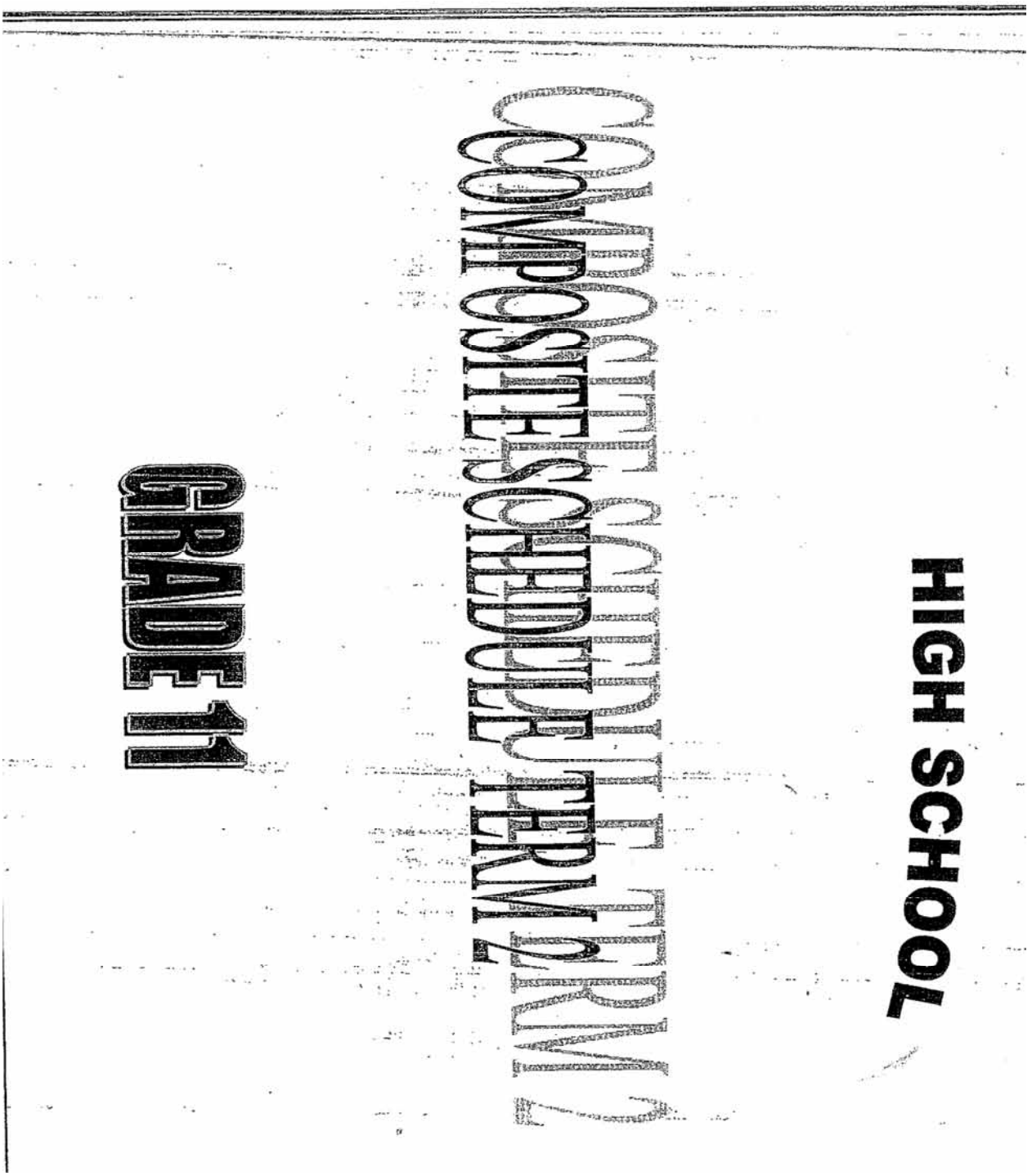
HIGH SCHOOL
COMPOSITE SCHEDULE TERM 2
COMPOSITE SCHEDULE TERM 2
GRADE 11

SCHOOL

SCHEDULE GRADE 11 TERM 2

NO	SURNAME	NAME	SIS	LEVEL	ENG	LEVEL	LO	LEVEL	MAT	LEVEL	M.LIT	LEVEL	L.SC	LEVEL	P.SC	LEVEL	AGR	LEVEL	GEO	LEVEL	AFR	LEVEL	ACC	LEVEL	ECON	LEVEL	B.ST	LEVEL	AVG	P/F
1	BHIYA	THEMBELIHLE	43	3	36	2	54	4			38	2					34	2	39	1	39	2								F
2	CHAUKE	SIFISO	53	4	32	2	49	3			30	2					37	2	36	2	29	1								F
3	CHILEMBE	MPENDULO	57	4	47	3	52	4	05	1													26	1	32	2	42	3		F
4	DLADLA	PRETTY	66	5	54	4	57	4	05	1			34	2	28	1			40	3										F
5	DLADLA	COLILE	62	5	36	2	57	4			36	2	06	1			20	1			31	2								F
6	DLAMINI	CINISO	48	3	30	2	60	5	04	1			45	3	25	1			31	2										F
7	FUYATHA	SAKHILE	69	5	36	2	62	5			34	2					57	2	31	2	32	2								F
8	GAMEDZE	BANELE	43	3	33	2	62	5	04	1													15	1	44	3	29	1		F
9	GININDZA	DAVID	67	5	33	2	54	4			35	2	14	1			31	2			56	4								F
10	HLATHI	PRINCE	56	4	19	1	49	3			36	2					44	3	40	3	38	2								F
11	HLONGWANE	GIVEN	66	5	32	2	44	3	02	1													28	1	39	2	32	2		F
12	KHALIPHAKO	NONHLANHLA	61	5	15	1	28	2			28	1	07	1			35	2			38	2								F
13	KHANYILE	FLORANCE	46	3	22	1	46	3			28	1	07	1			30	2			27	1								F
14	KHOZA	ELVIS	50	4	22	1	57	4	19	1			45	3	41	3			40	3										F
15	KHOZA	LWAZI	52	4	31	2	64	5	05	1			38	2	28	1			45	3										F
16	KHOZA	THEMBA	75	6	32	2	50	4	06	1			48	3	31	2			37	2										F
17	KHOZA	LINAH	74	6	37	2	52	4	07	1			51	4	40	3			51	4										F
18	KHOZA	MISHACK	53	4	26	1	50	4			45	3	10	1			36	2			18	1								F
19	KHOZA	NHLANHLA	62	5	20	1	50	4			25	1	06	1			28	1			30	2								F
20	KHOZA	ZWELI	52	4	36	2	40	3			24	1	07	1			31	2			38	2								F
21	KHOZA	NOKUBONGA	70	6	52	4	55	4			22	1	11	1			44	3			42	3								F
22	KHOZA	ELIZABETH	60	5	46	3	47	3	01	1													33	2	32	2	33	2		F
23	KHOZA	MARTHA	67	5	30	2	A	A	01	1													15	1	36	2	01	1		F
24	KHOZA	JAMES	69	5	48	3	53	5	02	1													19	1	43	3	52	4		F
25	KHOZA	ANDILE	65	5	32	2	60	5			21	1					42	3	27	1	40	3								F
26	KHOZA	NOMSA	89	7	26	1	43	3			26	1					44	3	36	2	33	2								F
27	KHUMALO	SIBUSISO	38	2	14	1	57	4	00	1			43	3	24	1			42	3										F
28	KHUMALO	SKHUMBUZO	47	3	12	1	43	3			30	2	05	1			25	1			27	1								F
29	KUBHAYI	MUMSY	71	6	23	1	49	3			12	1					30	2	19	1	37	2								F
30	LUBISI	GOODMAN	41	3	28	1	40	3			38	2	03	1			19	1			25	1								F

NO	SURNAME	NAME	SIS	LEVEL	ENG	LEVEL	LO	LEVEL	MAT	LEVEL	M.LIT	LEVEL	LSC	LEVEL	P.SC	LEVEL	AGR	LEVEL	GEO	LEVEL	AFR	LEVEL	ACC	LEVEL	ECON	LEVEL	B.ST	LEVEL	AVG	P/F
31	LUBISI	NONHLANLA	54	4	20	1	55	4	00	/													29	1	33	2	26	1		F
32	LUBISI	THOBILE	46	3	39	2	57	4	00	/													25	1	35	2	28	1		F
33	LUBISI	LUTHER	53	4	28	2	55	4	00	/													11	1	30	2	21	1		F
34	LUBISI	THULANE	63	5	42	3	58	4	04	/													30	2	30	2	32	2		F
35	LUBISI	LUCKY	67	5	15	1	48	3			25	/					38	2	35	2	35	2								F
36	MABUNDA	GUGU	60	5	47	3	41	3			13	/					36	2	33	2	40	3								F
37	MABUZA	THEMBISILE	59	4	47	3	61	5	08	/			46	3	33	2			31	2										F
38	MABUZA	MONDAY	53	4	52	4	60	5			14	/					22	1	35	2	36	2								F
39	MABUZA	MXOLISI	48	3	26	1	47	3			33	2					21	1	23	1	31	2								F
40	MADLOPHE	BHEKI	51	4	45	3	65	5			22	/					34	2	33	2	32	2								F
41	MADONSELA	XOLISILE																							13	1				
42	MADONSELA	NELSON	62	5	54	4	49	3			25	/					37	2	30	2	36	2								F
43	MAGAGULA	BETTY	39	2	41	3	59	4	05	/			50	4	24	1			32	2										F
44	MAGAGULA	DOCTOR	53	4	30	2	55	4			33	2	17	1			41	3			29	1								P
45	MAHLALELA	SIPHIWE	66	5	40	3	60	5	07	/			44	3	23	1			40	3										F
46	MAHLALELA	THABO	53	4	21	1	51	4			22	/	09	1			28	2			31	2								P
47	MAHLALELA	MANDISA	49	3	30	2	47	3	02	/													30	2	32	2	33	2		F
48	MAKHANYA	DUDUZILE	50	4	36	2	58	4	02	/													08	1	45	3	32	2		F
49	MAKUKULA	THULISILE																												
50	MALAPANE	JABULILE	59	4	27	1	56	4	00	/													22	1	40	3	39	2		F
51	MALAZA	MANDLA	49	3	26	1	35	2			14	/	11	1			30	2			18	1								F
52	MALULEKA	SELINAH	62	5	32	2	42	3	01	/			/										25	1	33	2	22	1		F
53	MANYIKA	THANDEKA	71	6	25	1	48	3	02	/													26	1	25	1	28	1		F
54	MAPHANGA	NHLANHLA	53	4	52	4	67	5	17	/			46	3	34	2			39	4										F
55	MAPHANGA	TSEPISO	58	4	42	3	57	4			39	2	08	1			51	4			31	2								F
56	MASHEGO	MOSES	72	6	52	4	59	4	11	/			38	2	26	2			43	3										F
57	MASHEGO	NTOKOZO	80	7	77	6	64	5	10	/			61	5	31	4			62	5										P
58	MASHEGO	SENZO	64	5	21	1	49	3			32	2	07	1			35	2			45	3								F
59	MASIA	NTOMBIFUTHI	54	4	26	1	36	2	02	/													23	1	28	1	34	2		F
60	MASINGA	DANSILE	70	6	84	7	51	4	04	/			42	3	22	1	37	2												F

NO	SURNAME	NAME	SIS	LEVEL	ENG	LEVEL	LO	LEVEL	MAT	LEVEL	M.LIT	LEVEL	L.SC	LEVEL	P.SC	LEVEL	AGR	LEVEL	GEO	LEVEL	AFR	LEVEL	ACC	LEVEL	ECON	LEVEL	B.ST	LEVEL	AVG	P/F
61	MATHABELA	CAROLINE	63	5	53	4	66	5			29	1					38	2	36	2	33	2								F
62	MATHE	MUSA	49	3	28	1	38	2	00	1													27	1	22	1	40	3		F
63	MATHEBULA	FIKILE	53	4	56	4	59	4	05	1			60	5	33	2			46	3										F
64	MATHEBULA	NOMTHANDAZO	53	4	10	1	31	2			72	1	05	1			24	1			25	1								F
65	MATHEBULA	ZANELE	54	4	23	1	44	3			40	3					37	2	30	2	34	2								F
66	MATHEBULA	MBONGENI	64	5	35	2	55	4			12	1					16	1	35	2	30	2								F
67	MATSANE	EDWARD	52	4	44	3	65	5	22	1			52	4	47	3			58	4										P
68	MATSANE	NKOSINATHI	56	4	23	1	42	3	04	1													14	1	29	1	25	1		F
69	MATSEBULA	NONKULULEKO	77	6	77	6	72	6	22	1			63	5	57	4			56	4										P
70	MATSEBULA	NOKUTHULA	62	5	50	4	57	4	02	1													28	1	38	2	33	2		F
71	MAWELA	PHETHENI	71	6	53	4	57	4			24	3	15	1			47	3			39	2								F
72	MAZIBUKO	SARAH	72	6	16	1	57	4			19	1	03	1			31	2			34	2								F
73	MDLETJE	THANDEKA	64	5	45	3	45	3	08	1			12	1									26	1	31	2	32	2		F
74	MGWENYA	THANDEKA	71	6	18	1	47	3			13	1					25	1			27	1								F
75	MGWENYA	LINDOKUHLE	79	6	22	1	45	3			13	1					29	2	30	2	31	2								F
76	MHLANGA	HELLEN	72	6	39	2	60	5	00	1			43	3	26	1			23	1										F
77	MHLONGO	PETER	58	4	28	1	63	5			48	3	14	1			41	3			34	2								F
78	MHONI	NKOSINGIPHILE	53	4	23	1	56	4	00	1			38	2	28	1			26	1										F
79	MILAZI	OMAR	83	7	18	1	39	2			35	2	05	1			30	2			37	2								F
80	MILAZI	CEBILE	57	4	18	1	53	4			18	1					33	2	29	1	26	1								F
81	MKASI	THULANI	46	3	18	1	44	3	01	1													25	1	28	1	34	2		F
82	MKHABELA	MANDLA	64	5	41	3	40	3	06	1													35	2	31	2	33	2		F
83	MKHABELA	JOSEPH	74	6	36	2	50	4	05	1													40	3	36	2	39	2		F
84	MKHABELA	THOLLY	45	3	31	2	49	3	05	1													33	2	30	2	42	3		F
85	MKHABELA	THANDIWE	56	4	37	2	35	2			12	1					31	2	18	1	27	1								F
86	MKHATSHWA	NCOBILE	66	5	72	6	62	5			41	3	15	1			28	1			53	4								E
87	MKHATSHWA	SMANGALISO	47	3	60	4	57	4	02	1													31	2	61	5	38	2		F
88	MKHONTO	BUSI	32	2	40	3	39	2			25	1					32	2	22	1	25	1								F
89	MLAMBO	GOODWILL	57	4	61	5	64	5	01	1													29	1	32	2	26	1		F
90	MNDAWE	IVY	67	5	23	1	46	3			25	1					33	2	18	1	29	1								F

NO	SURNAME	NAME	SIS	LEVEL	ENG	LEVEL	LO	LEVEL	MAT	LEVEL	M.LIT	LEVEL	L.SC	LEVEL	P.SC	LEVEL	AGR	LEVEL	GEO	LEVEL	AFR	LEVEL	ACC	LEVEL	ECON	LEVEL	B.ST	LEVEL	AVG	P/F
91	MNDLULI	SONTO	73	6	68	5	62	5	00	1													31	2	47	3	58	4		P
92	MNGUNI	XOLANI	42	3	33	2	57	4	02	1																				F
93	MNISI	PATRIC	59	4	24	1	32	2			28	1	05	1			30	2			22	1	32	2	34	2	32	2		F
94	MNISI	LUNGA	66	5	26	1	43	3	02	1																				F
95	MNISI	KHOSI	52	4	26	1	54	4			24	1											20	1	36	2	30	2		F
96	MNISI	SUSAN	71	6	25	1	33	2			20	1					34	2	25	1	24	1								F
97	MODISE	MAFUMANE	83	7	45	3	63	5	04	1			57	4	36	2	31	2	27	1	30	2								F
98	MOGALE	LULAMA	46	3	35	2	58	4			14	1							57	4										P
99	MOGANE	ANNAH	61	5	29	1	50	4			12	1					22	1	28	1	26	1								F
100	MOHLALA	PRUDENCE	63	5	32	2	53	4	03	1							25	1	17	1	26	1								F
101	MOKOENA	JULIET	74	6	72	6	71	6	13	1			58	4	34	4			63	5			07	1	31	2	22	1		P
102	MOLOTO	HAPPINESS	64	5	37	2	50	4			26	1					37	2	28	1	35	2								F
103	MOLOTO	EPHRAIM	28	1	22	1	39	2			11	1					32	2	21	1	25	1								F
104	MONA	SKHUMBUZO	53	4	26	1	61	5	02	1													19	1	27	1	27	1		F
105	MONDLANE	NHLANHLA	53	4	36	2	52	4	05	1			45	3	23	1			42	3										F
106	MOYANE	MICHAEL	44	3	25	1	59	4	07	1													08	1	39	2	37	2		F
107	MOYANE	PHINDILE	71	6	31	2	67	5			13	1					33	2	32	2	33	2								F
108	MOYANE	VALENCIA	58	4	23	2	39	2			37	2					30	2	24	1	29	1								F
109	MPAPANE	MUSA	54	4	32	2	49	3	02	1			50	4	26	1			32	2										F
110	MZIMBA	THULISILE	45	3	28	1	50	4	04	1													40	3	42	3	34	2		P
111	MZIMBA	MARCIA	60	5	25	1	49	3	03	1													26	1	31	2	28	1		F
112	NDINISA	SIBUSISO	53	4	20	1	55	4			26	1					37	2	25	1	33	2								F
113	NDLOVU	ERNEST	61	5	43	3	66	5	37	3			60	4	52	4			57	4										P
114	NDLOVU	KENNETH	47	3	41	3	52	4	04	1			43	3	24	1			28	1										F
115	NDLOVU	PHINDILE	75	6	40	3	54	4	02	1													31	2	39	2	36	2		F
116	NDLOVU	NKOSANA	73	6	46	3	50	4	02	1													34	2	56	4	60	4		P
117	NDLOVU	ADAM	59	4	40	3	61	5	02	1													29	1	37	2	34	2		P
118	NGCANE	NELLY	62	5	44	3	48	3			14	1					42	3	30	2	33	2								F
119	NGCANE	NELISIWE	55	4	37	2	49	3			14	1					37	2	28	1	30	2								F
120	NGCANE	SABELO	37	2	12	1	38	2			43	3					31	2	22	1	29	1								F

NO	SURNAME	NAME	SIS	LEVEL	ENG	LEVEL	LO	LEVEL	MAT	LEVEL	M.LIT	LEVEL	LSC	LEVEL	PSC	LEVEL	AGR	LEVEL	GEO	LEVEL	AFR	LEVEL	ACC	LEVEL	ECON	LEVEL	B.ST	LEVEL	AVG	PTF
121	NGOMANE	COLLEN	66	5	46	3	60	4	05	1			45	3	17	1			34	2										
122	NGOMANE	PRETTY	78	6	34	2	68	5	07	1			44	3	31	2			28	1										
123	NGOMANE	BAFANA	70	6	37	2	57	4			49	3	17	1			62	5			43	3								
124	NGOMANE	NONDUMISO	69	5	30	2	57	4	00	1													21	1	40	3	23	1		
125	NGOMANE	PRUDENCE	57	4	28	1	47	3			24	1					27	1	27	1	26	1								
126	NGWENYA	KHETHIWE	70	6	33	2	50	4	00	1													07	1	43	3	29	1		
127	NGWENYA	ZANELE	74	6	34	2	58	4	01	1													22	1	32	2	30	2		
128	NGWENYAMA	JACKY	20	1	21	2	43	3			28	1	06	1			32	2			29	1								
129	NHLEKO	PAT	66	5	41	3	59	4	02	1													28	1	32	2	24	1		
130	NKAMBULE	GOODMAN	47	3	27	1	43	3			14	1					25	1	28	1	26	1								
131	NKHAMBULE	NICHOLUS																												
132	NKOSI	SINKIE	71	6	63	5	62	5	10	1			67	5	27	1			52	4										
133	NKOSI	MBALI	63	5	40	3	53	4	14	1			40	3	34	2			33	2										
134	NKOSI	THAPELO	62	5	25	1	51	4			41	3	07	1			35	2			31	2								
135	NKOSI	THEMBA	63	5	44	3	63	5			28	1	06	1			41	3			55	4								
136	NKOSI	VUSI	63	5	22	1	46	3			32	2	07	1			28	1			32	2								
137	NKOSI	NOMSA	64	5	43	3	64	5	02	1													08	1	32	2	30	2		
138	NKOSI	SEBENZILE	74	6	24	1	49	3	03	1													44	3	35	2	28	1		
139	NKOSI	BONGANI	58	4	45	3	48	3	02	1													13	1	40	3	34	2		
140	NKOSI	XOLANI	44	3	38	2	51	4	01	1													19	1	24	1	26	1		
141	NKOSI	THEMBI	53	4	22	1	21	1			13	1					26	1	24	1	24	1								
142	NKOSI	THEMBEKILE	44	3	36	2	80	4			13	1					27	1	19	1	30	2								
143	NKOSI	GODFREY	60	5	30	2	49	3			14	1					31	2	25	1	27	1								
144	NKOSI	SENZO	60	5	33	2	52	4			17	1					32	2	36	2	39	2								
145	NKUNA	CHARITY	49	3	48	3	57	4	05	1			28	1	25	1			21	1										
146	NKWAMBA	PATRIC	71	6	40	3	54	4			45	3	09	1			41	3			30	2								
147	NONYANE	BRIAN	72	6	59	4	60	5	14	1			49	3	32	2			46	3										
148	NTIMBA	TSEPO	65	5	57	4	66	5	03	1			39	2	18	1			46	3										
149	NYALUNGA	SICEBISO	65	5	62	5	65	4	05	1			53	4	31	2			39	2										
150	NYAMBI	NOKUTHULA	80	7	46	3	58	4	01	1													29	1	47	3	46	3		

NO	SURNAME	NAME	SIS	LEVEL	ENG	LEVEL	LO	LEVEL	MAT	LEVEL	M.LIT	LEVEL	L.SC	LEVEL	P.SC	LEVEL	AGR	LEVEL	GEO	LEVEL	AFR	LEVEL	ACC	LEVEL	ECON	LEVEL	B.ST	LEVEL	AVG.	P/F
151	NYAMBI	MELTA	65	5	16	1	34	2			13	1			29	1	22	1	30	2	37	2								
152	NYARENDA	LETRICIA	88	7	39	2	60	6			45	3					59	4	42	3	32	2								
153	NYATHI	XOLILE	36	2	22	1	51	4	01	1													37	2	49	3	40	3		
154	PHELEMBE	THOBILE	77	6	44	3	62	5			48	3	12	1			42	3			42	3								
155	ROUX	CHARLES	50	4	18	1	47	3			12	1					26	1	27	1	36	2								
156	SAMBO	NOMCEBO	76	6	67	5	62	5	05	1													42	3	41	3	44	3		
157	SAMBO	FOSTER	71	6	28	1	60	5	05	1													29	1	30	2	30	2		
158	SAMBO	THANDIWE	61	5	22	1	56	4			11	1					29	1	24	1	31	2								
159	SCHALKWYK	MIETAH	63	5	68	5	56	4	05	1			46	3					36	2										
160	SEDIBE	PROMISE	53	4	24	1	50	4			14	1	07	1			17	1			20	1								
161	SESHULA	SAKHILE	54	4	37	2	50	4	07	1			45	3	38	2			46	3										
162	SHABANGU	DAVID	57	4	29	1	55	4	12	1			43	3	32	2			38	2										
163	SHABANGU	THULI	77	6	54	4	55	4	02	1			50	4	22	1			40	3										
164	SHABANGU	SOLLY	42	3	24	1	42	3			32	2	01	1			30	2			29	1								
165	SHABANGU	WINNIE	51	4	36	2	62	5			11	1	02	1			24	1			11	1								
166	SHABANGU	MPUMELELO	42	3	18	1	38	2			29	1	08	1			30	2			19	1								
167	SHABANGU	FORTUNE	48	3	37	2	53	4	05	1													26	1	34	2	39	2		
168	SHONGWE	THANDI	73	6	33	2	53	4	05	1			46	3	39	2			46	3										
169	SHUNGUBE	KENAN	68	5	39	2	64	5	01	1													26	1	36	2	42	3		
170	SIBANYONI	SIFISO	41	3	13	1	44	3			14	1	05	1			27	1			37	2								
171	SIBANYONI	ELIZABETH	72	6	41	3	48	3			32	2	09	1			39	2			27	1								
172	SIBIYA	ANNITTA	75	6	57	4	49	3	10	1			36	2	32	2			36	2										
173	SIBIYA	THULISILE	41	3	25	1	30	2			22	1					28	1			29	1								
174	SIBIYA	RUTH	42	3	10	1	43	3			25	1	06	1			24	1			17	1								
175	SIBIYA	JULIA	75	6	68	5	68	5	08	1													24	1	36	2	36	2		
176	SIBIYA	NOMFUNDO	74	6	45	3	61	5	02	1													31	2	37	2	38	2		
177	SIBIYA	DAVID	46	3	29	1	44	3	00	1													07	1	20	1	18	1		
178	SIFUNDA	XOLILE	72	6	43	3	63	5	02	1			39	2	27	1			40	3										
179	SILINDA	NICHOLUS	63	5	19	1	54	4	04	1			39	2	26	1			32	2										
180	SILINDA	SONNYBOY	46	3	17	1	40	3			24	1	09	1			30	2			21	1								

NO	SURNAME	NAME	SIS	LEVEL	ENG	LEVEL	LO	LEVEL	MAT	LEVEL	M.LIT	LEVEL	LSC	LEVEL	P.SC	LEVEL	AGR	LEVEL	GEO	LEVEL	AFR	LEVEL	ACC	LEVEL	ECON	LEVEL	B.ST	LEVEL	AVG	P/F
181	SITHOLE	WONDER	47	3	28	1	48	3	05	1			36	2	21	1			24	1										P
182	SITHOLE	GIVEN	60	5	25	1	54	4			29	1	09	1			40	3			22	1								P
183	SITHOLE	NTOMBIFUTHI	69	5	43	3	53	4	02	1													28	1	45	3	44	3		P
184	SITHOLE	NOMTHANDAZO	59	4	19	1	44	3	02	1													20	1	28	1	18	1		P
185	SITHOLE	GUGULETHU	45	3	13	1	40	3			11	1					28	1	24	1	20	1								P
186	SIWELA	NELSIWE	64	5	34	2	57	4	01	1													21	1	43	3	25	1		P
187	SIWELA	SABELO	57	4	43	3	62	5	04	1													27	1	37	2	36	2		P
188	SIWELA	THANDEKA	57	4	23	1	53	4			12	1					27	1	19	1	33	2								P
189	THEMBA	SIBONISO	51	4	41	3	59	4	08	1			41	3	32	2			35	2										P
190	THEMBA	BONGANE	57	4	12	1	41	3			15	1	07	1							23	1								P
191	THEMBA	AARON	55	4	26	1	63	5	05	1													41	3	41	3	35	2		P
192	THOBELA	PRINCE	40	3	17	1	44	3	07	1			40	3	24	1			29	1										P
193	THOBELA	CLARAH	68	5	52	4	62	5	08	1			45	3	38	2			40	3										P
194	THOBELA	ZINHLE	48	3	16	1	40	3	02	1			49	3	31	2			29	1										P
195	THOBELA	SUNNYBOY	58	4	33	2	46	3	04	1													22	1	38	2	25	1		P
196	THOBELA	BONGANE	52	4	12	1	40	3	03	1													28	1	23	1	25	1		P
197	THWALA	PHUMLANI	58	4	20	1	55	4	02	1													10	1	31	2	39	2		P
198	TSOBOLO	THABO	68	5	19	1	49	3			31	2	04	1			56	2			35	2								P
199	TSOBOLO	SIBONGILE	76	6	30	2	50	4	06	1													29	1	31	2	32	2		P
200	VILANE	KHETHUKUTHULA	51	4	44	3	62	5	01	1													23	1	34	2	33	2		P
201	ZULU	WINILE	66	5	39	2	55	4	00	1													09	1	32	2	28	1		P
202	ZULU	LINDELWA	64	5	34	2	55	4			12	1					31	2	25	1	36	2								P
203	ZWANE	SWENKIE	32	2	18	1	29	1			26	1	06	1			28	1			22	1								P
204	ZWANE	GIFT	42	3	33	2	46	3			23	1					31	2	35	2	29	1								P
TOTAL:																														
AVERAGE %:																				285										
NUMBER WROTR:																				329										
NUMBER PASSED:																				90										
																				51										

NUMBER FAILED:																									
% PASSED:																									
% FAILED:																									

SIGNATURE OF GRADE HEAD

SIGNATURE OF PRINCIPAL

SIGNATURE OF CIRCUIT MANAGER

MPUMALANGA DEPT. OF EDUCATION
HIGH SCHOOL
EHLANZENI REGION
SCHOOL STAMP
2009 -07- 28
PO BOX 3403 1245
OFFICE OF THE HEADMASTER

DATE

27. 07. 2009.
DATE

DATE

APPENDIX 22



dary School
e 1214
1409
isa.net
EMIS : 60001 5883

2009 GRADE 11 RESULTS FOR FIRST -THIRD TERM

NAMES CANDIDATE		MATHS 1ST TERM					P.SCIENCES 1ST TERM					MATHS 2ND TERM					P.SCIENCES 2ND TERM				
		100	100	200	100	7	100	100	200	100	7	100	100	200	100	7	100	100	200	100	7
Bembe	Buyisile Samanta	7	1	8	4	1		32	32	16	1	63	22	85	43	3	3	68	71	36	2
Chuma	Bella Adolin	40	80	120	60	5	50	43	93	47	3	77	46	123	62	5	80	92	172	86	7
Khoza	Dawn Given	27	0	27	14	1	36	38	74	37	2	47	34	81	41	3	63	64	127	64	5
Khoza	Siphelile Elizabeth	30	0	30	15	1	20	26	46	23	1	58	28	86	43	3	4	72	76	38	2
Lekhuleni	Nontobeko Millicent	40	5	45	23	1	20	40	60	30	2	71	48	119	60	4	74	56	130	65	5
Lekhuleni	Xenia Nothando	43	0	43	22	1	13	32	45	23	1	32	34	66	33	2	4	72	76	38	2
Lekhuleni	Zinhle Happiness	30	5	35	18	1	10	25	35	18	1	53	34	87	44	3	4	68	72	36	2
Lubisi	Bonginkosi	47	5	52	26	1	23	26	49	25	1	61	32	93	47	3	7	48	55	28	1
Macamo	Paul Ndabeni	13	0	13	7	1	20	15	35	18	1	45	24	69	35	2	77	68	145	73	6
Madonsela	Willie	17		17	9	1	47	25	72	36	2	68	42	110	55	4	57	80	137	69	5
Magagula	Prudence	3	0	3	2	1		30	30	15	1	47	16	63	32	2	74	48	122	61	5
Mahlalela	Zanele Prudence	13	0	13	7	1	26	15	41	21	1	45	22	67	34	2	86	92	178	89	7
Manyisa	Nonhlanhla Patience	40	35	75	38	2	16	23	39	20	1	53	34	87	44	3	60	60	120	60	5
Maphanga	Nompumelelo Shirley	27	0	27	14	1	6	24	30	15	1	34	38	72	36	2	77	72	149	75	6
Masango	Sandile Belton	0	0	0			16	20	36	18	1	32	26	58	29	1	60	52	112	56	4
Mashaba	Thabo Gerald	23	0	23	12	1	16	25	41	21	1	58	16	74	37	2	69	76	145	73	6
Mashaba	Charles Mduduzi	2	5	7	4	1	25	30	55	28	1	42	40	82	41	3	7	80	87	44	3
Mashabane	Andries	90	100	190	95	7	43	35	78	39	2	77	42	119	60	4	7	96	103	52	4
Masinga	Samuel Sifiso	80	70	150	75	6	10	20	30	15	1	61	42	103	52	4	49	68	117	59	4
Massingue	Philisile	33	0	33	17	1	10	14	24	12	1	32	36	68	34	2	7	4	11	6	1
Mathebula	Lindokuhle Patrick	23	5	28	14	1	10	20	30	15	1	61	40	101	51	4	8	60	68	34	2
Mathebula	Prudence Millicent	23	50	73	37	2	20	30	50	25	1	61	40	101	51	4	8	88	96	48	3
Mdluli	Hlengiwe	40	90	130	65	5	50	43	93	47	3	95	86	181	91	7	89	96	185	93	7
Mgwenya	Nonkululeko	7	0	7	4	1	13	22	35	18	1	56	52	108	54	4	71	96	167	84	7
Ngwenya	Nokulunga	33	40	73	37	2	33	30	63	32	2	82	56	138	69	5	91	100	191	96	7
Mhlanga	Jabu Emmanuel	47	55	102	51	4	43	25	68	34	2	85	54	139	70	5	3	100	103	52	4
Mkhabela	Desmond	23	15	38	19	1	43	48	91	46	3	61	64	125	63	5	5	80	85	43	3
Ngomane	Johan	2	0	2	1	1	53	20	73	37	2	34	30	64	32	2	1	92	93	47	3

NAMES CANDIDATE		MATHS 1ST TERM					P.SCIENCES 1ST TERM					MATHS 2ND TERM					P.SCIENCES 2ND TERM				
		100	100	200	100	7	100	100	200	100	7	100	100	200	100	7	100	100	200	100	7
Mdlalose	Eunice	13	0	13	7	1	27	50	77	39	2	45	22	67	34	2	42	46	88	44	3
Milazi	Ishmael	17	20	37	19	1		50	50	25	1	60	36	96	48	3	84	66	150	75	6
Mkhonto	Themba	13	15	28	14	1	33	75	108	54	4	75	36	111	56	4	38	89	127	64	5
Mndawe	Nothando	13	15	28	14	1	20	20	40	20	1	30	24	54	27	1	60	69	129	65	5
Mndebele	Nosicelo	10	0	10	5	1	27	30	57	29	1	70	40	110	55	4	76	20	96	48	3
Mnisi	Millicent	37	100	137	69	5	13	25	38	19	1	30	24	54	27	1	44	63	107	54	4
Mnisi	Nonhlanhla	13	30	43	22	1	47	35	82	41	3	15	22	37	19	1	58	49	107	54	4
Mokoena	Given	37	25	62	31	2	7	100	107	54	4	55	22	77	39	2	88	60	148	74	6
Mothobedi	Tebogo	10	25	35	18	1	47	10	57	29	1	50	28	78	39	2	56	40	96	48	3
Ndimande	Delisile	30	10	40	20	1	40	65	105	53	4	55	28	83	42	3	40	43	83	42	3
Ngomane	Gcina	40	0	40	20	1	40	35	75	38	2	70	38	108	54	4	48	37	85	43	3
Nyalunga	Bonginkosi	13	10	23	12	1	27	45	72	36	2	35	18	53	27	1	54	26	80	40	3
Nyalunga	Thulasizwe	47	30	77	39	2	53	60	113	57	4	10	25	35	18	1	40	57	97	49	3
Nyathi	Portia	40	0	40	20	1	27	50	77	39	2	30	10	40	20	1	82	51	133	67	5
Silinda	Ruth	27	5	32	16	1	33	55	88	44	3	40	0	40	20	1	68	40	108	54	4
Sithubi	Themba	13	10	23	12	1	47	35	82	41	3	47	35	82	41	3	44	91	135	68	5
Thabethe	Sindile	7	5	12	6	1	13	30	43	22	1	13	30	43	22	1	40	63	103	52	4
Themba	Sandile	7	10	17	9	1	73	20	93	47	3	73	20	93	47	3	58		58	29	1
Thobela	Bonginkosi	40	40	80	40	3	73	5	78	39	2	40	63	103	52	4	58	57	115	58	4
Thobela	Sihle	20	10	30	15	1	53	40	93	47	3	58		58	29	1	60	54	114	57	4
Zulu	Bongumusa	33	25	58	29	1	50	35	85	43	3	58	57	115	58	4	68	89	157	79	6
Zulu	Wandile	37	55	92	46	3	73	40	113	57	4	34	54	88	44	3	58	49	107	54	4

SIGNATURE :.....

APPENDIX 23

Observation schedule on the teaching of lessons in the classrooms

Prompts	***Observation notes***
Big Science ideas/concepts	
What ways you intend the learners to learn about this idea?	
Why it is important for learners to know this?	
What else you might know about this idea(that you don't intend learners to know yet)?	
Difficulties/limitations connected with teaching this idea	
Knowledge about learners thinking which influence the teachers' teaching of this idea	
Other factors that influence the teaching of the idea	
Teaching Procedure	
Specific ways of ascertaining learners' understanding	

APPENDIX 24

TRANSCRIPTS OF MR A LESSONS

Lesson 1

Mr A	:	Good afternoon class
Class	:	Good afternoon sir
Mr A	:	Before we start our lesson, I want you to group yourself into groups of five. Two groups will have six people. Can you group yourself quickly? (the waited for 5 minutes). Ok! In your groups, I want you to think of 5 electronic equipment or appliances that you are using in your daily lives. I will give you three minutes.
Learner 1	:	Radio
Mr A	:	mmh!! Another one.
Learner 2	:	TV
Mr A	:	Good. Another one.
Learner 3	:	Kettle.
Mr A	:	What are the components of a TV?
Learner 4	:	Remote.
Learner 5	:	Speakers.
Mr A	:	Speakers are not found on the motherboard
Learner 6	:	Screen.
Mr A	:	There are lots of components of a TV. Did you see themotherboard? Can you write what you see when you look on a mother board of a computer? I give you seven minutes.
Mr A	:	Let us hear your responses.
Learner 1	:	Diodes
Learner 7	:	Microchip
Learner 8	:	Capacitor

Mr A	:	Let us consider the capacitor. What is a capacitor?. Talk to your friends in your group
Mr A	:	Ok. Let us hear!
Learner 8	:	A capacitor is a space which a capacitor has for storage.
Mr A	:	Any other explanation. Do you know a rubber band?
Class	:	Yes.
Mr A	:	A rubber band has the capacity to stretch. Today, we are going to study the component of a motherboards i.e. the capacitor. Can you further explain what capacity means?
Learner 14	:	Space
Mr A	:	The capacitor has capacity. Which means it has storage.. The capacitor can store charge and discharge. I want you to go look for a capacitor for tomorrow's lesson. Is it possible for you to bring a capacitor tomorrow?
Learner 18	:	I will be difficult sir. There is no broken electronic equipment at home
Class	:	Yes sir. She is right!
Mr A	:	I want you to go and try look for it. Talk to the people who fix electronic appliances in your neighbourhood.

Lesson 2

Mr A	:	Good afternoon class
Class	:	Afternoon sir
Mr A	:	Yesterday we have briefly learned about a capacitor. What is a capacitor?(Discuss in your groups)
Mr A	:	Let me hear you responses
Learner 8	:	The capacitor is an electric component that an store charge
Learner 9	:	The capacitor is a component that can store charge
Mr A	:	Thank you for your responses. I want you to write the following

		definition. A capacitor is an electronic component that stores electric potential. Let us also look at this way. When you eat something for example when you eat chicken it means you have the capacity to eat chicken. Is it?
Class	:	Yes
Mr A	:	Let us look at him(point to on learners in class). He has the capacity to play football as we know. As a soccer play he can have the capacity to play soccer for five hours. Coming to capacitors, a capacitor can store electrical charge according to its capacity.This means the capacitor has “Capacitance”. Can you explain “Capacitance”? Discuss in your groups.
Learners 16	:	“Capacitance” is …..(learner scratching his head)
Mr A	:	Yes, you can do it man. “Capacitance” is ..
Learner 16 charge	:	“Capacitance” is how much an electric component can store
Mr A	:	What do the other think?
Learner 15 electric	:	“Capacitance” is how much an electric component can store
		charge
Mr A	:	In fact “Capacitance” is the amount of charge divide by the potential difference across it. “Capacitance” is measured in farads. Yesterday I asked you to bring along the capacitor for today’s lesson. Did any of you brought a capacitor?
Learner 16	:	I could not find it
Mr A	:	Who has managed to bring it?
Class	:	Quite
Mr A	:	If you want to understand a capacitor better. What would you do?
Learner 28	:	You must have one.
Mr A	:	After having one. What would you do?
Learner 21	:	You should open it
Mr A	:	Yes, you should open it. Do you want to open it and see what is
		inside?

Class	:	Yes sir!
Mr A	:	I am going to give each group a container with capacitors in it. Take the big capacitor and use the cutter to open so you can see what is inside. Do not put in your mouth or use your mouth to cut ok! Once you have opened it, I want one person from each group to tell us what is inside.(the teacher gave them 6 minutes to do this activity)
Mr A	:	Ok . We will start with group 1. What do you see?
Learner 19	:	Ooh!! I see something plastic like. There are also plates inside
Mr A	:	What else did you find? (*the teacher looked at the other groups that have not yet responded*).
Learner 11	:	There is a cord like material and a wire
Learner 15	:	My group got this (learner taking out the dielectric material out). It is like a cotton.
Mr A	:	What do you call that?
Learner 15	:	Aluminium
Mr A	:	Ok. If I ask you what is inside a capacitor, what would you tell me?
Learner 17	:	Metal plates
Mr A	:	How many metal plates?
Learner 16	:	Two
Mr A	:	Two metal plates is it. What is between the two metal plates?
Learner 24	:	There is a plate and a paper.
Mr A	:	Plate and a paper.ok! What is the difference between the plate and the paper. What is the name of the paper that cannot pass electricity?
Learner 18	:	Insulator
Mr A	:	Insulator, Is it? So, you are telling me that there are two metal plates protected by an insulator. The name of the insulator is called dielectric. So, electricity cannot pass through the insulator. I f you look at the whole material that is put inside the tube. Can you say what it looks like?

Learner 19	:	Cheese roll
Mr A	:	It is like a cheese roll
Class	:	Burst into laughter
Mr A	:	What is the difference between the capacities of this big capacitor and the small capacitor?
Learner 22	:	The big has big capacity and smaller one has small capacity.
Mr A	:	What else can you say?
Learner 20	:	The area is not the same.
Mr A	:	The big one has a bigger area and it has a bigger “Capacitance”. The small has a small area and has small “Capacitance”. Look at the metal plates. Are they closer to each other or far away from each other
Learner 24	:	They are close to each other
Mr A	:	So, they close to each other. Another factor in the working of a capacitor is?
Learner 26	:	Distance
Mr A	:	The small distance increases the “Capacitance”. Another factor is the dielectric in it. There are different types of dielectric for example, air. In fact there are three factors that affect the “Capacitance” of a capacitor. You told me that the area of a capacitor affect its “Capacitance”. Consider a stadium with spectators. If the stadium is big it can take a lot of spectators. So, capacitors operate the same way. If the area is big, the capacity becomes big and the “Capacitance” is big also. How is it connected?
Learner 20	:	It can be connected in parallel
Mr A	:	So, tell me. What have you learned today?
Learner 29	:	There are two plates in a capacitor. One is positive and the other is negative(he explained what happens when a capacitor is connected to battery).
Learner 2	:	There is an insulator called dielectric found between the plates of a capacitor

Learner 10 : When the area of a capacitor is big the “Capacitance” will be large

Mr A : I want you to write the following questions down. 1. Explain what is “Capacitance”. 2. Explain how the area and the distance between the plates of a capacitor affect “Capacitance”.

Lesson 3

Mr A : Good morning class

Class : Good morning sir

Mr A : How are you?

Class : Fine thanks and how are you sir?

Mr A : I am also fine. I will give you two minutes to recall what we have done in the previous lesson(Learner discussed in their respective groups). What did you learn in the last lesson? Can you please answer me!!?

Learner 1 : Inside the plates of a capacitor, there is a dielectric. When the capacitor is connected to a battery, there are molecules which contain both negative and positive.

Mr A : These molecules are charged ok!. How are the molecules charged?

Learner 1 : The positive terminal of the capacitor will attract negative charges and the negative terminal attract positive charges.

Mr A So, we can say the capacitor gets charged and then the molecules between the plates of the capacitors get polarized. When the molecules get polarized what develops in them?

Learner 2 : Electric field

Mr A : So, an electric field develops inside the dielectric and the electric field opposes the field between the plates. Great!. Today you are going to see how a capacitor charges and how it discharges

Class	:	Ok!
Mr A	:	You are going to use laptops to be able to see that(the teacher gave each group a lap top). Open my documents and you will see a file named multimedia. Are you seeing that one?
Class	:	Yes.
Mr A	:	Go to Physics, then look for a topic on capacitors and “Capacitance”. Open the diagram and click on the simulation for charging a capacitor. What are the white boxes in the diagram?
Class	:	Plates
Mr A	:	Plates of a capacitor. It is connected by wires. Is it?
Class	:	What are the other components? The capacitor, the wires, then?
Class	:	Batteries
Mr A	:	Batteries. Then?
Class	:	Switch
Mr A	:	Move the cursor and click on the switch. What do you notice.
Class	:	It moves!!
Mr A	:	What moves? Charges is it?. When the charges are moving, what happens to the plates?
Learner 13	:	The plates get charged.
Mr A	:	Are they both charged with the same charge?
Learner 14	:	No, one is positively charged and the other is negatively charged.
Mr A	:	What happens now?
Class	:	Moving slowly!, moving slowly!
Mr A	:	Moving slowly! All of a sudden it stops. Why do the charges stop?

Learner 14	:	The plates are now fully charged.
Mr A	:	Now we can say the capacitor is fully charged. Take the cursor and move to discharge. Just click on discharge. What happens?
Class	:	There are no more charges.
Mr A	:	There are no more charges ok. Is the discharge process is very quick or very slow when compared to the charging process?
Class	:	Quick
Mr A	:	Very quick, is it? You saw that when the capacitors is charging it took some time and when it discharges it is quick. You can repeat the process and see what happens. Now I am going to ask you to explain to me the charging and discharging of a capacitor. Can you explain to me by looking at the capacitor simulation. How capacitor gets charged and how it discharges.
Learner 12	:	The capacitor is connected between the two plates to a battery. The positive terminal of the battery transfers positive charges to the one side of the capacitor and the negative terminal of the battery transfers negative charges to the other side of the capacitor. The charging process only takes place when the switch is open. When it is closed the discharging process takes place.
Mr A	:	Did you say charging takes place when the switch is closed?
Learner 12	:	Ohoo! When the switch is closed the charges, Yaah! The capacitor gets charged, then it is fully charged. Then the C.. kambe yini?(SiSwati phrase which say what do we call it?) the charger stops. That means the capacitor is fully charged. Then when you discharge the capacitor, the switch must be opened.
Mr A	:	The discharge process is quicker than the charging process. When you use a camera at night, you need a flashlight is it? I am sure you have seen that the camera flash is very bright when

switched on. Can you tell whether it lights up for a very long time or very short time?

Class : Short time

Mr A : Very short time is it? When you take a photo the flash will

appear for a short while. I f you click the camera immediately, it will not work ok! Did any of you noticed that?

Class : silent

Mr A : When you take a photo, you click the button of the camera is it?

When you click immediately afterwards, the click will come but there will not be any flash. When you click again after five or six seconds the flash will come again. Do you get it now?

Class : Yes

Mr A : Can you tell me why does that happen?. Discuss in your groups.

Mr A : Let me hear your response>

Learner 13 : When you click a camera the camera flash will work because

charges are charged at that time. When you click immediately, the flash will not work because the charges are taking time to charge.

Mr A : What will charge?

Learner 13 : The “Capacitance”. When you click the camera for the third time,

the camera flash will work because the charges are fully charged by that time.

Mr A : The charges are accumulated by the capacitor. When you click the camera button , the capacitor discharges hence the camera flashes. I will draw on the board the graph which shows the discharging process of a capacitor.(the teacher took 4 minutes

explaining the graph). Now, tell tell me what you have learners today.

Learner 14 : I have learned that a capacitor is charged whereby a capacitor, how can I put it? Eh!!

Mr A : Put it in your own words. Simple, simple words.

Learner 14 : Ok., today we have learned about how a capacitors gets charged and that it takes time for a capacitor to charge. It takes more time to charge and then less time to charge.

Mr A : Yes, Initially the charging rate is high.

Learners 14 : When the charges are about to fully charged they move slowly but the discharging process is quick.

Mr A : We have come to the end of the lesson. I will see you in the next class.

Lesson 4

Mr A : How are you learners?

Class : Fine sir and how are you?

Mr A : Fine.

Mr A : Yesterday we learned about the process of charging and discharging a capacitor, is it?

Class : Yes

Mr A : You were able to see through a computer simulation how a capacitor charges and how it discharges. Now tell me the difference between charging and discharging a capacitor?

Learner 1 : During the charging process the capacitor quickly gets charged. When it

is about to be fully charged, the charges move in slowly. The capacitor discharges quickly.

Mr A : If a capacitor is charged, it charges very quickly then go slowly but the discharging process is quick. Yesterday I gave you an example that flashes. What is that example?

Learner 19 : Camera flash

Mr A : Camera flash, ok! How does a camera flash work?

Learner 14 : When you take a photo more especially at night, the camera will flash.

This happens because the capacitor of the flash is fully charges due to its connection to the battery. When flashes it discharges the charge in it.

Mr A : Good. Did you see an alarm system? How does it work?

Class : Silent

Mr A : Ok, let us come with a practical example. I will connect a battery, a switch, rheostat and a light bulb. I will take some time explaining how the alarm work since you said you do not know (he demonstrated and discussed how the alarm system works)

Mr A : Capacitors can be connected in series or parallel by using the following equations. $\frac{1}{C} = \frac{1}{C1} + \frac{1}{C2} + \frac{1}{C3}(series)\ and\ C = C1 + C2 + C3$ (parallel).Capacitors connected in series will have a lower total "Capacitance" than any single one in the circuit.

$$C_{total} = \frac{1}{\frac{1}{C_1} + \frac{1}{C_2} + \frac{1}{C_3}}$$

If you have only two capacitors in series, this equation can be

$$C = \frac{C_1 C_2}{C_1 + C_2}$$

If you have two identical capacitors in series, this is further simplified to

$$C_{total} = \frac{1}{2} C$$

APPENDIX 25

TRANSCRIPTS OF MS K LESSONS

Lesson 1

Ms K : How are you doing today?

Class : Fine ma'm (singing in chorus)

Ms K : Today we will learn about capacitors. I am sure you may have seen devices such as radio and computer. Who can tell me what is a capacitor?

Learner (first row) : A capacitor is an electron device which stores electric charge

Ms K : Correct! A capacitor is an electronic device which stores electric charge. It consists of two plates without touching. Let me draw a diagram.(She drew a diagram representing the symbol of a capacitor) .

As you can see, the two plates do not touch each other. They store electrical charges. We will discuss this section later. When a photo is take at night, usually there is a flash coming out. The operation of a camera flash is because of capacitors. We will also discuss this later. Now, let us go into detail about capacitors. If the area of the capacitor enlarges, the "Capacitance" will be large. Who can tell me what is the space between the plates of the capacitor for? Why is there a gap between them?

Learner(2nd row) : To store charges ma'm

Ms K : Yes to store charges. The capacitor is an insulator. We have many types of capacitors. Make sure that when you check a capacitor between the plates you should see an insulating

material. The gap is called a dielectric. What is the gap between the two plates of a capacitor called?

Class : It is a dielectric(responding in chorus)

Ms K : We can compare the capacitor to a cell or battery. In a cell there is negative and positive. In a capacitor, one side is negative and the other side is positive. When a capacitor is connected, the charge can overlap over the gap. What is in the gap of a capacitor is air. Let me introduce another term. What is “Capacitance”.

Learner(last row) : “Capacitance” is a measure of the ability of a capacitor to store

Charge

Ms K : Who has a different answer. Yes, she is correct. “Capacitance” is the measure of the ability of a capacitor to store charge.(Ms K then derived the formula fo “Capacitance” on the board. She also explained units such microfarad and picofarad, A worksheet with questions on “Capacitance” was given.)

Lesson 2

Ms K : Good morning class

Class : Good morning ma’m.

Ms K : In our last lesson we discussed the capacitor and we have also derived what formula is used to calculate “Capacitance”/ Who can tell what is the formula for “Capacitance”?

Class : C =..

Ms K : What is C? (pointing to a learner in row 3)

Learner(row 3) : The formula for “Capacitance” is C = $\frac{Q}{V}$

Ms K : Correct. The capacitor depends on certain factors and we will discuss the factors one by one. When we look into the formula, the first one is the area of the plates of the capacitor. What will happen with the capacitor? We need to look if the area has anything to do with the “Capacitance” of the capacitor.. Let us have the two plates.(she drew the following diagrams representing two capacitors on the chalkboard).Look at the area of the pate. The larger area increases “Capacitance”. Can say which capacitor has less “Capacitance” and which has more “Capacitance”? Is it 1 or 2. Remember, the area of the plate influences the “Capacitance”.

Learner (row 3) : Figure 2 has a larger “Capacitance”. The area is larger than that of figure 1. Let’s use direct proportionality. The area is directly proportional to the “Capacitance” of a capacitor.

Ms K : Good. C α A. When we decrease the area, let us see what will happen.Let us look at the distance between the plates. What is the gap called?

Learner(row1) : Dielectric

Ms K : What happens in a capacitor is that the plates get charged. The more charges they are close the gap. It means that the smaller the distance, the greater the “Capacitance”. Figure 2 has a smaller “Capacitance” when relating “Capacitance” to distance because the distance between the plates is large. Thus, $C \alpha \frac{1}{d}$; $C = \frac{Ak}{d}$; $C = k\frac{A}{d}$ $\varepsilon_{O.}$ k = 1 if the dielectric constant is air. Therefore $C = \frac{A}{d}$ ε_O , and $\varepsilon_{O=}8.85\ 10^{-12}C^2/N.m^2$. ε_O stands for permeativity. Permeativity means allow charges to move. If the permeativity constant is very low it means the dielectric is a good insulator.

Lesson 3

Ms K : Good day class

Class : Good day ma'm

Ms K : Today I want to show you how a capacitor works. I also want to show you what is inside a capacitor. In our second activity, we will cut a capacitor open. Using this computer I will show you how a capacitor works. I want all of you to look at the screen and observe what happens. When I click at the bottom, see how the charges flow. Let us look at how the capacitor charges and discharges. Once again, you see when the witch is open and when it is closed. Look at the voltmeter reading and the ammeter reading. Now we are going to cut the capacitor to see what is inside it. I need someone who will help me cut.

Learner(2nd row): I will come help you ma'm

Ms K. : Thank you. While he is coming to the front, I will circulate this container. Look for a capacitor, don't put in your mouth ok! After looking at it pass the container to the friend next to you. I will circulate another container from this side also.

Learner (2nd row): I have finished ma'm

Ms K : Thank you. As you can see (she showed the cut capacitor from the front) there are two plates coming from the inside of a capacitor. Let us talk about the two plates. They are both separated by papers. Some capacitors have air instead of paper. The paper is an insulator. Each plate is connected to a terminal. I am sure you are all aware of what is inside a capacitor. Please take out your worksheets and let's do corrections.

Lesson 4

Ms K : Good afternoon class

Class : Afternoon ma'm

Ms K : Let us quickly finish the questions we were doing yesterday. Who would like to come do the first question for us?

Learner(1st row)	:	I would like to explain the first one(dashed for a chalk and started explaining)
Ms K	:	Is the answer correct?
Class	:	Yes ma'm(singing in chorus)
Ms K	:	Who would like to do the second problem ?
Learners(row 4)	:	I am next ma'm(he explained the problem but did not do it correctly)
Ms K	:	There is something wrong with formula for "Capacitance". Can you see it class?
Class	:	Yes ..(some said yes and some said no. Ms K continued doing corrections on the remaining questions).

Ms K That is all about the calculations side. I want to discuss the application of a capacitor in camera flash. As we know that the capacitor stores charges. After charging it can discharge very quickly. Discharging means the capacitor releases the charges ok! So, when you take a photo you will notice that after clicking the camera button the flash come on your face. Actually, the reason why the camera flashes is because the capacitor inside the camera discharges. It takes some time to charge but discharge quickly. It discharges in the form of a light bulb.

Next time you see a camera, you must think of the capacitor that can store charge. Capacitors are also used in radios, computers etc. Any electronic device can take up to a certain voltage. If the voltage goes beyond what the equipment can handle the equipment will be damaged. What is the role of the capacitor here? It can store extra charge which is healthy to the electronic device. It can protect the electronic device by storing extra charge that can destroy the equipment. After that the capacitor can safely discharge the absorbed charge. Capacitors are also used in keys of computers. So, this is the picture of a key addressing letter

		A(She pasted a picture of letter A of a computer on the board). The computer is attached to a capacitor that has two plates as you know. Between the two plates is the dielectric. The upper plate of the key is movable while the lower plate is fixed. If I press the top plate(letter A). What happens to the plate?(She asked the question while pressing the key of a laptop.
Class	:	It will go down
Ms K	:	When it goes down it means the distance between the plates decreases. What happens to the "Capacitance"?
Class	:	Increases(chorus)
Ms K	:	Remember distance and "Capacitance" are inversely proportional to each other. All computer keys have different "Capacitance". That is why we are able to type. These are the applications of capacitors everyday situations. Are there any questions?
Class	:	No ma'm
Ms K	:	I am now going to give you a class work. 1. Can you write any application of a capacitor other than the ones discussed in this lesson? (She gave them two minutes to work on this activity). Anybody who has the answer?
Learner(back row)	:	TV
Ms K	:	Correct! Anybody with a different answer?
Learner(2nd row)	:	Cell phone.
Learner(3rd row)	:	Calculator
Ms K	:	Ok!
Learner(1st row)	:	Fridge
Ms K	:	I don't think so!
Learner(1st row)	:	Capacitors are used in operating radios.

Ms K : Correct ! Capacitors are used in different devices which we all know. We do not use capacitors in fridges. Maybe the latest fridges that have improved technology in them. I don't know but the normal old fridges that we know do not have capacitors in them. To conclude the lesson, capacitors are used in different electronic devices. You have mentioned some of them. The flashing of a camera is one practical use of a capacitor. The capacitor takes some time to charge but discharges quickly. As I have mentioned, the capacitors are used in the functioning of a computer. You have seen the simulation on how a capacitor functions. I want you to starting thinking of a project that you can make using capacitors. I will need each one of you to come up with ideas on how you can make your project work. See you in the next lesson.

CoRe used during the workshop for the teacher participants

CoRe Electric Current

BIG IDEA	To obtain an electric current, there needs to be a conducting wire from one terminal of the battery to the other	An electric current is a flow of charge in one direction. The material that make up the circuit provide the charged particles that flow when there is an electric current	A battery provides the energy for an electric current	The brightness of a globe depends on the rate at which energy is being transferred to the light globe
1. What do you intend the learners to learn about this idea?	A circuit contains the source of energy and something that needs the energy to work.	Most substances contain charged particles. In some substances charged particles can be moved in one direction to create current. A flow of negatively charged particles in one direction is equivalent to the flow of positively charged particles in the opposite direction	Regardless of the current, the battery always provides the same amount of potential energy per unit charge flowing through the battery	When there is current in the filament of light globe, it may be very hot because it has a high resistance. The hotter the globe filament the greater the brightness, and the faster the time rate of energy transfer to the filament
2. Why is it important for learners to know this?	This is an essential pre requisite for understanding scientific models of electric circuits	Understanding scientific meaning of electric current is key for making sense of models that scientists use to explain electric circuits	Understanding the role of the battery in a circuit as a provider of a fixed amount of energy per coulomb is essential for predicting and explaining circuit behaviour	Thinking about the brightness of the globe may assist students to understand that energy is "used up" in a circuit, not current.

3. What else you might know about this idea(that you don't intend learners to know yet)	Charge can jump across a gap if the energy per unit charge provided by the battery is high enough. There can also be energy in non continuous circuits e.g circuits with capacitors	The flow of charge involves the interaction between charged particles in the circuit Current in a wire is proportional to the average drift velocity of moveable charged particles.	Internal resistance of the battery The chemical reactions in the battery Why a battery provides a fixed amount of energy per coulomb and why this depends on the chemical it contains	The resistance of the light globe increases with temperature The power loss in a globe is the product of the potential difference across the globe and the current in the globe
4. Difficulties /limitations connected with teaching this idea	We are talking about something that cannot be seen an are reliant on meters to tell us what is happening in the circuit	No one model explains all features of an electric circuit Many ideas about moving charge are difficult to prove	Understanding the concept of potential difference made more difficult by the inconsistence use of terms such as voltage and voltage drop instead of potential difference Analogies associated with this might be misleading	The use of light globes as current meters might lead students to think that their brightness depends only on the current in them rather than the power.
5. Knowledge about learners thinking that influences your teaching of this idea	Students often think that only one wire needs to be connected between the battery	Students tend to think that the battery is the source of charges or charged particles which may lead to the thinking of charges as electricity/voltage/amps	Everyday language about charging batteries tends to reinforce the misconception that they provide charge	Students tend to think that something is used up in the circuit and tend to think that the something is current
6. Other factors that influence your teaching of this idea	Electricity is used everyday life to mean current/voltage/energy	Students need to have some notion of atomic structure.	Analogies are often used to explain this and their misleading due to their limitations	It is important to focus on qualitative reasoning to help promote understanding
7. Teaching procedures	Provide students with battery, globe and connecting wires. Get them to connect the circuit	Use best analogy appropriate the level of students e.g. analogy on traffic	Petrol tank with a sensor and traffic analogy	Traffic analogy

APPENDIX 27

CoRe prepared by Mr A after the workshop

CoRes Mr A 2009

BIG IDEA	A Capacitor is capable of storing electrical charge and energy and it is an electronic equipment.	The higher the value of capacitance, the more charge the Capacitor can store.	The capacitor's capacitance is a measure of the amount of charge stored on each plate for a given potential difference or voltage which appears between the plates.	A capacitor consists of two conducting plates which are separated by an insulating material that is called the dielectric.
1. What do you intend the learners to learn about this idea?	Capacitors are to a certain extent like batteries, but differ sharply on how the energy is stored. A capacitor stores energy in an electric field, while a battery stores energy as chemical energy which in turn is converted to electrical energy.	Capacitance is a property of a capacitor. Any device capable of storing electrical charge has capacitance. The greater this capability therefore the greater the charge that can be stored.	Capacitance is a ratio of charge to potential difference. If for a small potential difference across the plates of a capacitor, a large amount of charge is stored in the capacitor- Then the capacitor has large capacitance.	A dielectric is any insulating material placed between the plates of a capacitor. Different materials have different dielectric constants- K. The greater the dielectric constant the greater the capacitance.
2. Why is it important for learners to know this?	This is will help learners a great deal in explaining the behavior of capacitors as well as enlightening leaners on how to handle capacitors.	Learners will understand that different devices require different capacitors with different capacitances.	This will help learners understand the quantitative aspects of capacitance.	This will give learners a picture of the design of the capacitor. The role of each component and so on.

3. What else you might know about this idea(that you don't intend learners to know yet)	Capacitors don't really store charge at all. They allow negative charge to be transferred from one plate to the other, thus establishing an electric field between their plates. But there is no net increase in charge -the amount of charge on the capacitor's plates, after 'charging', is exactly the same as there was before 'charging' -it's just moved around! What capacitors 'store' is energy, not charge.	When capacitors are connected in series their total capacitance is smaller than the value of the smallest capacitor. Yet with resistors connected the same way the opposite is true.		Some materials offer less opposition to field flux for a given amount of field force. Materials with a greater permittivity allow for more field flux (offer less opposition), and thus a greater collected charge, for any given amount of field force (applied voltage).
4. Difficulties /limitations connected with teaching this idea	The idea of a capacitor storing charge appears a bit confusing. There are two types of charge + and _. Which of the two does a capacitor store? Or is it both? If a capacitor stores energy or charge- does it therefore mean charge and energy are one and the same thing?		The concept of charge accumulating on a plate of a capacitor is rather too abstract. Electrons being moved from one plate to the other gives an impression that the was no net charge change.	Real life capacitors like the electrolytic capacitors present a rather very difficult picture to comprehend, that is compared to the simplified diagram.
5. Knowledge about learners thinking that influences your teaching of this idea	Leaners immediately think of a capacitor as a container where you can pour charge until it's full.	The larger the volume of the capacitor, the larger the charge that can be poured. Disregarding the fact that distance of	The idea of a potential difference being created on the capacitor which opposes the charging potential difference may	Learners tend to think that charges are used in the circuit

6. Other factors that influence your teaching of this idea	Capacitance is sometimes confused with potential difference	Learners have difficulties to understand how charges are accumulated in a capacitor	Analogies on this concepts are sometimes misleading	Learners need to visualize some concepts.
7. Teaching procedures	Simulations, electronics kits	Simulations, electronics kits Worksheet for questions	Worksheets	Simulations, electronics kits

Mr A's CoRe for lesson 1

BIG IDEA	A Capacitor is capable of storing electrical charge and energy and it is an electronic equipment	Observation Notes
1. What do you intend the learners to learn about this idea?	Capacitors are to a certain extent like batteries, but differ sharply on how the energy is stored. A capacitor stores energy in an electric field, while a battery stores energy as chemical energy which in turn is converted to electrical energy.	The teachers did not explain this in any of his lessons. It was essential that learners know about this at the beginning of this chapter. The teacher could have designed an activity to cater for this.
2. Why is it important for learners to know this?	This is will help learners a great deal in explaining the behavior of capacitors as well as enlightening leaners on how to handle capacitors.	The teacher tried to explain the behaviour of capacitors as well as enlightening learners on how to handle capacitors through the practical activity on getting learners to see what is inside a capacitor.
3. What else you might know about this icea(that you don't intend learners to know yet)	Capacitors don't really store charge at all. They allow negative charge to be transferred from one plate to the other, thus establishing an electric field between their plates. But there is no net increase in charge -the amount of charge on the capacitor's plates, after 'charging', is exactly the same as there was before 'charging' -it's just moved around! What capacitors 'store' is energy, not charge.	The teacher tried to explain this in lesson two. He used a representation of a diagram to explain. Some learners were grappling to understand the process. He tried to explain through computer simulations to help learners grasp the charging process.
4. Difficulties /limitations connected	The idea of a capacitor storing charge appears a	The teachers demonstrated this when he explained how

with teaching this idea	bit confusing. There are two types of charge + and _. Which of the two does a capacitor store? Or is it both? If a capacitor stores energy or charge- does it therefore mean charge and energy are one and the same thing?	charging and discharging takes place through the simulations.
5. Knowledge about learners thinking that influences your teaching of this idea	Leaners immediately think of a capacitor as a container where you can pour charge until it's full.	.Though not Scientific, he used an example of a cheese roll and a soccer player. His example of a cheese roll was that if one eats a cheese roll he/she will develop a capacity full of energy
6. Other factors that influence your teaching of this idea	Capacitance is sometimes confused with potential difference	The teacher could have used equations in his lessons to explain this.
7. Teaching procedures	Simulations, electronics kits	He gave all learners enough time to engage with the simulations. All learners was given time to work in groups. I think his teaching procedure would be excellent if learning activities were designed and connected in such way as to address one big idea in one lesson.

Mr A's CoRe for lesson 2

BIG IDEA	The higher the value of capacitance, the more charge the Capacitor can store.	Observation Notes
1. What do you intend the learners to learn about this idea?	Capacitance is a property of a capacitor. Any device capable of storing electrical charge has capacitance. The greater this capability therefore the greater the charge that can be stored.	The teacher explained this in lesson 2. He used an example of a stadium and spectators to explain capacity and capacitance. He used the stadium as a capacitor and the spectators as charges to explain that a big capacitor will have a big capacity.
2. Why is it important for learners to know this?	Learners will understand that different devices require different capacitors with different capacitances.	He engaged learners to discuss what happens when the plates of the capacitor are closer together and what happens when they are apart. Learners showed some bit of understanding. Mathematical relations could have assisted in explaining these relationships.
3. What else you might know about this idea(that you don't intend learners to know yet)	When capacitors are connected in series their total capacitance is smaller than the value of the smallest capacitor. Yet with resistors connected the same way the opposite is true.	He derived the formula for capacitors to explain this
4. Difficulties /limitations connected with teaching this idea		
5. Knowledge about learners	The larger the volume of the capacitor, the larger the	He used the example of the stadium to explain the

thinking that influences your teaching of this idea	charge that can be poured. Disregarding the fact that distance of separation, presence of a dielectric and plate area play a role.	relation between Capacitor and area
6. Other factors that influence your teaching of this idea	Learners have difficulties to understand how charges are accumulated in a capacitor	This was evident when he explained how charging in a capacitor takes place
7. Teaching procedures	Simulations, electronics kits Worksheet for questions	He used examples to explain this. The teaching procedure was fine but it needed more Scientific examples.

Mr A's CoRe for lesson 3

CoRes MR A 2009

BIG IDEA	The capacitor's capacitance is a measure of the amount of charge stored on each plate for a given potential difference or voltage which appears between the plates.	Observation Notes
1. What do you intend the learners to learn about this idea?	Capacitance is a ratio of charge to potential difference. If for a small potential difference across the plates of a capacitor, a large amount of charge is stored in the capacitor- Then the capacitor has large capacitance.	No examples through calculations were done in class
2. Why is it important for learners to know this?	This will help learners understand the quantitative aspects of capacitance.	I don't think the teacher covered this aspect clearly. Some calculations were supposed to be included to explain this
3. What else you might know about this idea(that you don't intend learners to know yet)		The teacher did not explain category in the CoRe. He got stuck as designing CoRes was a new thing to him
4. Difficulties /limitations connected with teaching this idea	The concept of charge accumulating on a plate of a capacitor is rather too abstract. Electrons being moved from one plate to the other gives an impression that the was no	The teacher tried to explain this in lesson two and in lesson three when engaged learners on charging and the capacitor through the Plato Simulations.

	net charge change.	
5. Knowledge about learners thinking that influences your teaching of this idea	The idea of a potential difference being created on the capacitor which opposes the charging potential difference may not make sense to learners. A battery or cell are the only gadgets that give electricity or have a pd.	The teacher did not arrive this point in his teaching
6. Other factors that influence your teaching of this idea	Analogies on this concepts are sometimes misleading	He used examples based on what learners understand. They seem not Scientific but learners understood what he was trying to explain
7. Teaching procedures	Worksheets	He did not give a worksheet

Mr A' CoRe for lesson 4

Lokes Mr A 2009

BIG IDEA	A capacitor consists of two conducting plates which are separated by an insulating material that is called the dielectric.	
1. What do you intend the learners to learn about this idea?	A dielectric is any insulating material placed between the plates of a capacitor. Different materials have different dielectric constants- K. The greater the dielectric constant the greater the capacitance.	He explained dielectric in lesson 2. He did not explain different materials with different dielectric
2. Why is it important for learners to know this?	This will give learners a picture of the design of the capacitor. The role of each component and so on.	The design of the capacitor was explained through the practical activity on opening a capacitor.
3. What else you might know about this idea(that you don't intend learners to know yet)	Some materials offer less opposition to field flux for a given amount of field force. Materials with a greater permittivity allow for more field flux (offer less opposition), and thus a greater collected charge, for any given amount of field force (applied voltage).	Did not teach this part as he did not intend learners to know.
4. Difficulties /limitations connected with teaching this idea	Real life capacitors like the electrolytic capacitors present a rather very difficult picture to comprehend, that is compared to the simplified diagram.	

5. Knowledge about learners thinking that influences your teaching of this idea	Learners tend to think that charges are used in the circuit	
6. Other factors that influence your teaching of this idea	Learners need to visualize some concepts.	Simulations and practical activities were used during group tasks
7. Teaching procedures	Simulations, electronics kits	All learners were exposed to simulations and electronic kits.

APPENDIX 28

CoRes for Ms K

Lesson1

CoRes: Capacitance K SECONDARY SCHOOL Ms K October 2009

BIG IDEAS	A Capacitor can absorb extra charge. The idea of charging and discharging in a camera flashes. Each key has unique capacitance of the computer	Observation Notes
1. What do you intend the learners to learn about this idea?	The idea that the capacitor can absorb extra charge saves electronic devices. The distance between the plates of a capacitor have influence in the functioning of a keyboard. Charging and discharging in camera flashes	Explained to learners in lesson 3 and lesson 4
2. Why is it important for learners to know this?	Understanding the role of capacitors in daily life. Able to state, explain, interpret and evaluate scientific and technological knowledge and can apply the capacitors in everyday contexts	She used examples such as a computer and camera flash to explain this
3. What else you might know about this idea(that you don't intend learners to know yet)	The flow of charge involves the interaction between charged particles in the circuit especially charging and discharging of the capacitors	Explained through a computer simulation
4. Difficulties/Limitations connected with the teaching this idea.	Not any model explains all features of an electric circuit. Many ideas about moving charge are difficult to prove	No observation made on this.
5. Knowledge about learners thinking that influences your teaching of this idea	Everyday language about charging and discharging of capacitors tend to reinforce the misconception that they have charge for longer periods	She explained this clearly when explaining how a camera flash works.
6. Other factors that influence your teaching of this idea	Analogies are often used to explain this and they are misleading due to their limitations	She used examples and not analogies
7. Teaching procedures	Provide camera and computer keyboards	

K SECONDARY SCHOOL

CoRes: Capacitance Ms K October 2009

BIG IDEAS	A capacitor is an electric circuit device that can store charge	The capacitance of a capacitor is proportional to the quantity of charge that can be stored in it for each volt difference in potential between its plates	A Capacitor can absorb extra charge. The idea of charging and discharging in a camera flashes. Each key has unique capacitance of the computer	The charged capacitor lights an LED briefly. The capacitor blocks the flow of DC current. No current can flow while a capacitor remains charged. The capacitor is used as a voltage divider
1. What do you intend the learners to learn about this idea?	The capacitor takes few seconds to charge fully and it discharges for a very short period of time	Mathematically, their relationship is written as $C = \frac{Q}{V}$ $C = k\frac{A}{d}\varepsilon_0$	The idea that the capacitor can absorb extra charge saves electronic devices. The distance between the plates of a capacitor have influence in the functioning of a keyboard. Charging and discharging in camera flashes	The use of practical experiments in class enable learners to recognize and compare the scientific value of knowledge about capacitors
2. Why is it important for learners to know this?	This is an essential prerequisite for understanding scientific models of electric circuit. e.g. capacitors in electric circuit, what is their role in the circuits?	Understanding the mathematical equations ,definitions,and their relations in solving problems concerning capacitors	Understanding the role of capacitors in daily life. Able to state, explain, interpret and evaluate scientific and technological knowledge and can apply the capacitors in everyday contexts	To evaluate the impact of scientific and technological knowledge on sustainable development of resources and suggest long term and short term strategies to improve the management of resources in the

Ms K's CoRe prepared after the workshop held in day1

K SECONDARY SCHOOL

CoRes: Capacitance Ms K October 2009

BIG IDEAS	The capacitance of a capacitor is proportional to the quantity of charge that can be stored in it for each volt difference in potential between its plates	Observation Notes
1. What do you intend the learners to learn about this idea?	Mathematically, their relationship is written as $C = \frac{Q}{V}$ $C = k\frac{A}{d}\varepsilon_0$	She explained this in details in her second lesson. She also explained the mathematical relation to show the relation between Capacitance and Area. She also gave a list of dielectric constants of different materials
2. Why is it important for learners to know this?	Understanding the mathematical equations ,definitions,and their relations in solving problems concerning capacitors	Explained this in detail in a second lesson. She also gave learners a task to do. Some learners struggled to the use of calculator. Definitions were written on the board for learners to copy.
3. What else you might know about this idea(that you don't intend learners to know yet)	The importance of proportionality constant, its origin and the dielectric	
4. Difficulties/Limitations connected with the teaching this idea.	The writing of the units although the answers are based on the questions	Learners struggled to work out the correct unit when the first worksheet was conducted. There was a huge improvement when they continued with working out of questions in lesson 4.
5. Knowledge about learners thinking that influences your teaching of this idea	Learners tend to think that writing of units is not relevant	Became evident as the teacher was working problems on the board
6. Other factors that influence your teaching of this idea	Learners need to have more questions about capacitance	
7. Teaching procedures	Provide learners with worksheets, class work, and homework. Use of data projector and computer simulations	She followed the teaching procedure planned. Most of her lessons were teacher centred.

Ms K' CoRe for lesson 2

K SECONDARY SCHOOL

CoRes: Capacitance Ms K October 2009

BIG IDEAS	A Capacitor can absorb extra charge. The idea of charging and discharging in a camera flashes. Each key has unique capacitance of the computer	Observation Notes
1. What do you intend the learners to learn about this idea?	The idea that the capacitor can absorb extra charge saves electronic devices. The distance between the plates of a capacitor have influence in the functioning of a keyboard. Charging and discharging in camera flashes	Explained to learners in lesson 3 and lesson 4
2. Why is it important for learners to know this?	Understanding the role of capacitors in daily life. Able to state, explain, interpret and evaluate scientific and technological knowledge and can apply the capacitors in everyday contexts	She used examples such as a computer and camera flash to explain this
3. What else you might know about this idea(that you don't intend learners to know yet)	The flow of charge involves the interaction between charged particles in the circuit especially charging and discharging of the capacitors	Explained through a computer simulation
4. Difficulties/Limitations connected with the teaching this idea.	Not any model explains all features of an electric circuit. Many ideas about moving charge are difficult to prove	No observation made on this.
5. Knowledge about learners thinking that influences your teaching of this idea	Everyday language about charging and discharging of capacitors tend to reinforce the misconception that they have charge for longer periods	She explained this clearly when explaining how a camera flash works.
6. Other factors that influence your teaching of this idea	Analogies are often used to explain this and they are misleading due to their limitations	She used examples and not analogies
7. Teaching procedures	Provide camera and computer keyboards	

Ms K's CoRe for lesson 3

K SECONDARY SCHOOL

CoRes: Capacitance Ms K October 2009

BIG IDEAS	The charged capacitor lights an LED briefly. The capacitor blocks the flow of DC current. No current can flow while a capacitor remains charged. The capacitor is used as a voltage divider	Observation Notes
1. What do you intend the learners to learn about this idea?	The use of practical experiments in class enable learners to recognize and compare the scientific value of knowledge about capacitors	She showed simulations on charging discharging a capacitor to learners.
2. Why is it important for learners to know this?	To evaluate the impact of scientific and technological knowledge on sustainable development of resources and suggest long term and short term strategies to improve the management of resources in the environment	No evidence of this in her lessons
3. What else you might know about this idea(that you don't intend learners to know yet)	Internal resistance of the battery, chemical reactions in the battery. Why a battery provides a fixed amount of energy per coulomb and why this depends on the chemical it contains	
4. Difficulties/Limitations connected with the teaching this idea.	The use of LED as current meters might lead learners to think that their brightness depends only on the current in them rather than the power	No evidence of this in her lessons
5. Knowledge about learners thinking that influences your teaching of this idea	Learners tend to think that something is used up in the circuit and also tend to think that something s current	No evidence of this in her lessons
6. Other factors that influence your teaching of this idea	Provide with LED, battery, capacitors, crocodile clips	
7. Teaching procedures		Not explained.

Ms K's CoRe for lesson 4

APPENDIX 29

WORKSHEET 1

Question 1

The ability of capacitors to store charge makes them essential components in electrical appliances. Users are often warned of the ganders associated with capacitors inside appliances.

1.1 Briefly explain why it can be dangerous to touch a charged capacitor?

1.2 A certain parallel plate capacitor consists of two identical aluminum plates, each of area 2 X $10^{-4}m^2$. The plates are separated by a distance of 0,03mm, with air occupying the space between the plates.

1.2.1 Calculate he “Capacitance” of the capacitor.

1.2.2 Calculate the charge stored on the plates of the capacitor when connected to a 6V battery.

1.3 Calculate the “Capacitance” of a capacitor if a 250 V power source connected to the plates respectively charges the plates +2500nCand -2500 nC

1.4 Calculate the charge that a 2,5 micro farad capacitor can store if a 12 V battery is connected to it

APPENDIX 30

WORKSHEET 2

Question 1

An insulating layer between the two plates of a capacitor

Because they:a.

(i) allow the plates to be as close as possible without contact
(ii) provide mechanical support
(iii) prevent dielectric breakdown that occurs when charges move through the insulating medium when high voltages are applied across the plates
(iv) increase the “Capacitance” of the capacitor, so that more can be stored for the same voltage

b. What is a dielectric?

c. Why are dielectrics used in most capacitors?

Question 2

Calculate the amount of energy stored in a 150μF capacitor in a camera when it is connected to a 200 V battery

Question 3

A 50 pF capacitor has a nylon dielectric layer (K = 3, 7) with a thickness 0,05mm. Calculate the area of the plates (ε_o = 8, 85 x 10^{-12} Fm^{-1}).

APPENDIX 31

LESSON PLANS FOR Ms K

LEARNING AREA : PHYSICAL SCIENCE

LEARNING OUTCOMES : LO_1, LO_2

ASSESSMENT OUTCOMES : AS_2, AS_1

CONTENT : Capacitors

CONTEXT : Defining capacitors

ASSESSMENT METHOD : Asking questions, class work

INTEGRATION : Technology

RESOURCES : Data projector, Study and master textbooks

ACTIVITY : 1

TEACHER ACTIVITY	LEARNER ACTIVITY
The teacher explains 'capacitor' and why it is important in everyday's life. A capacitor is an electric circuit device that	learners works through the information given to them, which explains about capacitors work and how they store charge in them. By using

can store charge. The teacher uses the data projector to show the flocs of electrons in the wire connecting to the capacitor, when the switch is on and off. The teacher explained the concept in such a manner so that the learner is able to state, explain, interpret and evaluate scientific and technological knowledge and can apply it in everyday contexts. The teacher asked questions concerning the idea about capacitors. Classworks given.	the data projector the learners was able to get a clear picture about capacitors, by closing the switch on and off, they have done it themselves in groups using data projector. The learner is able to state, explain, interpret and evaluate scientific and technological knowledge and can apply it in everyday content - They defined and discussed basic prescribed scientific knowledge about the capacitors.

SPECIAL NEEDS :

EXPANDED OPPORTINITIES : To communicate information and present scientific arguments about the topic with clarity and precision.

REFLECTION :

TEACHER : DURATION 40MIS

LEARNING AREA : PHYSICAL SCIENCE

LEARNING OUTCOMES : LO_2, LO_3

ASSESSMENT OUTCOMES : $AS_1, AS_3; AS_2, AS_3$

CONTENT : capacitors

CONTEXT : Application of capacitors.

ASSESSMENT METHOD : worksheet, homework.

INTEGRATION : Technology

RESOURCES : worksheet, study and master.

ACTIVITY : 2

TEACHER ACTIVITY	LEARNER ACTIVITY
The teacher explained the applications of capacitor in detail that it is used in cameraflashes, how the produces a big current by a very short period of time	learner collected the information regarding the application of the capacitor. They were able to evaluate the impact of scientific and technological knowledge on

by discharging through the filament of bulb, giving a very bright light for a very short period of time. Capacitor can absorb extra charge thereby saving the electronic devices. Capacitors are also used in the keys of a computer keyboard. The teacher draws the picture of computer keyboard for a eg: a key and explained it very clearly. Hereby evaluating the impact of Science on the environment and Sustainable development.

Sustainable development of resources and suggest long-term and short term strategies to improve the management of resources in the environment. They were given the worksheet. In which they were asked to write any two applications of the capacitors other than what is discussed in the classroom. Learners discussed about it and expressed their ideas and views in the class.

SPECIAL NEEDS :

EXPANDED OPPORTINITIES : The impact of science on human development.

REFLECTION :

TEACHER : [illegible] DURATION 40mts

LEARNING AREA : PHYSICAL SCIENCE

LEARNING OUTCOMES : LO_1, LO_2

ASSESSMENT OUTCOMES : AS_2, AS_1, AS_3.

CONTENT : capacitors

CONTEXT : capacitance, dielectric, problem solving.

ASSESSMENT METHOD : classworks, worksheet, homework.

INTEGRATION : Mathematics, Technology.

RESOURCES : worksheet, data sheet for dielectric

ACTIVITY : 3

TEACHER ACTIVITY	LEARNER ACTIVITY
The teacher introduced the term capacitance, dielectric constant, the factors influencing the capacitance which are	learners work through the information given, which explains what is meant by capacitance. Seek patterns and trends, represent them in different forms to draw

the area of the plates, distance between the plates, dielectric constant. The teacher introduced two formulas for the capacitance, give certain examples to show the mathematical calculations. The teacher has also given the worksheet and homeworks to the learners and also have given the corrections to those problems.	conclusion, and formulate simple generalisations. Learners applied known problem-solving strategies to solve multi step problems. They have gone through different types of problems regarding the finding of capacitance, area, distance between the plates. They know how to calculate the unknown quantity in the formula. Learners know to solve multi step problems.

SPECIAL NEEDS :

EXPANDED OPPORTINITIES : Able to analysis data for the scientific investigation.

REFLECTION :

Important concepts to consider when dealing with electric circuits

- Charge
- Current
- Potential difference
- Resistance
- Electrical Nature of materials-conductors; insulators and resistors
- Circuit diagrams

Discussion on challenges faced in teaching electric circuits

- The flow of current in the circuit cannot be seen. Always rely on meters to explain what is happening.
- A large number of analogies have been developed to explain circuits. They all have limitations.
- It is easy to reduce explanations to mathematical manipulations.

continued

- There are many misconceptions that teachers need to address- e.g. Current is used up, current flows out of the battery to the user
- Textbooks explains concepts associated with electric circuits in different ways.- e.g voltage is potential difference. voltage is potential. Voltage is potential difference and also emf
- Girls do not have practical experience with electric circuits.(American journal of Physics,72(1),98-115) .

Views on how electric circuits should be taught

- Diagnostic test
- Identify misconceptions: the following models could help
  - Attenuation model
  - Clashing model (Shaffer and McDermott, 1992)
  - Constant model
  - Sequence model
  - Unipolar model
- Instruction by guided enquiry-refer handout(McDermott *et al,2000*)
- Using analogies – refer handout.

The Attenuation model

- Learners believe current gets used up in the circuit
- They may believe reading on the last ammeter is zero
- These learners will choose answers depending whether they are working in terms of conventional current or electron flow. Of course it is not current but potential difference or energy per unit charge that is used up in the circuit

The clashing model

- Learners believe that both positive and negative terminals of the cell deliver equal quantities of current
- In the middle of the circuit the currents either combine or cancel as they are in opposite direction

The constant model

- Learners believe that a cell always delivers the same current regardless of the number of components in the circuit and their resistance

The sequence model

- Learners look at the components of an electric circuit as acting sequentially or independently of each other. The believe that a change in one of the components can only affect things after it, not before it.

Unipolar model

- Learners believe that electricity comes from a single source(like the positive terminal of the cell) and moves through the circuit until an open switch prevents it to flow.

CoRes

- Refer to appendix 26

APPENDIX 33

An analogy for teaching Electrical circuits

CONCEPTS		
Charges	-	cars
Current	-	Traffic
Potential difference	-	Petrol
Resistance	-	Condition of the road
Conductor	-	Road

Usefulness

- We can use the route of cars from home to work and back to teach circuits. All cars leaving home are expected to return(Its not like a Grand Prix where some are "lost")- conservation of charge- constant current
- All petrol must be used up in one trip as it is replenished "at home" to explain the p.d used up in the circuit.
- Ammeter is like a counter cable used to measure traffic(number of cars passing a point in a time period- probably 1 hour). The counter is placed across the road in the path of the cars so that they can be "counted". In the same way the ammeter is connected in series so that charges actually pass through it. The counter cable is thus enough to drive over easily like the low resistance of an ammeter.
- The petrol can be measured by dipping a sensor into the tank and recording how much petrol is present and then repeating this after getting to work or home again. The difference is how much was used. This is analogous to the voltmeter taking two readings of potential in the circuit and showing the difference. The high resistance of the voltmeter is to prevent the charges from passing through it.
- At parallel combination, charges take different routes thus split as cars do at an intersection of alternative routes. They rejoin after the detour.
- More charges take the low resistance path and less charges take high resistance path. This is like cars on the road- more cars will take road in good condition while few take the poor road.

Shortcomings

- We have to make sure that pupils don't form the misconception that charges are "stored" in the cell and that when the switch is open they "flood" out of the cell. Learners need to understand that charges are present in all matter. The charges are present in all parts of the circuit and it is the difference in potential that causes them to move.
- Learners may form a misconception that it is the "speed" of the charges that determines the current. It is important to refer to the rate of flow of charge. i.e the number of charges passing a point per unit of time.
- The conducting wires need to likened to hills that the car can free-wheel down to explain that no energy is used up(per charge) in passing through the wires.
- The cars need to be explained as "bumper to bumper" to make sense of how charges in a circuit affect all parts of the circuit.

McDermott et al.,(2000)