

https://dspace.org/

The palatal vault in adult South African Bantu-speaking Negroids

Cleaton-Jones, P.

1970

http://hdl.handle.net/10539/20320

Cleaton-Jones, P. 1970. The palatal vault in adult South African Bantu-speaking Negroids. Journal of the dental association of South Africa; 25(4):108-110

Downloaded from a DSpace repository. https://dspace.org/

THE PALATAL VAULT IN ADULT SOUTH AFRICAN BANTU-SPEAKING NEGROIDS

P. CLEATON-JONES

Dental Research Unit of the University of the Witwatersrand and South African Medical Research Council, Johannesburg

A 'HIGH arched palate' is one of the criteria for the diagnosis of Marfan's syndrome (Schamroth and Segal, 1960). What constitutes such a palate however, remained empirical and obscure until Shapiro *et al* (1963, 1967) and Redman *et al* (1965, 1966) described a palatal index which, by relating palatal height to palatal width, gives an indication of its relative height or narrowness; and they defined a 'high arched palate' as one with a palatal index more than two standard deviations above the normal. The normal palatal indices described by those authors are for North American Caucasians. This study was undertaken to determine normal palatal indices for adult South African Bantu-speaking Negroids.

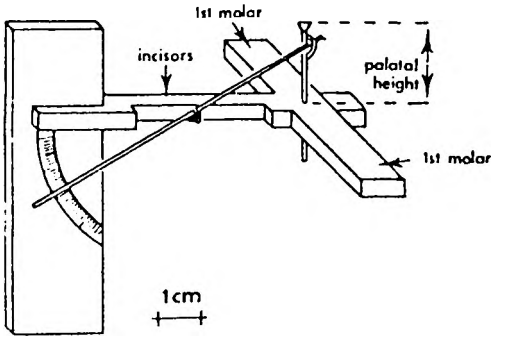

FIG. 1.—Diagram of palatometer used in the study.

MATERIALS AND METHODS

The palatal height was measured in the midline, in line with the maxillary first molars and relative to an established occlusal plane, using a simple, specially-constructed palatometer (Fig. 1). This instrument consists of a central arm on which the maxillary central incisors rest together with a cross-piece placed on the occlusal surfaces of the maxillary first molars. These three points established an occlusal plane. A pin able to move vertically in the midline registered the palatal height relative to this occlusal plane. This height was then transferred to a scale outside the mouth *via* a pointer.

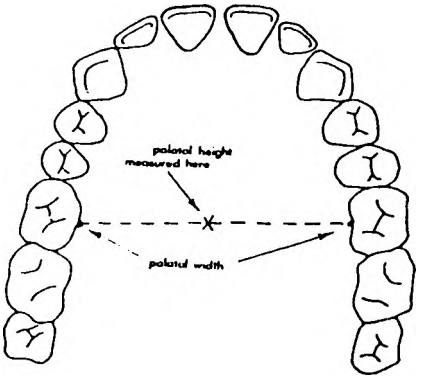

FIG. 2.—Points of measurement of palatal height and width.

Palatal width was measured between the midpoints of the palatal aspects of

TABLE I.—Palatal Index (= Palatal height/palatal width × 100)

Sex	No. Cases	Range	Mean	Standard error of mean	Standard deviation	95% Confidence interval for the true mean
Male	100	38.6—71.5	54.3	0.8	7.5	52.6—56.0
Female	100	40.0—74.4	56.1	0.8	7.9	54.3—57.9

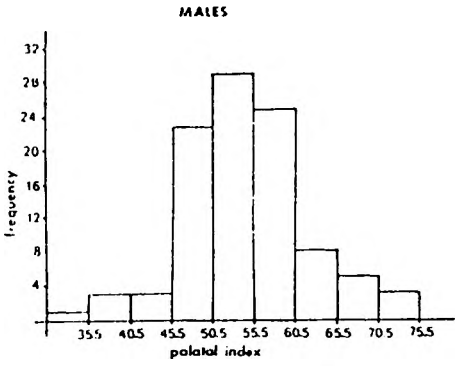

FIG. 3.—Histogram of frequency distribution of male palatal indices.

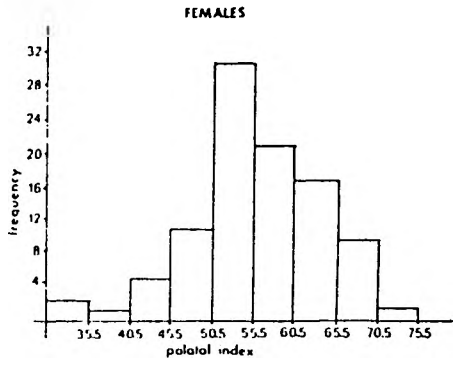

FIG. 4.—Histogram of frequency distribution of female palatal indices.

the maxillary first molars, at the cervical margin using dividers (Fig. 2). All measurements were made to the nearest millimeter.

A total of 200 adult Bantu-speaking Negroids comprising 100 males and 100 females were examined. Each subject had an apparently normal mature palate and a full dentition.

The palatal index was calculated using the formula of Shapiro *et al* (1963).

$$\text{Palatal index} = \frac{\text{palatal height in mm.}}{\text{palatal width in mm.}} \times 100.$$

RESULTS

These are summarized in Table I. The mean palatal index in males is 54.3 and in females 56.1. The frequency distribution of the palatal indices in each group are shown in histogram form in Figs. 3 and 4.

DISCUSSION

The results obtained in this study are higher than those reported in the studies of Shapiro *et al* and Redman *et al*, due mainly to the different methods of measurement. These authors used instruments measuring palatal height from a horizontal plane established between the labial tip of the interdental papilla and the palatal cervical lines of the maxillary first molar. The height itself was measured in the midline at the junction of the hard and soft palate.

Jacobson (1967), in his extensive study of the Bantu dentition, discussed the various methods of measuring palatal height. He measured it in the midline from a plane connecting the mesolingual cusp tips of the maxillary first molars. A similar approach was adopted in this study; the palatal height was measured from an established occlusal plane in the line of the maxillary first molars.

Whatever method of measuring palatal height and width is used the index suggested by Shapiro *et al* is a most valuable one.

Having defined normal palatal indices for South African Bantu-speaking Negroids, this study is being extended to investigate the palatal vault in Marfan's syndrome and other cardiac diseases.

SUMMARY

Using a specially-constructed palatometer and dividers, the palatal heights and widths of 100 male and 100 female adult South African Bantu-speaking Negroids were measured.

A palatal index (palatal index = palatal height/palatal width × 100) was calculated for each individual and the mean for each sex determined.

In males the main index is 54.3 ± 0.8 with a standard deviation of 7.45, and in females it is 56.1 ± 0.8 with a standard deviation of 7.85.

ACKNOWLEDGEMENTS

The author is indebted to Dr. Leo Schamroth for having suggested and encouraged this study, and to Dr. D. H. Retief for his help with the manuscript.

REFERENCES

JACOBSON, A. (1967) The Bantu Dentition. Unpublished Ph.D. thesis. University of the Witwatersrand, Johannesburg. pp 126-127.

REDMAN, R. S., SHAPIRO, B. L., and GORLIN, R. J. (1965) Measurement of normal and reportedly malformed palatal vaults III. Down's Syndrome. *J. Pediat.* 67: 162-165.

REDMAN, R. S., SHAPIRO, B. L., and GORLIN, R. J. (1966) Measurement of normal and reportedly malformed palatal vaults II. Normal juvenile measurements. *J. Dent. Res.* 45: 266-269.

SCHAMROTH, L., and SIGAL, F. An Introduction to Congenital Heart Disease. 1st Ed. p. 1. Blackwell Scientific Publications, Oxford.

SHAPIRO, B. L., REDMAN, R. S., and GORLIN, R. J. (1963) Measurement of normal and reportedly malformed palatal vaults I. normal adult measurements. *J. dent. Res.* 42: 1039.

SHAPIRO, B. L. *et al* (1967) The palate and Down's syndrome. *New Eng. J. Med.* 276: 1460-1463.