

https://dspace.org/

Organisational emotional intelligence and psychological capital in the public sector in Uganda

Byarugaba, Jolly Kabagabe

2016

https://hdl.handle.net/10539/23753

Byarugaba, Jolly Kabagabe (2016) Organisational emotional intelligence and psychological capital in the public sector in Uganda, University of the Witwatersrand, Johannesburg, <https://hdl.handle.net/10539/23753>

Downloaded from a DSpace repository. https://dspace.org/





ORGANISATIONAL EMOTIONAL INTELLIGENCE AND PSYCHOLOGICAL CAPITAL IN THE PUBLIC SECTOR IN UGANDA

Jolly Kabagabe Byarugaba

Student No. 469600

PhD Thesis

Wits Business School

University of Witwatersrand, Johannesburg

South Africa

Supervised by: Prof Drikus Kriek

December 2016

DEDICATION

This thesis is dedicated to my parents, Jairensi Tukahirwa Katsigazi and John Katsigazi (RIP), who ‘planted the education seed’; to my current immediate family, Dr Jotham Mbiito Byarugaba, Israel Agaba, Lindah Agaba, Nancy Ankunda, Doreen Andinda, Sonia Ashaba Aheebwa and Lior Ainomugisha Agaba as my PsyCap enhancers.

ABSTRACT

Employee psychological capital (PsyCap) is described as employee belief in performing one's work well (efficacy), in succeeding now (optimism), succeeding in the future (hope), and in persevering amidst challenges or opportunities (resilience) in the workplace. A body of research knowledge provides empirical evidence that PsyCap is linked to positive individual, team and organisational outcomes. A review of literature found a few studies that have explored determinants of employee psychological capital; particularly, no study had examined the relationship between positive organisational emotional intelligence (OEI) theory and PsyCap. OEI is the emotional and social climate of an organisation. Thus, the purpose of this study was to test a model fit of the influence of OEI on PsyCap.

A positivist quantitative methodology approach was used to establish whether there was a significant positive relationship between OEI and PsyCap. A cross-sectional survey quantitative research design was adopted for the study. From a population of about 295,100 employees in the public sector, data was collected voluntarily from 668 participants, randomly sampled from employees in public sector organisations. A self-administered questionnaire adapted from previously validated instruments for OEI and PsyCap was used to collect data. The pre-test supported the psychometric scales of the constructs, demonstrating reliability, validity and relevance in the workplace.

This non-experimental study adopted structural equation modelling (SEM) and Average Moments of Structures (AMOS) for data analysis. The analysis established a model fit, implying there was a positive association between OEI and PsyCap among public servants in Uganda. However, out of the eight dimensions of OEI specified for the model, only four dimensions,

namely job happiness, supervisory leadership, organisational responsiveness and positive impression, were significantly associated with employee PsyCap. The other four OEI dimensions, namely, compensation satisfaction, organisational cohesiveness, work–life balance and diversity management, were not significantly associated with workplace PsyCap. The study thus recommends that, in Uganda, the OEI model by Stein (2005), particularly the dimensions of job happiness, organisational responsiveness, supervisory leadership and positive impression, can be applied to enhance employee PsyCap. The other dimensions of Stein's OEI model, which do not have significant association with employee PsyCap, require further investigation to understand whether they can be applied.

The study makes a theoretical contribution by linking the organisational emotional intelligence and PsyCap theory. It makes an empirical contribution to psychological capital theory by highlighting OEI dimensions that could develop PsyCap in organisations. Testing a theoretical model of OEI and PsyCap and establishing a model fit suggests that managers of public sector organisations in developing countries such as Uganda need to improve their OEI stance, in order to enhance employee PsyCap for positive individual and organisational outcomes. Further research can base on the study findings to advance knowledge in PsyCap.

DECLARATION

I, Jolly Kabagabe Byarugaba, declare that this thesis is my own research work. It is submitted in fulfillment of the requirement for the award of the Degree of Philosophy at the Witwatersrand Business School, University of Witwatersrand, Johannesburg, South Africa. To the best of my knowledge it has not been submitted for examination for any other degree in any other University in the world. In addition, I declare that all sources of information have been acknowledged and confirm that I received permission and consent to carry out this research from all the stakeholders involved.



Signed: _____ Date: 25.15.2016

AKNOWLEDGEMENTS

This research is the outcome of the contribution from several stakeholders who have influenced my academic life positively. In the spiritual realm, I am most sincerely thankful to the Almighty God for guiding me through the PhD journey. Further, my deepest gratitude goes to my immediate family, my dear spouse, Dr Jotham Mbiito Byarugaba and our children, Israel Agaba, Linda Agaba, Nancy Ankunda, Doreen Andinda and Sonia Ashaba Ahebwa, and grandson Lior Ainomugisha Agaba, for enhancing my PsyCap to enable me to muddle through study, work and family balance. I thank my dear sisters, Jesca, Peace, Harriet and Lydia, for the social support, encouragement and prayer throughout the study process challenges; Uncle Joseph and family, Uncle Robert and Aunt Joan and family for understanding and encouraging me. I will for every stay indebted.

I am extremely grateful to my supervisor, Professor Drikus Kriek, for accepting to supervise me for this study; his expert guidance, encouragement, critique and patience in the long years of development of this thesis. To Professor Louise Whittaker, Director of PhD programmes and her team of Wits Business School (2011-2015) for the mentorship through the research seminar series on philosophy and social theory that guided the conceptualisation of this study. I thank them for the constant support, dedication and encouragement, expert knowledge and wise counsel that enabled me to craft this study. Further, special thanks to my doctoral panel, Prof Drikus Kriek, Prof Louise Whittaker, Prof Terri Carmichael, Prof Karen Milner and Mr Conrad Viedge. I am thankful to Mr Hennie Gerber for his guiding comments in data analysis; to the Wits administration; the Graduate Research Office Administrator (Ms Mmabatho Leeuw); the Faculty of Commence, Law and Management, Deputy Registrar (Ms Vanishree Pillay), the WBS Faculty Administrator (Ms Jennifer Mgolodela) for the smiling welcome at WBS, regular

updates, and timely feedback on status report letters requested by my sponsor. I am more than humbled by Mary Hazelton, Ms Jennifer Croll and Jill Hazelton timely editing and proofreading the thesis; to Matshidiso Makokwe for securing me fair accommodation at the Graduate Accommodation Guest Lodge, when I travelled to Wits.

I further wish to extend special thanks to the PhD cohort at WBS Dr Annet K N Muyimba, Dr Rafig Raji, Dr Jack Zulu, Dr Perez Magda, Dr Girish Nuckchady, Gabriel Laundry Ngouessy-Guibinga, for the scholarly discussions we shared during research seminar series; the motivational support, I will always treasure. In addition, I appreciate the encouraging moments shared with my other MUBS- 'Witsies, who proudly travelled the Wits bus' (Dr Mindra Rachel Katoroogo, and Dr Fiona Mulira), the knowledge unzipped will better the future of our clients.

With great humility, I am grateful to government of Uganda through National Council of Higher Education (NCHE), Makerere University Business School Council (MUBS), MUBS Principal (Prof Waswa Balumywa) and management team for the human capital investment policy that enabled me to obtain the scholarship and other resources to complete this research. I am thankful to the Bursars Office (Dr Gorretti Kyeyune and team) and the School Secretary/HRO office (Mr Francis Yosa and team) for the paper to the processing of resources required for the programme. I am forever humbled and indebted to my colleagues in the human resource department at MUBS (Sam, Francis, Fiona, Janatti, Freddie, Mariam, Akisoferi, Idah, Charles, Sentrine, Edgar, Duncan, Denish, Nicola, Moses, Rose, Ritah, Collins, Asuman, Commet, Mariam, Lucy, Tauba, Gad, Liz, Erina, Simon, Julius, Gladys, Vincent...) for the team work, in addition to standing in for me at work, when I travelled. I give special recognition to Dr Sam Mafabi and the department administrative staff (Florence and Mector) for coordinating departmental activities in

my absence when I travelled for panel sessions. Additional appreciation for other colleagues at MUBS –Prof. Musa Moya who guided me with research statistical issues and led me to a step-by-step appreciation of what I considered complex statistical data analysis issues; Prof. Joseph Ntayi, Prof. JC Munene and Prof. Patricia Joubert, for the many years of academic research mentorship; Dean Semukono Freddie for administrative leadership mentorship. I am indebted to Dr Jotham Mbiito Byarugaba, Ass Prof Vincent Bagire, and Dr Jannatti Kyogabiirwe Bagorogoza for creating the time to read through sections of this study; in addition to the MUBS doctoral community (Dr Sam Mafabi, Ass Prof Moses Muhwezi, Ass Prof Laura Orobia, Dr Francis Kasekende, Dr Annie Begumisa, Prof Godfrey Bakunda, Dr Mabel Birungi Komunda, Dr Agnes Nasuuna Kasirye, Dr Isaac Nkote, Dr Isaac Magoola, Dr Newton Kayongo, Ass Prof Steven Nkundabanyanga, Ass Prof Nixon Kamukama, Dr Muhammed Ngoma, Dr Levi Kabagambe, Dr Ernest Abaho, Dr Edith Basalirwa Mwebaza, Dr Sam Otengei...), whose scholarly community of practice, scholarly remarks during MUBS viva panels informed the thoughts of study work in progress.

I am dearly thankfully to my data collection research assistants, Stephen, Christine, Fred Einstein and Robert; my data entry research assistants Nancy and Doreen; most especially all the institutional managers who offered permission for me to approach employees in the organisations for this study. I am even more grateful to the respondents who patiently and honestly filled in the long questionnaire; any other person that networked me to a respondent. May the Almighty God bless you them abundantly.

TABLE OF CONTENTS

DEDICATION ..... **i**

ABSTRACT ..... **i**

DECLARATION ..... **iv**

AKNOWLEDGEMENTS ..... **v**

TABLE OF CONTENTS ..... **viii**

LIST OF TABLES ..... **xv**

LIST OF FIGURES ..... **xvii**

ACRONYMS ..... **xix**

Chapter 1: INTRODUCTION **1**

1.1 Purpose statement 1

1.2 Context of the study 1

1.3 Problem statement 6

1.4 Main research objective 7

1.5 Specific objectives 7

1.6 Research questions 7

1.7 Hypotheses 8

1.8 Significance of the study 8

1.9 Justification for the study 9

1.10 Conceptual framework 9

1.11. Theoretical model 11

1.12 Description of study variables 14

Chapter 2: LITERATURE REVIEW 16

2.1 Introduction 16

2.2 Nature of psychological capital resources 16

2.2.1 Hope 18

2.2.2 Self-efficacy 18

2.2.3 Optimism 19

2.2.4 Resilience 19

2.2.5 Psychological capital 20

2.3 Emotional intelligence (EI) theory 21

2.3.1 Models of individual emotional intelligence (EI) 21

2.3.2 Group emotional intelligence (GEC) 24

2.3.3 Organisational emotional intelligence (OEI) 26

2.4 Organisational emotional intelligence and positive workplace PsyCap 29

2.5 Dimensions of organisational emotional intelligence and positive workplace PsyCap 31

2.5.1 Job happiness and psychological capital 31

2.5.2 Compensation satisfaction and psychological capital 32

2.5.3 Organisational work–life balance and psychological capital 33

2.5.4 Supervisory leadership and psychological capital 33

2.5.5 Organisational cohesiveness and psychological capital 34

2.5.6 Organisational responsiveness and psychological capital 34

2.5.7 Organisational diversity and psychological capital 35

2.5.8 Organisational positive impression and psychological capital 35

2.6 Conclusion 35

Chapter 3: RESEARCH METHODOLOGY 37

3.1 Introduction 37

3.2 Philosophical background to the study 37

3.2.1 Phenomenological research paradigm 37

3.2.2 Positivistic paradigm 38

3.2.3 Triangulation of the research 39

3.3 Research design 40

3.4 Qualitative and quantitative research 41

3.5 Deductive and inductive research 42

3.6 Basic and applied research 42

3.7 Population 43

3.8 Sample size 43

3.9 Sampling procedure 44

3.10 Unit of analysis 45

3.11 The research instrument 45

3.11.1 Psychological capital 46

3.11.2 Organisational emotional intelligence 48

3.12 Control variables 50

3.13 Designing and pre-testing the instrument (questionnaire design) 50

3.14 Reliability 55

3.15 Validity 58

3.16 Data management 61

3.16.1 Missing values 61

3.16.2 Outliers 62

3.16.3 Normality 63

3.16.4 Homoscedasticity 64

3.16.5 Linearity 64

3.16.6 Multicollinearity 65

3.17 Confirmatory factor analysis 65

3.17.1 Job happiness measurement model 66

3.17.2 Compensation satisfaction measurement model 68

3.17.3 Work–life balance measurement model 70

3.17.4 Organisational cohesiveness measurement model 72

3.17.5 Supervisory leadership measurement model 74

3.17.6 Diversity and anger management measurement model 76

3.17.7 Organisational responsiveness measurement model 79

3.17.8 Organisational positive impression measurement model 82

3.17.9 Organisational emotional intelligence measurement model 84

3.17.10 Psychological capital measurement model (DV) 87

3.18 Structural Equation Modelling 89

3.19 Research ethical values 92

Chapter 4: PRESENTATION AND INTERPRETATION OF RESULTS 93

4.1 Introduction 93

4.2 Sample characteristics 95
4.2.1 Response rate 95
4.2.2 Study participants by public sector category 95
4.2.3 Study participants by functional department 96
4.2.4 Study participants by gender 97
4.2.5 Study participants by age 98
4.2.6 Response rate in terms of educational level 99
4.2.7 Response rate in terms of public service work experience 99
4.2.8 Descriptive statistics on study variables 100
4.3 Correlation analysis of study variables 101
4.4 Structural equation model 106
4.5 Overall organisational emotional intelligence and psychological capital dimensions 110
4.6 Overall organisational emotional intelligence and psychological capital 114
4.7 Dimensions of organisational emotional intelligence on psychological capital 117
4.8 Summary interpretation of study hypotheses 121
4.8.1 Overall organisational emotional intelligence and psychological capital 121
4.8.2 Job happiness and psychological capital 122
4.8.3 Compensation satisfaction and psychological capital 122
4.8.4 Work–life balance and workplace psychological capital 122
4.8.5 Organisational cohesiveness and employee psychological capital 123
4.8.6 Supervisory leadership and psychological capital 123
4.8.7 Diversity management and psychological capital 123
4.8.8 Organisational responsiveness and psychological capital 124
4.8.9 Organisational positive impression and workplace psychological capital 124

4.9 Summary of study findings 126

Chapter 5: DISCUSSION OF FINDINGS 129

5.1 Introduction 129

5.2 Organisational emotional intelligence and psychological capital 129

5.3 Dimensions of organisational emotional intelligence and psychological capital 131

5.3.1 Job happiness and psychological capital 132

5.3.2 Compensation satisfaction and psychological capital 133

5.3.3 Work–life balance and psychological capital 134

5.3.4 Supervisory leadership and psychological capital 135

5.3.5 Organisational cohesiveness and psychological capital 136

5.3.6 Diversity management and workplace psychological capital 136

5.3.7 Organisational responsiveness and psychological capital 137

5.3.8 Positive impression and psychological capital 138

5.4 Conclusion 139

Chapter 6: CONCLUSIONS, IMPLICATIONS AND RECOMMENDATIONS 140

6.1 Introduction 140

6.2 Conclusions 140

6.2.1 Organisational emotional intelligence and psychological capital 140

6.2.2 The separate dimensions of OEI and PsyCap 141

6.3 Contribution/implications 142

6.3.1 Theoretical implications 142

6.3.2 Empirical contribution 144

6.3.3 Methodological contribution 146

6.3.4 Managerial implications 147

6.5 Recommendations 151

REFERENCES 153

APPENDICES 166

LIST OF TABLES

Table 2.1 Theoretical psychological resources 17

Table 2.2 Dimensions of organisational emotional intelligence 28

Table 3.1 Psychological capital rotated component matrix 53

Table 3.2 Job happiness rotated component matrix 54

Table 3.3 Summary statistics for job happiness 67

Table 3.4 Summary statistics for compensation satisfaction 69

Table 3.5 Summary statistics for work–life balance measurement model 71

Table 3.6 Organisational cohesiveness measurement model 73

Table 3.7 Summary statistics for supervisory leadership measurement model 75

Table 3.8 Summary statistics for diversity and anger management measurement model 77

Table 3.9 Summary statistics for organisational responsiveness measurement model 79

Table 3.10 Summary statistics for organisational positive impression measurement model . 82

Table 3.11 Summary statistics for OEI measurement model 84

Table 3.12 Summary statistics for PsyCap measurement model 87

Table 4.1 Response rate 95

Table 4.2 Study participants by public service sector 96

Table 4.3 Participants by functional department 97

Table 4.4 Gender of study participants 98

Table 4.5 Age of respondents 98

Table 4.6 Educational level of respondents 99

Table 4.7 Public service work experience 100

Table 4.8 Descriptive statistics for study variables..... 100

Table 4.9 Correlations between OEI, its dimensions and psychological capital 103

Table 4.10 Summary of regression analysis results (OEI dimensions on PsyCap) 105

Table 4.11 Summary statistics for SEM demographics and psychological capital 107

Table 4.12 SEM summary statistics for overall OEI and dimensions of PsyCap..... 111

Table 4.13 Final SEM summary statistics for overall OEI and PsyCap 114

Table 4.14 Summary statistics for initial SEM for OEI dimensions and PsyCap 117

Table 4.15 Summary statistics for final SEM for OEI dimensions and PsyCap 118

Table 4.16 Summary of findings for tested hypotheses..... 125

LIST OF FIGURES

Figure 1.1 Advancement of human capital for competitive advantage 3

Figure 1.2 Conceptual framework ..... **Error! Bookmark not defined.**

Figure 2.1 Correlates of emotional intelligence and psychological capital 30

Figure 3.1 CFA job happiness measurement model 68

Figure 3.2 CFA compensation satisfaction measurement model 70

Figure 3.3 CFA work–life balance measurement model 72

Figure 3.4 CFA organisational cohesiveness measurement model 74

Figure 3.5 CFA supervisory leadership measurement model 76

Figure 3.6 CFA diversity and anger management measurement model 78

Figure 3.7 CFA organisational responsiveness measurement model 81

Figure 3.8 CFA positive impression measurement model 83

Figure 3.9 CFA OEI measurement model 86

Figure 3.10 CFA psychological capital measurement model 88

Figure 4.1 Initial SEM control variables in the model of OEI and PsyCap 108

Figure 4.2 Final SEM demographic variables (Education) on PsyCap 109

Figure 4.3 OEI and psychological capital dimensions 113

Figure 4.4 SEM overall OEI and PsyCap 116

Figure 4.5 Final SEM education, OEI dimensions and PsyCap 120

Figure 4.6 Hypothetical and empirical model of overall OEI, its dimensions and PsyCap . 127

Figure 6.1 Final SEM OEI dimensions and PsyCap 146

ACRONYMS

AMOS:	Analysis of Moment Structure
AVE:	Average Variance Expected
BOEI:	Benchmark of Organisational Emotional Intelligence
C/MIN/DF:	Ratio of Chi-Square and Degree of Freedom
CFA:	Confirmatory Factor Analysis
CFI:	Comparative Fit Index
CR:	Composite Reliability
CS:	Compensation Satisfaction
DF:	Degree of Freedom
DI:	Diversity Management
EFA:	Exploratory Factor Analysis
EI:	Emotional Intelligence
GDP:	Gross Domestic Product
GFI:	Adjusted Goodness of Fit Index
GFI:	Global Fit Index
GFI:	Goodness of Fit Index
HR:	Human Resources
HRM:	Human Resource Management
IFI:	Incremental Fit Index
JH:	Job Happiness
MI:	Modification Index
NFI:	Normed Fit Index
OC:	Organisational Cohesiveness
OEI:	Organisational Emotional Intelligence
OR:	Organisational Responsiveness
PCQ:	Psychological Capital Instrument
PI:	Positive Impression
POC:	Positive Organisational climate
PsyCap:	Psychological Capital
RMSEA:	Root Mean Square of Approximation

SEM:	Structural Equation Modelling
SL:	Supervisory Leadership
TLI:	Tucker Lewis Index
US:	United States
VIF:	Variance Inflation Factor
WL:	Work–life Balance
X^2:	Chi-Square

CHAPTER 1: INTRODUCTION

1.1 Purpose statement

This thesis examined the predictive potential of each dimension of organisational emotional intelligence (OEI); namely, job happiness, compensation satisfaction, supervisory leadership, organisational cohesiveness, organisational responsiveness, organisational diversity–anger management, work–life balance management and organisational positive impression on employee psychological capital (PsyCap) among employees in public service in Uganda.

1.2 Context of the study

Uganda is a developing economy in East Africa with a population estimated at 36.8 million people, a Gross Domestic Product (GDP) of 23.1 (US$ billions), and GDP per capita of 626 (US$), according to the Global Competitiveness Report (2014-2015). Uganda's vision is to transform her society from a peasant economy to a modern prosperous economy by 2040 (Uganda Vision Report, 2013). Two of Uganda's envisioned attributes are knowledge and a skilled workforce. However, the State of Uganda Population Report (2010) labels Uganda's labour force as the most unproductive among East African Community states; the country is reportedly faced with widespread corruption, ranked 122nd out of 144 most corrupt countries, with an inadequate skilled workforce, a poor work ethic among the national labour force, amidst an inefficient government bureaucracy (Global Competitiveness Report, 2014-2015). Moreover, although the figures are contested, the Uganda Population Report of 2010 estimated that Uganda's workforce was 28% and 86% less productive than the Tanzanian and Kenyan workforce respectively (Uganda Population Report 2010).

The Uganda Vision 2040 further notes that the country experiences critical skills gaps, a technology deficiency, a lack of creativity and innovation, low productivity and negative attitudes towards work. Yet, notably, countries like the Asian Tigers (Malaysia, Hong Kong, Singapore, South Korea) used human resources to transform the economy by acquiring and applying the latest skills, technology and training as used in America, Japan and Western European countries, to foster economic growth, as well as applying positive attitudes and cultural strengths to facilitate social transformation (Uganda Vision Report, 2013).

PsyCap has been established as an important human resource that influences positive workplace outcomes (Avey, Reichard, Luthans and Mhatre, 2011). PsyCap encapsulates several personal attributes likely to influence employee morale and productivity (Marilyn, 2009), it is a pre-requisite for individual and organisational success (Du Plessis and Barkhuizen, 2011; Kalla, 2015), and produces a sustainable competitive advantage for organisations (Toor and Ofori, 2010). PsyCap has several advantages at all levels including employees, leaders, and organisations (Toor and Ofori, 2010). Thus, Uganda requires public servants with positive PsyCap to contribute to the achievement of her 2040 vision. However, little is known on what determines PsyCap (Avey, 2014).

Psychological capital has been defined as a positive attitude towards one's life and work, characterised by hope, efficacy, optimism and resilience (Luthans and Youssef, 2007; Sridevi and Srinivasan, 2012). PsyCap is rooted in the positive psychology behaviour theory, where human capital theory has been the central focus of organisational competitive advantage, through the value placed on employees' knowledge, skills and attitudes as important intangible assets (Barney, Ketchen and Wright, 2011). Traditionally, human resource professionals and other business managers have focused on human capital in terms of knowledge, skills, and

specific competencies of individual employees in building business efficiency (Luthans and Youssef, 2004). Further search for factors that could lead to a competitive advantage suggested the concept of social capital in terms of resources such as relationship with colleagues, partners, and customers, networks of contacts and level of trust Luthans, Luthans, and Luthans, 2004). Proponents of PsyCap argue that the human resource function should value human capital and social capital equally as they are the 'building blocks' of an effective organisation. However, in addition to human and social capital, empirical evidence suggests that psychological capital is superior to other forms of human capital in explaining work attitudes, behaviours and performance (Luthans et al., 2007). The evolution of the various understandings of human capital is summarised in figure 1.1.

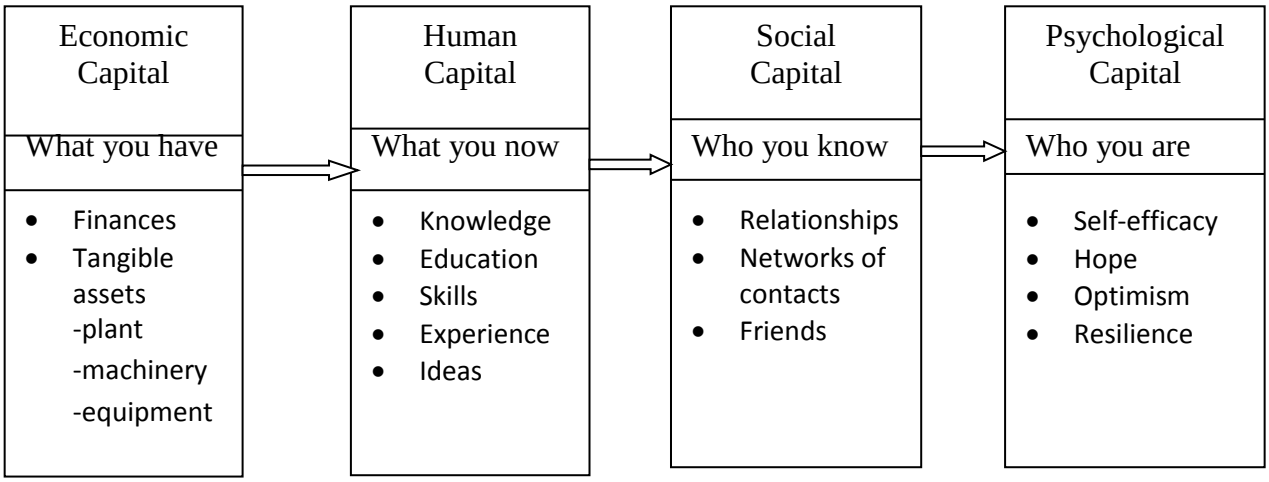

Source: Luthans, Luthans and Luthans (2004)

Figure 1.1 Advancement of human capital for competitive advantage

Proponents of psychological capital theory (Larson and Luthans, 2006; Luthans, Avolio, Walumbwa and Li, 2005; Avey, Luthans and Youssef, 2010; Luthans, Avey, and Peterson, 2010; Peterson, Luthans; Avolio, Walumbwa and Zhang, 2011; Avey et al., 2011a) provide

empirical evidence that PsyCap influences workplace attitudes, behaviours and performance. Specifically, among other positive consequences, the multidimensional nature of PsyCap influences commitment to organisational mission (Luthans and Jensen, 2005); workplace satisfaction and commitment (Larson and Luthans, 2006); organisational citizenship behaviour (Gooty, Gavin, Johnson, Fazier and Snow, 2009); workplace satisfaction and commitment, and psychological well-being (Luthans and Palmer, 2010; Cetin, 2011); employee well-being (Luthans, Smith and Palmer, 2010); individual, team and organisational performance (Avey, Patera and West, 2006); employee performance (Peterson, Luthans, Avolio, Walumbwa and Zhang, 2011); and learning organisations (Sweet, 2012).

A meta-analysis by Avey et al. (2011a) established that PsyCap influences several individual and organisational outcomes. However, other scholars (Walumbwa, Luthans, Avey and Oke, 2011; Han, Brooks, Kakabadze, Peng and Zhu, 2012; Sridevi and Srinivasan, 2012; Sahin, Cubuk and Uslu, 2014) claim that what determines PsyCap has been understudied. Current literature suggests that PsyCap and its components can be developed through training individuals (Luthans, Avey, Clapp-Smith and Li, 2008); charismatic leadership (Glynn and Dowd, 2008); transformational leadership (Gooty et al., 2009); authentic leadership (Walumbwa et al., 2011); organisational climate (Luthans, Norman, Avolio and Avey, 2008); leadership climate (McMurray, Pirola-Merlo, Sarros, 2010); leadership styles (Venters, 2012); organisational prestige (Kimberly and Scott-Halsell, 2012); some personal factors (Venters, 2012; Sahin et al., 2013;Avey, 2014); and supervision (Avey, 2014).

However, a knowledge gap still exists about other antecedents of PsyCap (Walumbwaet al., 2011; Han, Kakabadse and Kakabadse, 2012; Sridevi and Srinivasan, 2012, Dawkins, Martins, Scott and Sanderson, 2013; Avey, 2014, Kalla, 2015). This study is a response to these

scholarly calls for further studies on the determinants of workplace PsyCap. The study makes a contribution by focusing on the influence of the dimensions of organisational emotional intelligence on PsyCap. Whereas psychological capital has been established as a psychological resource and its theory has been developed since 2002 (mainly by Luthans and his associates), as an important variable that supplements human capital and social capital in influencing positive workplace outcomes, few studies are known that have tested theory/models of psychological capital. This study was designed to fill this gap (Avey, 2014; Darwin et al., 2013, Sahin et al., 2013), by testing Stein's (2005) model of the association between organisational emotional intelligence and psychological capital.

The emerging theory of organisational emotional intelligence has been established to influence operational performance, financial performance, innovative performance and involuntary absence (Merges and Bruch, 2009); and health, satisfaction and workplace performance (Giorgi, 2013). Studies in understanding how emotional intelligence influences organisational outcomes, especially in developing countries, have been recommended (Joseph and Newman, 2010). Based on recent empirical evidence, both organisational emotional intelligence and psychological capital influence positive workplace outcomes (Merges and Baruch, 2009; Giorgi, 2013; Avey et al., 2011a). This study posited that the two variables (OEI and PsyCap) are associated with each other.

Notably, research on PsyCap has focused mostly on the positive organisational outcomes of PsyCap (Avey et al., 2011a) with fewer studies examining the determinants of PsyCap (Avey et al., 2011a; Venter, 2012; Sridevi and Srinivasan, 2012; Sahin et al., 2013; Avey, 2014, Newman, Ucbasaran, Zhu and Hirst, 2014). Thus, the motivation for this study is to make a contribution

on ‘what lies on the left’ of PsyCap, by testing a model of organisational emotional intelligence and employee PsyCap among public servants in Uganda.

It is imperative for researchers to expand the scope of the determinants of PsyCap in order to increase its potential in organisations.

1.3 Problem statement

Prior research in understanding determinants of PsyCap has provided evidence of human capital theory (Venters, 2012), upper echelons theory (Gooty et al., 2009, Walumbwa, Avolio and Zhu, 2008; Walumbwa et al., 2011) in explaining PsyCap. However, other theories to explain psychological capital predictors remain largely unexplored (Donaldson and Ko, 2010; Luthans, Avey and Peterson, 2010; Avey et al., 2011; Han et al., 2012; Sridevi and Srinivasan, 2012; Sahin et al., 2013; Avey, 2014). While previous studies on organisational emotional intelligence indicate that collective emotional intelligence influences team performance (Koman and Wolff, 2008), operational, innovative performance (Merges and Bruch, 2009), trust (Pomraning, 2010), leadership effectiveness (Lindebaum and Cartwright, 2011), and employee performance (Giorgi, 2013), it was not known whether organisational emotional intelligence is associated with PsyCap, and which dimensions of OEI are important predictors of PsyCap.

Thus, a model of organisational emotional intelligence and psychological capital was tested using the perceptions of employees in the public sector in Uganda, which includes the central government ministries, government department and public agencies (Auditor General Report, 2013). These organisations are mandated by an act of parliament to support government service delivery in different sectors of the economy in Uganda.

1.4 Main research objective

This quantitative, non-experimental, correlational and explanatory study examined the influence of dimensions of organisational emotional intelligence on employees' PsyCap. The independent variables of the study are employee perceptions on organisational emotional intelligence dimensions, while the dependent variable is psychological capital, reported by the employees.

1.5 Specific objectives

In order to understand the main objective the following key objectives guided the study:

1. To investigate whether a significant positive association existed between organisational emotional intelligence (OEI) and employee psychological capital (PsyCap) among public servants in Uganda.
2. To examine the association between each dimension of organisational emotional intelligence and employee psychological capital among public servants in Uganda (that is, the predictive potential of each dimension of OEI on PsyCap.

1.6 Research questions

In order to understand the key research objectives the following key research questions were asked to guide the study:

RQ1: Is there a relationship between employee-rated overall organisational emotional intelligence (OEI, measured by Stein, 2005) and employee psychological capital (PsyCap, measured by Luthans and Youssef, 2007) among public servants in Uganda?

RQ2: Which dimensions of organisational emotional intelligence: job happiness, compensation satisfaction, diversity and anger management, supervisory leadership,

organisational responsiveness, organisational cohesiveness, impression management positively influence/predict employee psychological capital among public servants in Uganda?

1.7 Hypotheses

In order to answer the research questions the following key hypotheses were formulated to guide the study:

H_1: Employee-rated overall organisational emotional intelligence (OEI) is positively associated with employee psychological capital (PsyCap) among public servants.

H_2: Each employee-rated dimension of organisational emotional intelligence is positively associated with employee psychological capital among public servants.

1.8 Significance of the study

This study advances knowledge on the organisational emotional intelligence and psychological capital theory by testing their model fit, using structural equation modelling (SEM). PsyCap has received important and increasing attention in many organisations, given the turbulent economic times (Bardoel, Pettit, Cieri and McMillan, 2014; Kalla, 2015). This study is important for human resource professionals, public administrators and academicians. Empirical studies on emotional intelligence as antecedents of positive employee psychological capital are currently limited, in both the private and public sector (Joseph and Newman, 2010). By identifying the dimensions of organisational emotional intelligence that predict employee psychological capital, this study provides practical policy implications for human resource professionals and public administration stakeholders to craft policies that drive positive organisational behaviour. In addition, the study creates knowledge for further studies (Dawkins et al., 2012; Avey, 2014) on emotional and psychological capital.

Further, the study makes a methodological contribution by providing a structural equation model (SEM) for organisational emotional intelligence dimensions and psychological capital.

1.9 Justification for the study

Most researchers on positive workplace psychological capital have had United States (US) affiliations (Donaldson and Ko, 2010; Walumbwa, Peterson, Avolio and Hartnell, 2010; Avey et al., 2011), with the majority of studies based in developed western countries (Avey et al., 2011). Though some studies have started to appear in emerging efficiency-driven economies like China (Sridevi and Srinivasan, 2012; Han et al., 2012), and South Africa (Du Plessis and Barkhuizen, 2011), and some factor-driven economies like Kenya (Walumbwa et al., 2010), more studies on PsyCap in other factor-driven economies of sub-Saharan Africa such as Uganda are needed.

The prime contribution of this study is in understanding of the model fit of organisational emotional intelligence and psychological capital theory; that is, the important organisational emotional intelligence dimensions that predict employee psychological capital.

1.10 Conceptual framework

Organisational emotional intelligence and psychological capital are important organisational resources that require understanding in public organisations (Joseph and Newman, 2010). There is a potential of organisational emotional intelligence leading to the development of psychological capital. The conceptual model of organisational emotional intelligence dimensions and psychological capital is represented in figure 1.2.

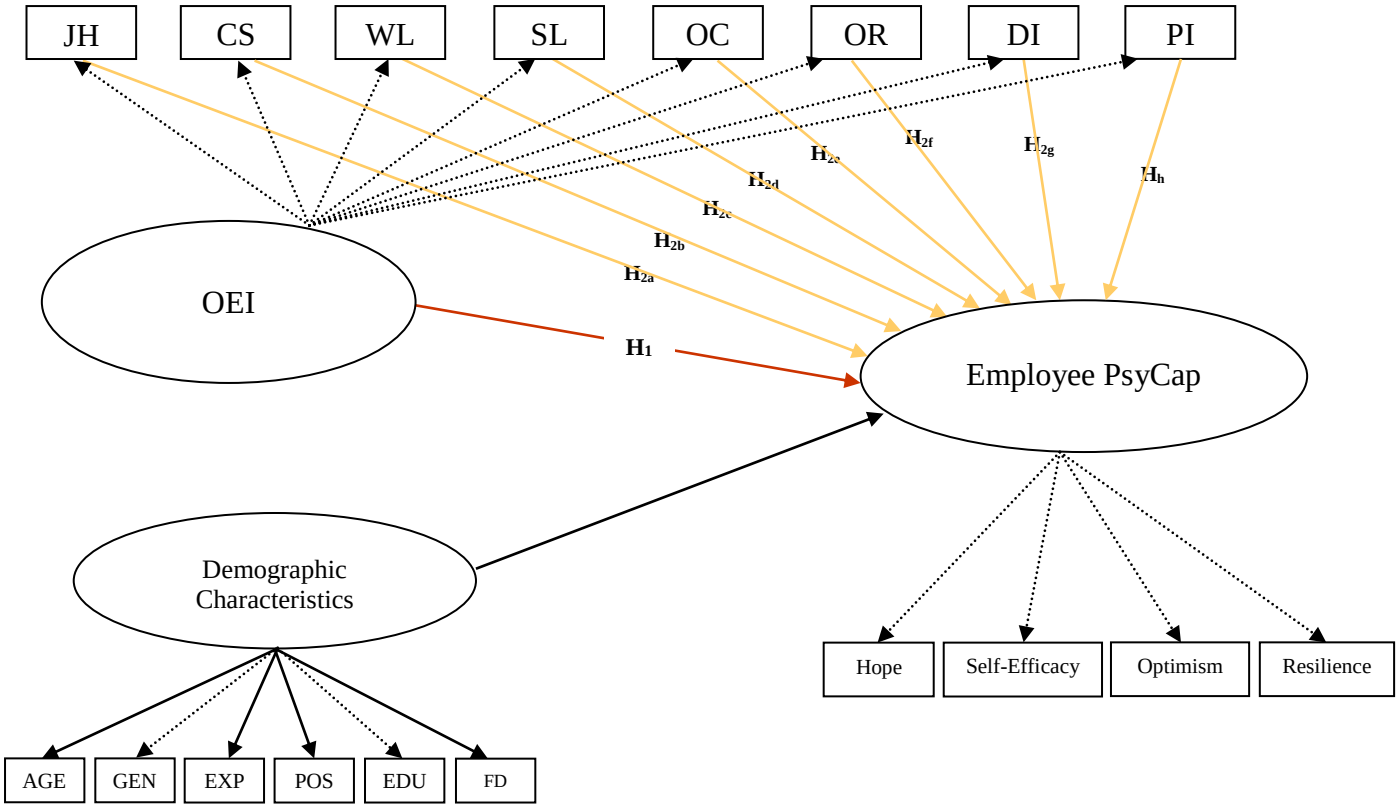

Figure 1.2 Conceptual framework

This conceptual model depicts positive employee psychological capital; with its dimensions of hope, efficacy, optimism and resilience, as influenced by organisational emotional intelligence on psychological capital (H_1); and the influence of OEI dimensions, namely job happiness (JH), compensation satisfaction (CS), work–life management (WL), supervisory leadership (SL), organisational cohesiveness (OC), or organisational responsiveness (OR), diversity management (DI) and positive impression (PI) on psychological capital. The OEI dimensions are the independent variables, while PsyCap is the dependent variable. The demographic factors,

namely age, gender, educational level, experience, managerial position, department function and public service sector, are included in the hypothetical model as control variables.

1.11. Theoretical model

Luthans and Youssef (2002) advanced the positive organisational behaviour theory, which seeks to understand human functioning in the workplace via a positive lens. Anchored within positive organisational behaviour theory, this study conceptualises a model of organisational emotional intelligence and employee psychological capital. The study holds that positive individual perceptions on overall organisational emotional intelligence (OEI) and its dimensions are associated with positive employee psychological capital (PsyCap).

The study is grounded in the theory of emotional intelligence. Emotional intelligence has been a focus of some researchers and practitioners for some time, with different models, conceptualisations and contradictory findings on individual and organisational success (Cherniss, 2010; Nafukho, 2016). At the individual level "emotional intelligence is socially constructed as a set of interpersonal resources within a person" (Salovey et al., 2008); at group level as norms within groups or teams (Druskat and Wolff, 2008); and at organisation level as aggregated individual or team emotional intelligence (Menges and Bruch, 2009; Giorgi, 2013), or perceptions of individuals on the emotional and social climate of an organisation (Stein, 2005). This study focused on the organisational level of emotional intelligence (OEI), using Stein's (2005) model of conceptualisation. It has been found to correlate with known measures of emotional intelligence (Stein, 2005).

Organisational emotional intelligence is conceptualised differently by different researchers. For instance, there is a four-construct variable that incorporates self-emotional appraisal, emotional

appraisal of others, the use of emotions, and regulation of emotions (Merges and Bruch, 2009). Another four-construct variable is composed of organisational awareness, self-management, social awareness and relationship management (Giorgi, 2013). Stein (2005)proposes an eight-variable model of organisational emotional intelligence composed of job happiness, compensation satisfaction, work–life balance, organisational cohesiveness, supervisory leadership, diversity acceptance, organisational responsiveness and organisational positive impression (Stein, 2005). Stein's (2005) organisational emotional intelligence, organisational culture and organisational climate are distinguished in what follows.

Literature offers a variety of definitions of organisational culture (OC). For instance, Schein (1992), one of the renowned scholars in organisational culture, described organisational culture as the shared beliefs, ideologies, rituals, myths and norms that influence organisational behaviours or actions. Triandis (2007) described culture as an individual's way of perceiving the man-made part of one's environment, involving the perception of rules, roles and values, and its influence on interpersonal behaviour. Thus, organisational culture is concerned with the collective values, beliefs, assumptions, behaviours, expectations, and philosophy that hold the organisation together. OC dictates the way people and group interact with each other, how much employees identify with an organisation, and how they perform their duties. Studies by Pareek (1997) developed the OCTAPACE measure of OC to include openness, confrontation, trust, authenticity, pro-action, autonomy, collaboration, and experimentation as factors of organisational culture. In contrast, positive organisational climate (POC) refers to a collection of attitudes of an organisation that affect individuals and groups, including rewards and interpersonal skills (Suresh and Venkatammal, 2010), while Gholami, Keykale, Tir, Ramandi, Karimi and Rajaee (2015) describe organisational climate as perceptions of employees regarding

an organisation's features such as leadership style, decision-making process and work norms. Suresh and Venkatammal (2010) listed reward and interpersonal skills, organisational processes, results, altruistic behaviour, clarity of roles and sharing information as dimensions of POC. In a study on organisational climate and organisational citizenship behaviour (OCB) with PsyCap as a moderator, an organisational climate questionnaire (OCQ) was developed by Koys and DeCotiis (1991), with the dimensions of cohesion, autonomy, trust, support, pressure, fairness, recognition, and supervisor encouragement of innovation (Suifan, 2015). In Uganda, organisational climate has been identified in terms of experiences of job-related climate, supervision-related experiences, and reward-related experiences associated with work performance (Kasekende, 2014). In further contrast, Stein's conceptualisation of organisational emotional intelligence focuses on the emotional and social culture of the organisation's effective and efficient functioning. Therefore, there may be some conceptual overlaps between organisational culture, which focuses on a system of shared values that defines members' appropriate attitudes and behaviours (Triandis, 2007), organisational climate which focuses on the job reward and supervisory experiences of an employee (Kasekende, 2014), and organisational emotional intelligence, which focuses specifically on emotional and social experiences of employees in relation to their workplace (Stein, 2005). This study focused on analysing the influence of the organisational emotional and social climate, as perceived by employees from public sector organisations in Uganda, on employee psychological capital, as perceived by employees.

In this study employee psychological capital, adapted from Luthans et al. (2007), is conceptualised as employee self-confidence in performing one's work (self-efficacy); the belief that one will succeed in the present (optimism) and in the future (hope); and persevering amidst

challenges or opportunities in the workplace (resilience). It has been confirmed that this influences positive employee outcomes including commitment, satisfaction, performance, organisational citizenship behaviour and well-being (Avey, 2014).

Although the theory of positive psychological capital is still open to development, this study, in line with Luthans et al. (2007), has established that the psychological resources that conform to the criteria to be considered as constructs of the psychological capital variable are hope, optimism, resilience and self-efficacy.

1.12 Description of study variables

Based on the works of previous scholars, the concepts for this study are conceptualised as follows. For employee positive psychological capital (PsyCap) this study uses the definition by Luthans and Youssef (2007):

> the positive perceptions, attitudes and behaviours of employees in life and at work, characterised by their levels of confidence, optimism, hope, and resilience in setting and pursuing their goals with the expectation of success (ambition); how they create pathways to succeed with resilience; and how, when confronted by challenges or opportunity, they are even more resilient to solve the challenges, or in the case of failure bounce back with more vigour to succeed in the future.

For organisational emotional intelligence (OEI), this study uses Stein's (2005) model. Stein describes OEI as:

> the collection of behaviours, feelings, motivations, perceptions and attitudes of employees, and their workgroup affective relationships, or the organisation's ability to cope with organisational changes; achieve organisational goals, and maintain sensitive responsibility to organisational stakeholders, including employees, customers, suppliers, networks and society (Stein, 2005). Stein's organisational emotional intelligence model includes job happiness (JH), compensation satisfaction (CO), diversity and anger

management (DI), supervisory leadership (SL), organisational responsiveness (OR), organisational cohesiveness (OC), work–life balance (WL) and positive impression (PI).

This chapter has provided the rationale for this study; the next chapter reviewed existing literature on organisational emotional intelligence and psychological capital.

CHAPTER 2: LITERATURE REVIEW

2.1 Introduction

In this section, literature on key theories, models and empirical findings on the interrelationship between positive organisational emotional intelligence constructs and employee psychological capital constructs will be discussed. The review focused on how the study variables have been conceptualised by other researchers, the different models and the preferred model, which is critical for understanding the determinants of employee psychological capital.

2.2 Nature of psychological capital resources

Due to the global economy becoming increasingly knowledge-based, the acquisition and development of superior human capital has emerged as a critical resource for viable organisational success (Crook, Todd, Combs, Woehr and Ketchen, 2011). Previously, the main focus of organisational human capital (Adu-Febiri, 2006) was viewed as the employees' knowledge, skills and expertise, which depend on education and work experience. Notably, employees with more education and extensive work experience, and who continually upgrade themselves, are worth more to their employers (Alpkan, Bulut, Gunday, Ulusoy and Kilik, 2010).

Thus the key components of human capital in the workplace have in the past been considered to be intellectual capital, social capital and emotional capital, whereas today emphasis is also given to psychological capital, defined as "an individual positive psychological state of development in an organisation" (Luthans, Youssef, and Avolio, 2007). Luthans (2002) argues that psychological capital (who we wish to be) is more important than what we know (human capital)

or whom we know (social capital), in terms of our life and work success. Han et al. (2012) listed the following as potential psychological resources for competitiveness in life and the workplace.

Table 2.1 Theoretical psychological resources

Dimension	Meaning
Self-efficacy	The belief that one possesses the ability, required knowledge, skills and attitude to succeed in one's personal and work life, or in a particular task
Hope	A positive motivation based on successful goal-directed energy (agency) and persevering towards goals, redirecting pathways, if necessary, to attain a goal
Optimism	The belief that one will succeed in the current situation and in the future
Resilience	The ability to recover easily from a challenging situation and return to pursue the set goal with even more energy and rigour for success
Creativity	Expertise in finding new ways of solving everyday challenges, or in adapting new ideas and processes to improve oneself and others
Wisdom	The expertise to handle the practical issues in one's life, with the ability to discern right and wrong
Subject well-being	Encompasses one's emotional, social and psychological well-being
Courage	A form of social life in which an individual is driven by his/her beliefs to govern his behavior
Flow	A state of being fully focused and engaged in what one is doing, and being completely involved and immersed in it
Humour	The ability to recognise and respond to what is amusing, and the ability to produce such a positive cognitive or affective response from others
Gratitude	Showing positive psychological responses to benefits one has experienced
Forgiveness	The ability to respond positively and overcome an injury inflicted by another person and act in the future as if nothing had happened
Spirituality	The belief that there is an inner strength that nourishes one towards a meaningful and purpose-driven personal, work or community life
Authenticity	The ability to depend on personal conviction derived from one's personal experiences, and understand or be understood by others as to how one will behave, based on one's personal values and convictions not group pressure

Adapted from Han et al., 2012

Although there is potential to expand psychological resource theory to include the dimensions listed above and others such as humility, self-possession, sincerity, well-being and wisdom and (Luthans et al., 2007; Han et al., 2012), only the four constructs of hope, optimism, efficacy and resilience, so far, meet criteria to be as the superior constructs of psychological capital (Avey et al., 2010). Some authors have also argued for a five-factor model of PsyCap by considering way

power and willpower as separate constructs of hope (Rego, Marques, Leal, Sousa and Cunha, 2010). Each of the constructs of PsyCap is now explained:

2.2.1 Hope

Hope is described by Synder, Sympson, Ybasso, Borders, Babyak and Higgins (1996) as positive motivation supported by "goal-directed energy (agency) to meet planned goals (pathways)". Thus the dimensions of hope in an organisation include the willpower (agency) to attain set goals, and the pathways ('way power') that provide alternative ways to attain those goals (Luthans, 2002). The agency component of hope can be interpreted as the will to accomplish a task or goal, thus it includes the motivation or goal-directed energy to succeed at a given task in a specific context, while the pathway component is interpreted as the means to accomplish a task or goal; combined they form the will and the way to accomplish a given task or goal (Synder et al., 1996). In other words, to possess hope, one must have both the will to succeed at a given task, and feasible ways to accomplish the task or set goals.

In the workplace, hope has been found to be associated with employees' performance among factory workers in China (Luthans, Avolio, Walumbwa and Li, (2005), employee satisfaction, happiness, commitment and performance (Youssef and Luthans, 2007).

2.2.2 Self-efficacy

Self-efficacy in the workplace is understood as confidence in one's ability to carry out a task or to cope with a particular situation (Bandura, 1977). Stajkovic and Luthans (1998) refer to self-efficacy in an organisation context as an employee's conviction (confidence) about his ability to mobilise the motivation, cognitive resources and course of action needed to successfully execute a specific task with a given context. In other words, confidence in oneself contributes to

achieving at work. Self-efficacy can be developed: 1) when an employee experiences success (through mastery of knowledge or tasks), 2) through observing others succeed at a task (vicarious modelling), 3) by being persuaded to succeed through receiving positive feedback, and 4) through physiological and/or psychological arousal and wellness (Bandura, 1977). In a meta-analysis, Stajkovic and Luthans (1998) found a strong positive relationship between self-efficacy and performance at work.

2.2.3 Optimism

Optimism is defined by Peterson (2000) as "a realistic appraisal of the situation at hand, and an understanding of what can be done with the resources available". To Seligman (1998), optimism involves viewing positive events as part of one's personal, permanent, recognised way of life, while considering negative events to be outside oneself, situations that will pass. Seligman gives as an example that optimists will attribute positive events such s a promotion to their own ability, but negative events such as layoffs to force such as economic depression. In the workplace, optimism has been shown to have a positive relationship with work-related performance, employee satisfaction, happiness and organisational commitment (Youssef and Luthans, 2007).

2.2.4 Resilience

Resilience is described by Luthans (2002) as the positive psychological mechanism that enables one to recover from any challenging situation including hardships, conflict and failure, as well as the ability to cope with potentially positive events such as progressively increased responsibility. Resilience is conceptualised by Bonanno (2004) as a response in circumstances where an individual has been exposed to subjectively significant threat, risk or harm, but adapts positively

and does not lose normal functioning. In other words, resilience is a positive response to challenging situations; often resulting in using such setbacks as opportunities to grow (Luthans et al. 2008). McDonald (2012) describes resilient leaders as leaders who recover quickly from setback, shock, injuries, stress or any other adversity, while maintaining organisational mission and focus. Empirical research has shown that resilience correlates positively with satisfaction, work happiness and organisational commitment (Avey et al., 2011, Bardoel, et al., 2014).

2.2.5 Psychological capital

Psychological resource theorists like Hobfolls (2002) posit that individual constructs may have discriminatory and predictive ability, and may be considered as indicators of an underlying key factor for enhanced benefits to the individual and organisations. Drawing from the works of resource theories, Luthans et al. (2007) propose hope, optimism, self-efficacy and resilience as constructs of psychological capital. They expand on Hobfolls' psychological resource theory (2002) by empirically establishing that there is an advantage in combining the various dimensions of intra-organisational variables into a construct of PsyCap (Luthans, Youssef and Avolio, 2007). They describe PsyCap as an individual's perceptions, thoughts, feelings and attitudes towards oneself, one's life and one's work, characterised by:

(1) having the confidence to undertake assignments, and to exert the required energy to succeed at demanding assignments;
(2) having the positive belief that one will succeed consistently on current assignments and other goals in the future (optimism);
(3) persistently pursuing goals, and making alternative pathways towards goals, so as to achieve success (hope); and

(4) if faced with overpowering challenges or difficulties, bouncing back with more vigour beyond the difficulty to sustain the opportunity to achieve more success (resilience).

Although it has been shown that the composite construct of PsyCap predicts work attitudes and behaviour (Luthans et al., 2007; Avey et al., 2011) beyond the individual constructs, few studies have reported on psychological capital in the public sector (Abbas, Raja, Darr and Bouckenooghe, 2012; Rego et al., 2010), in addition to the knowledge gap on what determines PsyCap (Newman, Ucbasaran, Zhu, Hirst, 2014). This study narrowed this knowledge gap by establishing which organisational emotional intelligence factors are important predictors of positive workplace psychological capital.

2.3 Emotional intelligence (EI) theory

Emotional intelligence (EI) is the learned capacity to recognise one's own feelings and those of others, in order to act wisely in any interpersonal situation or relationship. The theory of EI is rooted in the works of Thorndike (1920), advanced by Gardener (1983), who identified seven types of intelligence, namely: spatial, physical, musical, linguistic, logical-mathematical, intrapersonal and interpersonal. Alternative models of intelligence have been proposed by different scholars and practitioners, who have argued that emotional intelligence is a key variable for individual, team leadership and organisational success. Contradictory findings (Cherniss, 2010; Hams et al., 2010) led to more studies in the area (Giorgi, 2013; Priyadharshini and Rani, 2010; Afzaal and Afzaal, 2013, Nafukho, 2015).

2.3.1 Models of individual emotional intelligence (EI)

EI is a multifaceted concept that is conceptualised differently by different scholars, for example, Cherniss (2010). The following models have dominated research in emotional intelligence.

The Bar-On traits model (2006) of emotional intelligence recognises the traits and skills that people require to adapt to the social and emotional demands in life, including "the ability to understand one's self, and express one's self; the ability to understand and relate to others; the ability to deal with strong emotions, and control one's impulses; and the ability to adapt to change, and solve personal and social problems". The Bar-On model distinguishes the five dimensions of emotional intelligence as 1) intrapersonal skills, 2) interpersonal skills, 3) adaptability, 4) stress management and 5) general mood (Bar-On, 2006). To assess EI, the Emotional Quotient Inventory (EQ-i) self-report test is used (Bar-On, 1997).

Goleman's competency model of EI (Boyatzis and Goleman, 2006) is characterised by four clusters of emotional ability: 1) self-awareness, 2) self-management, 3) social awareness and 4) relationship management. In this model, the emotional competence inventory (ECI), and the emotional and social competence inventory (ESCI), both multi-rater instruments, are used to measure EI. This model was presented by Goleman as a performance model used to determine employee success in the workplace (Goleman, 1998).

The Mayer and Salovey (1997) emotional intelligence model also recognises four dimensions variable of emotional intelligence, in this case, the ability to 1) perceive emotions, 2) use emotions to facilitate thought, 3) understand emotions and 4) manage emotions. This model is currently measured using the Mayer-Salovey-Caruso emotional intelligence test (MSCEIT), which evaluates actual performance on a range of tasks by having the test-taker rate the emotional message expressed by a number of facial expressions (Mayer, Salovey, and Caruso, 2008).

The Petrides and Furnham (2003) trait EI model proposes the four components of:

- well-being (self-confidence, happiness and optimism)
- sociability (social competence, assertiveness and emotional management of others);
- self-control (stress management, emotion regulation and low impulsiveness); and
- emotionality (emotional perception of self and others, emotional expression and empathy).

These are measured by a self-report instrument described as the trait emotional intelligence questionnaire (TEIQUE), developed by Petrides and Furnham (2006).

Joseph and Newman (2010) introduced the term 'emotional capital' and proposed the ten dimensions of self-awareness, self-confidence, self-reliance, self-actualisation, assertiveness, relationship skills, empathy, self-control, flexibility and optimism.

Though there are disparities between these models of EI, which can be categorised as ability models or mixed models, both types are considered to be complementary rather than mutually exclusive. Most of the existing models of EI include the awareness, recognition and regulation of emotions for inter- and intra-personal purposes (Cherniss, 2010, Nafukho, 2016).

At an individual level, Jadhav and Mulla (2010) reported a significant relationship between emotional intelligence and job performance, after controlling for well-known determinants of job performance. Hammend and Torubelli (2011) empirically demonstrated the positive effect of combining the constructs of emotional intelligence and human relations management, with emotional intelligence explaining employee commitment better. Jorfi, Yacco and Shah (2012) also established a relationship between emotional intelligence, communication and job satisfaction in universities in Iran. Antony (2013) further established a correlation between

emotional intelligence, organisational commitment and organisational citizenship behaviour among working executives, while Afzaal and Afzaal (2013) established a significant relationship between organisational emotional intelligence, commitment and job satisfaction among academics.

2.3.2 Group emotional intelligence (GEC)

Jordan, Ashnakasy, Hartel and Hooper (2002) argued that EI at team level could be more important for performance, due to the socialisation process and social interactions, than EI at the individual employee or manager level. In line with this argument, some scholars (Jordanet al., 2002; Antonakis, Ashkanasy and Dasbourough, 2009) conceptualised group emotional intelligence as group emotional competence (GEC), defining GEC as a collection of competency norms that develop the relationship management of a group to collectively handle group challenges to achieve group tasks.

Jordan et al. (2002) proposed a group emotional intelligence comprising the individual categories of self-awareness, awareness of others, self-regulation and relationship management, aggregated from individual responses. Hamme (2003), however, conceptualised group emotional intelligence, based on Druskat and Wolff's (2001) work, as norms at the individual, team and organisational level. She argued that members of groups with high collaboration and cooperation may share their beliefs, supporting the growth of group emotional intelligence, including social capital conceptualised as mutual trust, and a sense of group identity and self-efficacy, leading to high group performance (Druskat and Wolff, 2005).

Druskat and Wolff (2005) conceptualised group emotional intelligence as comprising different norms at the individual, group and organisational level: understanding others, confronting

members who break norms, team evaluation, proactive decision-making, understanding the organisation and building networks. These are described more fully in what follows:

> (1) Understanding others comprises interpersonal understanding, confronting behaviour and caring behaviour. It is the understanding of team members' spoken and unspoken communication, and of their feelings, interests, concerns, strengths and weaknesses. Confronting behaviour involves open discussion of any issues that may arise, while caring behaviour means that team members behave towards each other with respect and appreciation (Druskat and Wolff, 2005).
>
> (2) Team awareness comprises team self-diagnosis. Members review their performance and compare themselves with other teams in order to improve. This includes accepting that emotions, and expressing and examining emotions, is part of team work; creating an affirmative environment for positivity and an optimistic outlook; and proactive problem-solving, that is, taking initiatives to anticipate problems and act in such as way as to avoid them (Druskat and Wolff, 2005).
>
> (3) Organisational understanding comprises team social awareness of their environment and the organisational system. Building networks includes helping other teams to make positive contacts with external constituencies, thus obtaining external support for securing the team's resources (Druskat and Wolff, 2005).

Jordan and Lawrence (2009) further conceptualised team emotional competence as team members' ability to understand their emotions (own awareness), to manage their emotions (own management), to understand the emotions of others in the team (others' awareness) and to manage the relationships in the team (others' management).

Ghuman (2011), however, criticised Druskat and Wolff's 2001 model of group emotional intelligence (GEC) for using a very long questionnaire. To counteract this shortcoming, Ghuman provided and tested a new model of understanding GEC that consisted of group emotional capability (GEC) and group relationship capability (GRC). In this model, he argued that groups

work well if they have developed norms of emotional management and a group level understanding of emotional perception, emotional understanding and successful utilisation of emotions towards group outcomes.

2.3.3 Organisational emotional intelligence (OEI)

Emotional intelligence has also been conceptualised at organisational level. The following are the emerging conceptualisations of organisational emotional intelligence (Stein, 2005, Chung-Liu and Chen, 2012; Merges and Bruch, 2009; Giorgi, 2013).

Stein (2005) conceptualised organisational emotional intelligence as the organisation's ability to cope with change and accomplish its goals effectively and efficiently, while maintaining responsibility and sensitivity to all its stakeholders – employees, customers, suppliers, networks and society. Stein's (2005) framework includes strategic and tactical organisational elements that encourage values that are helpful in creating and sustaining a sense of commitment and positive emotional bonding with employees. Stein describes the dimensions of OEI as follows:

(1) Job happiness is feelings of well-being and fulfillment, with workplace satisfaction and enjoyment.
(2) Compensation satisfaction is satisfaction with one's pay, bonuses, leave and benefits.
(3) Work–life stress management includes subscales on work–life balance, employee stability and stress management.
(4) Organisational cohesiveness covers the ability of co-workers to work in cohesive teams and get along well with team members, with subscales on teamwork, and co-worker relationships.

(5) The supervisory leadership dimension refers to is the general satisfaction of subordinates with supervisors' personal understanding of self-awareness, others' trustworthiness, and managing relationships

(6) Diversity and anger management includes openness to diversity, and a work environment free of frustration and anger, with subscales on diversity climate, gender acceptance and anger management.

(7) Organisational responsiveness is the extent to which the organisation meets the training needs of employees, encourages innovation, promotes optimistic attitudes and integrity, deals with difficult issues, demonstrates courage and adaptability, promotes trust, adapts to the environment, and has positive top management leadership.

(8) Positive impression is the extent to which members freely promote a positive image of the organisation (Stein, 2005).

These dimensions are listed and described in table 2.2.

Table 2.2 Dimensions of organisational emotional intelligence

Construct	Described by Stein, 2005
Job happiness	The extent to which individuals feel challenged, satisfied with their jobs, and enjoy their workplace
Compensation	The extent to which pay, bonuses, leave, and other benefits satisfy the employee
Work–life stress management	The extent to which individuals perceive the work environment to be stable, manage stress and balance their work and home lives
Organisational cohesiveness	The extent to which an individual gets along with and is able to work with others in teams in the workplace
Supervisory leadership	The extent to which the leaders are seen by their subordinates to be through their willingness to share information, involve subordinates, provide feedback, and mediating in conflicts, and are seen to be trustworthy, confident and self-aware
Diversity and anger management	The extent to which co-workers are open to diversity, accept others different from them, and manage anger and frustration
Organisational responsiveness	The extent to which an organisation meets the needs of its employees in terms of training and innovation, integrity, courageous adaptability, and visionary effective leadership on the part of top management
Positive impression	The extent to which individuals freely present a positive image of the organisation outside the organisation

Adapted from Stein's (2005) The Benchmark of Organisational Emotional Intelligence

Other scholars propose other models for organisational emotional intelligence. For instance, Merges and Bruch (2009) propose a model of organisational intelligence with dimensions of self-emotions appraisal, others'-emotions appraisal, use of emotions and regulation of emotions. Giorgi (2013) proposes a model of organisational emotional intelligence with dimensions of self-awareness, self-management, social competence and relationship management. Through content analysis, Chung-Liu and Chen (2012) analysed the concept of organisational emotional capital at personal, group and organisational level. Personal emotional capital included the constructs of optimism, happiness, well-being and hope; group emotional capital included group norms, leadership, conflict management and group identity; and organisational emotional capital included the image of the organisation held by the media, employees and the public. These could be aggregated to create an organisational emotional intelligence variable.

Having considered these different conceptualisations of organisational emotional intelligence, the researcher chose to adopt Stein's (2005) model, as it applies to individual employee perceptions on one's emotional and social working environment, and has been correlated with other measures of emotional intelligence.

2.4 Organisational emotional intelligence and workplace PsyCap

There are theoretical and empirical indicators that there could be an association between organisational emotional intelligence and psychological capital. OEI has been established to correlate with operational, innovative performance and involuntary absence (Merges and Bruch, 2009), trust (Pomraning, 2010), and employee mood and life balance (Giorgi, 2013). Similarly, psychological capital influences important organisational outcomes including satisfaction, commitment and organisational citizenship behaviour, trust, engagement and performance (Avey, et al., 2011). Though both OEI and PsyCap produce positive organisational outcomes, little is known of their relationship/association. According to a meta-analysis (Newman et al., 2014), to date no known study had examined the relationship between organisational emotional intelligence and psychological capital.

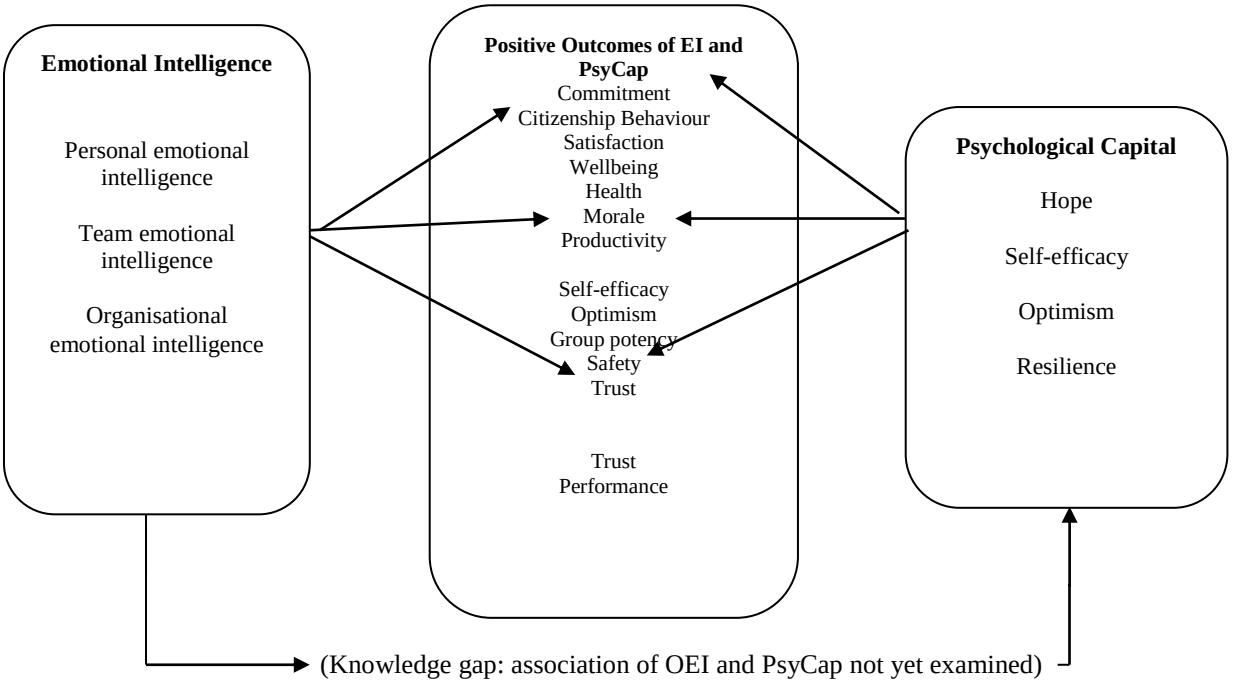

Figure 2.1 Correlates of emotional intelligence and psychological capital

Researchers exploring organisational predictors of positive psychological capital in the workplace have found that authentic leadership (Jensen and Luthans, 2006; Clapp-Smith, 2009; Walumbwa et al., 2011) and organisational prestige (Kimberley and Scott-Halsell, 2012) are important predictors of PsyCap. In addition, Luthans, Norman, Avolio and Avey (2008) observed that a positive organisational climate is necessary for employees' PsyCap. Studies such as these could indicate to an association between organisational emotional intelligence and psychological capital. This study used public sector organisations to test this thesis.

The researcher argued, therefore, that organisational emotional intelligence, which provides a macro-organisational structural context of emotional and social climate, is associated with employee-rated psychological capital. The following specific hypotheses guided the study:

H1: Employee-rated organisational emotional intelligence is positively associated with dimensions of psychological capital (PsyCap) and higher-order PsyCap (combined constructs of PsyCap). Specifically:

H_{1a}: Organisational emotional intelligence is positively associated with the hope dimension of PsyCap of public servants in Uganda.

H_{1b}: Organisational emotional intelligence is positively associated with the self-efficacy dimension of PsyCap of public servants in Uganda.

H_{1c}: Organisational emotional intelligence is positively associated with the optimism dimension of PsyCap of public servants in Uganda.

H_{1d}: Organisational emotional intelligence is positively associated with the resilience dimension of PsyCap of public servants in Uganda.

H_{1e}: Organisational emotional intelligence is positively associated with the higher-order psychological capital of public servants in Uganda.

2.5 Dimensions of organisational emotional intelligence and positive workplace PsyCap

Although there is limited literature on the relationship between dimensions of OEI and PsyCap, it has been found that some OEI dimensions affect PsyCap and/or the dimensions of PsyCap. What follows is presented to justify testing the association between OEI and PsyCap.

2.5.1 Job happiness and psychological capital

Happiness includes experiencing positive affect states and overall satisfaction in life (David, Boniwell and Ayers, 2012). Further, job happiness (JH) is considered an experience of positive

effect, a general feeling of satisfaction in the workplace, as a result of, for example, employees feeling that they are achieving goals (Weijers, Jarden, Angner, Burns, Chadwick and Thin, 2013). Happiness is a source of affective capital which brings action in every moment of work and job experience for people (Golparvar and Abedini, 2013). One of the ways to promote employee self-efficacy, a component of PsyCap, is to allow employees to experience success (mastery experience), according to Bandura (1977). The optimism dimension of PsyCap has been shown to be related to happiness in the workplace (Youssef and Luthans, 2007). But, happiness at work and in life could be an essential ingredient for employees' psychological capital (Choi and Lee, 2013). Based on these research arguments, the study postulates that:

H_{2a}: The job happiness (JH) dimension of OEI is positively associated with employee PsyCap among public servants.

2.5.2 Compensation satisfaction and psychological capital

Working for an economically successful organisation, receiving good salaries and organisational support for psychological health programmes, all part of compensation satisfaction, may build employees' confidence (a component of PsyCap) in their ability to perform their tasks (Luthans and Youssef, 2002). Some researchers have argued that instead of downsizing in an economic crisis, organisations could create resilience-enhancing reward systems and working conditions to accommodate employee interests, as a demonstration of organisational commitment to employees; these actions would enhance employee resilience (Casio, 2009), which is a construct of psychological capital. Considering the above argument, the study posited that:

$H_{2b:}$ The compensation satisfaction (CS) dimension of OEI is positively associated with employee psychological capital among public servants.

2.5.3 Organisational work–life balance and psychological capital

A study by Wang, Liu, Wang and Wang (2012) examined whether work demands interfered family-related obligations. They found that for male doctors' family demands did not interfere with work to a statistically significant degree after adjusting for age; however, for female doctors, family demands interfering with work had a negative association with PsyCap. The association between work and family (whether work interferes with family) was not statistically significant with PsyCap after adjusting for age. On the basis of these findings, the researcher argues that when professional male doctors experience family–work–life conflict, they tend to focus more energy on their work obligations, thus the increased PsyCap. In recent years, work–life practices towards employee health and well-being have triggered interest in psychological capital, with proposals that work–life balance may enhance the resilience component of PsyCap (Bardoel et al., 2014). On this basis the study posited that:

> H_{2c}: The work–life balance (WL) dimension of OEI is positively associated with employee psychological capital among public servants.

2.5.4 Supervisory leadership and psychological capital

Choi and Lee (2013) argue that it is important for organisations to realise the important role of leaders in developing psychological capital. There is evidence to suggest that certain types of leadership, such as transformational leadership (Gooty et al., 2009), and authentic leadership (Walumbwa, Luthans, Avey, and Oke, 2011, Rego, Lopes and Nascimento, 2015), influence psychological capital. This study therefore posited that:

> H_{2d}: The supervisory leadership (SL) dimension of OEI is positively associated with employee psychological capital among public servants.

2.5.5 Organisational cohesiveness and psychological capital

Caring relationships, involving dynamic interplay of self and others, may play an important role in employee resilience (Bardoel et al., 2014). The resilience dimension of PsyCap in the workplace can be enhanced through such relationships, as they provide a means of relating with others in a way that creates human development. This study therefore posited that:

H_{2e}: The organisational cohesiveness (OC) dimension of OEI is positively associated with employee psychological capital among public servants.

2.5.6 Organisational responsiveness and psychological capital

Through receiving support to develop skills and competencies through the organisation's training and career programmes, examples of the organisational responsiveness dimension of OEI, employees may develop confidence in their ability to successfully perform their tasks (Luthans and Youssef, 2004). Luthans provides evidence that PsyCap can be developed through relatively short (two hours) on-line or face-to-face intervention (Luthans et al., 2010a). Most HR practitioners and psychological capital change agents have focused on the training, which is a component of organisational responsiveness to enhance psychological capital. For example, there is evidence that PsyCap can be developed through an hour-long micro interventions conducted among management students and managers from several organisation (Luthans, Avey, Norman and Combs, 2006). This study therefore posited that:

H_{2f}: The organisational responsiveness (OR) dimension of OEI is positively associated with employee psychological capital among public servants.

2.5.7 Organisational diversity and psychological capital

Bardoel et al. (2014) argue that, depending on how it is implemented, diversity may either promote or reduce employee resilience (a component of psychological capital).In line with this, the researcher argues that if diversity management is used in conjunction with inclusive practices, employees may develop bonds with other employees, supervisors and managers (Bardoelet al., 2014), and those bonds may create an emotional and social climate that enhances psychological capital. The study therefore posits that:

H_{2g}: The diversity and anger management (DI) dimension of OEI is positively associated with employee psychological capital among public servants.

2.5.8 Organisational positive impression and psychological capital

Although there is a paucity of research into understanding the relationship between impression management and psychological capital, a study by Kimberley and Scott-Halsell (2012) established that perceived organisational prestige has a significant relationship with PsyCap in quick service restaurants. This study posited that:

H_{2h}: The organisational positive impression (PI) dimension of OEI is positively associated with employee psychological capital among public servants.

2.6 Conclusion

Despite the increasing body of research in the area of positive psychology and positive organisational behaviour (Luthans and Youssef, 2002), research has not entirely succeeded in providing predictors of PsyCap (Dawkins et al, 2013; Kalla, 2015). The focus of previous researchers has been on outcomes of psychological capital (Luthans et al., 2007; Donaldson and Ko, 2010; Avey et al., 2011; Han et al., 2012; Sridevi and Srinivasan, 2012; Dawkins et al.,

2013; Rego et al., 2010). Accordingly, inadequate research on the development of PsyCap, on determinants of PsyCap extended an opportunity for this study. The study builds on previous determinants of psychological capital, to add to knowledge about other organisational resources factors (positive organisational emotional intelligence dimensions) that could enhance workplace psychological capital.

CHAPTER 3: RESEARCH METHODOLOGY

3.1 Introduction

This section presents the philosophical background that guided the study, including the research paradigm, research design, procedure for data collection, research instruments, and data management prior to data analysis and interpretation. These have been considered the most appropriate for the research question under investigation. Limitations to the study and guidelines for an effective research study follow.

3.2 Philosophical background to the study

Scientific research should be conducted in a specified research paradigm or framework (Collins and Hussey, 2009). This determines how the research is designed, the data collected and analysed, and the results communicated (Field, 2009). Collins and Hussey (2009) distinguish between two research paradigms or philosophies – the phenomenological and positivistic research paradigms or philosophy.

3.2.1 Phenomenological research paradigm

The phenomenological research paradigm looks at human behaviour from the researcher's point of view; while phenomenological researchers focus on the meaning individual respondents give to their actual experiences related to the phenomenon under study (Collins and Hussey, 2009). As a result, phenomenological researchers search for the underlying meaning of the experience relevant to the issue. Phenomenological researchers believe social reality is subjective and socially constructed, with each person having his/her own sense of reality, resulting in multiple realities. To understand the respondents, the researcher interacts with what is being researched, and the process of observation, and ultimately the researcher's beliefs constitute what should be

the facts. Thus, the phenomenological researcher's interests direct the research, making the research value-laden with some researcher biases (Collins and Hussey, 2009).

3.2.2 Positivistic paradigm

Positivist researchers seek the facts and causes of a social phenomenon, regardless of their own views. The positivist researcher assumes that social reality is independent of the research objectives, and exists regardless of the researcher's awareness of its existence (Collins and Hussey, 2009). The researcher in a positivist paradigm is expected to be an independent observer of an already-existing reality. The view of positivists is to conduct research which is value-free with unbiased facts. Positivists believe that human behaviour studies should be conducted with techniques similar to those used by natural scientists. Positivism is rooted in realism; it searches for the truth that is out there. For example, if a bird is dancing in the forest, the positivist research would wish to explain what is in the 'forest' to make the bird dance (Ahianzu, 2011).

Positivist researchers are detached from the phenomena they are researching; they are interested in the relationship of objects that they believe existed before the study. They further believe that the study activities will not affect the objects, which will still be present after the study. Thus, to the positivist, the world exists externally and is viewed objectively, with the researcher independently taking the role of an objective analyst (Collins and Hussey, 2009).

In this study, organisational emotional intelligence and psychological capital relationships were investigated, taking the positivist view. The phenomenon under study exists in reality, independent of the researcher; it can be measured and quantified using validated instruments, and causal relationships can be inferred using statistical explanations (Collins and Hussey,

2009).Like other positivist researchers, the researcher believes strongly in the value of the quantification of constructs, as one of the best, or possibly the only way, of measuring the properties of the phenomena, arguing that what can best be known should be measurable.

It has been further argued that research may adopt a position on the continuum between the two research paradigms; this is referred to as paradigm triangulation (Creswell, 2009).

3.2.3 Triangulation of the research

Triangulation in research may refer to theory triangulation, data triangulation, investigator triangulation or methodological triangulation (Collins and Hussey, 2009). Theory triangulation means borrowing a theory from one discipline to explain a phenomenon in another discipline. Data triangulation refers to collecting data on the study phenomenon at different times or from different sources. Investigator triangulation means different researchers independently collect data on the same phenomenon, while methodological triangulation is where more than one method is used to collect and analyse data on the phenomenon.

In this study the researcher employed data triangulation, where data was collected from the same employees at different times (Creswell, 2009). Data on psychological capital plus demographic characteristics was from voluntary public servant employee participants, followed by data on organisational emotional intelligence after a period of one month from employees willing to continue with the study. The data was matched to refer to each respondent for analysis.

The main study tested the model of organisational emotional intelligence and psychological capital among employees in the public sector. The study was a cross-sectional survey, collecting data from employees from a variety of public sector organisations. The research assumed that

the constructs of organisational emotional intelligence exist in the public sector; that they are measurable for interpretation and that inferences can be made on their effect on employee psychological capital. Details of the study findings are presented in chapter four.

3.3 Research design

Research can be classified as conceptual or empirical research. Conceptual studies deal with philosophical, theoretical issues for theory building. For this reason, conceptual studies do not require new (primary) data to be gathered. On the other hand, empirical studies require the collection of both new (primary) and existing (secondary) data for analysis (Collins and Hussey, 2009).Further, research can be classified as exploratory, descriptive, analytical or predictive (Creswell, 2009).Exploratory research is undertaken when few or no prior studies are available. Descriptive research describes phenomena as they exist in reality. It categorises data depending on the characteristics of a study problem. Analytical or explanatory research describes characteristics of the phenomena or events and, in addition, analyses and explains the circumstances under which the phenomena under study may happen. Explanatory research uses inferential statistics and samples to test hypotheses in order to estimate population values. Analytical research findings can be extended to forecast and explain similar findings in other comparable contexts, thus they can also be described as predictive research (Collins and Hussey, 2009).

This study engaged a cross-sectional survey research. This involved collecting information from a large number of employees from the public sector using self-administered questionnaires. A cross-section survey was preferred for this study, because it could provide the answers to the research question of what dimensions of organisational emotional intelligence were positively associated with psychological capital in the time available for the study.

3.4 Qualitative and quantitative research

Further, depending on the methodology used by the researcher, research can be classified as quantitative or qualitative (Collins and Hussey 2009; Creswell, 2009). The complex nature of phenomena that have not been previously researched can be answered using qualitative research. The purpose of qualitative research is to explore, expand, describe and understand the meaning of such phenomena from respondents' perspectives. According to Creswell (2009), qualitative research refers to selected research methods used in exploratory research designs to gain preliminary insights into a phenomenon. Qualitative research uses interpretive techniques, which describe, decode, translate and create the meaning of the phenomena being studied in the social world. Data is interpreted, and conclusions drawn from the meanings and experiences of the respondents (Collins and Hussey, 2009). Qualitative research aims to inquire into the subjective understanding of social and human activities. Some of the interpretive techniques used in qualitative research are diaries, focus groups, interviews, observation and open-ended questionnaires. The qualitative research approach is at times considered typical of a phenomenological research paradigm and gathers data in its nominal form. On the other hand, quantitative research focuses on measuring phenomena by collecting numerical data from large numbers of respondents, analysing the data and applying statistical tests to the results (Collins and Hussey, 2009).

This study adopted a quantitative research approach to investigate what dimensions of organisational emotional intelligence are important predictors (significant and positive) of workplace psychological capital. The purpose of this quantitative research is to answer questions of the relationships between positive organisational emotional intelligence and psychological capital variables, with a view to explaining and predicting the phenomena, using quantitative

data to analyse the relationships by using statistical significance to interpret the findings (Creswell, 2009).

3.5 Deductive and inductive research

Research can also be understood from the perspective of deduction and induction in relation to the logic of the research (Collis and Hussey, 2009). Deductive and inductive terms are used to define how logic is used in explaining the research findings. The deductive approach starts with a theory and provides an explanation as to whether or not empirical evidence supports the theory. The inductive approach starts from a general view and narrows it down to create a theory.

In this study, the deductive approach was followed. The study posited an organisational emotional intelligence and psychological capital model fit. This was tested empirically, through data collection, quantitative analysis and findings interpreted through inferences through a deductive approach.

3.6 Basic and applied research

Research can also be classified as basic or applied. Applied research is application driven, where findings are intended to solve an existing problem. On the other hand, basic research is fundamental or pure research, which contributes to knowledge and theoretical understanding (Collis and Hussey, 2009) of phenomena. In this regard, this study is pure research as it is designed to contribute to the theoretical understanding of the relationship between organisational emotional intelligence and psychological capital of public servants. It is hoped to make a contribution to knowledge on workplace psychological capital determinants.

In summary, this research study can be classified as analytical, predictive research. It largely employed a positivist quantitative approach to measure the phenomena (Creswell, 2009) of organisational emotional intelligence (Stein, 2005) and psychological capital (Luthanset al., 2007). The public sector in Uganda was used as the study setting. The study tested hypothesised models empirically, and made logical conclusions from the inferences deductively (Field, 2009).

3.7 Population

A population is a set of people or collection of items in the field of inquiry (Collins and Hussey, 2009). Employees in a variety of public sector organisations including government ministries, departments and agencies in Uganda (Uganda Bureau of Statistics, 2012; Auditor General Report, 2013) were the focus for this study. The public sector employs about 295, 000 persons (Auditor General's Report to Parliament, 2013).The sample for the study was drawn from this population of public servants.

3.8 Sample size

For every study to be meaningful, it should have a representative sample (Creswell, 2009). A sample should be of an adequate size to provide reliable statistics that can be generalised to the population with a minimal level of error, and with a high level of precision and confidence (Sekaran, 2003). Precision refers to is the degree of closeness of the sample estimates to the population, while confidence is the degree of certainty that the sample estimates reflect the population status (Sekaran, 2003; Field, 2009). It would seem obvious at face value that the larger the sample, the higher the precision and confidence levels. However, this is not always the case.

Krejcie and Morgan (1970) found that as the population increases, the sample size increases at a diminishing rate, remaining constant after 387 per thousand, with no additional benefits in increasing sample size. In more recent research, Field (2009) recommends a sample size of at least 200 participants and up to 20 predictor variables to achieve a meaningful analysis. Some SEM researchers have recommended more than five participants for every item in the questionnaire (Ntomous, 2009). However, the structural equation model requires 1000 participants for an excellent sample, 500 participants as a very good sample and 200 participants as an acceptable sample size for adequate analysis (MacCallum, Brown and Sugawara, 1996; Field, 2009). In line with these recommendations, this study targeted a large sample of 1000 participants. Moreover it aimed for a response rate of 60% as obtained from previous studies in the public sector (Mafabi, Munene and Ntayi, 2012; Kasekende, 2014).

3.9 Sampling procedure

This study employs a quantitative study design, which assumes that the reality of the phenomena is out there and answers to the questions are predetermined by the questionnaire (Creswell, 2009). An individual employed by the public service sector at the time of the study was the key participant in this study. Participants were randomly sampled from public organisations in Uganda, and took part voluntarily. The procedure for selecting participants and administering questionnaires involved the following:

1. Public sector organisations were approached through their heads of institutions, seeking permission to approach members of their organisation for a study on organisational emotional intelligence and psychological capital (see appendix 1 – Introduction letter to heads of institutions).

2. Employees were randomly sampled from the lists obtained from the various HR departments and approached to seek their consent to participate in the study (see appendix 2 – Invitation letter for voluntary participation in the study).
3. Participants were informed that they were free to withdraw from the study at any time (see appendix 3 – Participant's consent form).
4. Consenting participants were requested to fill in Questionnaire One on psychological capital and demographic data (see appendix 4– Questionnaire One).
5. When the completed first questionnaires were collected, participants were asked whether they would continue (see appendix 5 – Invitation to continue with the study).
6. Participants who agreed to continue with the study were then requested to fill in the second questionnaire on organisational emotional intelligence (see appendix 6 – Questionnaire Two).

3.10 Unit of analysis

Research data is collected on a unit, which is the object on which the variable being studied is based (Collins and Hussey, 2009). In this study, the employees who provided data on organisational emotional intelligence and psychological capital were the unit of inquiry. An individual level analysis was adopted for this study. This means that data was analysed at the individual public servant level. Data from both questionnaires was aggregated to each respondent.

3.11 The research instrument

Questionnaires were adopted for this study to measure participants' rating of organisational emotional intelligence and psychological capital in public sector organisations. A questionnaire is a tool for collecting and recording information about a particular area of interest. Structured

self-completion questionnaires were used for this quantitative study. Subsequent to completing the literature review, the researcher adapted previously validated instruments from Stein (2005) for organisational emotional intelligence and from Luthans et al. (2007) for positive psychological capital.

3.11.1 Psychological capital

Psychological capital is the criterion variable (dependent variable) for this study. It was measured using the psychological capital (PCQ) instrument developed by Luthans et al. (2007). The PCQ was created to measure the positive organisational behaviour (POB) constructs of hope, self-efficacy, optimism and resilience as a high-order construct or an overall core factor (Luthans et al., 2007). The four POB constructs are expected to 'load' onto the high-order core construct in the PCQ: each is expected to load to six questions, which make up the 24-item PCQ of Luthans et al. (2007).

Though psychometrically divergent, these four constructs of hope, self-efficacy, optimism and resilience have been empirically evidenced to display convergent validity among the four constructs, creating a high order PsyCap (Luthans et al., 2007). This means that PsyCap-hope is a better assessment of an individual's hope than if the individual took a separate assessment of hope. According to Luthans et al. (2008), the four components of PsyCap share an underlying component that allows individuals who possess high levels of these capacities to perform at consistently higher levels than would be possible with high levels of just one of these components alone.

Prior research supported the psychometric scales of the constructs in the workplace, which demonstrated reliability, validity and relevancy, to develop the PsyCap questionnaire. The four

scales that best met the PsyCap criteria were hope (Synder et al., 1996);resilience (Wagnild and Young, 1993); optimism (Scheier and Carver, 1985); and self-efficacy (Parker, 1998), according to Luthans and Avolio (2007). These four constructs were selected according to the following criteria (Luthans et al., 2007):

(1) Each of the four constructs would have equal weight, so the best six items from each of the four measures would be selected.

(2) The selected items should have face and content validity, be stable and be relevant to job performance.

The following are the Cronbach alphas for each of the four constructs and the overall PsyCap measure found by Luthans and Avolio (2007).

> Hope (.72, .75, .80, .76); resilience (.71, .71, .66, .72); self-efficacy (.75, .84, .85, .75); optimism (.74, .69, .76, .79); and overall PsyCap (.88, .89, .89, .89). It should be noted that though the optimism scale in the second sample (.69) and the resilience scale in the third sample (.66) did not meet the generally accepted levels of internal consistency, the overall PsyCap measure in all four samples met the reliability consistency level of .70 and above (Luthans and Avolio, 2007, p.555).

The Cronbach alpha coefficients for each construct in this study are: self-efficacy (.756); hope (.709); resilience (.688); optimism (.647); and overall psychological capital (.877).It should be noted that though the optimism and resilience scale did not meet the generally acceptable levels for internal consistency, the overall measure for psychological capital conformed to the minimum acceptable levels (Luthans et al., 2007). The computed Cronbach alpha coefficients results for overall psychological capital was greater than 0.70 (Field, 2009). (See appendix 10 – Reliability Alpha Coefficients for study variables.)

3.11.2 Organisational emotional intelligence

Organisational emotional intelligence constructs are the predictor variables for this study. They were measured using the benchmark of organisational emotional intelligence (BOEI) questionnaire by Stein (2005). In that research, OEI was conceptualised as a general theory of what constitutes organisational emotional intelligence factors. Several factors were logically developed to include factors concerning emotional and motivational aspects of employees at work, and factors related to job performance. The validity of Stein's tool, the BOEI, was checked by administering it to a large sample of 759 respondents working in a variety of organisations, together with an established tool used for organisational assessment, namely the Campbell Organisational Survey (COS) (Campbell and Hyne, 1995, as cited by Stein, 2005). The rankings of these two scales were found to be comparable (Stein, 2005). In addition, to test the ability of the BOEI to measure social and emotional function within the organisation, the BOEI was co-administered with established tools for measuring social and emotional intelligence in two separate organisations. In one organisation, the BOEI was co-administered with a short version of the Emotional Quotient Inventory (Bar-On, 1997) and in the other it was co-administered with the Mayer-Salovey-Caruso Emotional Intelligence Test (Mayer, Salovey and Caruso, 2002). These validation exercises established high correlations of BOEI, emotional and social skills and total emotional intelligence, thus the BOEI was deemed to fulfil the purpose of measuring the emotional and social aspects of organisational culture (Stein, 2005). The reliability levels for Stein's OEI are indicated with the following Cronbach alphas for each of the constructs:

> Factor structures of Reliabilities Job Happiness (.88); Compensation Satisfaction: Pay (.85); Benefits (.83); Work Life Stress Management: Stability (.69); Stress Management (.69); Work Life Balance (.86); Organisational Cohesiveness: Co-Work Relationships

(.82); Teamwork (.86); Diversity Management: Diversity Climate (.89);Gender, Age, Racial, Tribal Acceptance (.80); Anger Management (.84); Organisational Responsiveness: Training and Innovation (.70); Optimism Integrity (.91); Courage and Adoptability (.94); Top Management Leadership (.85); Impression Management: Positive (.71); and Negative (.79).

Although the work–life stress balance, stress management and stability subscales (α = .69) are slightly below the acceptable level, the overall reliability and consistency measures of the other constructs of organisation emotional intelligence are above the conventional standard of .70 (Sekaran, 2003; Field, 2009). In addition, the OEI model was used by Pomraning (2010) who reported the following alphas for the various dimensions, all of which were acceptable at above .70:

Job happiness (α = .87); compensation satisfaction (α = .83); work life balance (α = .79); organisational cohesiveness (α = .94); supervisory leadership (α = .95); diversity and anger management (α = .90); organisational responsiveness (α = .96); positive impression (α = 69).

In the current research, the dimensions produced the following alpha coefficients: are reported as: job happiness (α = .93); compensation satisfaction (α = .70); work–life stress management (α = .67); organisational cohesiveness (α = .79); supervisory leadership (α = .88); diversity management (α = .71); organisational responsiveness (α =.84); positive impression (α = .69).Although the scales for work–life balance and positive impression are below acceptable standards for content internal reliability (.70), the other OEI dimensions and the overall OEI displayed acceptable alpha coefficients of above .70 (Field, 2009). (See appendix 10 – Reliability Alpha Coefficients for study variables.)

Some prior research has employed the aggregated model of organisational emotional intelligence and established both its psychometric soundness and its utility for management studies (Law,

Wong and Song, 2004). For instance, based on the rationale of a direct consensus model (Chan, 1998); researchers Merges and Bruch (2009) and Giorgi (2013) aggregated individual employees' emotional intelligence ratings into a single organisational-level measure of emotional intelligence to create an organisational emotional intelligence measure and test hypotheses.

However, Stein's (2005) model, which considers the direct perceptions of employees on the emotional and social climate of their organisations, was the preferred model for this study. Other studies could consider using the aggregation model developed by Merges and Bruch (2009) or Giorgi (2013).

3.12 Control variables

Control variables or confounding variables, though not part of the study, may influence the outcome of a study. Thus, researchers should always address confounding variables (Pallant, 2011). Previous researchers have established that some demographic variables influence psychological capital (Venter, 2012; Sahin et al., 2013). Therefore, this study controlled for the demographics of gender, age, years of experience, highest level of education, managerial level, functional department and public service category, in order to isolate the influence of organisational emotional intelligence on psychological capital.

3.13 Designing and pre-testing the instrument (questionnaire design)

The reliability and validity of the instrument was pre-tested using random samples of masters' students in full-time employment, who were also undertaking studies at Makerere University Business School, Uganda, East Africa. They were chosen for their work experience which should have enabled them to evaluate organisational emotional intelligence constructs and

psychological capital constructs. The data was collected during one semester session, using the draft questionnaires.

The data was then analysed to establish the statistical significance of study variables (Field, 2009). An exploratory factor analysis (EFA) was carried out (see appendix 8 for EFA summary statistics). Exploratory factor analysis is used to identify which components are considered significant in the composition of study variables (Field, 2009). In analysing the EFA results the following criteria were applied:

1. For the Kaisor-Meyer-Olkin (KMO) test, which determines sampling adequacy, the acceptable limit should be 0.70 (Field, 2009).
2. For Barlett's Test of sphericity, which determines significance of correlations, the acceptable limit for should be $p \leq .05$(Field, 2009).

It can be noted from the EFA statistics that for all the study variables, the KMO was above 0.70 and the Barlett's Test was significant (see appendix 8). This indicates an acceptable factorability (Field, 2009). Principal Factor Analysis (PFA) was used to extract the factors based on the Kaiser criteria and the Scree plots and the literature on the study variables. Using the Kaiser criteria (KI rule), factors with eigen values under 1.0 was dropped. Though this method is criticised in that it may at times over- or underestimate the number of factors, it was used in this study to determine which factors explained a study variable.

Cattell Scree test plots were also used in determining the factors. The Cattell plots the component as the X axis and the corresponding eigen values as the Y axis. As one proceeds to the right, the eigen values drop, making an 'elbow' towards the less steep decline. It is

recommended that when using Scree tests, all the components after the one at the elbow should be dropped, using the inflexion curve as the cut-off point (Field, 2009). However, this method is criticised for being subjective, since the researcher can be biased and choose the cut-off point subjectively when identifying exactly where the elbow starts. For this reason, it is argued that the Scree plots provide fairly reliable criteria for the factor selection only if the sample is more than 200 respondents.

Given the criticisms of each of these tests (the KI rule and the Scree plot), both were used by the researcher to determine the factors extracted by the EFA for each variable in the study. A minimum of factor loadings was set at 0.4 level of significance to extract the most significant items to load on the extracted factors (Field, 2009, Hair, Black, Babin, and Anderson, 2010). All the items that loaded on each component were named, and the items that did not load on the component were dropped. Where there were cross-loadings, the higher loading was taken based on the theoretical contribution. For all the variables, the cumulative percentage of variance explained by the components based on rotation of sums of squared loadings should be above 50 percent (Hair et al., 2010). The summary statistics for this exploratory factor analysis are reported in appendix 8.

Further the component matrix for each of the study variables was analysed. The component matrix for the dependent variable (psychological capital) is reported in table 3.1:

Table 3.1 Psychological capital rotated component matrix

Rotated Component Matrix				
	Component			
	1	2	3	4
I feel confident in contributing to the discussions about organisational strategy	.785			
I feel confident in representing my work area in meetings with management	.771			
I feel confident about helping to set goal in my work area	.708			
I am confident analyzing a long-term problem to find a solution	.619			
I usually take stressful things at work step by step		.721		
I can get through difficult times at work, of difficulties I have experienced before		.664		
At times I met the goals I have set for myself		.623		
I think of many ways to reach my current work goals		.556		
I feel I can handle many things at the same time at my workplace			.772	
When things are uncertain for me at work, I usually expect the best			.726	
I feel confident presenting information to a group of colleagues			.644	
I am prepared to accept anything that can happen to me at work				.772
I always look on the right side of things regarding my work				.689
I approach my work with the attitude that something positive will always turn out, not matter how challenging situations present themselves				.420
Total eigen values	2.358	2.072	1.861	1.450
% of variance explained	18.428	14.798	13.294	10.357
Cumulative percent	18.428	33.226	46.519	56.875

Extraction: Principal component analysis

From table 3.1 and the EFA statistics reported in appendix 8 we can see that the KMO index is 0.822, and the determinant is significant; 56.9% of the variance was explained by the four dimensions self-efficacy (18.4%), resilience (14.8%), optimism (13.9%) and hope (10.4%) in ascending order. This is sufficient to warrant proceeding with further statistical tests.

The component matrix for the independent variable job happiness is reported in table 3.2.

Table 3.2 Job happiness rotated component matrix

	Component
	1
I would enthusiastically recommend this organization to others	.786
My job gives a sense of fulfillment	.754
I would highly recommend our product or service to others	.713
Total Eigen values	1.567
% variance explained	52.236
Cumulative percentage	52.236

Extraction Method: Principal Component Analysis.

It can be seen from the table in appendix 8 that the KMO index is 0.717, the Barlett's Test is significant, and the determinant is 0.605; in table 3.2 it can be seen that one factor accounted for 52.2% of the variance for the dimension of job happiness.

The factor analyses for the other independent variables are presented in appendix 9 –Exploratory Factor Analysis Rotated Component Results. For the variable compensation satisfaction two factors were extracted. The KMO index is 0.742, the Barlett's Test is significant, the determinant is 0.317 (see appendix 8) for the two factors of pay satisfaction (34.5%) and benefits satisfaction (20.2%), which accounted for 54.6% of the variance found for this dimension.

One factor was extracted for the dimension of supervisory leadership, and accounted for 58.6% of the variance (see appendix 9). The KMO index is 0.872, the Barlett's Test is significant, the determinant is 0.092 (see appendix 8).

Two factors were extracted for organisational cohesiveness, team work (37.1%) and co-work relations (18.3%), accounting for 55.5% of the variance found (see appendix 9).The KMO index is 0.836, the Barlett's Test is significant, the determinant is 0.096 (see appendix 8)

Four factors were extracted for organisational responsiveness, optimistic integrity (23.3%), courageous adaptability (12.8%), top management leadership (10.7%), and training and innovation (9.2%), accounting for 56.0% of the variance found(see appendix 9).The KMO index is 0.910, the Barlett's Test is significant, the determinant is 0.001 (see appendix 8).

Two factors were extracted for work–life management, work–life balance (37.1%) and stability (18.3%), accounting for 55.5% of the variance found(see appendix 9).The KMO index is 0.726, the Barlett's Test is significant, the determinant is 0.525 (see appendix 8).

Three factors were extracted for diversity management. (see appendix 8), anger management (24.5%), diversity climate (16.6%), and gender/age acceptance (15.8%), accounting for 56.8% of the variance found(see appendix 9).The KMO index is 0.818, the Barlett's Test is significant, the determinant is 0.073 (see appendix 8).

Two factors was extracted for positive impression, internal impression (37.2%) and external impression (24.6%), accounting for 61.8% of the variance found (see appendix 9).The KMO index is 0.710, the Barlett's Test is significant, the determinant is 0.539 (see appendix 8).

3.14 Reliability

Reliability refers to the ability of the study to be replicated by another researcher, with the same results. It is argued that reliability contributes to the validity of a study, although it is not the only contributor to validity (Collins and Hussey, 2009).

In quantitative research methods, a measurement instrument should have stability by securing consistent results over time, with repeated use by the same or different investigators. The measure is also required to display homogeneity (internal consistency among the items for measuring the construct), otherwise referred to as reliability. Reliability of the research

instrument for quantitative data collection can be estimated by using the 'test re-test', parallel form method or the split-half method (Devlon, 2006). In the 'test re-test' and parallel form methods of estimating the reliability of the instrument (Kothari, 2004), a questionnaire is filled in by the same respondents twice, on separate occasions, to measure the stability and equivalence of the measures. The correlation coefficient for the two sets of data is computed, providing an index of reliability based on correlation coefficients of zero, negative or positive. In the split-half method of estimating reliability (Field, 2009), the questionnaire is divided into two equal halves and the correlation coefficient of the two sets of data is computed; the reliability is interpreted depending on the internal consistency of the measures using Cronbach's alpha reliability coefficient (Devlon, 2006). Cronbach's alpha reliability coefficient reflects the average inter-correlations among the items (variables) measuring the concept. The closer Cronbach's alpha is to 1, the higher the internal consistency reliability. The aim of this method is to establish which items of the research instrument are homogenous and reflect the same underlying constructs. Every item in the questionnaire is correlated with other items across the entire sample; the average inter-item correlation is used as the index of reliability. Alpha equals zero when the true score is not measured at all, reflecting an error component. Alpha equals 1.0 when all items measure only the true score and there is no error component (Kothari, 2004; Field, 2009).The percentage of variance is used to interpret Cronbach's alpha reliability coefficient. The percentage of variance in the observed scale can explain the hypothetical true scale composed of all possible items in the population. It should be noted that Cronbach's alpha coefficients are computed as average inter-correlations among the items measuring the concept, and indicate the level of interpretation of perceptions of the variables being investigated. Alpha scores of above 0.80 are considered good for any scale, 0.70 or higher are moderately good, and

0.60 are acceptable, especially in exploratory research, but alphas above 0.95 are at times questionable (Collins and Hussey, 2009).

In this study, due to resource constraint, the researcher used Cronbach's alpha reliability, which is the most widely used measure of reliability in social and organisational science in testing the internal consistency (Collins and Hussey, 2009; Field, 2009; Bonett and Wright, 2015).

In line with Luthans et al. (2007), in this study the Cronbach alpha for each of the 6-item measures adopted and the overall PsyCap measure were: hope (α = .71), resilience (.69), self-efficacy (.76), optimism (.65) and overall PsyCap (.88). It should be noted that though the resilience and optimism scale did not meet the generally acceptable levels of internal consistency, the overall PsyCap measure met the reliability consistency level of≥ .70 and is moderately good (Nunnally and Bernstein, 1994); and ≥ 0.60 is acceptable (Collins and Hussey, 2009).

Further, in this study the Cronbach alpha for each of the adopted measures of OEI and the overall OEI measure were job happiness (α = .68), compensation satisfaction (.70), work–life balance (.67), organisational cohesiveness (α =.79), supervisory leadership (α = .88), diversity and anger management (α = .713), organisational responsiveness (α = .84), positive impression (α =.69), and overall organisational emotional intelligence (α = .925). It should also be noted that though the job happiness, work–life balance and positive impression scale did not meet the generally acceptable levels of internal consistency of ≥ .070, they are greater than Collins and Hussey's (2009) acceptable 0.60 and the overall OEI measure met the reliability consistency level of .70 and above (Collins and Hussey, 2009; Field, 2009; Bonnett and Wright, 2015).

In conclusion, all the scales conformed to the minimum alpha coefficient of reliability consistency level of .70 (when rounded to the nearest one decimal) and above (Collins and Hussey, 2009; Field, 2009; Bonnett and Wright, 2015). (See appendix 10 – Reliability alpha coefficients for study variables.)

3.15 Validity

According to Collins and Hussey (2009), validity is used to explain the degree to which research findings precisely reflect the phenomena being investigated. In quantitative research, internal validity refers to the ability of the research instrument to measure what it is intended to measure (Sekaran, 2003; Creswell, 2009). Collins and Hussey (2009) distinguish several types of internal validity, to include face validity, criterion validity, construct validity and external validity, described as follows.

Face validity is the extent to which items that are intended to measure a concept appear to the 'naked eye' as if they will indeed measure the concept (Collins and Hussey, 2009). In this study the questionnaires were subjected to both academic and professional experts for scrutiny.

Criterion validity reflects the degree to which the predictor (independent variable) is adequate in explaining the relevant aspects of the criterion (Cooper and Schindler, 2006). In this study, overall OEI explained psychological capital ($\beta = .616$; $CR > 1.96$, $p = .000$).

Construct validity refers to the extent to which the research instrument is able to provide evidence based on theory (Collins and Hussey, 2009; Kothari, 2004). It refers to the goodness of the measure (Sekaran, 2003). Construct validity measures phenomena which are not directly observable. This study measured the organisational emotional intelligence and the psychological capital of public servants. These constructs are not observable with the 'naked eye', but

validated items have been designed to measure them. Construct validity testifies how well the results obtained from the use of the measure fit the theories around which the test is designed (Sekaran, 2003). There are two types of construct validity: convergent and discriminant validity (Sekaran, 2003).

Convergent validity verifies the extent to which indicators of the latent variables correlate with each other. Convergent validity is established if the scores obtained using two different instruments measuring the same variable are correlated highly (alpha coefficients ≥ 0.70) for all indicators (Sekaran, 2003). Convergent validity indicates item homogeneity within the same construct. It is the conformity of multiple items in measuring the same construct (Kim, 2009).

In this study, convergent validity was interpreted using Bentler-Bonnet' Normed Fit Index (NFI) and the incremental fit index (IFI).The NFI and IFI use baseline comparisons, to measure proportionate reduction in the chi-square values, when moving from the baseline to the hypothesised model.NFI and IFI values for study constructs were above .90, signifying convergent validity (Field, 2009; Hair et al., 2010; Van der Eijk and Rose, 2015). (See appendix 15–Convergent Validity.)

Discriminant validity verifies the extent of the correlation between two variables (factors). It is confirmed when their correlation coefficients are close to zero (0), suggesting they are unrelated (Sekaran, 2003). That is, discriminant validity indicates heterogeneity between different constructs, that is, the extent to which they are not related. Poor discriminant validity confirms multicollinearity, a situation where more than two independent variables are highly correlated and difficult to interpret. In this study, discriminant validity was assessed calculating average variance explained (AVE), using the formula provided by Fornell and Larcker (1981) for

constructs. AVE for organisational emotional intelligence is .56 and psychological capital is .50. In both variables the AVE is ≥ .50, implying discriminant validity. (See appendix 15– Discriminant validity for study variables.)

External validity verifies the extent to which the research results can be applied to cases or situations beyond those in the particular study (Collis and Hussey, 2009). The degree to which the conclusions of any research can be generalised to the population depends on the sample. In this study, analysis was based on 668 public servants; the findings are generalised to other public servants in Uganda. Respondents were attracted from several public sector organisations.

Statistical validity bases research findings on statistical evidence. However, violation of statistical assumptions may lead to errors in the testing of hypotheses, known as Type I and Type II errors (Cooper and Schindler, 2006). Type I error (α) occurs when a researcher rejects a true null hypothesis and concludes that there is a relationship between variables, when actually there is none. A Type II error (β) occurs when a researcher fails to reject a false null hypothesis and concludes that there is no relationship between variables, when a relationship actually does exist (Collis and Hussey, 2009).Parametric tests, including T-Tests, correlations, regressions and analysis of variance, are based on assumptions of normal distribution of data (Ghasemi and Zahediasl, 2012). Therefore, statistical assumptions of multivariate analysis should hold in order to draw accurate and reliable conclusions. In this study, statistical assumptions were assessed through checking for normality of data, linearity and multi-collinearity analysis, through data management.

3.16 Data management

Preliminary data analysis was undertaken in order to confirm if the data collected for the study was appropriate for parametric analysis and multivariate analysis (Field, 2009; Hair et al., 2010). This included checking for missing values, outliers, normality, linearity, multicollinearity and homoscedasticity, as the following describes.

3.16.1 Missing values

Missing values are statements where no response has been supplied by the respondent; if these are not managed they will affect the multivariate analysis (Field, 2009). The researcher checked for missing gaps during data collection, and where possible requested the participants to complete them. Other missing values were identified by examining the patterns of missing values and determining the missingness, using the Missing Completely at Random (MCAR) according to Little's MCAR test. According to Little (1988), the missing data is missing completely at random (MCAR) if Little's Chi square test of the dataset is not significant; that is, data missing completely at random are cases where the missing data does not depend on the variable of the study interest. Little's MCAR test was Chi-Square = 1427.484, DF = 1474, Sig. = .803), which implies that data was missing randomly and does not depend on any other variable of interest in the dataset. In addition, the researcher established that the missing values were less than 5% of the data (see appendix 11 – Missing Variables Analysis). This indicated that the missingness may not affect the analysis significantly. Further, the researcher handled the cases of outliers.

3.16.2 Outliers

Field (2009) describes outliers as the values that are exceptionally out of range in relation to the measurement scale. The outliers were identified and managed by deleting them, transforming them or correcting them, depending on their nature (Field, 2009). Outliers can be categorised as univariate outliers, bivariate outliers or multivariate outliers (Field, 2009). Univariate outliers were managed using the minimum and maximum frequency counts and means. Outliers due to data entry were corrected by referring to the questionnaire and inserting the correct values. Bivariate outliers were analysed using bivariance scatter plots, and examining the distribution within the plots. If the marks on the scatter plots are far apart in distribution, this would indicate bivariate outliers. The marks on the scatter plots in this study were not far apart from each other, thus there were fewer outliers. (See appendix 13 – Scatter plots.) In addition, the researcher ran Z-scores to check for outliers; any values with -/+3 were corrected to the nearest highest or lowest value (Field, 2009; Aguinis, Gottfredson and Joo, 2013).

After an MCAR and outlier analysis had been carried out (Field, 2009), the researcher decided to replace the missing values, using linear interpolation. Although there are other means of replacing missing values, such as series means, means of nearby points, median of nearby points, and linear trend at point, the researcher preferred linear interpolation to replace missing values. This method uses the value before the missing value and the first valid value after the missing value for interpolation. Linear interpolation offers the best results for all percentages of missing values in comparison to other methods. It has been used by previous researchers in the public sector in Uganda (Kasekende, 2014).

3.16.3 Normality

Normal data distribution is one of the key assumptions or requirements for parametric hypotheses testing. Accurate and reliable conclusions can be drawn about reality, when there are assumptions of parametric analysis including normality hold (Ghasemi and Zahedial, 2012). Though true normality is considered a myth (Elliottand Woodward, 2007), it is important to ascertain whether the distribution of data assumes close normality of data. In this study, normality of data was examined through investigation of the level of skewness and kurtosis, and visual inspection of the distribution using P-P plots (probability-probability plots) (Field, 2009; Ghasemi and Zahediasl, 2012). Skewness and kurtosis statistics should not be more than 2.5 times the standard errors (Field, 2009) (see appendix 12a – Skewness and Kurtosis). Skewness statistics do not exceed the value of 3 and kurtosis statistics do not exceed the value of 10 (Weston and Gore, 2006, Ryu, 2011), implying that the level of distribution is considered acceptable for this study.

Further, statistical analysis in SPSS can check for normality using visual inspection of distribution including P-P plots, Q-Q plots (quantile-quantile plots), frequency distribution histogram, stem and leaf plots. In this study, the P-P plots showed closeness to the line of good fit. (See appendix 12e – P-P plots). The shape of the histogram of the multivariate normality test was bell-shaped, providing evidence of a fairly normal distribution of data. (See appendix 12d – histogram-normal distribution of data.)

Further, graphical assessment of normality was supplemented with a much-used assessment of normality, the Kolmogorov-Smirnov/Shipiro-Wilk test (K-S). The test was significant for psychological capital and insignificant for organisational emotional intelligence, thus suggesting non-normal distribution for psychological capital, but normal distribution for the organisational

emotional intelligence variable (Field, 2009). However, for a large sample as in this study, significant results may be derived even in the case of small deviations from normality (Field, 2009). The small deviation will not be deemed to affect the results of the parametric test. The K-S test is highly sensitive to extreme values, has low power and it not be serious for testing normality, thus rendering the test less conservative (Steinskog, 2007). Thus, the researcher depended on visual observations (histogram, p-p and q-q plots) to presume that the data was fairly distributed. (See appendix12b – K-S Tests.)

3.16.4 Homoscedasticity

Homescedasticity, also described as homogeneity of variance, refers to the measure of equal variance within data (Field, 2009). This means that the variance about the phenomena in the population should be equal in regard to the different characteristics of the respondents. The level of homogeneity of variance in data was tested by the Levene Test (Field, 2009). An insignificant Levene Test suggested that the data is homogeneous; if the Levene Test is significant at $p<.05$, it means the variance is significantly different.

3.16.5 Linearity

In order to carry out parametric analysis, there is a need for researchers to establish whether the data is linear. This was examined using regression p-p plots, in which the marks were distributed along a straight line in the graphs (Field, 2009), suggesting linearity between the dependent and predictor variables. Further observation indicates that the F statistics generated through the regression was ($F= 35.71$, $df = 8$, sig F change = .000) significant (See appendix 13c), thus indicating a linear model.

3.16.6 Multicollinearity

Multicollinearity is a condition where correlations between the predictor variables are very high, > than 0.9. This may distort the regression coefficients and the R square. In this study, multicollinearity was confirmed through the Variance Inflation Factor (VIF), which was less than 4, with tolerance values of more than .02. (See appendix 14a – VIF). In addition, the condition index observed (see appendix 14b – Condition Index) was below 30, indicating a limited threat of multicollinearity. Furthermore, the Durbin-Watson index was used to test for auto-correlations of the residual (see appendix 14c – Durban Watson Auto Collinearity).The index gave a score of 1.8 (below 2), suggesting a limited threat of auto-correlations of residuals (autocorrelations) in this study.

3.17 Confirmatory factor analysis

In order to understand the study variables' measurement models, a confirmatory factor analysis was carried out. The data was subjected to a confirmatory factor analysis (CFA) using Analysis of Moment Structure (AMOS) software version 20. The default maximum likelihood (ML) estimation, which has been shown to provide the most realistic indices of fit (Iacobucci, 2009), was used. There are a large number of measures to evaluate the empirical quality of the CFA in terms of statistical tests and goodness-of-fit measures (Field, 2009; Hair et al., 2010; Van der Eijk and Rose, 2015). These include an insignificant goodness-of-fit index (at 0.05), which signifies model fit (Hu and Bentler, 1999). Other approximate fit indexes that have proved popular include Goodness-of-Fit (GFI), Adjusted Goodness of Fit Index (AGFI), Normed Fit Index (NFI), Relative Fit Index (RFI), Incremental Fit Index, Tucker Lewis Fit Index (TLI) and Comparative Fit Index, which should be above 0.9 to indicate a model fit (Hu and Bentler, 1999; Field, 2009; Hairet al., 2010). In other approximate fit indices, the root mean square error of

approximation (RMSEA) of values less than 0.08, and the root mean squared residual (RMR) of values less than 0.05, would indicate a reasonable model fit (Field, 2009; Hair et al., 2010). Significance of standardised regression weight (standardised loading factor) signifies that the indicator (items) variables (observed) are significant and representative of their latent (unobserved) variable. Significance of estimates of correlations indicates a two-way correlation between specified variables. In addition, modification indices (MI) suggest correlations between variables and respective deductions in chi-square values, should these correlations be used for model adaptations likely to result in an adequately fitting model (Hair et al., 2010; Van der Eijk and Rose, 2015).

A confirmatory factor analysis was run for observed variables to determine if, when using the public servants' sample for the full model, the set of latent variables for each model confirmed a factor-loading pattern for prescribed latent variables in each model.

3.17.1 Job happiness measurement model

A CFA was run using six items (adapted from Stein, 2005) as observed variables and one latent (unobserved) variable called job happiness, a dimension of OEI. The statistical analysis is summarised in table 3.3.

Table 3.3 Summary statistics for job happiness

Variable	X^2	DF	X^2/DF	P	NFI	GFI	AGFI	TLI	CFI	RMSEA
JobHap	1.96	2	.983	.374	.994	.998	.992	1.000	1.000	.000

			Estimate	S.E.	C.R.	P	β
JH1_1	<---	JH	1.000				.502
JH2_1	<---	JH	.933	.120	7.746	***	.478
JH4_1	<---	JH	1.025	.120	8.536	***	.599
JH6_1	<---	JH	1.331	.155	8.598	***	.658

Primary Source

The CFA for job happiness (JH) reported in table 3.4 generated a chi-square of 1.96 at p-value .374 (not significant at .05); thus suggesting a good model fit. Other supporting fit indices reported include C/MIN/DF =.998, GFI =.998, AGFI =992, NFI = 994, CFI = 1.00, TLI = 1.000, and RMSEA = .000, all confirming a good model fit. The critical ratios were greater than 1.96 and p-values were less than .001, indicating the existence of significant relationships between observed variables (items) and the unobserved variable (job happiness). In addition, observed multiple regression (standardised coefficients) are ≥ 0.5, indicating acceptable item reliability (Field, 2009). Normed Fit Index (NFI) is .994 (> .90); and the squared multiple correlations are above .20, signifying convergent validity and reliability (source). In conclusion, based on AGFI (>.90) and RMSEA (≤.05); the observed structure of job happiness among public servants in Uganda had a good model fit. The measurement model is represented in figure 3.1.

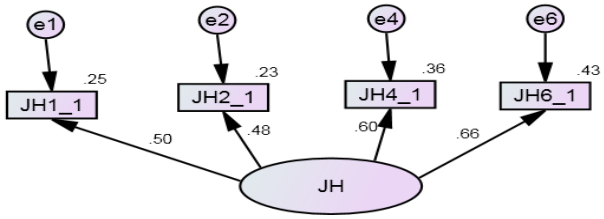

Chi-Square (CMIN) = 1.966
Degree of Freedom (DF) =2
Probability (p) = .374
Ratio of Chi-Square to Degree of Freedom (CMIN/DF) = .983
Goodness of Fit (GFI) = .998
Adjusted Goodness of Fit (AGFI) = .992
Tucker Lewis Index (TLI) = 1.000
Normed Fit Index (NFI) = .994
Comparative Fit Index (CFI) = 1.000
Root Mean Square Error of Approximation (RMSEA) = .000

JH1_1 = There is opportunity for career advancement for me within this organization
JH2_1 = My supervisor shares information with me
JH4_1 = My job gives a sense of fulfillment
JH6_1 = I would enthusiastically recommend this organization to others

Figure 3.1 CFA job happiness measurement model

3.17.2 Compensation satisfaction measurement model

A confirmatory factor analysis (CFA) was run using twelve items (adapted from Stein, 2005) as observed variables and two latent (unobserved) variables, pay and benefits for compensation satisfaction, dimensions of OEI. Results are reported in table 3.4.

Table 3.4 Summary statistics for compensation satisfaction

Variable	X^2	DF	X^2/DF	P	NFI	GFI	AGFI	TLI	CFI	RMSEA
ComSat	19.97	8	2.49	.010	.997	.990	.974	.968	.983	.047

			Estimate	S.E.	C.R.	P	B
PA6_1	<---	PA	1.000				.503
PA4_1	<---	PA	1.195	.132	9.037	***	.556
PA5_1	<---	PA	1.567	.162	9.682	***	.729
BE2_1	<---	BE	1.000				.532
BE3_1	<---	BE	1.262	.123	10.287	***	.703
BE1_1	<---	BE	1.220	.123	9.950	***	.620

Primary Source

The CFA for compensation satisfaction (CS) presented in table3.4 generated a chi-square of 19.97 at p-value .010 (significant at 0.05), thus suggesting a poor model fit. However, other indices reported include C/MIN/DF =.2.49, GFI =.990, AGFI =974, NFI = 997, CFI = .983, TLI = .968, and RMSEA = .047, all supporting an acceptable good model fit. The critical ratios were greater than 1.96 and p-values less than .001; both indicate the existence of significant relationships between observed variables (items) and the unobserved variable (compensation satisfaction). In addition, observed multiple regression (standardised coefficients) are above 0.5, indicating item reliability (Field, 2009).Normed Fit Index (NFI) is .997, which is > .90, and squared multiple correlations are above .20, signifying convergent validity and reliability (source). In conclusion, based on GFI (>.90) and RMSEA (≤.05) (Field, 2009; Hair et al., 2010; Van der Eijk and Rose, 2015), the observed structure of compensation satisfaction among public servants in Uganda had a good model fit. The measurement model of compensation satisfaction is represented in figure 3.2.

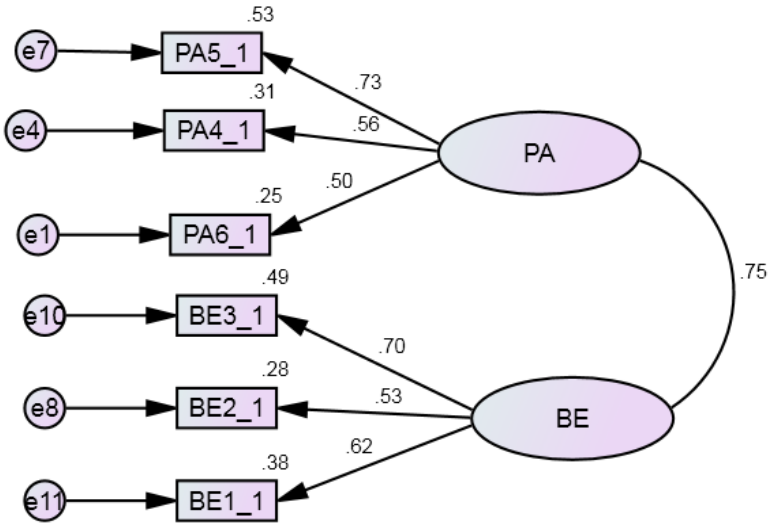

Chi-Square (CMIN) = 19.97
Degree of Freedom (DF) = 8
Probability (p) = .010
Ratio of Chi-Square to Degree of Freedom (CMIN/DF) = 2.49
Goodness of Fit (GFI) = .990
Adjusted Goodness of Fit (AGFI) = .974
Tucker Lewis Index (TLI) = .968
Normed Fit Index (NFI) = .972
Comparative Fit Index (CFI) = .983
Root Mean Square Error of Approximation (RMSEA) = .047

PA1_1 = My pay is consistent with the industry standard for my occupation
PA4_1 = When were requested to work extended hours outside of my regular work hours, I feel adequately compensated.
PA5_1 = The pay package here provides incentives to those who work hard
BE1_1 = The quality of this organisation's benefit package is one of the reasons I stay
BE2_1 = My organization shares its financial success fairly with employees
BE3_1 = This organisation's benefits is adequate for the work I perform

Figure 3.2 CFA compensation satisfaction measurement model

3.17.3 Work–life balance measurement model

A confirmatory factor analysis (CFA) was run using eight items (adapted from Stein, 2005) as observed variables and two latent (unobserved) variables called stress management and work–life balance for the work–life balance management dimension of OEI. Results are reported in table 3.5.

Table 3.5 Summary statistics for work–life balance measurement model

Variable	X^2	DF	X^2/DF	P	NFI	GFI	AGFI	TLI	CFI	RMSEA
WokBal	20.91	8	2.61	.007	.958	.990	.950	988	.958	.049

			Estimate	S.E.	C.R.	P	β
SM1_1	<---	SM	1.000				.458
SM2_1	<---	SM	1.211	.174	6.952	***	.490
SM4_1	<---	SM	.912	.148	6.179	***	.390
BA1_1	<---	BA	1.000				.671
BA2_1	<---	BA	.854	.084	10.187	***	.582
BA3_1	<---	BA	.867	.085	10.242	***	.589

Primary Source

The CFA for work–life balance presented in table 3.5 generated a chi-square of 20.91 at p-value .007 (significant at .05), thus representing a poor model fit. However, other fit indices reported include C/MIN/DF =2.61, GFI =.990, AGFI = .950, NFI = .958, CFI = .958, TLI = .988, and RMSEA = .049; all confirm an acceptable good model fit. The critical ratios were greater than 1.96 and p-values less than .001,indicating the existence of significant relationships between observed variables (items) and the unobserved variable (work–life balance).In addition, observed multiple regression (standardised coefficients) were above 0.4 (except SM4), considered to indicate acceptable item reliability. Normed Fit Index (NFI) is .958 (> .90), and squared multiple correlations (above .20) signify convergent validity and reliability. In conclusion, based on GFI (>.90) and RMSEA (≤.05) (Field, 2009; Hair et al., 2010; Van der Eijk and Rose, 2015), the observed structure of work–life balance among public servants in Uganda had an acceptable good model fit. The measurement model of work–life balance is represented in figure 3.3.

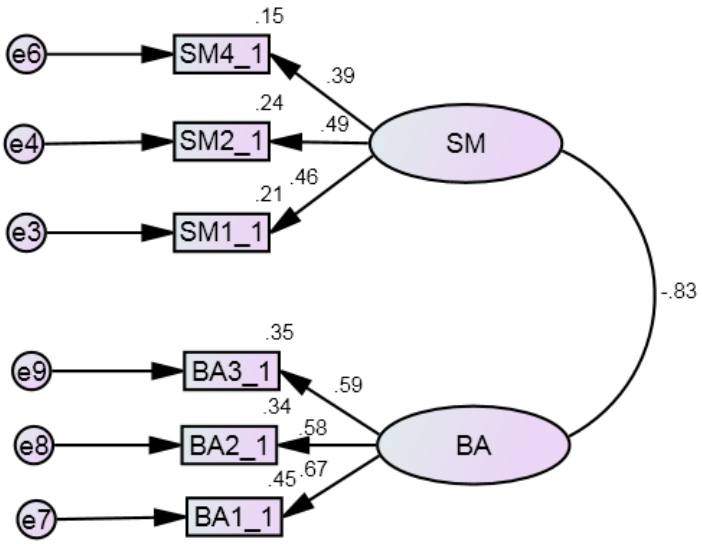

Chi-Square (CMIN) = 20.912
Degree of Freedom (DF) = 8
Probability (p) = .007
Ratio of Chi-Square to Degree of Freedom (CMIN/DF) = 2.6147
Goodness of Fit (GFI) = .990
Adjusted Goodness of Fit (AGFI) = .973
Tucker Lewis Index (TLI) = .950
Normed Fit Index (NFI) = .958
Comparative Fit Index (CFI) = .973
Root Mean Square Error of Approximation (RMSEA) = .049

SM1_1 = My job creates stress that makes it difficult to get the job done*
SM2_1 = Unrealistic deadlines make it difficult to get the job done*
SM4-1 = Changes during the past 6 months have made it a lot more difficult to get the job done*
BA1_1 = Due to job demands, I find it difficult to balance work with other life issues*
BA2_1 = Due to job demands, I rarely have enough time for my friends or family*
BA3 _1 = Unpredictable work hours cause significant problems in my personal or family life*

Figure 3.3 CFA work–life balance measurement model

3.17.4 Organisational cohesiveness measurement model

A confirmatory factor analysis (CFA) was run, using nineteen items (adapted from Stein, 2005) as observed variables and two latent (unobserved) variables called co-work relationship and teamwork for organisational cohesiveness dimension of OEI. Results are presented in table 3.6.

Table 3.6 Organisational cohesiveness measurement model

Variable	X^2	DF	X^2/DF	P	NFI	GFI	AGFI	TLI	CFI	RMSEA
OC	8.46	4	2.12	.076	.991	.995	.981	988	.991	.041

			Estimate	S.E.	C.R.	P	B
WR3_1	<---	WR	1.000				.724
WR5_1	<---	WR	1.015	.076	13.449	***	.677
TW1_1	<---	TW	1.000				.713
TW3_1	<---	TW	.983	.070	13.994	***	.656
TW7_1	<---	TW	.952	.065	14.750	***	.707

Primary Source

The CFA for organisational cohesiveness (OC) reported in table 3.6 generated a chi-square of 8.46 at p-value .076 (not significant at .05), thus suggesting a good model fit. Other fit indices reported include C/MIN/DF =2.12, GFI =.995, AGFI =981, NFI = 991, CFI = 991, TLI = 988, and RMSEA = .041; all confirming an acceptable good model fit. The critical ratios are greater than 1.96 and p-values less than .001, indicating existence of significant relationships between observed variables (items) and the unobserved variable (organisational cohesiveness).In addition, observed multiple regression (standardised coefficients) indicate item reliability (values are 0.5, considered an acceptable level of each item). Normed Fit Index (NFI) is .991 (> .90) and squared multiple correlations (above .20) signify convergent validity and reliability. In conclusion, based on GFI (>.90) and RMSEA (≤.05) (Field, 2009; Hair et al., 2010; Van der Eijk and Rose, 2015), the observed structure of organisational cohesiveness among public servants in Uganda had a good model fit. The measurement model for organisational cohesiveness is represented in figure 3.4.

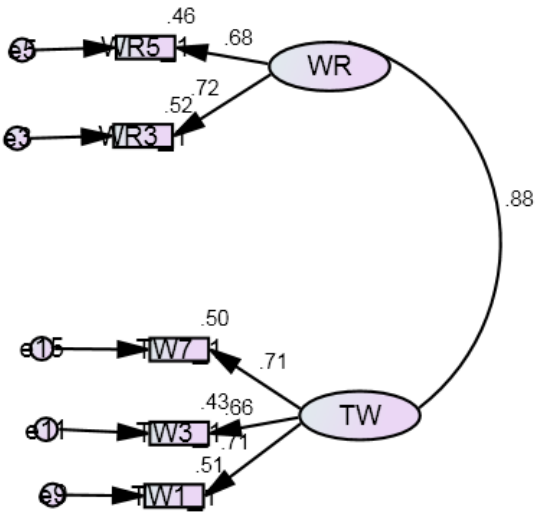

Figure 3.4 CFA organisational cohesiveness measurement model

3.17.5 Supervisory leadership measurement model

A confirmatory factor analysis (CFA) was run using fifteen items (adapted from Stein, 2005) as observed variables and one latent (unobserved) variable called supervisory leadership dimension of OEI. Results are presented in table 3.7.

Table 3.7 Summary statistics for supervisory leadership measurement model

Variable	X^2	DF	X^2/DF	P	NFI	GFI	AGFI	TLI	CFI	RMSEA
SL	11.30	9	1.15	.255	.990	.994	.987	997	.998	.020

			Estimate	S.E.	C.R.	P	B
SL3_1	<---	SL	1.000				.684
SL6_1	<---	SL	.750	.062	12.068	***	.535
SL7_1	<---	SL	.890	.063	14.025	***	.633
SL8_1	<---	SL	.959	.060	16.012	***	.747
SL10_1	<---	SL	.926	.066	13.962	***	.630
SL15_1	<---	SL	.969	.062	15.670	***	.725

Primary Source

The CFA for supervisory leadership (SL) reported in table 3.7 generated a chi-square of 11.30 at p-value .255 (non-significant at .05), thus suggesting a good model fit. Other fit indices reported include C/MIN/DF =1.15, GFI =.994, AGFI =987, NFI = 990, CFI = 998, TLI = 997, and RMSEA = .020, all confirming an acceptable good model fit. The critical ratios greater than 1.96 and p-values less than .001 indicate the existence of significant relationships between observed variables (items) and the unobserved variable (supervisory leadership). In addition, observed multiple regression (standardised coefficients) are greater than 0.4, considered an acceptable level of each item reliability). Normed Fit Index (NFI) is greater than .90 and squared multiple correlations is greater than .20, signifying convergent validity and reliability. In conclusion, based on GFI (>.90) and RMSEA (≤.05) (Field, 2009; Hair et al., 2010; Van der Eijk and Rose, 2015), the observed structure of work–life balance among public servants in Uganda has an acceptable model fit. The measurement model for supervisory leadership is represented in figure 3.5.

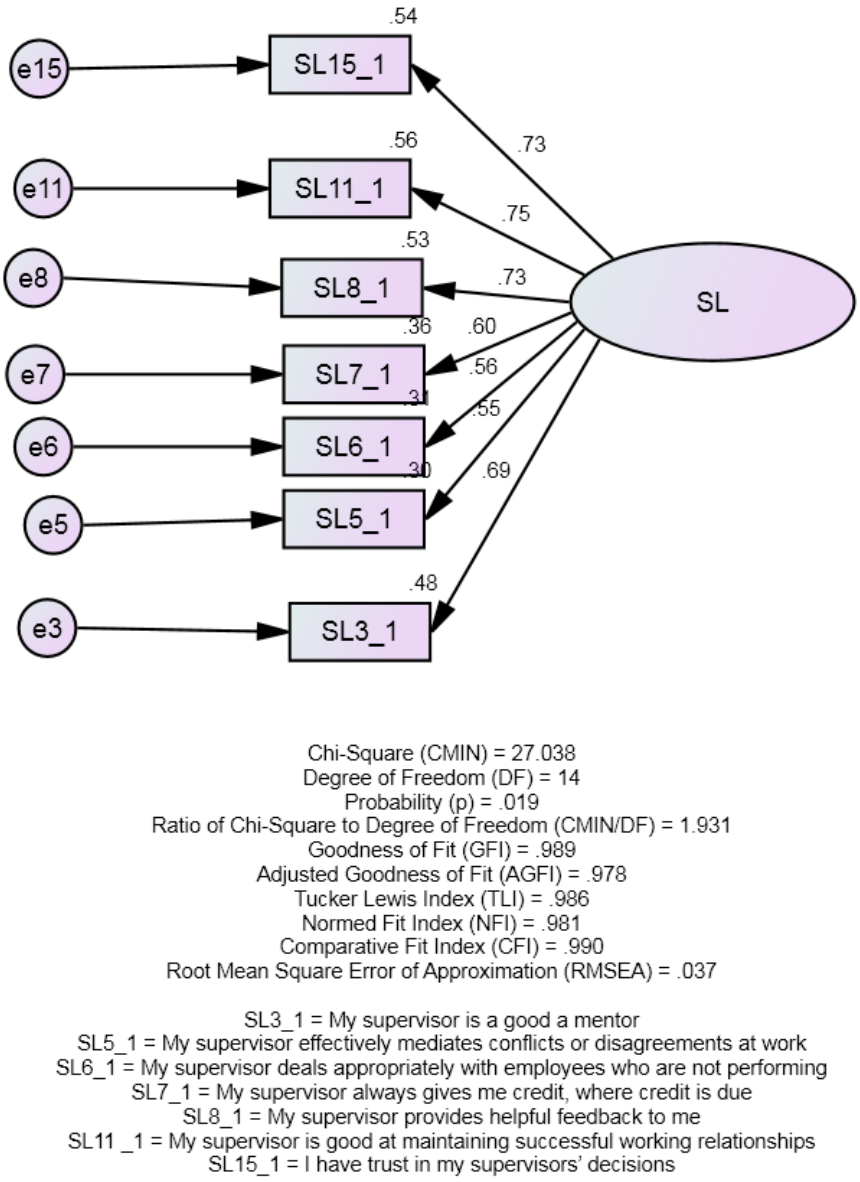

Figure 3.5 CFA supervisory leadership measurement model

3.17.6 Diversity and anger management measurement model

A confirmatory factor analysis (CFA) was run using seventeen items (adapted from Stein, 2005) as observed variables and three latent (unobserved) variables called diversity climate, diversity acceptance and anger management for diversity and anger management dimension of OEI. Results are presented in table 3.8.

Table 3.8 Summary statistics for diversity and anger management measurement model

Variable	X^2	DF	X^2/DF	P	NFI	GFI	AGFI	TLI	CFI	RMSEA
DIVMGT	14.76	11	1.34	.194	.981	.994	.984	991	.995	.023

			Estimate	S.E.	C.R.	P	B
DC3_1	<---	DC	1.000				.716
DC4_1	<---	DC	1.005	.135	7.453	***	.714
DA1_1	<---	DA	1.000				.608
DA2_1	<---	DA	.898	.097	9.287	***	.586
AM2_1	<---	AM	1.000				.531
AM6_1	<---	AM	1.209	.122	9.912	***	.677
AM7_1	<---	AM	1.085	.111	9.765	***	.633

CFA for diversity and anger management (DI) reported in table 3.8 generated a chi-square of 14.76 at p-value .194 (non-significant at .05), thus suggesting a good model fit. Other fit indices reported include C/MIN/DF =1.34, GFI =.994, AGFI =984, NFI = 981, CFI = 995, TLI = 991, and RMSEA = .023, all confirming an acceptable good model fit. The critical ratios were greater than 1.96 and p-values were l**e**ss than .001, indicating the existence of significant relationships between observed variables (items) and the unobserved variable (diversity and anger management).In addition, observed multiple regression (standardised coefficients) were greater than 0.4, considered an acceptable level of each item reliability. Normed Fit Index (NFI) was greater than .90 and squared multiple correlation was greater than .20, signifying convergent validity and reliability. In conclusion, based on GFI (>.90) and RMSEA (≤.05) (Field, 2009; Hair et al., 2010; Van der Eijk and Rose, 2015), the observed structure of diversity and anger

management among public servants in Uganda had a good model fit. The measurement model is represented in figure 3.6.

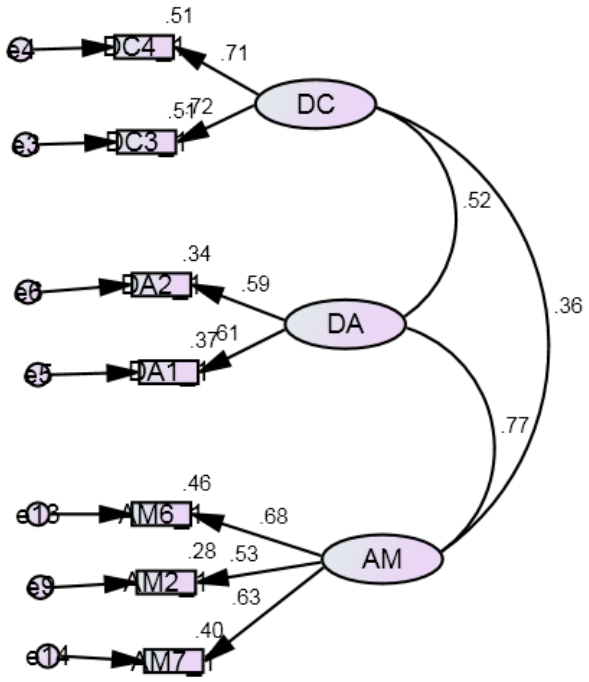

Chi-Square (CMIN) = 14.756
Degree of Freedom (DF) = 11
Probability (p) = .194
Ratio of Chi-Square to Degree of Freedom (CMIN/DF) = 1.341
Goodness of Fit (GFI) = .994
Adjusted Goodness of Fit (AGFI) = .984
Tucker Lewis Index (TLI) = .991
Normed Fit Index (NFI) = .981
Comparative Fit Index (CFI) = .995
Root Mean Square Error of Approximation (RMSEA) = .023

DC3_1 = People here are treated fairly regardless of age, race, gender, physical limitations, or disability
DC4_1 = People in this organization are treated fairly, regardless of age
DA1_1 = Some people have experienced tribal harassment or tribal intimidations at this organization
DA2_1 = Some people within this organization have been discriminated against because of their tribe*
AM2 _1 = During the past 6 months, there have been times when individuals have been upset that they lost control of themselves while at work*
AM6_1 = During the past 6 months, there have been conflicts here at work involving shouting and name calling*
AM7_1 = During the past 6 months, there have been physical confrontations between individuals here at my work place*

Figure 3.6 CFA diversity and anger management measurement model

3.17.7 Organisational responsiveness measurement model

A confirmatory factor analysis (CFA) was run using 47 items (adapted from Stein, 2005) as observed variables and four latent (unobserved) variables called training and innovation, optimistic integrity, courageous adaptability and top leadership for organisational responsiveness dimension of OEI. Results are presented in table 3.9.

Table 3.9 Summary statistics for organisational responsiveness measurement model

Variable	X^2	DF	X^2/DF	P	NFI	GFI	AGFI	TLI	CFI	RMSEA
(ORE)	43.23	24	1.80	.009	.977	.986	.974	984	.990	.035

			Estimate	S.E.	C.R.	P	B
TI1_1	<---	TI	1.000				.675
TI3_1	<---	TI	1.099	.090	12.246	***	.672
OI5_1	<---	OI	1.000				.602
OI8_1	<---	OI	1.092	.083	13.192	***	.640
OI9_1	<---	OI	1.015	.078	13.093	***	.634
OI11_1	<---	OI	1.208	.089	13.606	***	.668
CA10_1	<---	CA	1.000				.680
CA15_1	<---	CA	.837	.064	13.135	***	.552
OI12_1	<---	OI	1.323	.090	14.657	***	.746

CFA for organisational responsiveness (ORE) reported in table 3.9generated a chi-square of 43.23 at p-value .009 (significant at .05), thus suggesting a poor model fit. However, other fit indices reported include C/MIN/DF =1.80, GFI =.986, AGFI =974, NFI = 977, CFI = 990, TLI = 984, and RMSEA = .035, all supporting an acceptable good model fit. The critical ratios were greater than 1.96 and p-values were less than .001, indicating the existence of significant

relationships between observed variables (items) and the unobserved variable (organisational responsiveness).In addition, observed multiple regression (standardised coefficients) were above 0.40, and are considered an acceptable level of each item reliability. Normed Fit Index (NFI) was greater than .90, and squared multiple correlations were greater than .20, signifying convergent validity and reliability. In conclusion, based on GFI (>.90) and RMSEA (≤.05) (Field, 2009; Hair et al., 2010; Van der Eijk and Rose, 2015), the observed structure of organisational responsiveness among public servants in Uganda has a good model fit. The measurement model for organisational responsiveness is represented in figure 3.7.

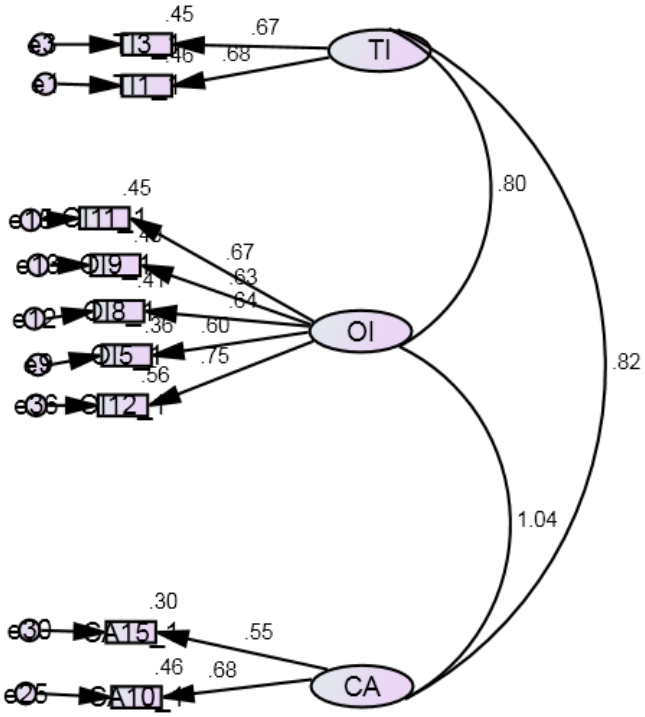

Chi-Square (CMIN) = 43.235
Degree of Freedom (DF) = 24
Probability (p) = .009
Ratio of Chi-Square to Degree of Freedom (CMIN/DF) = 1.801
Goodness of Fit (GFI) = .986
Adjusted Goodness of Fit (AGFI) = .974
Tucker Lewis Index (TLI) = .984
Normed Fit Index (NFI) = .977
Comparative Fit Index (CFI) = .990
Root Mean Square Error of Approximation (RMSEA) = .035

TI1_1 = The training in my workplace is based on what I really need to get the job done
TI3_1 = This organization adequately uses knowledge, skills or training that its employees currently have
OI8_1 = This organization's positive atmosphere energizes me
OI9 _1 = In attempting to reach goals, this organization's action reflect what they claim to stand for
OI11_1 = This organization consistently operates on principles of integrity
OI12_1 = This organization takes seriously the comments and needs of customers and clients
CA10_1 = This organization has the courage to address its mistakes
CA15_1 = The organization has courage to confront difficult issues

Figure 3.7 CFA organisational responsiveness measurement model

3.17.8 Organisational positive impression measurement model

A confirmatory factor analysis (CFA) was run using eight items (adapted from Stein, 2005) as observed variables and one latent (unobserved) variable called positive impression. Results are presented in table 3.10.

Table 3.10 Summary statistics for organisational positive impression measurement model

Variable	X^2	DF	X^2/DF	P	NFI	GFI	AGFI	TLI	CFI	RMSEA
PI	3.70	2	1.85	.157	.991	.997	.986	988	.996	.036

			Estimate	S.E.	C.R.	P	B
PI2_1	<---	PI	.940	.122	7.688	***	.420
PI3_1	<---	PI	1.000				.478
PI6_1	<---	PI	1.522	.156	9.761	***	.661
PI7_1	<---	PI	1.720	.181	9.521	***	.795

The CFA for positive impression (PI) reported in table 3.10generated a chi-square of 11.30 at p-value .255 (not significant at .05), thus suggesting a good model fit. Other fit indices reported include C/MIN/DF =3.70, GFI =.997, AGFI =986, NFI = 991, CFI = 996, TLI = 988, and RMSEA = .036, all confirming an acceptable good model fit. The critical ratios were above 1.96 and p-values were less than .001, indicating the existence of significant relationships between observed variables (items) and the unobserved variable (organisational positive impression).In addition, observed multiple regression (standardised coefficients) were greater than 0.4, considered an acceptable level of each item reliability. Normed Fit Index (NFI) was greater than .90, and squared multiple correlations were greater than .20; signifying convergent validity and reliability. In conclusion, based on GFI (>.90) and RMSEA (≤.05) (Field, 2009; Hair et al.,

2010; Van der Eijk and Rose, 2015), the observed structure of organisational positive impression among public servants in Uganda has a good model fit. The measurement model for positive impression is represented in figure 3.8.

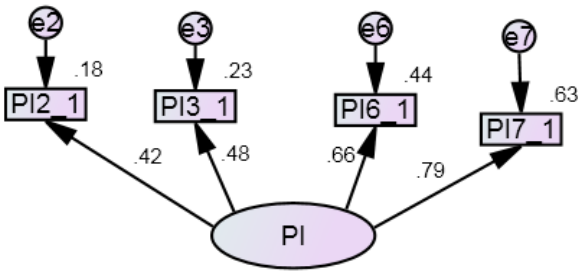

Chi-Square (CMIN) = 3.70
Degree of Freedom (DF) = 2
Probability (p) = .157
Ratio of Chi-Square to Degree of Freedom (CMIN/DF) = 1.850
Goodness of Fit (GFI) = .997
Adjusted Goodness of Fit (AGFI) = .986
Tucker Lewis Index (TLI) = .988
Normed Fit Index (NFI) = .991
Comparative Fit Index (CFI) = .996
Root Mean Square Error of Approximation (RMSEA) = .036

PI2_1 = I do not have problems with my workplace*
PI3_1 = I am completely honest with my supervisor
PI6_1 = This organization functions perfectly
PI7 _1 = I am very proud to work here

Figure 3.8 CFA positive impression measurement model

3.17.9 Organisational emotional intelligence measurement model

A confirmatory factor analysis (CFA) was run, using eight dimensions (adapted from Stein, 2005) as observed variables and one latent (unobserved) variable called organisational emotional intelligence. The initial results reported a poor model fit of AGFI = .851, and RMSEA = .133. (See initial model –appendix16.) The test was rerun after model re-specification, by deleting the work–life balance dimension, which had insignificant path coefficient. Results are presented in table 3.11.

Table 3.11 Summary statistics for OEI measurement model

Variable	X^2	DF	X^2/DF	P	NFI	GFI	AGFI	TLI	CFI	RMSEA
OEI	70.07	14	5.0	.000	.973	.972	.944	.967	.978	.077

			Estimate	S.E.	C.R.	P	B	AVE	CR	A
PI_2	<---	OEI	1.000				.783	.559	.737	.880
OR_2	<---	OEI	.983	.040	24.874	***	.872			
DI_2	<---	OEI	.495	.040	12.450	***	.483			
SL_2	<---	OEI	.963	.044	22.045	***	.800			
OC_2	<---	OEI	.987	.042	23.290	***	.831			
CS_2	<---	OEI	.756	.046	16.396	***	.615			
JH_2	<---	OEI	.863	.040	21.393	***	.776			

The CFA for organisational emotional intelligence (OEI) presented in table 3.11 generated a chi-square of 70.07 at p-value .000 (significant at .05), thus suggesting a poor model fit. However, other fit indices reported include C/MIN/DF =5.0, GFI =.972, AGFI = .944, NFI = .973, CFI = .978, TLI = .967, and RMSEA = .077 (RMSEA below 0.08 is considered acceptable) (Field, 2009), all confirming an acceptable model fit. The critical ratios were above 1.96 and p-values

were less than .001, indicating the existence of significant relationships between observed variables and the unobserved variable (OEI). Further, all multiple regression weights(standardised coefficients)were all above 0.5, confirming the existence of relationship between organisational emotional intelligence and its dimensions.NFI is greater than 0.90,indicating a convergent validity among the constructs of organisational emotional intelligence. The squared multiple regression (R^2) is all above .20, indicating construct validity and reliability of organisational emotional intelligence variable. Further, composite reliability (CR) was .739 (should be ≥ .6) and average variance extracted (AVE) was .559 (should be ≥ .5), calculated manually using the formula provided by Fornell and Larcker (1981), indicating good variable reliability and convergent validity. In addition, Cronbach's alpha value was .880 (should be ≥ .7), further confirming scale reliability. In conclusion, based on the observed structure of organisational emotional intelligence among public servants in Uganda is a seven-dimension variable – contrary to the eight hypothesised variable structures of organisational emotional intelligence (adapted from Stein, 2005). The measurement model for organisational emotional intelligence is represented in figure 3.9.

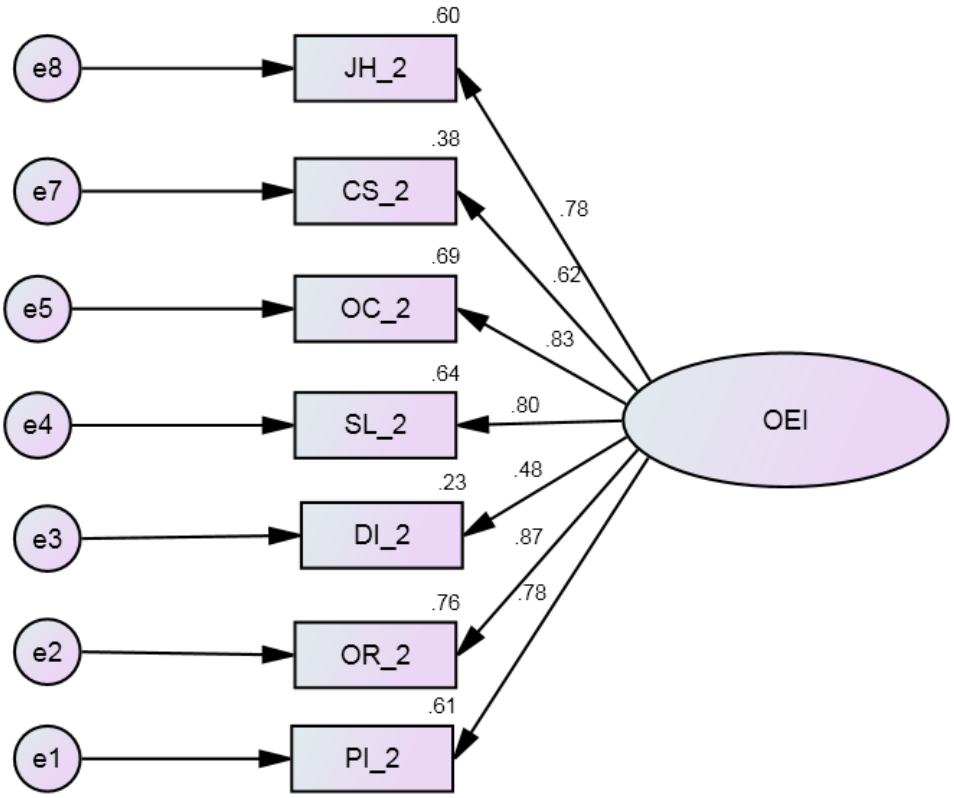

JH_2 = Job Happiness
CS_2 = Compensation Satisfaction
OC_2 = Organisational Cohesiveness
SL_2 = Supervisory Leadership
DI_2 = Diversity and Anger Management
OR_2 = Organisational Responsiveness
PI_2 = Organisational Positive Impression

Figure 3.9 CFA OEI measurement model

3.17.10 Psychological capital measurement model (DV)

A confirmatory factor analysis (CFA) was run using four scales (Luthans et al., 2007) as observed variables and one (unobserved) variable called psychological capital. Results are presented in table 3.12.

Table 3.12 Summary statistics for PsyCap measurement model

Variable	X^2	DF	X^2/DF	P	NFI	GFI	AGFI	TLI	CFI	RMSEA
PCP	4.59	2	2.2	.100	.993	.997	.984	988	.996	.044

			Estimate	S.E.	C.R.	P	B	AVE	CR	α
RE_2	<---	F1	1.000				.662	.500	.668	.760
OP_2	<---	F1	.924	.071	13.103	***	.632			
HO_2	<---	F1	1.158	.083	13.930	***	.799			
EF_2	<---	F1	.895	.075	11.854	***	.579			

The CFA for psychological capital (PCP) presented in table 3.12 generated a chi-square of 4.59 at p-value .100, without modification to the model, thus suggesting a good model fit. In addition, other fit indices reported include C/MIN/DF =2.2, GFI =.997, AGFI = .984, NFI = .993, CFI = .996, TLI = .988, and RMSEA = .044, all confirming an acceptable good model fit. The critical ratios were above 1.96 and p-values were less than .001, indicating the existence of significant relationships between observed variables and the unobserved variable (PsyCap). In addition, regression weights were all above 0.5, with the respective standard errors confirming the existence of a relationship between psychological capital and its constructs. NFI is .993 (> .90), indicating a convergent validity among the items of psychological capital. The squared multiple regression (R^2) is all above .20, indicating construct validity and reliability of psychological capital variable. Further, composite reliability (CR) was .668 (should be ≥ .6) and average

variance extracted (AVE) was .500 (should be ≥ .5) calculated manually, using the formula provided by Fornell and Larcker (1981), indicating good construct reliability and convergent validity. In addition, Cronbach's alpha value was .760 (should be ≥ .7), further confirming scale reliability. In conclusion, the observed structure of psychological capital among public servants in Uganda is a four-dimension variable, the same as the hypothesised variable structure of psychological capital (adapted from Luthans et al., 2007). The variable measurement model for psychological capital is represented in figure 3.10.

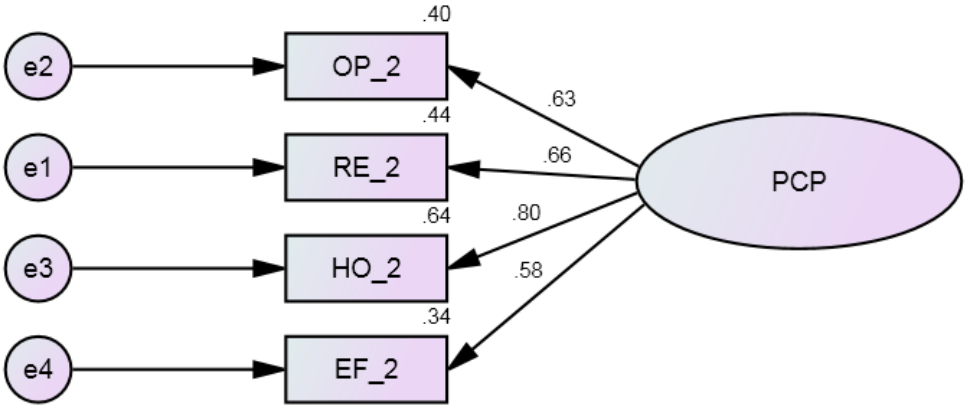

Chi-Square (CMIN) = 4.598
Degree of Freedom (DF) = 2
Probability (p) = .100
Ratio of Chi-Square to Degree of Freedom (CMIN/DF) = 2.299
Goodness of Fit (GFI) = .997
Adjusted Goodness of Fit (AGFI) = .984
Tucker Lewis Index (TLI) = .988
Normed Fit Index (NFI) = .993
Comparative Fit Index (CFI) = .996
Root Mean Square Error of Approximation (RMSEA) = .044

EF_2 = Self Efficacy
HO_2 = Hope
OP_2 = Optimism
RE_2 = Resilience

Figure 3.10 CFA psychological capital measurement model

3.18 Data analysis applied

This study applied correlation analysis, regression analysis and structural equation modelling in order to answer the research questions.

Correlation analysis was used to determine the association between continuous study variables, that is the independent variables (OEI dimensions) and dependent variable (PsyCap) and between independent variables (job happiness, compensation satisfaction, work life balance, supervisory leadership, organisational cohesiveness, organisational responsiveness, diversity management and positive impression (Table 4.9).

In correlation analysis, a sample of correlation coefficient was estimated using the Pearson Product Moment Correlation coefficient. The sample correlation coefficient denotes r, ranges from -1 and +1; which was used to determine the direction and strength of the linear association between the variables OEI and PsyCap. The sign of the correlation coefficient indicates the direction of the association. The correlation between two variables can be positive implying that higher levels of one variable are associated with higher levels of the other or negative implying that higher levels of one variable are associated with lower levels of the other (Field, 2009). Further, the magnitude of the correlation coefficient indicates the strength of the association. For instance, a correlation of r = 0.9 suggests a strong, positive association between variables, whereas a correlation or r = -0.2 suggest a weak, negative relationship; while a correlation close to zero suggests no linear association between continuous variables (Bartz, 1999). However, it should be noted that association does not mean causality (Field, 2009).

Correspondingly, regression analysis is a related technique to correlation analysis used to access the association between an outcome variable (response or dependent variable) and one or more

independent variables (can also be called risk factors or confounding variables or predictors or explanatory variables). In regression analysis, the dependent variable is denoted by "y" and the independent variable is denoted by 'x'. However the term 'predictor' should not be interpreted to mean the ability to predict even outside the limits of the data; neither should the term 'explanatory variable' give the impression of a causal effect in a situation in which inferences should be limited to identifying associations (Field, 2009).

In correlation analysis, the correlation coefficient is the measure of the strength of association; while in regression analysis it's the slope that is used to measure the strength of the association. R (R-squared) is used in the context of regression as a measure of how much of the variability in the dependent variable can be accounted for by the difference in the independent variable (Field, 2009). That is the proportion of Y (PsyCap) that can be attributed to the presences of the exposure of X (dimensions of OEI).

It is imperative to note that there may be a non-linear association between variables, but computation of a correlation coefficient does not detect this. Thus it is important to first evaluate the data carefully before computing a correlation coefficient (Field, 2009). Graphical displays were useful to explore association between variables (Appendix 13).

The Structural Equation Modelling (SEM) technique was used to simultaneously determine the reliability, validity and relationship between variables, by estimating Cronbach alphas, loadings, path coefficients and model fit (Hair et al., 2010). SEM is characterised by evaluating relationships between latent (not directly measureable) variables. SEM may use the variance-based causal modelling approach, which uses Partial Least Squares, or the covariance-based

approach, which uses LISREL (Linear Structural Relation), or Analysis of Moments Structures (AMOS) or MPlus.

SEM is a second generation modelling technique that goes beyond the traditional, first generation analysis technique of correlation, multiple regression, multivariate analysis of variance and factor analysis. SEM is used to estimate more complex path models (Hair et al., 2010), by combining the elements of path and factor analysis in one comprehensive model. With SEM, both the measurement and relationship models are estimated simultaneously by analysing indicator variables of latent variables specified by the measurement (outer) model, while the relationship between latent variables is specified by the structural (inner) model. Partial List Squares (PLS) is said to be distribution-free, and operates even within small samples. However, LISREL, AMOS and MPlus software requires normal distributed and large samples to be used for analysis.

The researcher used AMOS version 19 to analyse data for this study. Generally, SEM models were analysed and interpreted as follows: Individual item loadings of measures with their respective construct loadings should be higher than 0.7 for consideration, as these indicate the best validity, though lower loadings ranging between 0.4 and 0.5 were considered acceptable (Field, 2009).Composite reliability (CR), a measure for internal consistency of items and discriminant validity, was calculated using a formula by Fornell and Larcker (1981). A value of 0.6 is considered to be a good level of composite reliability (Fornell and Larcker, 1981), and average variance extracted (AVE) was greater than 0.50 (both reported in appendix 15), which signifies discriminant validity.

The relationship assessment model followed the measurement model interpretation. The objective was to explain variances, so standardised regression weights (R^2 values) were used. Higher R^2 presents better model variance explanations and thus have a higher predictive power. A value of 0.67 is considered substantial, greater than 0.33 is considered average, while less than 0.19 is considered weak (Field, 2009). Details of correlations, regression and SEM are presented and interpreted in chapter 4.

3.19 Research ethical values

The researcher acquired clearance from the ethics committee of the University of Witwatersrand to undertake the study on organisational emotional intelligence and psychological capital (See appendix 17 – Ethics Committee Clearance Certificate). The researcher identified a contact person in the HR department of organisations who accepted participating in the study. The researcher approached employees willing to voluntarily participate in the study. These were assured of respondents' confidentiality and anonymity. The respondents were not expected to indicate their names; the researcher assured them that no individual data would be analysed independently and that the results would only be used for academic purposes in knowledge creation and dissemination as one of the requirements for an academic staff development avenue at Makerere University Business School.

In the next chapter details of correlations, regressions and structural equation models are presented and interpreted, based on study objectives and hypotheses as developed from theoretical and literature review.

CHAPTER 4: PRESENTATION AND INTERPRETATION OF RESULTS

4.1 Introduction

This chapter presents the results of the study. The results of the analysis are based on the confirmatory factor analysis (CFA) for measurement models reported in chapter three. The structural equation models (SEM) are based on the study hypotheses.

The study was guided by the following key objectives:

1. To investigate whether a significant positive association exists between organisational emotional intelligence (OEI) and employee psychological capital among public servants in Uganda.

2. To examine whether there was a significant positive association between each dimension of OEI and employee psychological capital among public servants in Uganda.

To answer the research objectives, the study was guided by the following hypotheses:

$H_{1:}$ Overall organisational emotional intelligence (OEI) is significantly and positively associated with employee psychological capital (PsyCap) among public servants.

$H_{1a:}$ Overall organisational emotional intelligence (OEI) is positively associated with the self-efficacy dimension of employee PsyCap among public servants.

$H_{1b:}$ Overall organisational emotional intelligence (OEI) is positively associated with the hope dimension of employee PsyCap among public servants.

$H_{1c:}$ Overall organisational emotional intelligence (OEI) is positively associated with the resilience dimension of employee PsyCap among public servants.

$H_{1d:}$ Overall organisational emotional intelligence (OEI) is positively associated with the optimism dimension of employee PsyCap among public servants.

$H_{1e:}$ Overall organisational emotional intelligence (OEI) is positively associated with the employee PsyCap among public servants.

$H_{2:}$ Each dimension of organisational emotional intelligence (OEI) is positively associated with employee psychological capital (PsyCap).

H_{2a}: The job happiness (JH) dimension of OEI is positively associated with employee PsyCap among public servants.

$H_{2b:}$ The compensation satisfaction (CS) dimension of OEI is positively associated with employee psychological capital among public servants.

H_{2c}: The work–life balance (WL) dimension of OEI is positively associated with employee psychological capital among public servants.

H_{2d}: The supervisory leadership (SL) dimension of OEI is positively associated with employee PsyCap among public servants.

H_{2e}: The organisational cohesiveness (OC) dimension of OEI is positively associated with employee PsyCap among public servants.

H_{2f}: The organisational responsiveness (OR) dimension of OEI is positively associated with employee PsyCap among public servants.

H_{2g}: The diversity management (DI) dimension of OEI is positively associated with employee PsyCap among public servants.

H_{2f}: The positive impression (PI) dimension of OEI is positively associated with employee PsyCap among public servants.

4.2 Sample characteristics

4.2.1 Response rate

Following guidelines for sample selection, a total of 1000 questionnaires was distributed for the study. The summary of the response rate follows.

Table 4.1 Response rate

Questionnaires distributed	1000
Questionnaires returned	797
Usable questionnaires	668
Usable response rate	66.8%

Primary Source

The response rate is presented in table 4.1; 1000 questionnaires were distributed; 797 (79.7%) were willing to participant in the study; however, only 668 (66.8%) were found usable for data analysis.

4.2.2 Study participants by public sector category

The participants in the study were employed in different public sector organisations. The following is a summary of number of participants from each type of organisation.

Table 4.2 Study participants by public service sector

	Frequency	Percent
Ministry	140	21.1
Authority	154	23.2
Commission	48	7.2
Government board	7	1.1
Local government administration	87	13.1
Government agency	107	16.1
State enterprise (company)	66	10.0
Training institution	59	8.2
Total	668	100.0

Primary Source

Table 4.2 shows that the majority of participants in the study 154 (23.3%) were from government authorities, followed by 140 (21%) participants from government ministries, then 107 (16.0%) from government agencies, 87 (13.0%) from local government, 66 (9.9%) from state enterprises, 54 (8.1%) from training institutions, 48 (7.2%) from commissions and the lowest number is 7 (1.1%) from government boards.

4.2.3 Study participants by functional department

The participants indicated the functional department where they were employed in the public sector organisation. Following is a summary of their responses.

Table 4.3 Participants by functional department

Functional department	Frequency	Percent
Finance or accounting	94	14.1
Human resource management	111	16.6
Marketing, public relations and communications	34	5.1
Procurement and logistics	57	8.5
Administration and operations	179	26.8
Information Technology Management	37	5.5
Corporate affairs	15	2.2
Other	142	21.0
Total	668	100.0

Primary Source

Table 4.3 shows the breakdown of partipants by functional department. It can be seen that the majority 179 (26.8%) of the participants were from operations and administration departments, followed by 140 (21.0%) from human resource management departments, then 94 (14.1%) from finance and accounting, 57 (8.5%) from procurement and logistics, 37 (5.5%) from information technology management, 34 (5.1%) from marketing and public relations, and 15 (2.2%) from corporate affairs. However, a considerable number 142 (21.0%) of participants did not specify one of the traditional departments.

4.2.4 Study participants by gender

Participants indicated their gender. Here is a summary of their responses.

Table 4.4 Gender of study participants

Gender	Frequency	Percent
Female	266	39.5
Male	402	60..5
Total	668	100.0

Primary Source

It can be seen in Table 4.4 that the majority of respondents were male, 402 (60.5), as against 266 (39.5) female respondents.

4.2.5 Study participants by age

Participants in the study indicated their age. Here follows a summary of their responses.

Table 4.5 Age of respondents

Age	Frequency	Per cent
Below 25 years	107	16.0
25-34 years	287	43.0
35-54 years	253	37.9
55years+	21	3.1
Total	668	100.0

Primary Source

Table 4.5 shows that the majority (287) of the respondents were aged between 25 and 34 years (43.0%), followed by 253 aged between 35 and 54 years (37.9%), followed by 94 respondents below 25 years of age (16.0%), while only 21 (3.1) were above 55 years of age.

4.2.6 Response rate in terms of educational level

Participants in the study indicated their highest educational level. The summary of their responses is reported here.

Table 4.6 Educational level of respondents

Highest Educational Level	Frequency	Percent
O' Level	55	8.2
A' Level	59	8.8
Bachelor's degree	297	44.5
Master's degree	179	26.8
Others	78	11.6
Total	668	100.0

Primary Source

Table 4.6 shows that many of the employees who participated in the study held qualifications higher than a bachelor's degree. The majority 297 (44.5%) of participants held a bachelor's degree, 179 (26.8%) held a master's degree; while 114 (17.6%) did not hold any degree, and 78 (11.6) held other unspecified qualifications.

4.2.7 Response rate in terms of public service work experience

Participants in the study indicated their years of experience in public service. Here is a summary of their responses.

Table 4.7 Public service work experience

Work Experience	Frequency	Percent
1-5years	226	33.8
6-10 years	195	29.2
11-15 years	156	23.4
16years and above	68	10.2
Other	23	3.4
Total	668	100.0

Primary Source

Table 4.7 indicates that the majority of employees who participated in the study had more than five years of public service experience. Of these, 195 (29.2%) had 6 to10 years of public service experience; 156 (23.4%) had 11 to 15 years; while 68 (10.2%) had over 21 years' experience; 23 participants did not specify (3.4%).

4.2.8 Descriptive statistics on study variables

Analysis of descriptive statistics (means and standard deviations) shows to what extent the means represent the goodness of data (Field, 2009).

Table 4.8 Descriptive statistics for study variables

	N	Min	Max	Mean	S.E	Std. D	Var
PCP	668	1.00	7.00	5.21	.026	.683	.467
JH	668	1.00	7.00	4.66	.038	.996	.993
CS	668	1.00	7.00	3.54	.042	1.100	1.211
WL	668	1.00	7.00	4.14	.024	.628	.395
OC	668	1.00	7.00	4.39	.041	1.063	1.131
DA	668	1.00	7.00	5.24	.035	.917	.842
OR	668	1.00	7.00	4.58	.039	1.010	1.021
PI	668	1.00	7.00	4.26	.044	1.144	1.309

Primary Source

Table 4.8 indicates that the mean scores for the study variables fall between 3.54 for compensation satisfaction (as the lowest score) and 5.21 for psychological capital (as the highest score) on an anchor of a seven-point Likert scale. In all study cases, it is greater than 2.5 the standard deviation or 10 times the standard error; this signifies that the mean is a good representative value of the data. All the scores for the study variables are above the mid-score (3.5), corresponding to the extent to which dimensions of organisational emotional intelligence and employee psychological are present among public servants in Uganda. High scores (above 4.0) indicate that dimensions of organisational emotional intelligence and psychological capital in the public sector are available, while lower scores (below 3.0) indicate inadequate availability (Field, 2009).

In order to understand the relationships between study variables and to answer the research questions, correlation analysis, regression analysis and structural equation modelling were carried out.

4.3 Correlation analysis of study variables

Correlation coefficients were calculated using Pearson's Product Moment, using SPSS; version 20 (table 4.9). Correlation analyses establish the relationship between two variables or group of variables. It provides direction of the relationship between the variables and magnitude of the relationship, in addition to the level of significance between the relationships. The significance is the p-value that is interpreted. If the p-value is less than .05, then there is a statistically significant bivariate association between the continuous variables. If the p-value is more than .05, then this is evidence that there is not a statistically significant association between the two continuous variables. Higher r coefficients denote a stronger magnitude of relationship between variables, while smaller coefficients denote weaker relationships between study variables.

Positive correlations denote a relationship that indicates movements in the same direction; as one goes up, then the other goes up; also, as one value goes down then the other values goes down. Negative correlations denote a relationship that moves in different directions – as one value goes up the other value goes down; also as one value goes down, then other value goes up.

The interpretation of the relationship among variables is based on the correlation coefficients (r) (Bartz, 1999):

(1) between 0 and.19 indicates a very low correlation;

(2) between .20 and.39 indicates a low correlation;

(3) between .40 and .59 indicates moderate correlation;

(4) between .60 and .79 indicates a strong correlation; and

(5) between .80 and 1.00 indicates a high correlation.

The results of the correlation between study variables are presented in table 4.9.

Table 4.9 Correlations between OEI, its dimensions and psychological capital

	JH	CS	WB	OC	SL	DI	OR	PI	OE1	Psy
JH	1									
CS	.429**	1								
WB	.105**	-.088*	1							
OC	.640**	.553**	.007	1						
SL	.589**	.469**	.037	.705**	1					
DI	.085*	-.029	.232**	.081*	.074	1				
OR	.677**	.572**	-.013	.695**	.660**	.151**	1			
PI	.590**	.538**	.066	.637**	.573**	.113**	.653**	1		
OEI	.786**	.709**	.034	.838**	.798**	.252**	.846**	.808**	1	
PsyCap	.477**	.268**	.072	.437**	.462**	.107**	.416**	.404**	.498**	1

**. Correlation is significant at the 0.01 level (2-tailed).

*. Correlation is significant at the 0.05 level (2-tailed).

The correlation results reported in table 4.9 indicatethe relationship between organisational emotional intelligence, and its separate dimensions, and psychological capital as follows: overall organisational emotional intelligence (r = 498, p <.01); job happiness (r = 477,p <.01); compensation satisfaction (r = 268, p <.01); work–life balance (r = 072, p = ns); organisational cohesiveness(r = 437, p <.01); supervisory leadership (r = 462, p <.01); diversity management (r = 107, p <.01); organisational responsiveness(r = 416, p <.01); and positive impression (r = 404, p <.01). Thus, the results show that all correlation coefficients, except for work–life balance, were positive and significant, which signifies that overall organisational emotional intelligence and its dimensions are positively related to psychological capital, except for work–life balance. This means that when organisational emotional intelligence increases, psychological capital increases as well. The correlation coefficients range from low to moderate levels (Bartz, 1999).

These findings support the hypothesis that organisational emotional intelligence is positively associated with psychological capital.

However, a correlation coefficient does not necessarily mean that there is a causal influence of organisational emotional intelligence on psychological capital. Therefore, the researcher further carried out a regression analysis to test the prediction potential of OEI on PsyCap. All the dimensions of organisational emotional intelligence were treated as independent variables (job happiness, compensation satisfaction, work–life balance, organisational cohesiveness, supervisory leadership, diversity management, organisational responsiveness and positive impression) and were regressed on the dependent variable (psychological capital). To control for demographic characteristics, hierarchical regression was employed by entering the demographic variables (age, gender, education, experience, managerial level, functional department and organisational category) first in the model.

The reason for conducting a regression analysis was to determine whether the regression coefficients of the given predictor set of variables were statistically different from zero. When the coefficients are significant, it proves that the respective predictor variables are relatively important in predicting the criterion variable (psychological capital). The results are interpreted using non-standardised beta coefficients and R-squared. Unstandardised coefficients show a change that is observable when the variables are in raw form. They are not standardised in the sense that they have different means, and different standard deviations. The higher the beta coefficients of the independent (predictor) variable are, the more predictive power they have on the dependent (criterion) variable, if the coefficient is significant. The R-square change indicates the percentage of the variance in the dependent variable, which is explained jointly by the

independent variables (Hair et al., 2010). The results of the regression analysis are presented in table 4.10.

Table 4.10 Summary of regression analysis results (OEI dimensions on PsyCap)

Predictor	B	Beta	T	Sig.
Constant	3.331		18.23	.000
Age		-.024	.513	.608
Gender		.055	-1.623	.104
Education		.033	.935	.350
Experience		-.053	1.143	.253
Position		.038	-1.123	.262
Department		-.044	1.338	.181
Sector		-.048	-1.451	.147
Job happiness		.299	6.190	.000
Organisational responsiveness		.137	2.415	.015
Supervisory leadership		.097	2.026	.043
Positive impression		.092	1.976	.049
Compensation satisfaction		-.038	-.935	.350
Work–life balance		.041	1.244	.214
Organisational cohesiveness		.047	.882	.378
Diversity management		.044	.1.199	.231
R		*.560*		
R Square		*.314*		
Adjusted R Square		*.302*		
F		*27.293*		
Sig		*.000*		

The multiple regression analysis shown in table 4.10indicates that the model accountedfor30.2% of the variance in psychological capital at $p \leq 0.000$. This further supports the research hypothesis that organisational emotional intelligence is positively associated with psychological capital. In other words, OEI influences psychological capital positively.

4.4 Structural equation model

In addition to the correlation analysis and regression analysis, a structural equation model was carried out. The model specification depended on the predictor variables (OEI dimensions) and criterion variable (employee psychological capital).The model posited that psychological capital is a function of OEI dimensions, that is: PsyCap = f (OEI dimensions); where the OEI dimensions are = JH, CS, OC, SL, DI, OR, PI; the abbreviations represent the following:

PsyCap = Psychological Capital

JH = Job Happiness

CS = Compensation Satisfaction

OC = Organisational Cohesiveness

SL = Supervisory Leadership

DI = Diversity Management

OR = Organisational Responsiveness

PI = Organisational Positive Impression

In order to investigate the association between organisational emotional intelligence and psychological capital, the study first investigated the effect of demographic variables on PsyCap, in order to control for them in the model between OEI and PsyCap. By controlling for demographic variables, their effect is spread across the study variables; thus, the analysis is able to discern the effect of the independent variables (OEI dimensions) on PsyCap. First, a model of demographic variables only and psychological capital is specified. The summary of statistical results is presented in table 4.11.

Table 4.11 Summary statistics for SEM demographics and psychological capital

Variable	X^2	DF	X^2/DF	P	NFI	**GFI**	**AGFI**	**TLI**	**CFI**	**RMSEA**
PXs-PCP	45.49	24	1.89	.005	.996	**.988**	**.966**	**961**	**.983**	**.037**

			Estimate	S.E.	C.R.	P	B
PCP	<---	GEN_1	-.031	.049	-.621	.534	-.028
PCP	<---	AGE_1	.004	.044	.086	.931	.005
PCP	<---	EDU_1	.071	.025	2.905	.004	.134
PCP	<---	EXP_1	.036	.033	1.091	.275	.067
PCP	<---	POS_1	.007	.027	.248	.804	.011
PCP	<---	SECT_1	-.007	.009	-.712	.476	.-031
PCP	<---	DEPT_1	.005	.010	.545	.585	.024
EF_2	<---	PCP	1.000				.580
HO_2	<---	PCP	1.285	.098	13.067	***	.795
RE_2	<---	PCP	1.123	.095	11.861	***	.667
OP_2	<---	PCP	1.032	.089	11.620	***	.633

Primary Source

The initial structural equation model (SEM) for only demographic characteristics and psychological capital (table 4.11) generated a chi-square of 45.49 at p-value .005, thus suggesting a poor model fit. However, other fit indices reported include C/MIN/DF =1.89, GFI =.988, AGFI =966, NFI = 996, CFI = 983, TLI = 961, and RMSEA = .037; all supporting an acceptable model fit. The critical ratios were above 1.96 and p-values were significant for only education (β = .134, p = .004, CR > 1.96); and insignificant for gender (β = .-.028, p = .534, CR < 1.96); experience (β = .067, p = .275, CR < 1.96); participants' managerial position (β = .011, p = .804, CR < 1.96); participants' organisational sector (β = -.031, p = .476, CR < 1.96); and participants' functional department (β = .024, p = .585, CR < 1.96).The structural equation model for demographic characteristics and PsyCap is represented in figure 4.1.

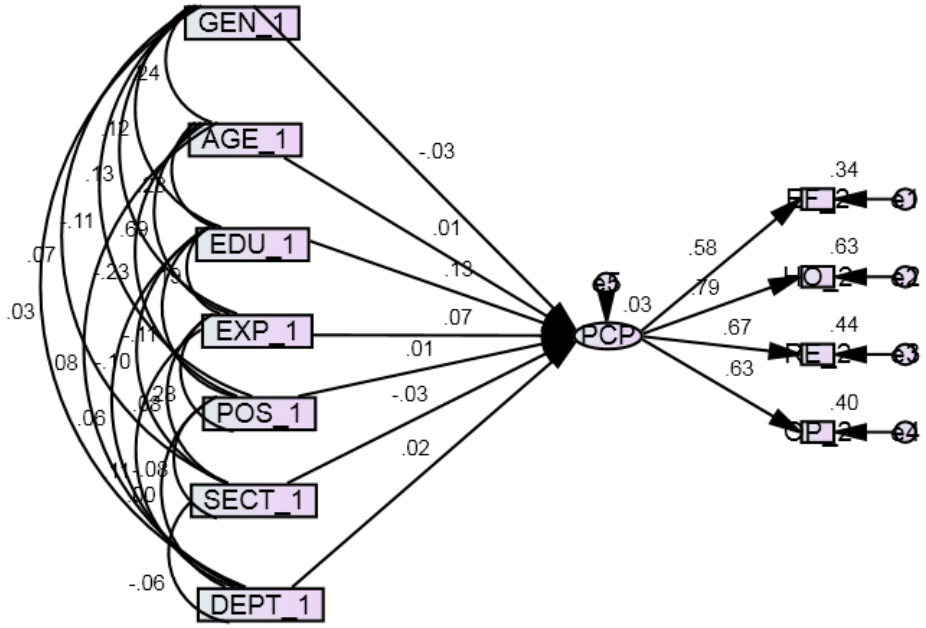

Chi-Square (CMIN) = 45.496
Degree of Freedom (DF) = 24
Probability (p) = .005
Ratio of Chi-Square to Degree of Freedom (CMIN/DF) =1.896
RMR=.044
Goodness of Fit (GFI) = .988
Adjusted Goodness of Fit (AGFI) = .966
Tucker Lewis Index (TLI) = .961
Normed Fit Index (NFI) = .966
Comparative Fit Index (CFI) = .983
Root Mean Square Error of Approximation (RMSEA) = .037

GEN = Gender
AGE = Age
EDU = Education
EXP = Experience
POS= Participant Position
SECT = Participant Public Sector of Employment
DEPT = Participant Functional Department

Figure 4.1 Initial SEM control variables in the model of OEI and PsyCap

The test was rerun after model modification (deleting variables with non-positive significant path coefficients); education remained the only variable with significant path coefficients education (β = .147, p = .000, CR > 1.96); and with a non-significant chi-square test (p =.

227).The final SEM model for demographic factors (with education as the only significant predictor variable of psychological capital) is represented in figure 4.2.

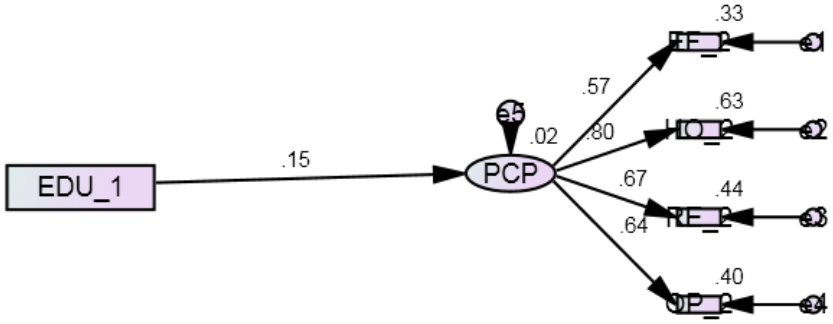

Chi-Square (CMIN) = 6.920
Degree of Freedom (DF) = 227
Probability (p) = .227
Ratio of Chi-Square to Degree of Freedom (CMIN/DF) = 1.384
RMR=.014
Goodness of Fit (GFI) = .996
Adjusted Goodness of Fit (AGFI) = .988
Tucker Lewis Index (TLI) = .994
Normed Fit Index (NFI) = .990
Comparative Fit Index (CFI) = .997
Root Mean Square Error of Approximation (RMSEA) = .024

EDUC_1 = Education

PCP_2 = Psychological Capital
EF_2 = Psychological Capital-Self Efficacy
HO_2 = Psychological Capital-Hope
RE_2 = Psychological Capital-Resilience
OP_2 = Psychological Capital-Optimism

Figure 4.2 Final SEM demographic variables (Education) on PsyCap

Then the relationship between OEI and dimensions of Pryce was examined.

4.5 Overall organisational emotional intelligence and psychological capital dimensions

A SEM was run for overall organisational emotional intelligence (all dimensions of OEI combined) and psychological capital dimensions. Education, the demographic variable which was the significant predictor of psychological capital, was included in the model for further analysis in the model of organisational emotional intelligence and psychological capital dimensions (that is OEI and PsyCap dimensions SEM model), so as to spread its (education) effect in the relationship. The SEM model statistics are reported in table 4.12.

Table 4.12 SEM summary statistics for overall OEI and dimensions of PsyCap

Variable	X^2	DF	X^2/DF	P	NFI	GFI	AGFI	TLI	CFI	RMSEA
(OEI-PsyCap$_d$)	160.30	44	3.6	.000	.955	.962	.932	950	.966	.063

			Estimate	S.E.	C.R.	P	Label
PI_2	<---	OEI	1.000				.782
OR_2	<---	OEI	.983	.040	24.883	***	.871
DI_2	<---	OEI	.496	.040	12.479	***	.484
SL_2	<---	OEI	.964	.044	22.098	***	.801
OC_2	<---	OEI	.985	.042	23.256	***	.829
CS_2	<---	OEI	.750	.046	16.240	***	.616
JH_2	<---	OEI	.874	.040	21.675	***	.784
HO_2	<---	OEI	.476	.038	12.641	***	.490
RE_2	<---	OEI	.387	.040	9.742	***	.384
OP_2	<---	OEI	.374	.039	9.684	***	.383
EF_2	<---	OEI	.404	.041	9.904	***	.391
RE_2	<---	EDU_1	.080	.032	2.490	.013	.090
HO_2	<---	EDU_1	.043	.030	1.459	.145	.050
EF_2	<---	EDU_1	.057	.033	1.717	.086	.062
OP_2	<---	EDU_1	.036	.031	1.146	.252	.041

The structural equation model (SEM) for overall organisational emotional intelligence and psychological capital (OEI-PsyCap) analysis is described in table 4.12. The analysis generated a chi-square of 160.30 at p-value .000 significant, thus suggesting a poor model fit. However,

other fit indices reported were C/MIN/DF =3.6, GFI =.962, AGFI =.932, NFI = .955, CFI = 966, TLI = 956, and RMSEA = .063, indicating an acceptable model fit (Field, 2009). Path analysis reported significant path coefficients for overall organisational emotional intelligence and hope (β = .490; CR > 1.96, p = .000); overall organisational emotional intelligence and resilience (β = .384; CR > 1.96, p = .000), overall organisational emotional intelligence and optimism, (β = .383; CR > 1.96, p = .000), and overall organisational emotional intelligence and efficacy (β = .391; CR > 1.96, p = .000). In line with Field (2009), based on AGFI (>.90) and RMSEA (≤.08), SEM reported an acceptable model fit for overall organisational emotional intelligence and psychological capital dimensions. Thus, hypotheses (*H_{1a-d}): are supported.* The SEM model for Overall OEI and PsyCap dimensions is represented in figure 4.3.

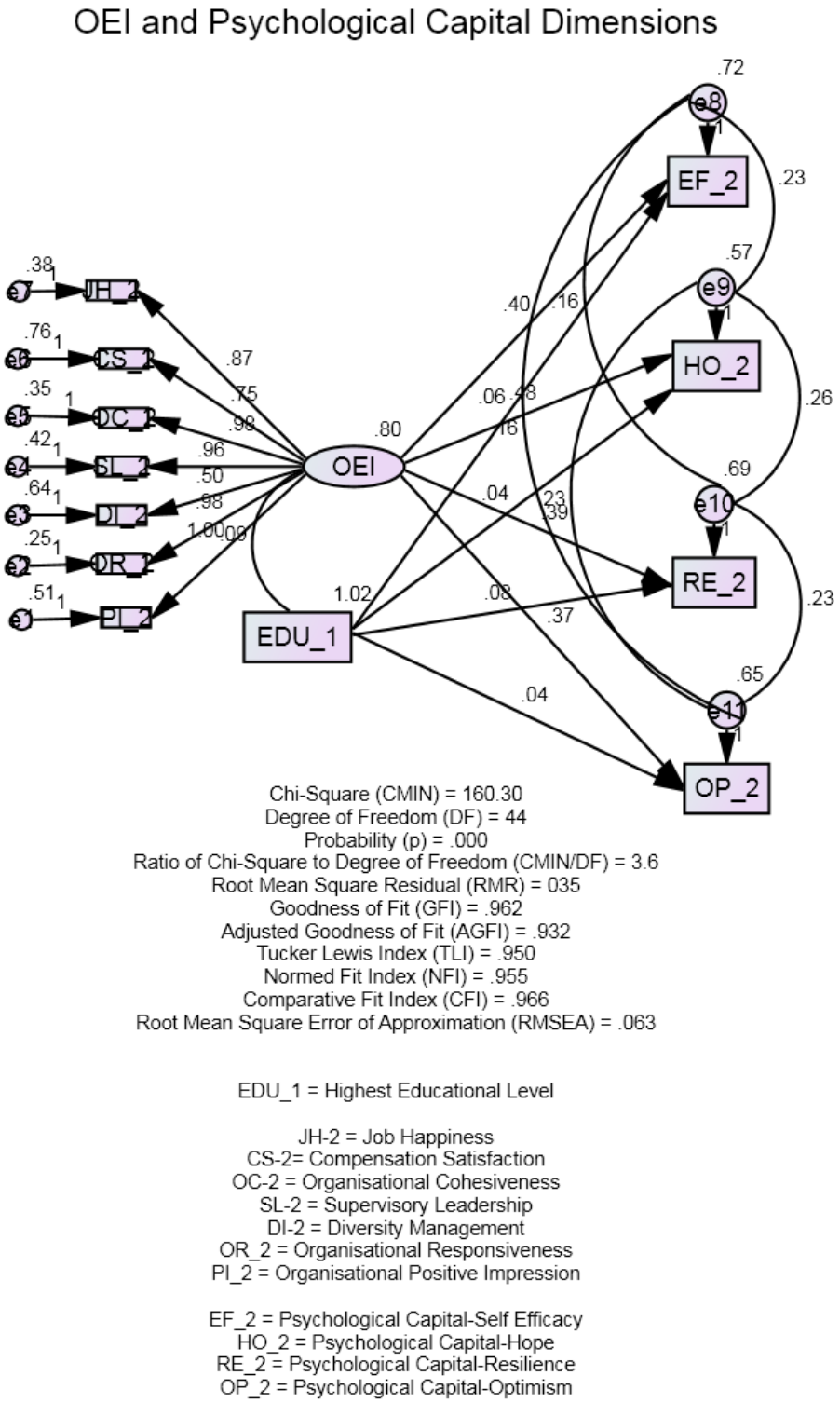

Figure 4.3 OEI and psychological capital dimensions

4.6 Overall organisational emotional intelligence and psychological capital

A SEM was then run for overall organisational emotional intelligence (all dimensions combined) and psychological capital. Education, the demographic variable which was the significant predictor of psychological capital, was included in the model for further analysis in the model of organisational emotional intelligence dimensions and psychological capital, so as to spread its effect in the relationship. The final SEM model statistics are reported in table 4.13.

Table 4.13 Final SEM summary statistics for overall OEI and PsyCap

Variable	X^2	DF	X^2/DF	P	NFI	GFI	AGFI	TLI	CFI	RMSEA
(OEI-PCP)	175.74	53	3.16	.000	.950	.958	.945	956	.965	.059

			Estimate	S.E.	C.R.	P	β
PCP	<---	OEI	.374	.034	11.060	***	.616
PCP	<---	EDU_1	.049	.020	2.413	.016	.090
PI_2	<---	OEI	1.000				.783
OR_2	<---	OEI	.983	.040	24.834	***	.871
DI_2	<---	OEI	.496	.040	12.501	***	.484
SL_2	<---	OEI	.963	.043	22.325	***	.800
OC_2	<---	OEI	.984	.042	23.320	***	.828
CS_2	<---	OEI	.750	.046	16.162	***	.610
JH_2	<---	OEI	.871	.040	21.729	***	.783
EF_2	<---	PCP	1.000				.589
HO_2	<---	PCP	1.267	.093	13.640	***	.795
RE_2	<---	PCP	1.089	.087	12.452	***	.656
OP_2	<---	PCP	1.010	.083	12.108	***	.628

The analysis generated a chi-square of 175.74 at p-value .000 significant, suggesting a poor model fit. However, other fit indices were C/MIN/DF =3.16, GFI =.965, AGFI =.945, NFI = 950, CFI = 965, TLI = 956, and RMSEA = .059, which supported an acceptable model fit (Field, 2009). The path analysis reported significant path coefficients for overall organisational emotional intelligence (β = .616; CR > 1.96, p = .000). In line with Field (2009), based on AGFI (>.90) and RMSEA (≤.08), the SEM showed an acceptable model fit for overall organisational emotional intelligence and psychological capital. Thus, $H_{1e:}$ *is supported.* The SEM model for Overall OEI and PsyCap is represented in figure 4.4.

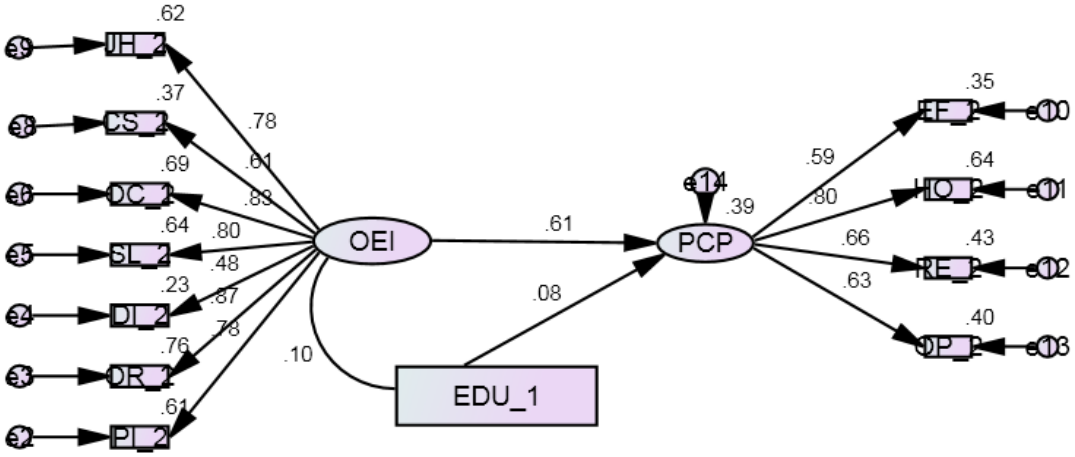

Chi-Square (CMIN) = 169.332
Degree of Freedom (DF) = 53
Probability (p) = .000
Ratio of Chi-Square to Degree of Freedom (CMIN/DF) = 3.256
RMR=.036
Goodness of Fit (GFI) = .959
Adjusted Goodness of Fit (AGFI) = .939
Tucker Lewis Index (TLI) = .957
Normed Fit Index (NFI) = .950
Comparative Fit Index (CFI) = .966
Root Mean Square Error of Approximation (RMSEA) = .058
Average Variance Explained (AVE) = .560
Composite Reliability (CR) = .737

JH = Job Happiness
CS = Compensation Satisfaction
OC = Organisational Cohesiveness
SL =Supervisory Leadership
DI = Diversity and Anger Management
OR = Organisational Responsiveness
PI = Organisational Positive Impression

PCP = Psychological Capital
EF = Self Efficacy
HO =-Hope
RE =Resilience
OP = -Optimism
PCP = Psychological Capital

Figure 4.4 SEM overall OEI and PsyCap

The study further sought to establish what dimensions of organisational emotional intelligence were associated with psychological capital.

4.7 Dimensions of organisational emotional intelligence on psychological capital

Education was established to be a significant predictor of psychological capital; it was thus included in the model of dimensions of organisational emotional intelligence and psychological capital, to spread its effect on the relationship between OEI and PsyCap. The results of the initial model are shown in table 4.14.

Table 4.14 Summary statistics for initial SEM for OEI dimensions and PsyCap

Variable	X^2	DF	X^2/DF	P	NFI	GFI	AGFI	TLI	CFI	RMSEA
(ORE)	45.51	26	1.58	.026	.988	.990	.968	987	.995	.029

			Estimate	S.E.	C.R.	P	B
PCP	<---	WB_2	.029	.023	1.261	.207	.053
PCP	<---	OC_2	.020	.031	.641	.522	.038
PCP	<---	SL_2	.060	.029	2.062	.039	.119
PCP	<---	DI_2	.002	.028	.054	.957	.003
PCP	<---	PI_2	.052	.026	1.960	.050	.109
PCP	<---	JH_2	.173	.032	5.434	***	.317
PCP	<---	CS_2	-.025	.023	-1.080	.280	-.050
PCP	<---	OR_2	.083	.036	2.335	.020	.154
PCP	<---	EDU_1	.027	.020	1.320	.187	.050
EF_2	<---	PCP	1.000				.589
HO_2	<---	PCP	1.267	.091	13.890	***	.795
RE_2	<---	PCP	1.098	.089	12.389	***	.661
OP_2	<---	PCP	1.014	.084	12.101	***	.630

The analysis generated a chi-square of 45.51 at p-value .026; thus suggesting a poor model fit. However, other fit indices reported include C/MIN/DF =1.58, GFI =.988, AGFI =968, NFI = 988, CFI = 995, TLI = 987, and RMSEA = .029, all supporting an acceptable good model fit. Path coefficients represented = job happiness (β = .317, p = .000, CR > 1.96); supervisory leadership (β = .119, p = .05, CR > 1.96); and organisational responsiveness (β = .154, p = .05, CR > 1.96); work–life balance (β = .053, p = NS, CR< 1.96); organisational cohesiveness (β = .038, p = NS, CR < 1.96); diversity and anger management (β = .003, p = .NS, CR < 1.96p=.957); and organisational positive impression (β = .109, p = .050, CR > 1.96).

The test was rerun after model modifications (by deleting variables with insignificant path coefficients); the results are reported in table 4.15.

Table 4.15 Summary statistics for final SEM for OEI dimensions and PsyCap

Variable	X^2	DF	X^2/DF	P	NFI	GFI	AGFI	TLI	CFI	RMSEA
(ORE)	25.53	17	1.50	.083	.989	.992	.978	992	.996	.027

			Estimate	S.E.	C.R.	P	B
PCP	<---	SL_2	.063	.028	2.301	.021	.125
PCP	<---	PI_2	.052	.025	2.040	.041	.108
PCP	<---	JH_2	.180	.031	5.723	***	.328
PCP	<---	OR_2	.078	.034	2.282	.022	.144
PCP	<---	EDU_1	.032	.020	1.556	.120	.059
EF_2	<---	PCP	1.000				.591
HO_2	<---	PCP	1.263	.091	13.914	***	.795
RE_2	<---	PCP	1.090	.088	12.402	***	.659
OP_2	<---	PCP	1.013	.083	12.136	***	.632

Primary Source

The final structural equation model (SEM) for organisational emotional intelligence dimensions and psychological capital (OEI-PCP) produced a better model fit. The analysis generated a chi-

square of 25.53 at p-value .083, thus suggesting a good model fit. In addition, other fit indices reported include C/MIN/DF =1.50, GFI =.989, AGFI =978, NFI = 988, CFI = 996, TLI = 992, and RMSEA = .027; all supporting an acceptable good model fit. The model reported significant and non-significant path coefficients for predictor variables as follows: job happiness (β = .328, p = .000, CR > 1.96); supervisory leadership (β = .123, p = .05, CR > 1.96); organisational responsiveness (β = .144, p = 05, CR > 1.96); organisational positive impression (β = .108, p =. 05, CR > 1.96); education (β = .059, p =. NS, CR < 1.96). In line with Field (2009), Hair et al.(2010) and Eijik and Rose (2015), based on chi-square (not significant at .05), AGFI (>.90) and RMSEA (≤ 0.05), these SEM results reported a good model fit for dimensions of organisational emotional intelligence and psychological capital rated by employees in the public sector in Uganda. The final model for OEI dimensions and PsyCap is now presented below.

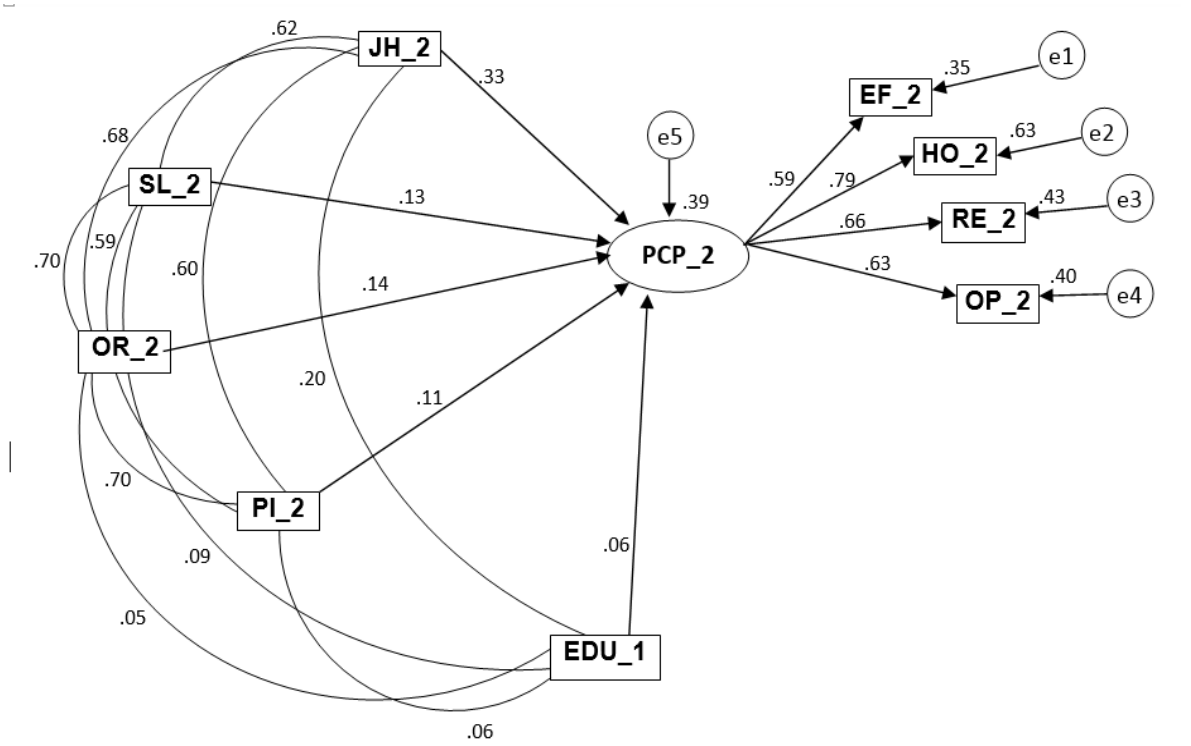

Chi-Square (CMIN) = 25.535
Degree of Freedom (DF) = 17
Probability (p) = .083
Ratio of Chi-Square to Degree of Freedom (CMIN/DF) = 1.502
R
Goodness of Fit (GFI) = .992
Adjusted Goodness of Fit (AGFI) = .978
Tucker Lewis Index (TLI) = .992
Normed Fit Index (NFI) = .989
Comparative Fit Index (CFI) = .996
Root Mean Square Error of Approximation (RMSEA) = .027

EDU_1 = Highest Educational Level

JH-2 = Job Happiness
SL_2 = Supervisory Leadership
OR_2 = Organisational Responsiveness
PI_2 = Organisational Positive Impression

PCP_2 = Psychological Capital
EF_2 = Psychological Capital-Self Efficacy
HO_2 = Psychological Capital-Hope
RE_2 = Psychological Capital-Resilience
OP_2 = Psychological Capital-Optimism

Figure 4.5 Final SEM education, OEI dimensions and PsyCap

4.8 Summary interpretation of study hypotheses

Researchers Van der Eijk and Rose (2015) suggest that a model specified and subsequently estimated can be subjected to a single model chi-square test as an explicit test of the extent to which correlations predicted by the model conform to actual data. A model would be rejected if it is significant at a chosen alpha level (usually .05). In addition, for a model to be acceptable, the results should be as follows: path coefficients should be significant, the critical ratio should be ≥ 1.96, probability levels should be ≤ 0.05; GFI should be ≥ .90 and RMSEA should be ≤ .08(Field, 2009; Hair et al., 2010; Van der Eijk and Rose, 2015). Based on these guidelines, results were interpreted to establish whether the hypotheses were supported or not. Interpretations of the study hypotheses are now presented.

4.8.1 Overall organisational emotional intelligence and psychological capital

H_1: The data was used to analyse whether overall organisational emotional intelligence was significantly and positively associated with psychological capital. Based on SEM results (table 4.14), the tests indicate that overall organisational emotional intelligence is significantly and positively associated with psychological capital (β=.616, p = 000, CR > 1.96). This means that when overall organisational emotional intelligence goes up by a standard deviation of 1, it will create a 0.616 increase in the standard deviation of psychological capital. Thus, hypothesis $H_1$is supported: *that overall organisational emotional intelligence is positively associated with employee psychological capital.*

The study further analysed the association between the separate dimensions of organisational emotional intelligence (OEI) and psychological capital (PsyCap).

4.8.2 Job happiness and psychological capital

H_{2a}: The study data was used to analyse whether job happiness was significantly and positively associated with psychological capital. Based on SEM (table 4.15), results indicate that job happiness is significantly and positively associated with psychological capital (β=.328, CR > 1.96p = 000). This means that when job happiness goes up by 1 standard deviation, it will generate a 0.328 increase in the standard deviation of psychological capital. Thus, **H_{2a}:** *that there is a significant and positive association between job happiness and employee psychological capital* is supported.

4.8.3 Compensation satisfaction and psychological capital

H_{2b}: The study data was used to analyse whether compensation satisfaction was significantly and positively associated with psychological capital. Based on SEM (table 4.15), results indicate that compensation satisfaction is not significantly and positively associated with psychological capital (β=-.055; CR < 1.96; p = 237). This means that compensation satisfaction does not generate significant positive increases in psychological capital. Thus, hypothesis **H_{2b}**: *that there is a positive association between compensation satisfaction and employee psychological capital* is not supported.

4.8.4 Work–life balance and workplace psychological capital

H_{2c}: The study data was used to analyse whether work–life balance was significantly and positively associated with psychological capital. Based on SEM (table4.15), results indicate that work–life balance is not significantly and positively associated with psychological capital (β=.060; CR < 1.96; p = 153). This means that work–life balance does not generate significant positive increases in psychological capital. Thus, hypothesis **H_{2c}**: *that there is a significant and*

positive association between work–life balance and employee psychological capital is not supported.

4.8.5 Organisational cohesiveness and employee psychological capital

H_{2d}: The study data was used to analyse whether organisational cohesiveness was significantly and positively associated with psychological capital. Based on SEM (table 4.15), results indicate that organisational cohesiveness is not significantly and positively associated with psychological capital (β=.041; CR < 1.96; p = 495). This means that organisational cohesiveness did not generate significant positive increases in psychological capital. Thus, hypothesis H_{2d}: *that there is a significant and positive association between organisational cohesiveness and employee psychological capital* is not supported.

4.8.6 Supervisory leadership and psychological capital

H_{2e}: The study data was used to analyse whether supervisory leadership was significantly and positively associated with psychological capital. The results indicate that supervisory leadership is significantly and positively associated with psychological capital (β=.127; CR > 1.96, p = 019).This means that when supervisory leadership goes up by 1 standard deviation, it will generate a 0.127 increase standard deviation in psychological capital. Thus, hypothesis H_{2e}: *that there is a significant and positive association between supervisory leadership and employee psychological capital* is supported.

4.8.7 Diversity management and psychological capital

H_{2f}: The study data was used to analyse whether diversity management was significantly and positively associated with psychological capital. Based on SEM (table 4.15), results indicate that diversity management is not significantly and positively associated with workplace

psychological capital (β= -.003; CR < 1.96; p = 944). This means that diversity management does not generate significant positive increases in psychological capital. Thus, hypothesis H_{2f}: *that there is a significant and positive association between diversity management and employee psychological capital* is not supported.

4.8.8 Organisational responsiveness and psychological capital

H_{2g}: The study data was used to analyse whether organisational responsiveness is significantly and positively associated with psychological capital. Based on SEM (table 4.15), results indicate that organisational responsiveness is significantly and positively associated with psychological capital (β=.134; CR > 1.96, p = .05. This means that when organisational responsiveness goes up by 1 standard deviation, it will generate a 0.134 increase in standard deviation in psychological capital. Thus, **H_{2g}**: *that organisational responsiveness is significantly and positively associated with employee psychological capital* is supported.

4.8.9 Organisational positive impression and workplace psychological capital

H_{2h}: The study set out to establish whether organisational positive impression is significantly and positively associated with psychological capital. Based on SEM (table 4.15), results indicate that organisational positive impression is significantly and positively associated with psychological capital (β=.108; CR > 1.96, p = .05). This means that when organisational positive impression goes up by 1 standard deviation, it will generate a 0.108 increase standard deviation in psychological capital. Thus, **H_{2h}**: *that organisational positive impression is significantly and positively associated with employee psychological capital* is supported.

Here follows a tabulated summary of the relationship between organisational emotional intelligence dimensions and psychological capital, in relation to the hypotheses.

Table 4.16 Summary of findings for tested hypotheses

Objective:	**Hypotheses**	**Hypothesis supported**
1. To investigate whether there is a significant positive association between Stein's overall organisational emotional intelligence (OEI) and employee psychological capital (PsyCap) among public servants in Uganda	**H_1**: There is a significant positive association between overall OEI and employee PsyCap. **H_{1a}**: There is a significant positive association between overall OEI and the self-efficacy dimension of psychological capital (PsyCap). **H_{1b}**: There is a significant positive association between overall OEI and the hope dimension of psychological capital (PsyCap). **H_{1c}**: There is a significant positive association between overall OEI and the optimism dimension of psychological capital (PsyCap). **H_{1d}**: There is a significant positive association between overall OEI and the resilience dimension of psychological capital (PsyCap). **H_{1e}**: There is a significant positive association between overall OEI and psychological capital (PsyCap).	Supported
2. To examine whether there is a significant and positive association between <u>each</u> dimension of Stein's organisational emotional intelligence(OEI) and psychological capital among public servants in Uganda	**H_2**: There is a significant positive association between each dimension of organisational emotional intelligence and psychological capital.	Partially supported
	H_{2a}: There is a significant positive association between job happiness and psychological capital.	Supported
	H_{2b}: There is a significant positive association between compensation satisfaction and psychological capital.	*Not supported*
	H_{2c}: There is a significant positive association between work–life balance and psychological capital.	*Not supported*
	H_{2d}: There is a significant positive association between organisational cohesiveness and psychological capital.	*Not supported*
	H_{2e}: There is a significant positive association between supervisory leadership and psychological capital.	Supported
	H_{2f}: There is a significant positive association between diversity management and psychological capital.	*Not supported*
	H_{2g}: There is a significant positive association between organisational responsiveness and psychological capital.	Supported
	H_{2h}: There is a significant positive association between organisational positive impression and psychological capital.	Supported

Primary Source

4.9 Summary of study findings

The overall objective for this study was to test a model of Stein's (2005) dimensions of organisational emotional intelligence and employee psychological capital. The model specification included eight dimensions of OEI, namely job happiness, compensation satisfaction, work–life balance, organisational responsiveness, supervisory leadership, organisational responsiveness, diversity management and positive impression.

Following SEM guidelines (Field, 2009; Hair et al., 2010; Van der Eijk and Rose, 2015) of chi-square (non-significant at 0.05), GFI (> .90) and RMSEA (< .05), and significant path coefficients (≤ .05), the study established that out of the eight dimensions of OEI, job happiness, supervisory leadership, organisational responsiveness and organisational positive impression met the conditions for a good model fit. They displayed significant path coefficients, which means that they are significantly and positively associated with employee psychological capital. The other four dimensions of OEI (compensation satisfaction, organisational cohesiveness, work–life balance and diversity management), did not fit the model. The diagrammatical representation of the hypothetical and empirical models is presented in figure 4.6.

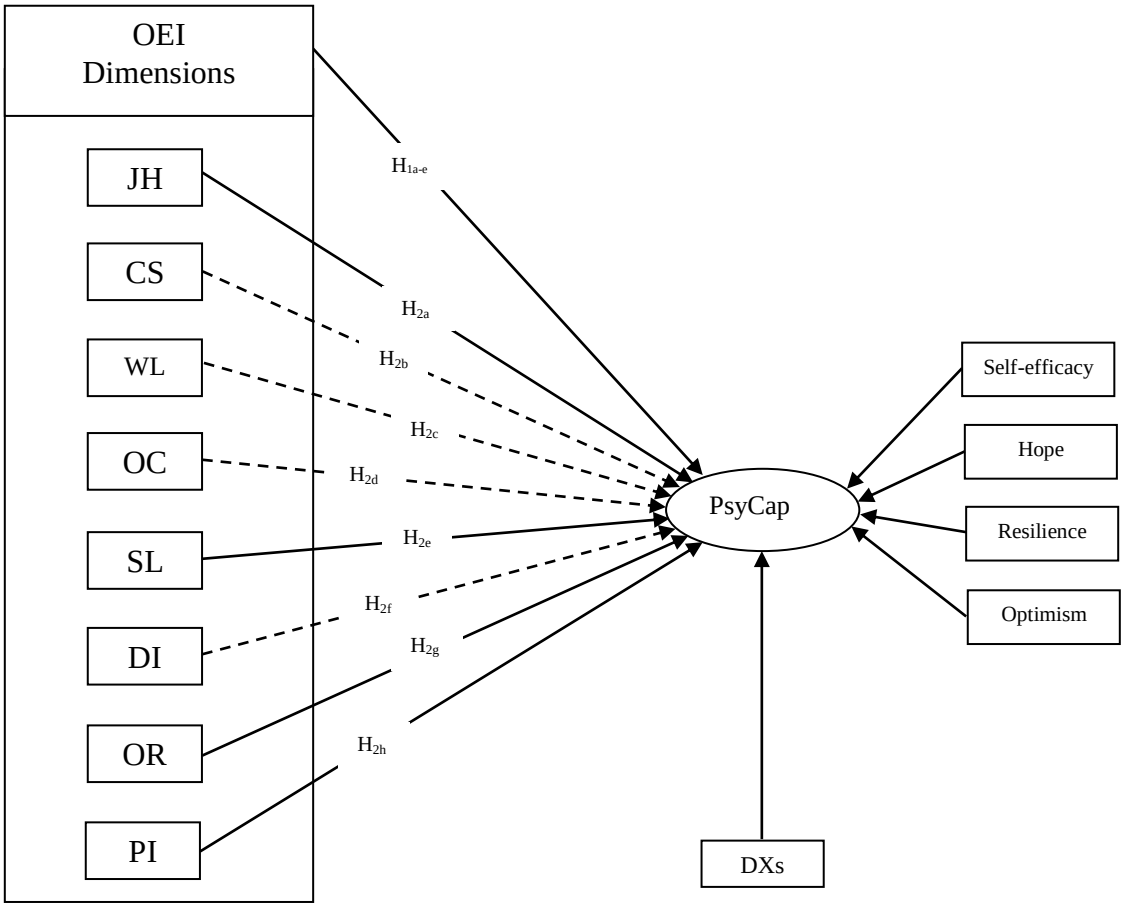

KEY:

Hypothesis Not supported

Hypothesis Supported

JH = Job Happiness
CS = Compensation Satisfaction
WL = Work–life balance
OC = Organisational Cohesiveness
SL = Supervisory Leadership
DI = Diversity Management
OR = Organisational Responsiveness
PI = Positive Impression

PsyCap = Psychological Capital
SE = Self-Efficacy
HO = Hope
RE = Resilience
OP = Optimism
DXs = Demographic factors
H_{1a}-$H_{2h:\ a:}$ *Hypotheses for study*

Figure 4.6 Hypothetical and empirical model of overall OEI, its dimensions and PsyCap

The final model indicates that the job happiness, organisational responsiveness, supervisory leadership and positive impression dimensions of OEI were important significant predictors of employee psychological capital. These findings provide the basis for the discussions, conclusions and recommendations presented in the next chapter, chapter five.

CHAPTER 5: DISCUSSION OF FINDINGS

5.1 Introduction

In the previous chapter, the study findings were presented. In this chapter, the discussion of the findings of the study is presented. The results are discussed with reference to theory and existing literature. The discussion is based on quantitative findings, based on objectives and hypotheses for the study.

In accordance with the study objectives, the chapter is organised into two sections. Section one is on the relationship between overall organisational emotional intelligence and employee psychological capital. The second section examines the different dimensions of organisational emotional intelligence and psychological capital, with subsections on job happiness and psychological capital; compensation satisfaction and psychological capital; work–life balance and psychological capital; supervisory leadership and psychological capital; organisational cohesiveness and psychological capital; organisational responsiveness and psychological capital; diversity management and psychological capital; and positive impression and psychological capital.

5.2 Organisational emotional intelligence and psychological capital

Objective one was to investigate whether there was a significant positive association between overall organisational emotional intelligence and employee psychological capital. In order to investigate this objective, the researcher specified the first hypothesis – that there is a positive significant association between overall organisational emotional intelligence and employee psychological capital. In this study, organisational emotional intelligence was explained by a combination of seven dimensions: job happiness, compensation satisfaction, organisational

cohesiveness, supervisory leadership, organisational responsiveness, diversity management and positive impression; while psychological capital was explained by four dimensions; hope efficacy, resilience and optimism.

Drawing on correlation results (r = 577, p = 000), regression analysis, (R^2 = 30.2, p = 000) and SEM results in this study, these show that organisational emotional intelligence has significant association with psychological capital-self efficacy (β=.390, p = 000, CR > 1.96), psychological capital-hope (β=.490, p = 000, CR > 1.96), psychological capital-resilience (β=.384, p = 000, CR > 1.96), psychological capital-optimism (β=.383, p = 000, CR > 1.96), and higher order psychological capital (β=.620, p = 000, CR > 1.96). The findings provide support to$H_{1:}$ that there is a significant positive association between overall (combination of all dimensions of OEI) organisational emotional intelligence and psychological capital. These findings suggest that changes in organisational emotional intelligence will enhance dimensions of PsyCap (self-efficacy, hope, optimism and resilience plus the higher order psychological capital (a combination of the four individual variables of PsyCap) among public servants in Uganda.

Using the positive organisational behaviour as the foundation for this study, the relationship of organisational emotional intelligence and psychological capital was investigated among public servants in Uganda. The results provide empirical support for the hypothesis that organisational emotional intelligence is positively associated with dimensions of PsyCap and the higher order PsyCap (a combination of the individual variables). Thus, if employees perceive their organisation as emotionally intelligent through job happiness, compensation satisfaction, organisational cohesiveness, effective supervisory leadership, diversity management and organisational responsiveness, and are positively impressed about their organisation, their workplace psychological capital will be enhanced. This means that when organisations introduce

practices and policies that create an organisational positive emotional and social climate, organisations may enhance psychological capital. Thus, if employees feel that their organisations are emotionally intelligent, they will have confidence in their work; will set their goals and targets appropriately; be hopeful in executing their duties that they will succeed (optimism) now and in the future (hope); even when they encounter challenges, setbacks or even opportunities, they will think it is temporary and will bounce back with more energy to succeed with even more energy (resilience). In other words, employees may demonstrate positivity (PsyCap) in their work-life, if they perceive positive organisational emotional intelligence.

This finding is supported by previous research that posits that there is growing evidence that the provision of workplace support facilitates PsyCap development in employees, as it gives them greater hope to seek out new and different pathways to achieve their goals and serve as a resource that allows them to bounce back quickly after a setback (Luthans et al., 2008). These findings conform to earlier studies that assert that organisational climate is a precondition for employee psychological capital (Luthans et al., 2008).

The study further examined the association between each dimension of OEI and PsyCap, that is analysed the predictive potential of each dimension of OEI on PsyCap.

5.3 Dimensions of organisational emotional intelligence and psychological capital

Objective two was to examine the predictive potential of each dimension of organisational intelligence in predicting psychological capital. The researcher specified eight hypotheses which are now discussed, by examining the role of each dimension of organisational emotional intelligence and psychological capital in the public sector in a Ugandan setting. The dimensions of Stein's OEI model considered in the study include job happiness, compensations satisfaction,

supervisory leadership, organisational cohesiveness, diversity management, organisational responsiveness, and organisational positive impression. The relationship between each of these dimensions of OEI and PsyCap is now discussed.

5.3.1 Job happiness and psychological capital

In this study, we set out to investigate whether the job happiness dimension of OEI was associated with employee psychological capital. We stated in the hypothesis (H_{2a}) that the job happiness dimension of OEI was positively associated with PsyCap. The findings reveal a positive and significant association/relationship between job happiness and psychological capital (β=.328, CR > 1.96, p = 000). This provides support for H_{2a} that there is a significant relationship between job happiness and employee psychological capital. This finding seems to indicate that if employees perceive that there are opportunities for career advancement within the organisation, that the supervisor shares information with them, that their jobs gives them a sense of fulfilment and that they can recommend their organisation to others, this will enhance their psychological capital. According to Ritzen (2015), happiness measures are related to a number of factors, including the work that people do, their workload, as well as the income they earn through their work; or the loss of job and the difficulty of finding a job. Thus, being employed makes individuals happier than being not employed (Ritzen, 2015). Further, happiness at work increases productivity (Ritzen, 2015), in this accord, happiness-increasing policies can be associated with productivity through PsyCap.

This finding supports previous studies that happiness at work and in life may be an essential ingredient for employees' psychological capital (Choi and Lee, 2013). Further; this is in agreement with findings by Avey (2014) that job characteristics may be important in predicting psychological capital. In addition, this is supported by a study by Epitropaki (2013) that

demonstrated that high levels of employment uncertainty led to lower levels of PsyCap. Findings in this study thus suggest that organisations may have significant influence on levels of psychological capital by creating policies that create job happiness.

5.3.2 Compensation satisfaction and psychological capital

In this study, we set out to investigate whether the compensation satisfaction dimension of OEI was associated with employee psychological capital. Thus, we stated a hypothesis that the compensation dimension of OEI was positively associated with PsyCap (H_{2b}). The findings reveal that compensation satisfaction is not positively associated with psychological capital (β=-.055; CR < 1.96; p = 237); contrary to what was hypothesised (H_{2b}) that there is a positive association with compensation satisfaction and employee psychological capital. This finding seems to indicate that even when employee pay is consistent with industry standards for their occupation, when they are requested to work extended hours outside regular work hours, they feel adequately rewarded; when the pay provides incentives to those who work hard, the quality of the organisation's benefit package is the reason they stay, the organisation shares its financial success fairly with employees, and the organisation's benefit is adequate for the work they perform; this did not enhance employee psychological capital.

This finding is contrary to the researcher's expectations and previous findings (Casio, 2009) that suggested that enhancing rewards and working conditions to accommodate employee interests enhanced employee resilience a dimension of psychological capital. Further, these findings contradict recent findings by Liu, Chang, Fu, Wand and Wang (2012) who found that female medical practitioners who felt under-rewarded and over-committed had lower levels of PsyCap. Thus, further studies are required to understand why compensation satisfaction is not associated with employee PsyCap, as findings of this study seem to suggest.

5.3.3 Work–life balance and psychological capital

In this study, we set out to investigate whether the work–life balance dimension of OEI was associated with employee psychological capital. We thus hypothesised that the work–life balance dimension of OEI was positively associated with PsyCap (β=.060; CR < 1.96; p = 153), contrary to what was hypothesised (H_{2c}) – that there is a positive association between work–life balance and employee psychological capital. This finding seems to suggest that even when a job: does not create stress that makes it difficult to get the job done; has realistic deadlines to complete the job; has changes making it more difficult to get the job done; has no job demands creating inadequate time for family and friends; has predictable work hours that do not cause significant problems to person or family, this does not enhance psychological capital.

This finding is contrary to previous findings (Bardoel et al., 2014) that proposed that work–life balance may enhance resilience a component of psychological capital. Further, findings contradict recent research that indicated that individuals who face a stressful working environment and high levels of work–family conflict, exhibit lower levels of PsyCap than those who face less stressful working environments (Newman et al., 2014). Yet, Wang et al. (2012) found that PsyCap partially mediated the relationship between work–family conflict and employee burnout. These findings are contrary to what Siu (2013) established that there was a relationship between PsyCap and work–life balance among Chinese employees. This contradictory finding requires further study in understanding the relationship between PsyCap and work life balance. However, the findings conform to what a meta-analysis by Newman et al. (2014) suggests that there are contradicting results on the relationship between work–life balance, stress management and PsyCap. Thus requires more studies to explain why the contradictory findings.

5.3.4 Supervisory leadership and psychological capital

In this study, we set out to investigate whether the supervisory leadership dimension of OEI was associated with employee psychological capital. We thus hypothesised that the supervisory leadership dimension of OEI was positively associated with PsyCap. The findings indicate that supervisory leadership is significantly and positively associated with psychological capital (β=.127; CR > 1.96, p = 019). This provides support for H_{2d} that there is a significant relationship between supervisory leadership and employee psychological capital. This finding seems to indicate that if employees perceive that the supervisor is a good mentor, deals appropriately with employees who are not performing, gives credit where credit is due, provides helpful feedback, is good at maintaining successful working relationships, and the employees have trust in the supervisor's decisions, they will experience enhanced psychological capital.

This finding supports previous studies that recognise the importance of the role of leadership in developing psychological capital (Choi and Lee, 2013). This finding obtained corroborate with previous study findings that leadership is important in explaining PsyCap, including transformational and transactional leadership (Gooty et al., 2009; McMurray et al., 2010); authentic leadership (Walumbwa, et al., 2011; Avey, 2014); ethical leadership and empowering leadership (Avey, 2014); which have been established to influence psychological capital. Similarly, the findings suggest that organisations may have significant influence on employee levels of psychological capital through supervision (Avey, 2014). By investing in leadership development interventions that train leaders in positive leadership practices, including authentic leadership, ethical leadership, empowering leadership behaviours, to enable organisations to acquire highly developed leaders and, in addition, benefit from possible outcomes of high employee psychological capital enhanced by leadership behaviours (Avey, 2014).

5.3.5 Organisational cohesiveness and psychological capital

In this study, we set out to investigate whether the organisational cohesiveness dimension of OEI was associated with employee psychological capital. We thus hypothesised that the organisational cohesiveness dimension of OEI was positively associated with PsyCap. The findings reveal that organisational cohesiveness is not significantly and positively associated with psychological capital (β=.041; CR < 1.96; p = 495), contrary to what was hypothesised in (H_{2e}) – that there is a positive relationship between the organisational cohesiveness dimension of OEI and employee psychological capital. Though surprising, this finding seems to suggest that even when employees feel supported by their co-workers, feel they can trust their co-workers, even when the team works well together as a team, the group has good morale, and the group is highly productive, it could be stated that cohesiveness does not enhance psychological capital.

This finding contravenes previous researchers who posited that caring relationships could be important in enhancing employee resilience; a construct of PsyCap (Bardoel et al., 2014), thus requiring further studies to understand the relationship. The findings are further in conflict with what Bandura (1977) observed that individuals could learn through vicarious modelling by observing others succeed at a task or in a particular area, thus findings require further study in understanding the relationship between organisational cohesiveness and PsyCap.

5.3.6 Diversity management and workplace psychological capital

In this study, the researcher set out to investigate whether the diversity and anger management dimension of OEI was associated with employee psychological capital. She thus hypothesised that the diversity and anger management dimension of OEI is positively associated PsyCap. The findings reveal that diversity and anger management is not significantly and positively associated with psychological capital (β= -.003; CR < 1.96; p = 944), contrary to what was

hypothesised in (H_{2f}) – that there is a positive association/relationship between diversity management and employee psychological capital. This finding seems to suggest that even when employees are fairly treated, regardless of age, race, gender or physical limitation; employees are not harassed or intimidated; when conflicts at work are controlled; with no physical confrontations; yet this level of diversity and conflict management does not seem to enhance employee psychological capital.

This finding is in agreement with what was observed by Avey (2014) that, despite the Age Discrimination Act which prohibits employment based on age or gender. Given that demographic variables (except education) were not predictors of PsyCap; organisations should monitor them; but should not cause a challenge when recruiting for PsyCap for high performance, better attitudes and performance (Avey, 2014).

5.3.7 Organisational responsiveness and psychological capital

In this study, the researcher set out to investigate whether the organisational responsiveness dimension of OEI was associated with employee psychological capital. Thus she hypothesised that the organisational responsiveness dimension of OEI was positively associated with PsyCap (H_{2g}). The findings indicate that organisational responsiveness is significantly and positively associated with psychological capital (β=.134; CR > 1.96, p = .05). This provides support for (H_{2g}) – that there is a significant relationship between organisational responsiveness and employee psychological capital. This finding seems to indicate that if employees perceive that training in their workplace is based on what they really want to get the job done: that the organisation uses knowledge and skills or training that its employees currently have; that the organisational positive atmosphere energises them; that, in attempting to reach goals, the organisation reflects on what they claim to stand for; that the organisations consistently operate

on principles of integrity; that the organisation takes seriously the comments and needs of customers and clients; that the organisation has courage to address its mistakes and confront difficult issues; this level of responsiveness in the organisation contributes to enhanced psychological capital.

This finding supports previous studies that recognise the importance of the role of individual development, including training interventions in psychological capital (Luthans et al., 2010). Luthans et al. (2010) have demonstrated the use of training interventions in management students and managers from several organisations in developing PsyCap. This findings point to a need by organisations to maximise human resource development policies that focus on organisational responsiveness, which may increase individual psychological capital.

5.3.8 Positive impression and psychological capital

In this study, the researcher set out to investigate whether the positive impression dimension of OEI was associated with employee psychological capital. The findings indicate that a positive impression is significantly and positively associated with psychological capital (β=.108; CR > 1.96, p = .05). This provides support for H_{2h} – that there is a significant relationship between positive impression and employee psychological capital. This finding suggests that if employees perceive that they do not have problems with their workplace, that they can be completely honest with their supervisor, that their organisation functions perfectly, and that they are proud to work in their organisation, this positive impression about the organisation may enhance psychological capital.

This finding supports previous studies that recognise the importance of perceived positive impressions in influencing psychological capital (Kimberley and Scott-Halsell, 2012). The

finding suggests that by creating a positive impression, policies can also increase employee PsyCap.

5.4 Conclusion

The main objective of this study was to investigate the association (if any) between organisational emotional intelligence (OEI) and psychological capital (PsyCap); and the predictive potential of each dimension of OEI in influencing PsyCap. The study found a positive association between overall organisational emotional intelligence and employee psychological capital. In terms of the association between each dimension of OEI and PsyCap; the study found that, in order of importance: job happiness, organisational responsiveness, supervisory leadership and positive impression are important predictors of in influencing psychological capital. However, the study did not find a significant association between compensation satisfaction, work–life balance, organisational cohesiveness, diversity management and psychological capital, suggesting that these dimensions of OEI may not influence employee psychological capital among public servants.

Based on the study discussions, the next chapter, chapter six, presents conclusions, implications and recommendations for this study.

CHAPTER 6: CONCLUSIONS, IMPLICATIONS AND RECOMMENDATIONS

6.1 Introduction

In chapter five, the findings of the study were discussed in relation to theory and existing literature. In this chapter, the conclusions that were drawn from the findings are presented, with theoretical, policy and managerial implications.

6.2 Conclusions

The researcher examined the association between positive organisational emotional intelligence (OEI) and employee psychological capital (PsyCap). The study established that OEI is positively related to employee PsyCap among public servants in Uganda; further, that some dimensions of OEI are positively related with employee PsyCap, while other dimensions of OEI are not significantly related to PsyCap.

6.2.1 Organisational emotional intelligence and psychological capital

In objective one, the researcher examined the association between organisational emotional intelligence, as a combination of all its dimensions, and employee PsyCap. It can be concluded from the study findings and discussion that, when public sector organisations make changes in policies to cope with change and accomplish goals effectively while maintaining responsibility and sensitivity to its stakeholders (employees, customers, suppliers, networks and society), such policies could be associated with changes in psychological capital. The study findings suggest that public service organisations can rely on changing the emotional and social climate consisting of job happiness, compensation satisfaction, organisational cohesiveness, work–life balance, supervisory leadership, diversity management, organisational responsiveness and

positive impression of their organisations to increase dimensions of PsyCap consisting of self-efficacy, hope, optimism and resilience, and PsyCap. In line with previous literature, positive organisational climate has been established to lead the employee to believe that they are working in an organisation which will foster hard work and acknowledge that accordingly, which in turn leads them to hope for a better future, to be optimistic about rewards, to be resilient to turnover and to increase self-efficacy; together this will enhance PsyCap (Luthans et al., 2008, Sulfain, 2015).

6.2.2 The separate dimensions of OEI and PsyCap

In objective two, the researcher examined the association between the separate dimensions of organisational emotional intelligence and employee psychological intelligence with a view to establishing the relative importance (predictive power) of each dimension of OEI on PsyCap. From the findings and discussion, it can be concluded that some dimensions may increase PsyCap while others may not. This implies that public organisations may rely on some dimensions of OEI to increase PsyCap; however, further studies would be required to understand whether this applies to the other dimensions. In the order of relative importance or predictive power, job happiness, organisational responsiveness, supervisory leadership and positive impression are the dimensions of OEI that may enhance employee PsyCap. The other dimensions, namely, compensation satisfaction, work-life and stress management, organisational cohesiveness and diversity management may not enhance employee PsyCap. This finding was unexpected. It would require additional studies to understand whether these dimensions of OEI require moderators or mediators to enhance PsyCap (Newman et al, 2014).

In summary therefore, public organisations can rely on creating human resource policy interventions that increase job happiness, organisational responsiveness, supervisory leadership

effectiveness and positive impression, to increase psychological capital for increased morale and productivity in the workplace (Marilyn, 2009, Ritzen, 2015).

6.3 Study Contribution/Implications

This study makes the following theoretical, empirical and methodological contributions.

6.3.1 Theoretical implication

The researcher draws theoretical implications according to on whether or not the findings support the system of belief (tenets) of existing theory, and whether or not the findings have filled a theoretical gap. This study makes a significant contribution to the field of knowledge by offering contributions towards a theoretical position. The study has tested a structural equation model of organisational emotional intelligence dimensions and employee PsyCap. The study thus made a contribution by evaluating the emerging theory of organisational emotional intelligence and psychological capital theory.

The resource-based view of a firm has proved an extremely popular theoretical foundation for many studies seeking to explain the sources of competitive advantage for organisations, as evidenced by the positive relationships between strategic resources that are valuable, rare, and not easy to duplicate, and organisational performance (Crook et al., 2011). However, some studies suggest that the role of human capital factors may be overestimated (Bozek, 2015), and for human capital to generate superior returns for the organization, organisation members must be motivated first to develop valuable routines and their capabilities (Newman et al, 2014). Other than social capital, one other form of strategic resource that has gained the attention of academicians and researchers in influencing individual and organisational performance is

psychological capital (Avey et al., 2011). However, few models have demonstrated how it can be developed.

This study was based on positive behaviour theory and tested a model of organisational emotional theory (OEI) and positive psychological capital (PsyCap). By establishing a model fit between organisational emotional intelligence and positive psychological capital, this study makes a contribution towards explaining psychological capital. The emerging concept of organisational emotional intelligence is established as an important antecedent of positive psychological capital, thus addressing an identified a gap in knowledge on the antecedents of positive PsyCap (Newman et al, 2014).

Some evidence has started to emerge at the individual level of analysis among University students that Pryce could be a form of EI (Eylem and Hakki, 2016). Earlier, Mellao and Monico (2013) provided evidence that there is a significant relationship between emotional intelligence and the psychological capital of workers. Further, a study by Malik and Masood (2015) has confirmed that high levels of emotional intelligence may be associated with high levels of psychological capital among high school teachers. This study supports the association between EI and PsyCap theory among a large sample of public servant employees.

However, the particular contribution of this study is the organisational level of positive emotional intelligence using Stein's (2005) model on employee PsyCap. Through correlations, regression and SEM analysis; the study has established that some dimensions of organisational emotional intelligence are significantly related to PsyCap in employees in the public service in Uganda.

6.3.2 Empirical contribution

Luthans (2002) and his colleagues developed the construct of psychological capital to capture how an individual's psychological capabilities can be measured, developed and harnessed for performance improvement (Luthans & Youssef, 2004). Using a number of criteria, they identified four main psychological resources from the positive psychology literature that form the higher order PsyCap: self-efficacy, hope, optimism, and resilience (Luthans & Youssef, 2004). Over the years a number of studies have investigated the relationship between PsyCap and employee attitudes, behaviour and performance (Avey et al, 2011, Newman et al., 2014). Although there is emerging literature on determinants of PsyCap, this area is still under-researched (Newman et al, 2014; Avey, 2014; Kalla, 2015).

This study thus set out to improve knowledge on the OEI determinants of PsyCap. The study provides empirical evidence that job happiness, supervisory leadership, organisational responsiveness and positive impression are important predictors of PsyCap. These findings should help organisations develop programmes to boast individual PsyCap through design of workplace systems such as support mechanisms and leadership initiatives (Newman, et al, 2014).

These findings have made a contribution to literature as none of the organisational emotional intelligence factors have been explored before as antecedents of PsyCap in a single model, to examine the relative importance of each dimension. Moreover, the relationship between individual dimensions of OEI and psychological capital were examined. Other studies have established a relationship between leadership and PsyCap (Gooty et al., 2009; Woolley, Caza, and Levy, 2010; Avey, 2014, Rego et al., 2015) but no study had tested leadership and PsyCap with job happiness, organisational responsiveness and positive impression. This study suggests

that in a positive emotional and social climate of OEI, job happiness is the most important predict of PsyCap. Organisations can focus on happiness-maximising policies to enhance PsyCap if resources are inadequate to adopt a full model of significant OEI dimensions.

In addition, the study makes a particular contribution in the context of the Ugandan public sector, which has been criticised to have low morale and productivity. PsyCap has been established to lead to employee morale and productivity (Marilyn, 2009, Ritzen, 2015). Furthermore, in the context of a dearth of studies on organisational emotional intelligence (Hamlina, Nassarb and Wahbaet al., 2010, Ghuman, 2011), this study provides original empirical evidence on the association between OEI and PsyCap in public sector organisations.

Finally, the most significant contribution made by this study is to provide empirical evidence for the relationship between organisational emotional intelligence and social climate on the one hand and PsyCap on the other. To the best of my knowledge this relationship had never been explored before and therefore this research makes a significant contribution to knowledge. By collecting data from 668 employees from various public sector organisations in Uganda, the researcher provides empirical evidence to support the cross-level influence of organisational emotional intelligence dimensions that may positively increase employee PsyCap according to Newman et al (2014) meta-analysis.

Thus the study fills a gap in previous studies that have emphasised important outcomes of PsyCap, without considering what determines PsyCap (Avey, 2014, Kalla, 2015). The results make a contribution on OEI factors which could lead to the development of employee PsyCap in organisations. The contribution of the study is represented in the final model namely that job happiness, organisational responsiveness, supervisory leadership and positive impression

dimensions of OEI, in that order, are important predictors of psychological capital. Organisations could rely on these dimensions of OEI to enhance psychological capital.

The empirical contribution is represented in the SEM 6.1:

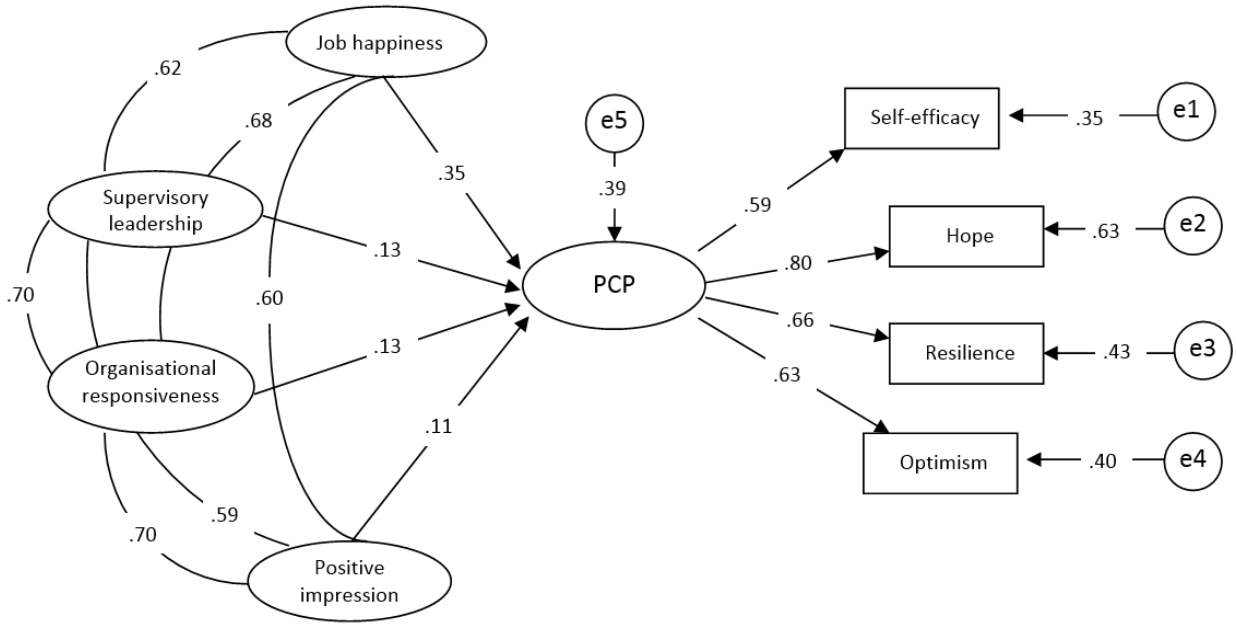

Figure 6.1 Final SEM OEI dimensions and PsyCap

6.3.3 Methodological contribution

The study used a structural equation model to confirm the influence of organisational emotional intelligence on employee PsyCap and establish an acceptable model fit between organisational emotional intelligence and employee PsyCap. The study also contributes to the construct reliability of the psychometric scales of Stein's (2005) organisational emotional intelligence scale (Luthans et al., 2007) and the PsyCap scale in the public sector in Uganda.

Further the study collected data on study variables at different times, as recommended by Podsakoff, MacKenzie, Lee and Podsakoff (2003). According to Newman et al.'s (2014) meta-analysis, although researchers are aware of the need to limit common methods variance between

dependent and independent variables by collecting data at different times in time or from different sources (Podsakoff, MacKenzie, and Podsakoff, 2003), limited effort has been made to do this. This study makes a contribution to data collection methods on PsyCap and its determinants by collecting the data on the dependent variable a month after collecting data on PsyCap and other demographics.

6.3.4 Managerial implications

In terms of contribution to practice, the researcher suggests effective strategies that organisations can employ to influence employee PsyCap for productivity. The organisations can influence employee PsyCap through human resource practices that enhance positive OEI for job happiness, encourage organisational responsiveness, and train supervisors in effective supervisory leadership and foster positive impression. Managers can encourage job happiness, organisational responsiveness, supervisory leadership and positive impression dimensions of OEI to enhance PsyCap. The other dimensions of OEI compensation – satisfaction, organisational cohesiveness, diversity management and work–life balance require further investigation to understand their influence on PsyCap.

This study provides practical suggestions to organisations to manage employee PsyCap via a policy that places more effort on managing the organisational emotional climate. They can help to create PsyCap among employees, furthering employee PsyCap for organisational competitiveness and employee productivity.

6.3.4: Practical implications

Job happiness (JH) can be applied creating policies that create opportunities for career advancement for employees within the organizations, by sharing information with employees, by creating a sense of fulfilment in public service jobs that would enable employees to enthusiastically recommend their organizations, products or services to others with enhanced PsyCap.

Further the public service supervisory leaders (SL) should perform their roles effectively as good mentors/coaches; mediating conflicts or disagreements at work; dealing appropriately with employees who are not performing; giving credit where it is due; providing helpful feedback to employees, maintaining successfully working relationships; and creating trust for their decisions among subordinates to enhance PsyCap.

In addition, organizations should be responsive (OR) by providing training and innovation (TI) opportunities that is required for the job, using the knowledge, skills, or training that employees currently have acquired; enhancing optimistic integrity (OI) through creating positive atmosphere that energises employees, take actions that reflect what they organization stands for, continuously operating on the principle of integrity, taking seriously the comments and needs of customers/clients; and courageous adaptability (CA) through having courage to address its mistakes and confront difficult issues, striving for excellence, being flexible and responding to change.

Further, organisations should design organisational impression policies that create no problems for employees, create honest relationships between employees and supervisors, ensure

organisations operate perfectly and make employees proud to enhance PsyCap among employees.

6.4 Limitations

Some characteristics of this study may create potential limitations. One of the potential limitations concerns the nature of this cross-sectional research. Although a fairly large sample was used, the cross-sectional research design nature of the study does not allow causal inferences to confirm that organisational emotional intelligence and its dimensions cause PsyCap. In addition, the study depends on existing theory based on the foundations of positive organisational behaviour (POB) and previous literature to conceptualise the phenomenon for this study. The study findings indicate that the predicted relationship between organisational emotional intelligence and some of its dimensions, and PsyCap exists. However, the direction of the causality can only be determined with greater interpretive capacity in a longitudinal or experimental manipulative study. Thus, the causality direction cannot confidently be confirmed in this study. The possibility of an alternative hypothesis that high PsyCap leads to organisational emotional intelligence or its dimensions cannot be ruled out (Sui, 2008; Liu, Wang and Zhao, 2015).

Further, the study findings and conclusions are based on a sample of employees from public service organisations of a developing economy, Uganda. The findings may not be fully representative of all developing countries' public service psychological capital OEI predictors. To be replicated in other developing economies requires further study, in order to generalise the research findings in other contexts.

Other limitations that may have implications for this study and require further research include the measurement used of organisational emotional intelligence and PsyCap. Some scholars continue to question the unique predictive value of emotional intelligence, the use of cross-sectional research designs to imply causal relationships, and the concept of definitional and psychometric instability (Cherniss, 2010). Despite the criticism on conceptualisation, definition and measurement, EI intelligence continues to attract researchers and academia (Nafukho, 2015). Whereas Stein (2005) argues that dimensions of OEI have been defined as precisely as possible using existing measurements of what constitutes organisational and emotional aspects of employees at work, and the validity has been thought out and extensively developed using a large sample of participants, the field has attracted few researchers (Pomraning, 2010). Though minimum reliability and validity requirements were met in this study, further studies are required to validate it in different organisational contexts. In addition, other emerging conceptualisations of organisational emotional intelligence have been proposed (Menger and Bruch, 2009; Chung-Liu and Chen, 2012; Giorgi, 2013). Further studies could use these other conceptualisations of organisational emotional intelligence if they can attain a shared perception for aggregation. Longitudinal studies rather than cross-sectional studies are required to provide further insights into the causality between OEI and PsyCap.

This study may also be limited by common method variance within, as well as between, the independent variable and dependent variable, which may lead to high correlations. Data on organisational emotional intelligence was collected from the same respondents who were willing to continue with the study, so the common method bias limitation cannot be completely ruled out. However, to reduce common methods bias, data was collected at different points in time (Newman et al, 2014).

Despite these possible limitations to this study, he research provides preliminary results on the association between OEI dimensions and the PsyCap of public sector employees in a developing economy such as Uganda. It is hoped that other researchers will use the research generatively when considering possibilities for future research between emotional intelligence and psychological capital theory, and thus the following recommendations are now made.

6.5 Recommendations

In continuing this debate on the determinants of PsyCap, researchers could undertake further studies on the following:

1. Researchers interested in PsyCap could undertake longitudinal studies to observe whether increases in organisational emotional intelligence may trigger increases in PsyCap over a period of time.
2. There are limited studies into organisational emotional intelligence and psychological capital in the public sector. More studies will enhance the understanding and unconcluded debate in the area of emotional intelligence and psychological capital theory.
3. Researchers can further consider some mediating factors that could enhance the relationship between organisational emotional intelligence and PsyCap.
4. Qualitative studies are also necessary to understand why some dimensions of organisational emotional intelligence influence PsyCap and others do not.
5. A qualitative study could also include the historical and cultural dimensions of a given environment on the outcome of PsyCap.
6. Further research would benefit from a mixed methods research design. This would provide a more complete picture by drawing from attributes of both qualitative and

quantitative methods. Such a study would enable a greater understanding to be derived from deeper interpretation and analysis of the relative importance of individual and organisational predictors of PsyCap after a meta-analysis of the available literature on the determinants of PsyCap.

7. Further research could also use other emerging conceptualisations and measurements of organisational emotional intelligence, as opposed to Stein's model used by this study.

REFERENCES

Abbas, M., Raja, U., Darr, W., & Bouckenooghe, D. (2012). Combined effect on perceived politics and psychological capital on job satisfaction, turnover intentions, and performance. *Journal of Management*, 1–19.

Adu-Febiri, F. (2006). The destiny of cultural diversity in globalised world, review of human factor studies. *International Institute of the Human Factor Development,* 12(1), 31–64.

Afzaal, H. S., & Afzaal, T. (2013). An investigation of the relationship among emotional intelligence, organisational commitment, and job satisfaction: Evidence form academic in Brunei Darussalam. *International Business Research,* 6(3), 217–229.

Aguinis, H., Gottfredson R. K., & Joo, H. (2013). Best-practice recommendations for defining, identifying and handling outliers. *Organisational Research Methods,* 16, 270–301.

Ahianzu, A. I. (2011). *Advanced social research methods* [Lecture Notes]. Retrieved from CIMRAT, River State University of Science and Technology, Port Harcourt, Nigeria.

Antonakis, J., Ashkanasy, N., & Dasbourough, M. (2009). Does leadership need emotional intelligence? *The Leadership Quarterly*, 20, 247–261.

Antony, J. M. (2013). The influence of emotional intelligence on organisational commitment and organisational citizenship behaviour. *International Journal of Social Science and Interdisciplinary Research,* 2(3), 110–107.

The Government of Uganda: Auditor General Report to Parliament of Uganda, (2013)

Avey, J. B. (2014). The left side of psychological capital: New evidence on antecedents of PsyCap. *Journal of Leadership and Organisational Studies*, 21(2), 141–149.

Avey, J.B., Luthans, F., & Jensen, S.M. (2009). Psychological capital: A positive resource for combating employee stress and turnover. *Human Resource Management,* 48, 677–693.

Avey, J.B., Luthans, F., Smith, R. M., & Palmer, N. (2010a). Impact of positive psychological capital on employee wellbeing overtime. *Journal of Occupational Health Psychology,* 15(1), 17–28.

Avey, J.B., Luthans, F., & Youssef, C.M. (2010b). The additive value of positive psychological capital in predicting work attitudes and behaviours. *Journal of Management,* 36(2), 430–452.

Avey, J.B., Nimnicht, J. L., & Pigion, N.G. (2010c). Two field studies, examining the association between positive psychological capital and employee performance. *Journal of Leadership and Organisational Studies*, 15(1), 17–28.

Avey, J. B., Patera, J. L., & West, B. J. (2006). The implications of positive psychological capital on employee absenteeism. *Journal of Leadership and Organizational Studies,* 13, 42–60.

Avey, J.B., Reichard, R., Luthans, F., & Mhatre, K. (2011). Meta-analysis of the impact of psychological capital on employee attitudes, behaviours and performance. *Human Resource Development Quarterly,* 22(2), 127–152.

Bandura, A. (1977). Self-efficacy: Towards a unifying theory of behaviour change. *Psychological Review*, 84,191–215.

Bardoel, E. A., Pettit, T. M., Cieri, H., & McMillan, L. (2014). Employee resilience: An emerging challenge for human resource management. *Asia Pacific Journal of Human Resources,* 1–19.

Barney, J. B., Ketchen, D. J. Jr., & Wright, M.(2011). The future of resource-based theory revitalization or decline? *Journal of Management,* 35(5), 1299–1315.

Bar-On, R. (1997). *EQi Bar-On emotional intelligence quotient inventory: A measure of emotional intelligence.* Technical Manual, Multi-Health Systems. Canada: Toronto.

Bar-On, R. (2003). *The emotional intelligence inventory*. Technical Manual, Multi-Health Systems. Canada: Toronto

Bar-On, R. (2006). The Bar-On model of emotional social intelligence, (ESI). *Psicothema,* 18, 13–25

Baron, R. M., &Kenny, D. A. (1986). The moderator-mediator variable distinction in social psychological research: Conceptual, strategic, and statistical considerations.*Journal of Personality and Social Psychology,* 51(6), 1173–1182.

Bartz, A. E. (1999). Basic Statistical Concepts (Fourth ed.). Upper Saddle, NJ: Prentice Hall.

Berman, E.M., & West, J**.** P. (2008). Managing emotional intelligence in US cities: A study of social skills among public managers. *Public Administration Review,* 68(4), 742–758.

Bonnett, D. G., & Wright, T. A. (2014). Cronbach's alpha reliability: Internal estimation, hypothesis testing, and sample size planning. *Journal of Organisational Behaviour,* 36, 3–15.

Bosek, A. (2015). Positive psychological capital concept: A critical analysis in the context of participatory management, *Management and Administration, Central Europe,* 23(3), 19–31.

Boyatzis, R. E. (1982). The Competent Manager, a Model for Effective Performance. New York: John Wiley and Sons.

Boyatzis, R. E. (2006). Using tipping points of emotional intelligence and cognitive competencies to predict financial performance of leaders.*Psicothema*, 18, 124–131.

Boyatzis, R. E. (2009). Competencies as a behavioral approach to emotional intelligence.*Journal of Management Developmen*t, 28, 749–770.

Boyatzis, R. E. & Goleman,D. (2006). Using tippine points of emotional intelligence and cognitive competences to predict financial performance, *Psicothema,* 18, 124131.

Campbell, D. P., & Hyne, D. L. (1995). Manual, Campbell Interest and Skills Survey. Minneapolis, Minnesota: National Computer Systems.

Cetin, F. (2011). The effect of organisational capital on the attitudes of commitment and satisfaction: On public sample in Turkey. *European Journal of Social Sciences,* 21, 373–380.

Cherniss, C. (2010). Emotional Intelligence: Toward clarification of a concept.*Industrial and Organisational Psychology*, 3, 110–126

Choi, Y., & Lee, D. (2013). Psychological capital, "big five" traits and employee outcomes. *Journal of Managerial Psychology*,29, 122–140.

Chung-Liu, L., & Chen, J. C. H. (2012). Developing and prioritizing measures of emotional capital in public service organisations.*International Journal of Information Systems in the Service Sector*, 4(3), 52–60.

Clapp-Smith, R., Vogelgesang, R., & Avey, J. B. (2009). Authentic leadership and positive psychological capital: The mediating role of trust at the group level of analysis. *Journal of Leadership & Organisational Behaviour*, 15(3), 227–240.

Collins, J.,& Hussey, R. (2009). *Business Research. A Practical Guide for Undergraduate and Postgraduate Students.*Palgrave Macmillan.

Crook, T. R., Todd, S. Y., Combs, J. G., Woehr, D. J., & Ketchen, D. J. Jr., (2011). Does human capital matter? A meta-analysis of the relationship between human capital and firm performance.*Journal of Applied Psychology*, 96, 443–456.

David, S., Boniwell, I., & Ayers, A. C. (Eds.) (2012). *Oxford Handbook of Happiness*(First ed.). Oxford: Oxford University Press.

Dawkins, S., Martin, A., Scott, J., & Sanderson, K. (2013). Building on the positives: A psychometric review and critical analysis of the construct of Psychological Capital.*Journal of Occupational and Organisational Psychology*, 86, 348–370

Devlon, A. D. (2006). *Research Methods: Planning Conducting and Presenting Research.* Belmont CA: Wadsworth/Thomson Learning Press.

Donaldson, S. I., & Ko, L. (2010). Positive organizational behavior and scholarship: A review of the emerging literature and evidence base, dedicated to furthering research and promoting good practice. *The Journal of Positive Behaviour,* 5(3), 177–191.

Druskat, V. U., & Wolff, S. B. (2001). Building emotional intelligence of groups. *Harvard Business Review*, 79(3), 81–90.

Du Plessis, Y., & Barkhuizen, N. (2011). Psychological capital: A requisite for organisational performance in South Africa. *South African Journal of Economics and Management Sciences,* 15(1), 16–31.

Elliott, A. C., & Woodward, W. A. (2007). *Statistical Analysis Quick References Guidebook: With SPSS Examples.*(First ed.). London: Sage Publications.

Epitropaki, O. (2013, 9-13 August). *Employment Uncertainty and the Role of Authentic Leadership and Positive Psychological Capital.* Paper presented at the Academy of Management Conference, Orlando, Florida, USA.

Eylem & Hakki. Is psychological capital a form of emotional intelligence? A research on University students. *International Conference on Contemporary Issues in Education*, 27 -29 May 2016, Zagreb - Croatia

Field, A. (2009). *Discovering Statistics, Using SPSS.* (Third ed.). Thousand Oaks, CA: Sage.

Fornell, C., & Larcker, D. G. (1981).Evaluating structural models with unobservable variables and measurement error.*Journal of Marketing Research*, 18, 39–50.

Gardener, H. (1983). Frames of Mind. New York: Basic Books Inc.

Ghasemi, A., & Zahediasl, S. (2012). Normality tests for statistical analysis: A guide for non-statisticians. *International Journal of Endocrinology Metabolism*, 10 (2), 486–489.

Gholami, S., Keykale, M., Tir, M., Ramandi, F., Karimi, M., & Rajaee, R. (2015). Investigating the relationship between organisational climate and organisational citizenship behavior among staff in hospital. *European Journal of Biology and Medical Science Research,* 3(3), 54–63.

Ghuman, U. (2011). *Understanding group emotional intelligence in the public sector,* Unpublished Dissertation, Florida Atlantic University, USA.

Giorgi, G. (2013). Organisational emotional intelligence: Development of a model. *International Journal of Organisational Analysis*, 21(1), 4–18.

Gist, M. E. (1987). Self-efficacy: Implications for organisational behavior and human resource management. *Academy of Management Review*, 12(3), 472–485.

Global Competitiveness Report (2014–2015).

Glynn, M. A., & Dowd, T. J. (2008). Charisma (Un) bound: Emotive leadership in Martha Stewart Living Magazine, 1990–2004. *The Journal of Applied Behavioral Science*, 44, 71–93.

Goleman, D. (1998). *Working with Emotional Intelligence.* New York: Bantam

Goleman, D. (2006). *Social Intelligence*. New York: Bantam.

Golparvar, M., & Abedini, H. (2014). A comprehensive study of the relationship between meaning and spirituality at work with job happiness, positive affect and job satisfaction. *Management Science Letter*, 4, 255–268.

Gooty, J., Gavin, M., Johnson, P. D., Frazier, M. L., & Snow, D. B. (2009).In the eyes of the beholder: Transformational leadership, positive psychological capital, and performance. *Journal of Leadership and Organizational Studies*, 15, 353–367.

Gunavathy, J. C., & Ayswarya, R. (2010). Emotional intelligence and job satisfaction as correlates of job performance, a study among women employed in the Indian software industry. *Paradigm Journal*, 15(1&2), 58–65.

Hair, J. H., Jr., Black, W. C., Babin, B. J., & Anderson, R. E. (2010).*Multivariate Data Analysis* (Seventh ed.). Upper Saddle River, NJ: Prentice Hall.

Hambrick, D. C., & Mason, P.A. (1984). Upper echelons: The organisation as a reflection of its top managers. *Academy of Management Review*, 9(2), 193–206.

Hamlina, R. G., Nassarb, M., & Wahba, K. (2010). Behavioural criteria of managerial effectiveness within Egyptian and British public sector hospitals: An empirical case cross-nation comparative analysis. *Human Resource Development*, 29(3), 265–281.

Hamme, C. (2003). *Group emotional intelligence, the research and development of an assessment instrument.* Unpublished Dissertation, Rutgers State University of New Jersey, Piscataway, NJ.

Hammend, A., & Torubelli, V. (2011). Emotional intelligence and human relationship management as predictors of organisational commitment. *Ife Psychologia*, 19(2), 212–227.

Han, Y., Kakabadse, N. K., & Kakabadse, A. (2010). Servant leadership in the Peoples Republic of China: A case of the public sector. *Journal of Management Development*, 29(3), 265–281.

Harm, P. D., & Cree, M. (2010). Remaining issues in emotional intelligence research: Construct overlaps, method artifacts, and lack of incremental validity. *Industrial and Organisational Psychology,* 3(2), 154–158.

Hobfoll, S. E. (2002). Social and psychological resource adaption. *Review of General Psychology,* 6, 307–324.

Hobfoll, S. E. (2011). Conservation of Resource Theory: Its Implications for Stress, Health and Resilience. In S. Folkman and P. E Nathan (Eds.). *The Oxford Handbook of Stress, Health, and Coping*, 127–147. New York: Oxford University Press.

Hu, L., & Bentler, P.M. (1999). Cut of criteria for fit indexes in covariance structure analysis: Conventional criteria versus new alternatives. *Structural Equation Modeling,* 6 (1), 1–55

Iacobucci, D. (2009). Structural equation modeling fit indices, sample size and advanced topics. *Journal of Consumer Psychology,* 20, 90–98.

Jadhav, S., & Mulla, Z. R. (2010). Do emotionally intelligent people do well in all jobs? Exploring the moderating role of inter-personal interaction. *The Journal of Business Perspective,* 14(4), 248–257.

Jensen, S., & Luthans, F. (2006). Relationship between entrepreneurs' psychological capital and their authentic leadership. *Journal of Managerial Issues,* 18(2), 254–273

Jordan, P.J., Ashkanasy, N.M., Hartel, C.E.J., & Hooper, G.S. (2002). Workgroup and emotional intelligence scale development and relationship between team process effectiveness and goal focus. *Human Relations Management Review,* 12 (1), 195–214.

Jordan, P. J. & Lawrence, S. A. (2009). Emotional intelligence in teams: Development and initial validation of the short version of the workgroup emotional intelligence profile (WEIP-S). *Journal of Management and Organisation,* 15, 452–469.

Jorfi, H. Yacco, H. F., & Shah, I. M. (2012). The role of gender in emotional intelligence, communication effectiveness and job satisfaction. *International Journal of Management,* 29(4), 590–599.

Joseph, D. L., & Newman D. A. (2010). Emotional intelligence: An integrative meta-analysis and cascading model, *Journal of Applied Psychology,* 95(1), 54–78.

Joseph, D. L., Jin, J., Newman, A., & O'Boyle, E. H. (2014). Why does self-reported emotional intelligence predict job performance: A meta-analytic investigation of mixed EI, *Journal of Applied Psychology,* 100(2), 298–342.

Kalla, N. (2015). Psychological capital and organisational effectiveness, *International Journal of Business and Management and Allied Sciences, 3(1), 3013-18*

Kasekende, F. (2014). *Managing psychological contract in the public sector in Uganda*, A thesis submitted to the Directorate of Research and Graduate Studies for the Award of the Degree of Doctor of Philosophy, Makerere University.

Kimberly, M., & Scott-Halsell, S. (2012). The effect of perceived external prestige on positive psychological states in quick service restaurants. *Journal of Human Resources in Hospitality and Tourism,* 11(4), 354–372.

Koman, E. S., & Wolff, S. B. (2008).Emotional intelligence competencies in the team and team leader: An examination of the impact of emotional intelligence on team performance. *Journal of Management Development,* 27(1) 55–78.

Koys, D. J., & DeCotiis, T. A. (1991). Inductive Measures of Psychological climate.*Human Relations,* 44(3), 265–286.

Krejcie, V, R., & Morgan, W. D. (1970). Determining sample size for research activities. *Educational and Psychological Measurement,* 30, 607–610.

Larson, M., & Luthans, F. (2006). Potential added value of psychological capital in predicting work attitudes. *Journal of Leadership and Organizational Studies,* 13(2), 75–92.

Law, K. S, Wong, C. S., & Song, L. J. (2004). The construct and criterion validity of emotional intelligence and its potential utility for management studies. *Journal of Applied Psychology,* 89(3), 483–496.

Lindebaum, D., & Cartwright, S. (2011). Leadership effectiveness: The costs and benefits of being emotional intelligent. *Leadership and Organizational Development Journal,* 32, 281–290.

Liu, C., Wang, L., & Zhao, Q. (2015). Factors related to health-related quality of life among Chinese psychiatristis: occupational stress and psychological capital. *BMC Health Services Research,* 1520.

Luthans, F., & Jensen, S. M. (2005). Hope: A new positive strength for human resource development. *Human Resource Development Review,* 1, 304–322.

Luthans, F., Luthans, K. W. W., & Luthans, B. C. (2004). Positive psychology: Beyond human and social. *Business Horizons,* 47(1), 45–50.

Luthans, F., & Youssef, C. M. (2002). Human, social and now positive psychological capital management. *Organizational Dynamics,* 33, 143–160.

Luthans, F., & Youssef, C. M. (2007). Emerging positive organizational behaviour. *Journal of Management,* 33, 321–349.

Luthans, F. (2002).The need and meaning of positive organizational behaviour. *Journal of Organizational Behaviour,* 23, 696–706.

Luthans, F., Avey, J. B., & Peterson, S. (2010). The development and resulting performance impact of psychological capital. *Human Resource Development Quarterly,* 21(1), 41–67.

Luthans, F., Avey, J. B., Clapp-Smith, R., & Li, W. (2008). More evidence on the value of Chinese workers psychological capital: A potential unlimited competitive resource? *The International Journal of Human Resource Management,* 5, 818–827.

Luthans, F., Avolio, B. J., Walumbwa, F. O., & Li, W. (2005). The psychological capital of Chinese workers: Exploring the relationship with performance. *Management and Organization Review,* 1, 249–271.

Luthans, F., Norman, S. M., Avolio, B. J. & Avey, J. B. (2008). The mediating role of psychological capital in the supportive organizational climate-employee performance relationship. *Journal of Organisational Behaviour,* 29(2), 219–238.

Luthans, F., Youssef, C., M. & Avolio, B. J. (2007). Psychological capital management: Measurement and relationship with performance and satisfaction. *Organisational Dynamics,* 33(2), 143–160.

Luthans, J. B., Smith, N. F., & Palmer, N. F. (2010). Impact of positive psychological capital on employee wellbeing overtime. *Journal of Occupational Health Psychology,* 15(1), 17–28.

MacCallum, R. C., Brown, M. W., & Sugawara, H. M. (1996). Power analysis and determination of sample size for covariance structural modelling. *Psychological Methods,* 1, 130–149.

Mafabi, S, Munene, J. C., & Ntayi, J. (2012). Knowledge management and organisational resilience, organisational innovation as a mediator in Uganda parastatals. *Journal of Strategy and Management,* 5(1), 57–80.

Malik, S. Z., & Masood, S. (2015). Emotional intelligence and resistance: Mediating role of psychological capital in the telecommunication sector of Pakistan. *Pakistan Journal of Commerce and Social Science,* 9(2), 485–503.

Marilyn C. A. (2009). *Leadership and PsyCap: A study of the relationship between positive leadership behaviours and followers' positive psychological capital.* Unpublished dissertation presented in partial fulfilment of the requirement for the Degree of Doctor of Philosophy, Capella University.

Mayer, J. D.,& Salovey, P. (1997). What is Emotional Intelligence? In P. Salovey & D. Sluyter (Eds.). *Emotional Development and Emotional Intelligence, Implications for Educators, Basic Books, New York, NY,* pp. 3–31.

Mayer J. D., Salovey P., & Caruso D. R. (2002). Mayer-Salovey-Caruso Emotional Intelligence Test (MSCEIT) Item Booklet. Toronto: MHS Publications.

Mayer, J. D., Salovey, P.& Caruso, D. R.(2002). *Models of Emotional Intelligence Test,* New York: Basic Books.

Mayer, J. D., Salovey, P., & Caruso, D. (2008). Emotional intelligence, new ability or eclectic traits? *American Psychologists,* 63, 503–517.

McMurray, A. J., Pirola-Merlo, A., & Sarros, J. C. (2010). Leadership, climate, psychological capital, commitment, and wellbeing in a non-profit organization. *Leadership and Organization Development Journal*, 31, 436–457.

Mellao, N., & Monico, L. S. M., (2013). The relationship between emotional intelligence and psychological capital. *International Journal of Development and Educational Psychology*, 2(1), 545–550.

Menger, J. I., & Bruch, H. (2009). Organisational emotional intelligence and performance: An empirical study, emotions in groups and cultures. *Research in Emotions in Organisations,* 5, 181–209.

Nahapiet, J. (2011). A Social Perspective: Exploring the links between human capital and social capital. In J. C. Spender & A. Burton-Jones (Eds.). *The Oxford Handbook of Human Capital* (pp. 71–95). Oxford, UK: Oxford University Press.

Nafukho, F. F. M. (2016). Emotional intelligence research within human resource development scholarship. *European Journal of Training and Development,* 40(2), 90–110.

Naphatel, J., & Ghosal, S (1998). Social capital, intellectual capital and the organisation advantage. *Academy of Management Review,* 23, 242–266.

Newman, A., Ucbasaran, D., Zhu F., &Hirst, G. (2014). Psychological capital: A review and synthesis. *Journal of Organizational Behavior* 35(S1), S120–S138.

Ntomous, N. (2009). *A Step by Step Guide to SPSS and Exercise Studies.* London: Routledge.

Nunnally, J. C., & Bernstein, I. H. (1994). *Psychometric Theory* (Third ed.). New York: McGraw-Hill.

Nunnally, J. C. (1978). *Psychometric Theory.* New York: McGraw-Hill.

Pallant, J. (2011). *SPSS Survival Manual, A Step by Step Guide to Data Analysis using SPSS for Windows,* (Fourth Ed.). Sydney: McGraw Hill.

Pareek, U. (1997). *Organisational Ethos: OCTAPACE Profile, in Training Instructions for Human Resource Management.* India: Tata McGraw-Hill Publishing.

Peterson, C. (2000). The Future of Optimism. *American Psychologist,* 55, 44–55.

Peterson, S. J., Luthans, F., Avolio, B. J., Walumbwa, F. O., & Zhang, Z. (2011). Psychological capital and employee performance: A latent growth modelling approach. *Personnel Psychology*, 64, 427–450.

Petrides, K. V., & Furnham, A. (2006). The role of trait emotional intelligence in gender-specific model of organisational variables. *Journal of Personality,* 36 (2), 552–569.

Petrides, K. V., & Furnham, A. (2003). Trait emotional intelligence: Behavioral validation in two studies of emotion recognition and reactivity to mood induction. *European Journal of Personality*, 17(1), 39–57.

Podsakoff, P. M., MacKenzie, S. M., Lee, J., & Podsakoff, N. P. (2003). Common methods variance in behavioural research: A critical review and recommended remedies. *Journal of Applied Psychology*, 88, 879–903.

Pomraning, D. C. (2010). *Organisational emotional intelligence and organisational emotional intelligence factors as antecedents of organisational trust.* Dissertation submitted in partial fulfilment of the requirement for the Degree of Doctor of Philosophy, Psychology. Walden University.

Priyadharshini, R. G., & Rani. C. (2010). A study of the relationship between emotional intelligence, organisational culture and impression management. *Journal of Contemporary Researching Management*, 69–83.

Rabin, S. H (2010). Emotional intelligence and organisational performance: A case of banking sector in Pakistan. *International Journal of Business and Management*, 5(10), 191–197.

Rego, A., Marques, C., Leal, S., Sousa, F., &Cunha, M. P. (2010). Psychological capital and performance of Portuguese civil servants: Exploring neutralizers in the context of an appraisal system. *International Journal of Human Resource Management*, 21(9) 1531–1552.

Rego, P., Lopes, M. P. Nascimento, J. L. (2015). Authentic leadership and organisational commitment: The mediating role of positive psychological capital. *Journal of Industrial Engineering and Management,* 9(1), 2013–151.

Ritzen, J. (2015). *Happiness as a guide to labour market policy*. IZA World of Labour 2015: 149

Ryu, E. (2011). Effects of skewness and kurtosis on normal-theory based maximum likelihood test statistics in multilevel structural equation modeling. *Behaviour Research,* 43, 1066–1074.

Sahin, D. R., Cubuk, D., & Uslu, U. (2013). The effect of organisational support, transformational leadership, personal empowerment, work engagement, performance and demographical variables on the factors of psychological capital. *Journal of Emerging Markets,* 3(3), 1–17.

Schein, E. H. (1992). *Organisational cultures and leadership.* San Francisco, CA: Jossey-Bass.

Sekaran, U. (2003). *Research Methods for Business: A Skill Building Approach.* (Fourth Ed.). USA: John Wiley and Sons Inc.

Seligman, M. E. P (1998). Learned Optimism. New York: Pocket BooksInc.

Seligman, M. E. P., & Csikszentmihalyi, M. (2000). Positive psychology. *American Psychologist,* 55, 5–14.

Snyder, C. R. (1995). Conceptualising, measuring and nurturing hope. *Journal of Counseling and Development,* 73(3), 355–360.

Snyder, C. R.., Sympson, S. C., Ybasco, F. C., Borders, T. F., Babyak, M. A., & Higgins, R. L. (1996).Development and validation of the State Hope Scale. *Journal of Personality and Social Psychology,* 2, 321–335.

Sridevi, G. & Srinivasan, P. T (2012). Psychological capital of evolving literature. *International Journal of Theory & Practice,* 3(1), 1–15.

Stajkovic, A. D., & Luthans, F. (1998). A meta-analysis of the effects of organizational behavior modification on task performance. *Academy of Management Journal,* 40**,** 1122–1149.

Stein, S. J. (2005). Benchmark of Organisational Emotional Intelligence, (BOEI), Technical Manual, Multi-Health Systems Inc.

Steinskog, D. J. (2007). A cautionary note on the use of the Komogorov-Smirnor test for normality. *American Meteor Society,* 135, 1151–1157.

Sui, O. L. (2013). Psychological capital, work well being, and work-life balance among Chinese employees: A cross-lagged analysis, *Journal of Personnel Psychology,* 12, 170181.

Suifan, T. S. (2015). The impact of organisational climate and psychological capital on organisational citizenship behavior. *International Journal of Business and Management*, 11(1), 1833-8119.

Suresh, S., & Venkatammal, P. (2010). Antecedents of organisational citizenship behavior. *Journal of the Indian Academy of Applied Psychology*, 36(2), 276-286.

Sweet, J. D. (2012). *The Relationship between psychological capital and organisational learning dimensions in community medical center. An exploratory survey study.* Unpublished Dissertation, Faculty of the Graduate School of Education and Human Development of the George Washington University in partial fulfilment of the requirements for the Degree of Doctor of Education.

Sweetman, D., Luthans, F., Avey, J. B., & Luthans, B. C. (2011). Relationship between positive psychological capital and creative performance.*Canadian Journal of Administrative Science*, 20, 4–13.

Tettegah, S. (2012). *Teacher Identity, Psychological Capital and Electronically mediated representation of cultural consciousness.* Proceedings of the world conference on Educational Multimedia, Hypermedia and Telecommunications, 2002, ACCE, Chesapeake, VA, 1946–7.

The State of Uganda's Population Report, (2010).

Thorndike, E. L. (1920). Intelligence and its uses. *Harper's Magazine,*140, 227–235.

Toor, S., & Ofori, G. (2010). Psychological capital as a source of sustainable competitive advantage for organizations. *Journal of Construction Engineering and Management,* 136(3), 341–352.

Triandis, H. C., (2007). Culture and Psychology. A History of the Study of their Relationship. In S. Kitayama and D. Cohen (Eds.). *Handbook of Cultural Psychology*,(pp. 59–76). NewYork: Guilford Press.

Uganda Vision 2040 Document (2013). A Transformed Uganda Society from a Peasant to a Modern and Prosperous Country within 30 years. Uganda Printing Press.

Van der Eijk, C., & Rose, J. (2015). Risky business: Factor analysis of survey data-assessing the probability of incorrect dimensionalisation. *PloS ONE,* 10(3), 1–31.

Venters, J. W (2012). A study of the relationship between leader psychological capital and leader 360 degree leadership assessments. Unpublished PhD thesis, Our Lady of the Lake University, San Antonio, Texas.

Walumbwa, F. O. Avolio, B.J., & Zhu, W. (2008). How transformational leadership weaves, its influence on individual job performance: The role of identifications and self-efficacy beliefs. *Personnel Psychology,* 61, 793–825.

Walumbwa, F. O., Peterson, S. J., Avolio, B. J., & Hartnell, C. A. (2010). An Investigation of the relationships among leaders and followers psychological capital, service climate, and job performance.*Personnel Psychology,* 63, 937–963.

Walumbwa, F. O., Luthans, F., Avey, B. J., & Oke, A. (2011). Authentically leading groups: The mediating role of collective psychological capital and trust. *Journal of Organisational Behaviour,* 32(4), 4–24.

Wang, Y., Liu, L, Wang, J., & Wang, L. (2012). Work-family conflict and burnout among Chinese doctors: The mediating role of psychological capital. *Journal of Occupational Health,* 54, 232–240.

Weijers, D., Jarden, A., Angner, E., Burns, G., Chadwick, E., & Thin, N. (2013). Review of the Oxford handbook of happiness.*International Journal of Well Being,* 3(2), 213–228.

Weston, R. & Gore, Jr. (2006). A brief guide to structural equation modeling, *Counselling Psychology*, 32, 719–751.

Wooley, L. Caza, A.,& Levy, L. (2010). Authentic leadership and follower development, positive work climate, and gender. *Journal of Leadership and Organisational Studies,* 18, 438–448.

Youssef, C. M., & Luthans, F. (2007). Positive organisational behavior in the workplace: The impact of hope, optimism and resiliency. *Journal of Management,* 33, 774-800.

Zeidner, M., Roberts, R. D., & Matthews, G. (2008). The science of emotional intelligence: Current consensus and controversies. *European Psychologists,* 13, 64–78.

APPENDICES

Appendix 1: Introduction Letter to Heads of Public Service Organisations

Appendix 2: Invitation Letter to Voluntarily Participate in the Study

Appendix 3: Participant's Consent Form

Appendix 4: Psychological Capital Questionnaire

Appendix 5: Invitation to Participants to Continue in the Study

Appendix 6: Organisational Emotional Intelligence Questionnaire

Appendix 7: Sample Organisations that Accepted/Not Accepted to Participant in the Study

Appendix 8: Summary Statistics for Factor Analysis Statistics

Appendix 9: Principal Component Analysis

- 9a: Psychological Capital Rotated Component Matrix
- 9b: Job Happiness Component Matrix
- 9c: Compensation Satisfaction Component Matrix
- 9d: Supervisory Leadership
- 9e: Organisational Cohesiveness Component Matrix
- 9f: Organisational Cohesiveness Rotated Component Matrix
- 9g: Organisational Responsiveness Rotated Component Matrix
- 9h: Work-Life Balance Rotated Component Matrix
- 9i: Diversity Management Rotated Component Matrix
- 9j: Impression Management Rotated Component Matrix

Appendix 10: Reliability Analysis for Study Variables

Appendix 11: Missing Value Analysis

Appendix 12: Normality Tests

- 12a: Normality: Skewness and Kurtosis
- 12b: Normality: K-S Tests
- 12c: Normality: Histograms
- 12d: Normality: P-P Plots
- 12e: Normality: Q-Q Plots

Appendix 13: Linearity Tests:

- 13a: Linearity: Scatter Plots
- 13b: Linearity: Regression P-P Plots

13c: Linearity: F-Statistic

Appendix 14: Collinearity Analysis:

14a: Collinieearity: Tolerance and Variance Inflation Factor

14b: Collinearity: Condition Index

14c: Collinearity: Durban Watson Auto Collinieearity

Appendix 15: Discriminant Validity and Composite Reliability for Study Variables

Appendix 1: Introduction Letter to Heads of Public Service Organisations

10 June 2014

[Insert CEOs Title and Organisational Name]

SEEKING PERMISSION TO COLLECT DATA ON ORGANISATIONAL EMOTIONAL AND PSYCHOLOGICAL RESOURCES AMONG EMPLOYEES

The purpose of this letter is to seek permission to collect data among employees in the organisation. The aim of the study is to examine employees' evaluation of workplace positive emotional and psychological resources for purely academic purposes. Psychological capital has been empirically established as a precursor to organisational positive outcomes including commitment, satisfaction, engagement, and wellbeing and citizenship behaviour. However, the predictors of psychological capital have not been fully tested in developing economy like Uganda.

The data for this study will be collected from randomly selected managers and other staff employees in the workplace, using the psychological capital questionnaire, with other control variables. This will be followed by filling a second questionnaire on organisational emotional intelligence after one month, between the months of September and December 2014. By combining the survey results from all employees, the study will contribute to a richer understanding of important positive workplace psychological capital predictors in organisations. This will facilitate future development of comprehensive practical and context interventions in organisational effectiveness in Uganda.

The information received in the process of undertaking this study will be confidentially handled. We wish to assure you that no individual person or organisational views will be published for this study; instead aggregated data will be used for analysis and dissemination.

Your institution is a valued agency in the public sector in Uganda; we hope you will authorize us to randomly select employees to make a contribution to this study about Uganda's level of positivity. Findings will be disseminated during Makerere University Business School Annual conferences, though organisational in-house presentations can be organised on request.

Yours faithfully

Jolly Kabagabe Byarugaba (jkabagabe@mubs.ac.ug) Prof Drikus Kriek
Ugandan Lead Researcher ((+256 772 417 440) Research Advisor

……

Acceptance:

We have [Accepted/Not Accepted] this organisation to participate in the survey on:
Organisational Emotional Intelligence and Employee Psychological Capital in Uganda
Signed:……Date:……
Copy: Principal, Dean Graduate School, Makerere University Business School

Appendix 2: Invitation Letter to Voluntarily Participate in the Study

Dear Sir/Madam:

INVITATION TO PARTICIPANT IN STUDY ON ORGANISATIONAL EMOTIONAL INTELLIGENCE AND PSYCHOLOGICAL CAPITAL

You have been purposively identified as a key participant to contribute to this study. The overall purpose of this study is to examine employees' perceptions on workplace positive organisational emotional and psychological resources in Uganda. As a result of your knowledge in public service, you are thoughtfully invited to participant in filling questionnaire one: on workplace employee psychological, leader emotional resources and personal characteristics.

We shall follow you up to fill the second questionnaire on organisational emotional intelligence. By combining the data from both questionnaires, the researchers hope to contribute to a richer understanding of the organisational emotional intelligence-psychological capital model.

This is purely an academic study. The validity of this study depends on your integrity in filling the questionnaire(s) honestly. The researchers will ensure that all information collected is confidentially handled; only aggregated data will be used for analysis. No individual or organisational information will be analysed independently, or published during the dissemination of findings for this study.

If you accept to participate in this study, fill in the attached questionnaire; which will be followed up with another questionnaire in a month's time. Participation in this study is involuntary, and you are free to withdraw from the study at any time.

About the Researchers:

This study is being undertaken by Jolly Kabagabe Byarugaba, of Makerere University Business School, Faculty of Management, as the lead Ugandan researcher. Professor Drikus Hendrik of Witwatersrand University, Business School is the research advisor. For information and comments can be addressed to:

Jolly Kabagabe Byarugaba, Makerere University Business School, Faculty of Management
Department of Human Resource Management:
jkabagabe@mubs.ac.ug, +256772-417-440

Appendix 3: Participant's Consent Form

PARTICIPANT'S CONSENT FORM

The purpose of this research project is to examine organisational emotional intelligence and psychological capital resources in public sector organisations.

I am voluntarily consenting to participate in this study. Participating in this study involves the following:

- Filling questionnaire one: on psychological capital and other control variables.
- Filling questionnaire two: on organisational emotional intelligence constructs.
- Not responding to any questions that may create discomfort to me.
- Freely withdrawing from the study at any time.

Signed:

…… Date:

Appendix 4: Psychological Capital Questionnaire and other control variables

Employee Personal Psychological Capital: The following statements describe some of employee characteristics in the workplace. In each of the statements below: Please visualize *yourself in your workplace, read and rate EACH statement, describing your workplace thoughts, feelings or behaviours. Circle or tick the extent to which <u>you agree or disagree</u> with the statements using the following scale.*

1=Very Strongly Disagree, 2=Strongly Disagree, 3=Disagree; 4=Moderately Agree; 5=Completely Agree, 6=Strongly Agree, 7=Very Strongly Agree

<u>The following statements apply to me in the workplace…</u>

1. I am confident analysing a long term problem to find solution
   [1] [2] [3] [4] [5] [6] [7]
2. I feel confident in representing my work area in meetings with management
   [1] [2] [3] [4] [5] [6] [7]
3. I feel confident in contributing to the discussions about organisational strategy
   [1] [2] [3] [4] [5] [6] [7]
4. I feel confident about helping to set goal in my work area
   [1] [2] [3] [4] [5] [6] [7]
5. I feel confident contacting people outside the organisation [for example government officials, customers etc] to discuss challenges in my work
   [1] [2] [3] [4] [5] [6] [7]
6. I feel confident presenting information to a group of colleagues
   [1] [2] [3] [4] [5] [6] [7]
7. If I should find myself facing problems in my work' I could think of many ways to get out of it *[1] [2] [3] [4] [5] [6] [7]*
8. At present, I energetically pursuing my work goals
   [1] [2] [3] [4] [5] [6] [7]
9. There are always a lot of ways around any challenge in my job
   [1] [2] [3] [4] [5] [6] [7]
10. Right now, I can see myself as being pretty successful at my workplace
    [1] [2] [3] [4] [5] [6] [7]
11. I think of many ways to reach my current work goals
    [1] [2] [3] [4] [5] [6] [7]
12. At times I met the goals I have set for myself
    [1] [2] [3] [4] [5] [6] [7]

Note: full instrument can be accessed for academic purposes with permission from Luthans and Youssef (2004)

Appendix 5: Invitation to Participants to Continue in the Study (fill questionnaire 2)

Dear Sir/Madam:

We appreciate you for completing the psychological capital questionnaire. You are invited to fill the second questionnaire of the study on Organisational Emotional Intelligence (Org-EQ) and Psychological capital (PsyCap). This questionnaire will examine employees' perceptions on positive organisational emotional intelligence. By combining the data from both questionnaires, the researchers hope to contribute to a richer understanding of the organisational emotional intelligence-psychological capital model. This will facilitate the development of comprehensive practical and contextual interventions to be recommended to organisations in a developing world like Uganda.

If you wish to continue your participation in the EQ-PsyCap study, please fill the attached questionnaire. You are free to withdraw from the participation of this study at any time.

I <u>Accept to continue in the study/ I do not Accept</u> to continue with this study on ORG-EQ and PsyCap.

Appendix 6:Organisational Emotional Intelligence Questionnaire

Organisational Emotional Intelligence: In each of the statements below: Please visualize *yourself in your workplace, read and rate to what extent the statement describe your workplace thoughts, feelings or behaviours you agree or disagree with the statements.*

[7]= Very Strongly Agree [6] = Strongly Agree [5]=Completely Agree [4]= Agree [3]=Moderately Agree [2] = Disagree [1]=Strongly Disagree/Not Applicable[NA]

The following statements apply to my workplace…

1. There is opportunity for career advancement for me within this organization
   [1] [2] [3] [4] [5] [6] [7]
2. My pay is consistent with the industry standard for my occupation
   [1] [2] [3] [4] [5] [6] [7]
3. During the past six months, I have had a change in my work schedule
   [1] [2] [3] [4] [5] [6] [7]
4. My organization has a winning attitude. *[1] [2] [3] [4] [5] [6] [7]*
5. My workgroup works very well together as a team
   [1] [2] [3] [4] [5] [6] [7]
6. I am generally satisfied with the person who supervises me
   [1] [2] [3] [4] [5] [6] [7]
7. My organization is too slow in making decisions
   [1] [2] [3] [4] [5] [6] [7]
8. My co-workers are never late for work
   [1] [2] [3] [4] [5] [6] [7]
9. I always feel like I fit in with my coworkers
   [1] [2] [3] [4] [5] [6] [7]
10. The training in my workplace is based on what I really need to get the job done
    [1] [2] [3] [4] [5] [6] [7]
11. My organization strives for excellence in all it does
    [1] [2] [3] [4] [5] [6] [7]
12. My organization is flexible in responding to change
    [1] [2] [3] [4] [5] [6] [7]

13. The quality of this organisation's benefit package is one of the reasons I stay
    [1] [2] [3] [4] [5] [6] [7]

***Open personal Opinions**: Please provide your views on the following three items:*

14. *Please describe characteristics of someone you would consider to be a successful person in your workplace:*
    ……

15. *Please describe some behaviors or actions of someone you have observed in the workplace as a successful people in workplace life.*
    ……
16. *Please describe what you consider to be important feelings, behaviours or actions of employee who wish to succeed in the workplace:*
    ……

Note: The full instrument can be accessed for academic purposes with permission from Stein (2005)

Appendix 8: Summary Statistics for Exploratory Factor Analysis

No	(OEI)	KMO	Barlets Test			Determinant	No of Factors
	Dimensions of OEI **(IVs)**		X^2	df	sig		
1	Job Happiness	0.717	209.33	3	0.000	0.605	1
2	Compensation Satisfaction	0.742	884.69	21	0.000	0.317	2
3	Supervisory Leadership	0.872	1439.75	15	0.000	0.092	1
4	Organisational Cohesiveness	0.836	1392.95	36	0.000	0.096	2
5	Organisational Responsiveness	0.910	3434.20	171	0.000	0.001	4
6	Work-life balance	0.726	382.34	15	0.000	0.525	2
7	Diversity Management	0.819	1433.16	55	0.000	.073	3
8	Impression Management	0.710	637.32	28	0.000	0.539	2
	DV						
1	PsyCap	0.822	1788.99	91	0.000	0.040	4

Appendix 9: Principal Component Analysis

Appendix 9a: Psychological Capital Rotated Component Matrix

Rotated Component Matrix

	Component			
	1	2	3	4
I feel confident in contributing to the discussions about organisational strategy	.785			
I feel confident in representing my work area in meetings with management	.771			
I feel confident about helping to set goal in my work area	.708			
I am confident analyzing a long-term problem to find a solution	.619			
I usually take stressful things at work step by step		.721		
I can get through difficult times at work, of difficulties I have experienced before		.664		
At times I met the goals I have set for myself		.623		
I think of many ways to reach my current work goals		.556		
I feel I can handle many things at the same time at my workplace			.772	
When things are uncertain for me at work, I usually expect the best			.726	
I feel confident presenting information to a group of colleagues			.644	
I am prepared to accept anything that can happen to me at work				.772
I always look on the right side of things regarding my work				.689
I approach my work with the attitude that something positive will always turn out, not matter how challenging situations present themselves				.420
Total eigein values	2.358	2.072	1.861	1.450
% of variance Explained	18.428	14.798	13.294	10.357
Cumulative percentage	18.428	33.226	46.519	56.875

Appendix 9b: Job Happiness Component Matrix

	Component
	1
I would enthusiastically recommend this organization to others	.786
My job gives a sense of fulfillment	.754
I would highly recommend our product or service to others	.713
Total Eigen values	1.567
% variance explained	52.236
Cumulative percentage	52.236

Extraction Method: Principal Component Analysis.

Appendix 9c: Compensation Satisfaction Component Matrix

	Component 1	2
This organisation's benefits is adequate for the work I perform	.761	
The pay package here provides incentives to those who work hard	.714	
The quality of this organisation's benefit package is one of the reasons I stay	.687	
When are requested to work extended hours outside of my regular work hours, I feel adequately compensated.	.656	
My pay is consistent with the industry standard for my occupation	.646	
This organisation's benefit package is below industry standards		.791
This organisation's bonus plan [additional pay for performance] is not satisfactory		.778
Total eigen values	2.411	1.415
% variance explained	34.450	20.216
Cumulative percentage	34.450	54.665

Extraction Method: Principal Component Analysis.
Rotation Method: Varimax with Kaiser Normalization.

Appendix 9d: Supervisory Leadership

	Component 1
My supervisor performs his/her role effectively	.814
I have trust in my supervisors' decisions	.782
My supervisor is a good a coach/ mentor	.779
My supervisor provides helpful feedback to me	.768
My supervisor is good at maintaining successful working relationships	.741
I am generally satisfied with the person who supervises me	.706
Totat eigen values	3.517
% variance explained	58.625
Cumulative percentage	58.625

Appendix 9e: Organisational Cohesiveness Component Matrix

	Component	
	1	2
I feel supported by my coworkers	.772	
Members of my workgroup feel a sense of loyalty to each other	.768	
My workgroup is highly productive	.746	
My workgroup works very well together as a team	.741	
I feel I can trust my co-workers	.732	
The skills and abilities of members of my workgroup complement each other	.714	
There are times when I feel I cannot talk to my coworkers		.752
My coworker are insensitive to each other's feelings		.745
It is difficult for new people to be accepted into my workgroup		.717
Total Eigen values	3.343	1.651
%variance explained	37.140	18.347
Cumulative percentage	37.140	55.487

Extraction Method: Principal Component Analysis.
Rotation Method: Varimax with Kaiser Normalization.

Appendix 9f: Organisational Cohesiveness Rotated Component Matrix

	Component	
	1	2
I feel supported by my coworkers	.772	
Members of my workgroup feel a sense of loyalty to each other	.768	
My workgroup is highly productive	.746	
My workgroup works very well together as a team	.741	
I feel I can trust my co-workers	.732	
The skills and abilities of members of my workgroup complement each other	.714	
There are times when I feel I cannot talk to my coworkers		.752
My coworker are insensitive to each other's feelings		.745
It is difficult for new people to be accepted into my workgroup		.717
Total Eigen values	3.343	1.651
%variance explained	37.140	18.347
Cumulative percentage	37.140	55.487

Appendix 9g: Organisational Responsiveness Rotated Component Matrix

	Component			
	1	2	3	4
My organization has a winning attitude.	.713			
My organization strives for excellence in all it does	.708			
My organization is flexible in responding to change	.671			
This organization has well-developed career path program that provides training to help employees progress.	.649			
This organization systematically solves problems	.646			
Our customers/clients are satisfied with our products or service	.616			
This organization has the courage to address its mistakes	.615			
This organization takes seriously the comments and needs of customers and clients	.596			
The training in my workplace is based on what I really need to get the job done	.545			
This organization is slow to make needed changes		.774		
This organization rarely has the courage to make tough decisions		.721		
This organization is unable to move quickly when opportunities arise		.706		
Senior management rarely communicates a clear vision of where we are going		.640		
The organization has courage to confront difficult issues			.705	
Senior management in this organization is receptive to input from employees			.662	
This organization's positive atmosphere energizes me			.530	
This organization adequately uses knowledge, skills or training that its employees currently have				.668
My organization meets challenges head on				.653
Total eigen values	4.424	2.438	2.032	9.192
%variance explained	23.292	12.821	10.697	9.192
Cumulative percentage	23.283	36.115	46.811	56.003

Extraction Method: Principal Component Analysis.
Rotation Method: Varimax with Kaiser Normalization.

Appendix 9h: Work-Life Balance Rotated Component Matrix

Work-life balance items	Component	
	1	2
Due to job demands, I rarely have enough time for my friends or family	.729	
Due to job demands, I find it difficult to balance work with other life issues	.684	
Unrealistic deadlines make it difficult to get the job done	.657	
Unpredictable work hours cause significant problems in my personal or family life	.649	.314
During the past six months, I have had a change in my work schedule		.858
Changes during the past 6 months have made it a lot more difficult to get the job done		.576
Total eigen values		
% variance explained		
Cumulative percentage		

Extraction Method: Principal Component Analysis.
Rotation Method: Varimax with Kaiser Normalization.

Appendix 9i: Diversity Management Rotated Component Matrix

Diversity Management Component Matrix	Component 1	2	3
During the past 6 months, some individuals have been so upset that they did not things to negatively impact on the organization	.730		
During the past 6 months, some individuals have been so upset at work that they purposely did things to get back at their supervisors	.730		
During the past 6 months, there have been conflicts here at work involving shouting and name calling.	.712		
During the past 6 months, there have been physical confrontations between individuals here at	.688		
During the past 6 months, there have been times when individuals have been upset that they lost control of themselves while at work	.608		
Some people within this organization have been discriminated against because of their race/tribe	.402		
Employees with psychological disabilities or difficulties are discriminated against within this organization		.770	
Employees with physical limitations or disabilities are not treated fairly by this organization		.727	
Some people have experienced racial harassment or racial/tribal intimidations at this organization		.626	
People in this organization are treated fairly, regardless of age			.838
People here are treated fairly regardless of age, race, gender, physical limitations, or disability			.837
Total eigen values	2.690	1.817	1.743
% variance explained	24.458	16.517	15.844
Cumulative percentage	24.458	40.975	56.818

Extraction Method: Principal Component Analysis.
Rotation Method: Varimax with Kaiser Normalization.

Appendix 9j: Impression Management Rotated Component Matrix

Item	Component	
	1	2
I am very proud to work here	.828	
This organization functions perfectly	.785	
I am completely honest with my supervisor	.695	
The managers of this organization could not be any better than they are now		.769
Managers and supervisors say one thing but always do another		.765
Total Eigen Values	1.863	1.229
% of Variance Explained	37.259	24.589
Cumulative percentage	37.259	61.848

Extraction Method: Principal Component Analysis.
Rotation Method: Varimax with Kaiser Normalization.

Appendix 10: Reliability Analysis for Study Variables

Alpha Coefficients for Study Variables

	Variable	Alpha coefficient	Items	AVE	CR
DV	Psychological Capital (PsyCap)	.877	24	.500	.670
	PsyCap-Self Efficacy	.756	6		
	PsyCap-Hope	.709	6		
	PsyCap-Resilience	.688	6		
	PsyCap-Optimism	.647	6		
IV	Organisational Emotional Intelligence	.925	115	.560	.740
	Job Happiness	.684	6		
	Compensation Satisfaction	.701	10		
	Work Life Balance	.671	6		
	Organisational Cohesiveness	.785	18		
	Supervisory Leadership	.883	12		
	Diversity Management	.713	8		
	Organisational Responsiveness	.844	36		
	Positive Impression	.691	5		

Appendix 11: Missing Value Analysis

EM Means[a]

Job Hapi	Comp Sat	Sup LEd	OrgCoh	Org REsp	Wok LIfb	Div Manag	Imp Manag	OEI	PsyCap SElf	PsyCap HOp	PsyCap OPt	PsyCap REs	PsyC api
.0107	.0160	.0107	.0122	.0119	.0070	-.0009	.0173	.0107	.0061	.0037	-.0036	.0032	.0022

a. Little's MCAR test: Chi-Square = 1427.484, DF = 1474, Sig. = .803

Appendix 12 Normality Tests

Appendix 12a: Normality Test: (Skewness and Kurtosis)

Statistics

		PSYCAP_1	JH_1	CO_1	WL_1	OC_1	SL_1	DA_1	OR_1	PI_1	OIE_1
N	Valid	668	668	668	668	668	668	668	668	668	668
	Missing	0	0	0	0	0	0	0	0	0	0
Skewness		.129	-.111	.214	.091	.222	-.131	.291	.078	.193	.155
Std. Error of Skewness		.095	.095	.095	.095	.095	.095	.095	.095	.095	.095
Kurtosis		-.442	-.406	-.224	-.359	.485	-.131	.148	-.074	-.134	-.082
Std. Error of Kurtosis		.189	.189	.189	.189	.189	.189	.189	.189	.189	.189
Minimum		3.25	2.00	1.75	1.40	1.51	2.07	2.52	2.44	1.25	2.56
Maximum		6.88	7.00	6.38	6.00	6.34	6.40	5.48	6.64	6.13	5.73

Appendix 12b: Normality Test: Kolmogorov-Smirnov/Shapiro-Wilk

	Kolmogorov-Smirnov[a]			Shapiro-Wilk		
	Statistic	Df	Sig.	Statistic	df	Sig.
SelfEffi	.064	668	.000	.990	668	.000
Hop	.055	668	.000	.992	668	.001
OPtimi	.059	668	.000	.990	668	.000
REsili	.078	668	.000	.986	668	.000
PsyCapit	.057	668	.000	.994	668	.007
JOHapi	.067	668	.000	.993	668	.004
COMPSati	.048	668	.001	.987	668	.000
SUpervLead	.031	668	.190	.997	668	.173
ORgCOhe	.049	668	.001	.994	668	.009
ORgRespo	.031	668	.182	.995	668	.034
DIverseMgt	.086	668	.000	.972	668	.000
WLBal	.053	668	.000	.992	668	.001
ImpresMgt	.050	668	.001	.993	668	.004
OrgEmotioQ	.031	668	.196	.996	668	.058

a. Lilliefors Significance Correction

Appendix 12c(i): Normality Test: Histogram – PsyCap

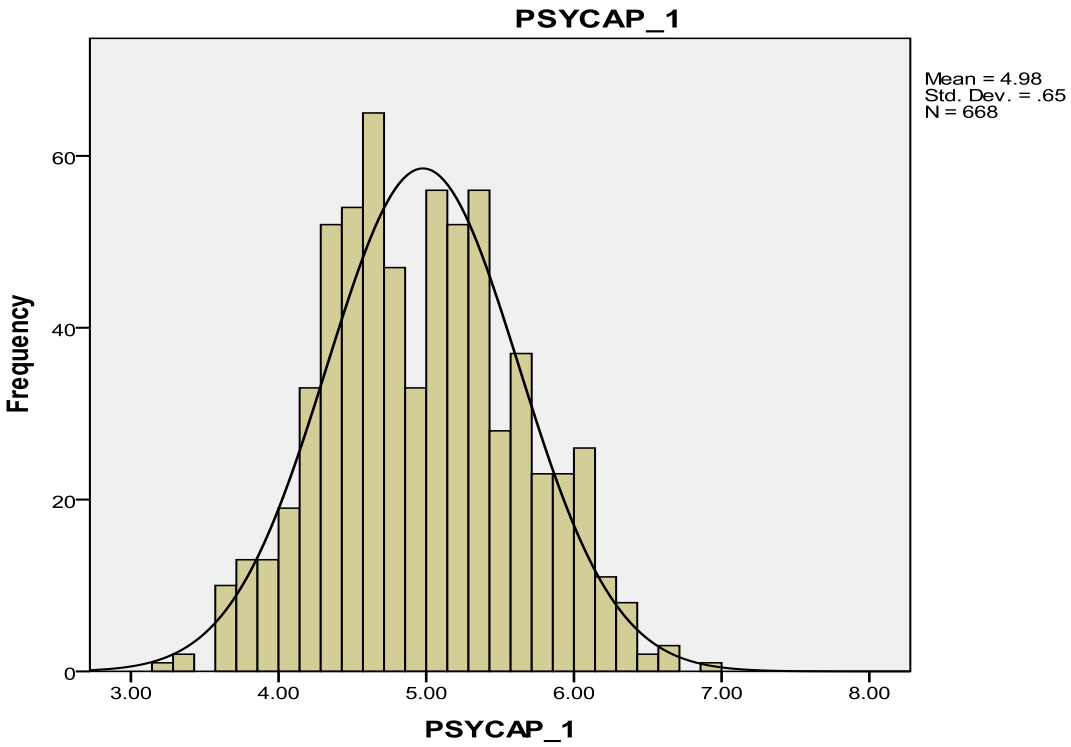

Appendix 12c (ii): Notmality Test: Histogram – OrganisationalEmotional Intelligence

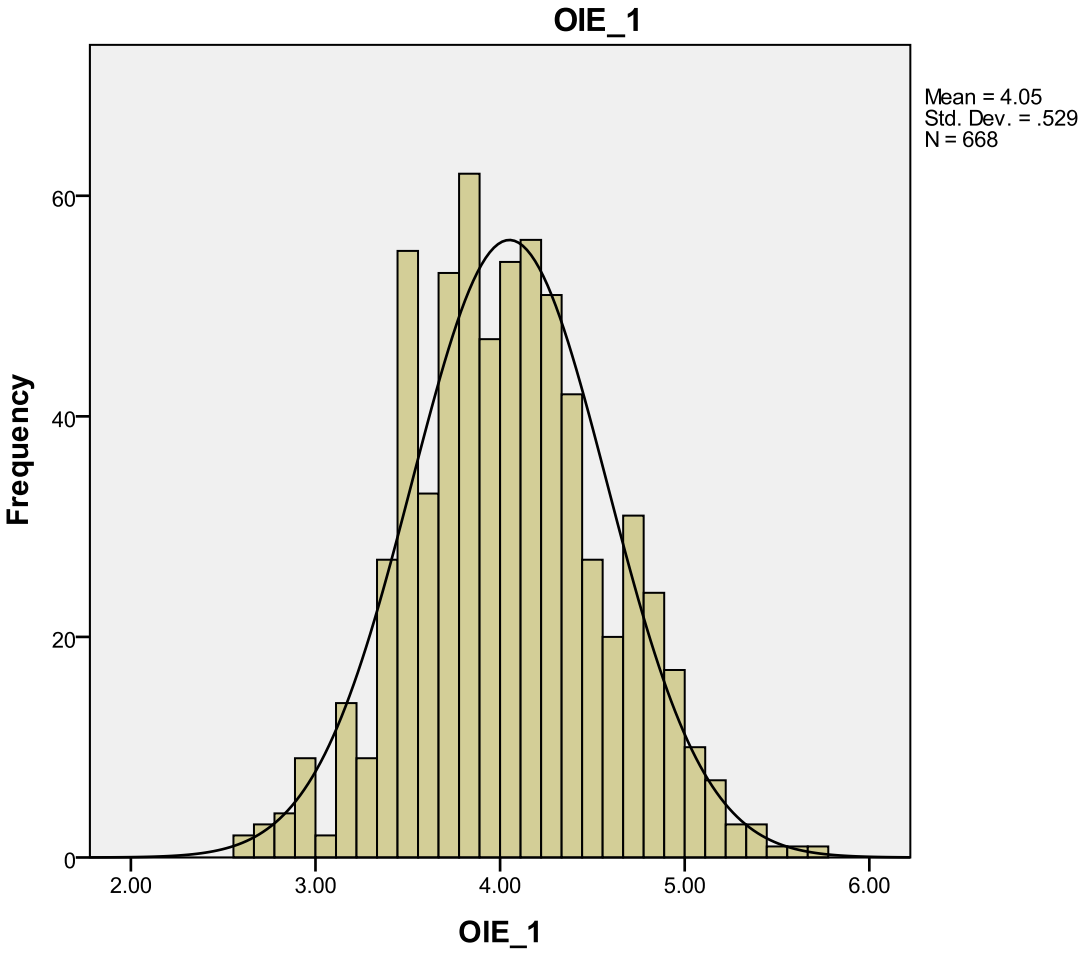

Appendix 12d (i): Normality P-P Plots – Psychological Capital

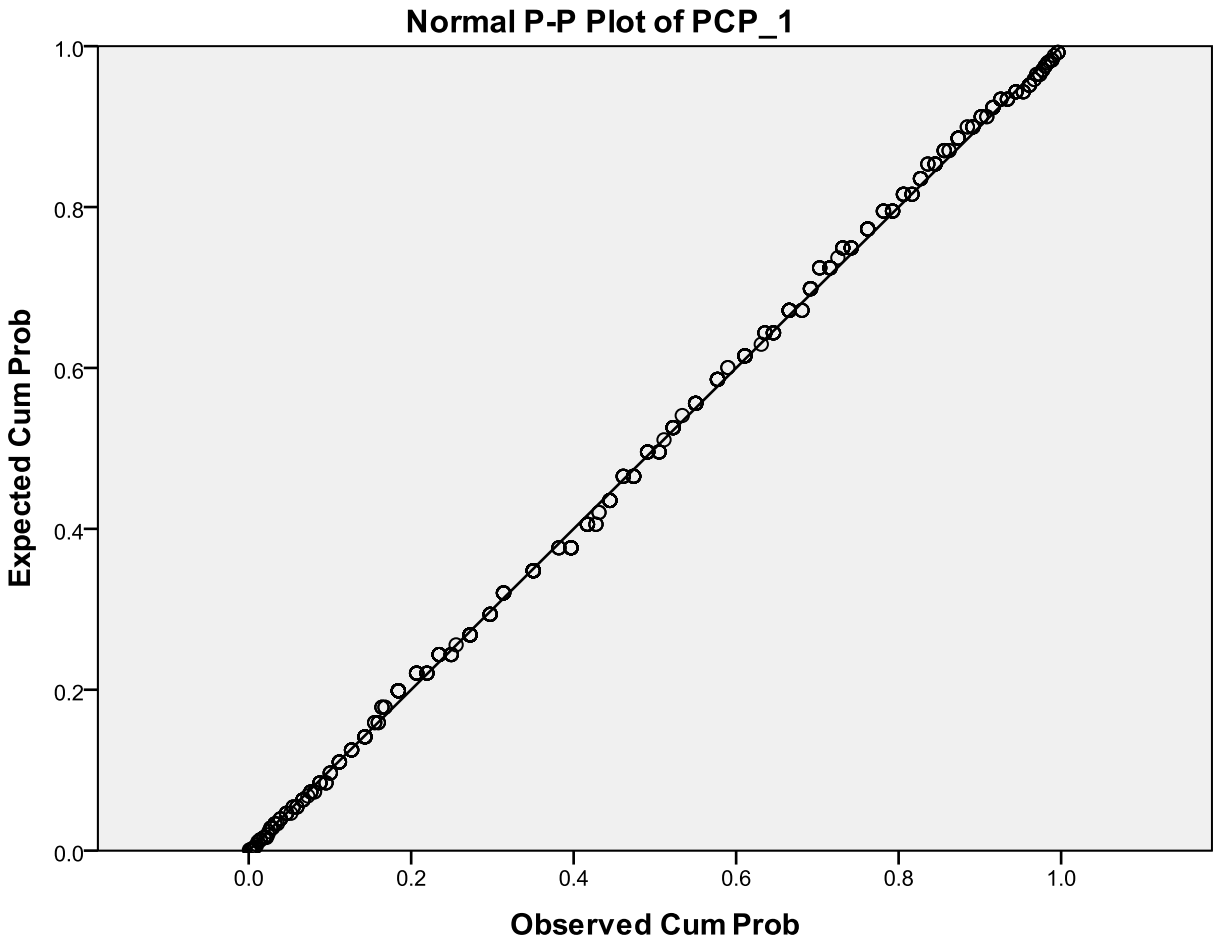

Appendix 12d (ii): Normality P-P Plots – Organisational Emotional Intelligence

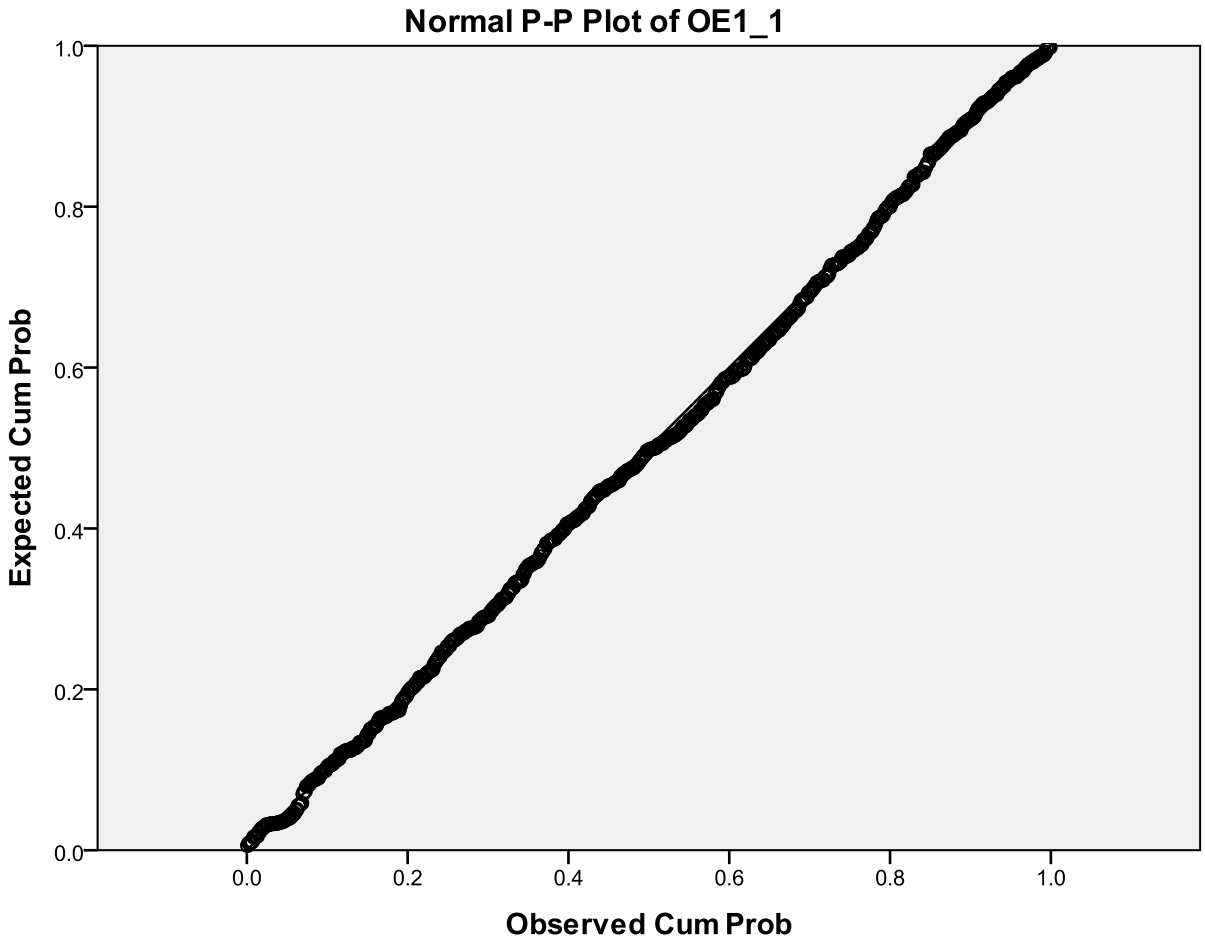

Appendix 12e (i): Normality Q-Q Plots – Psychological Capital

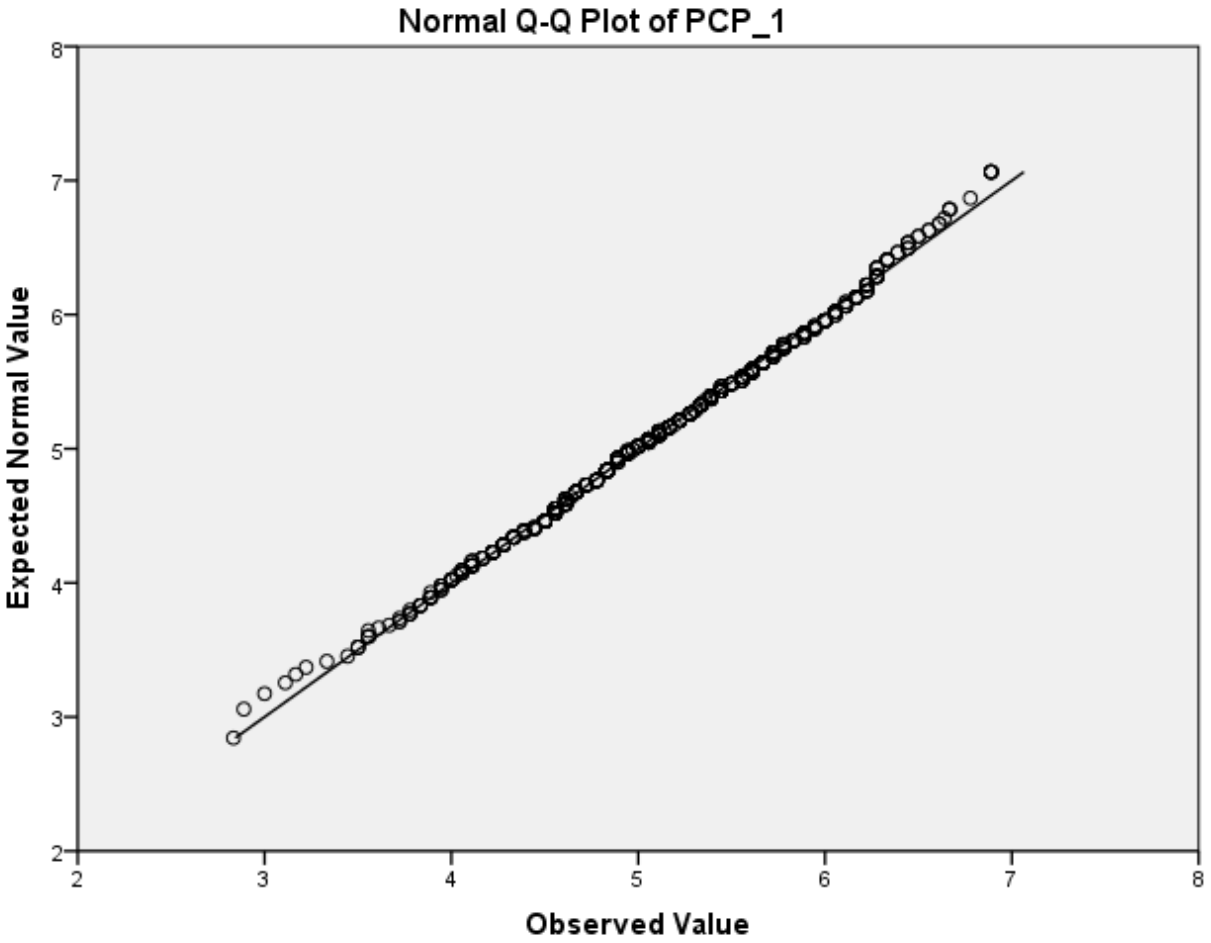

Appendix 12e (ii): Normality Q-Q Plots – Organisational Emotional Intelligence

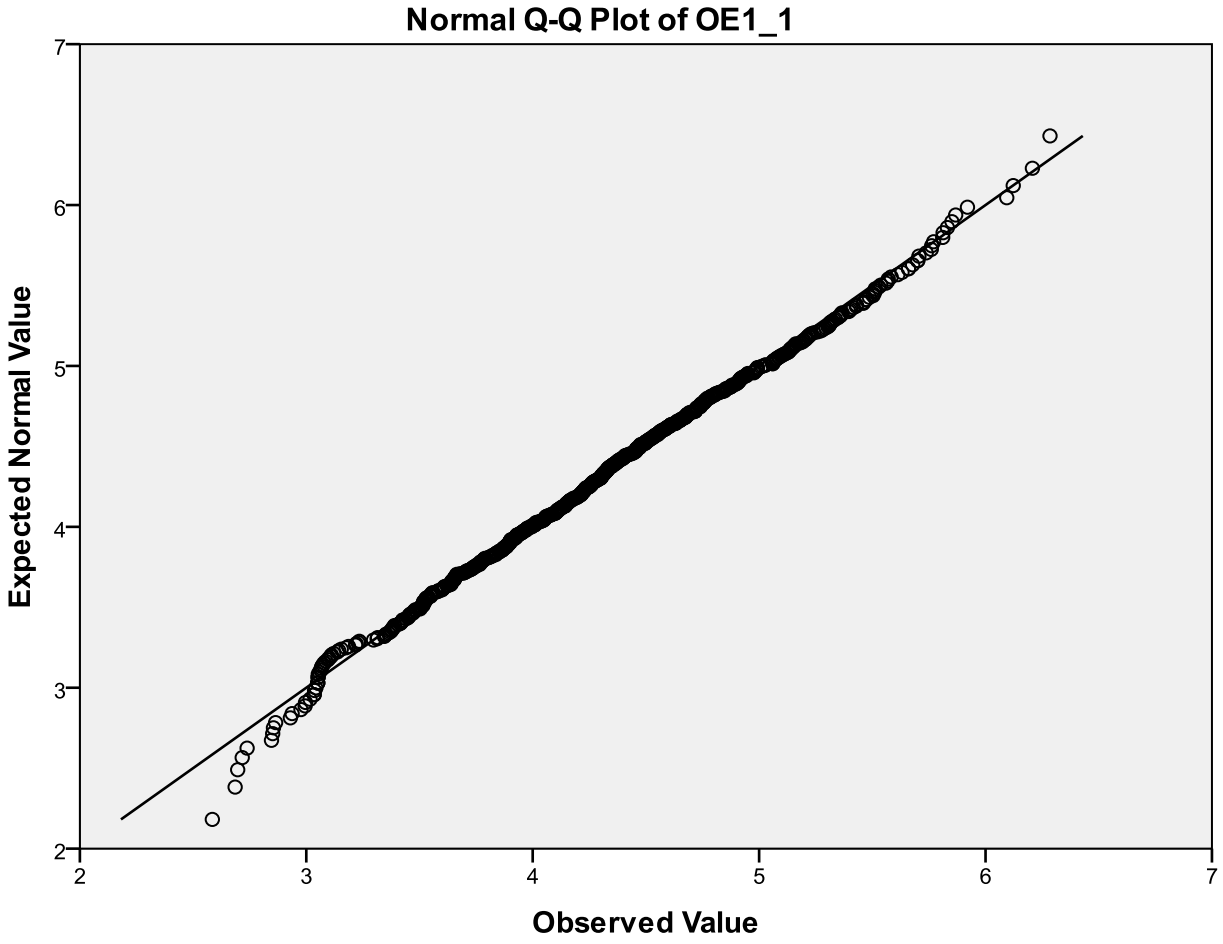

Appendix 13: Linearity Tests

Appendix 13a: Linearity Test: Scatter Plots

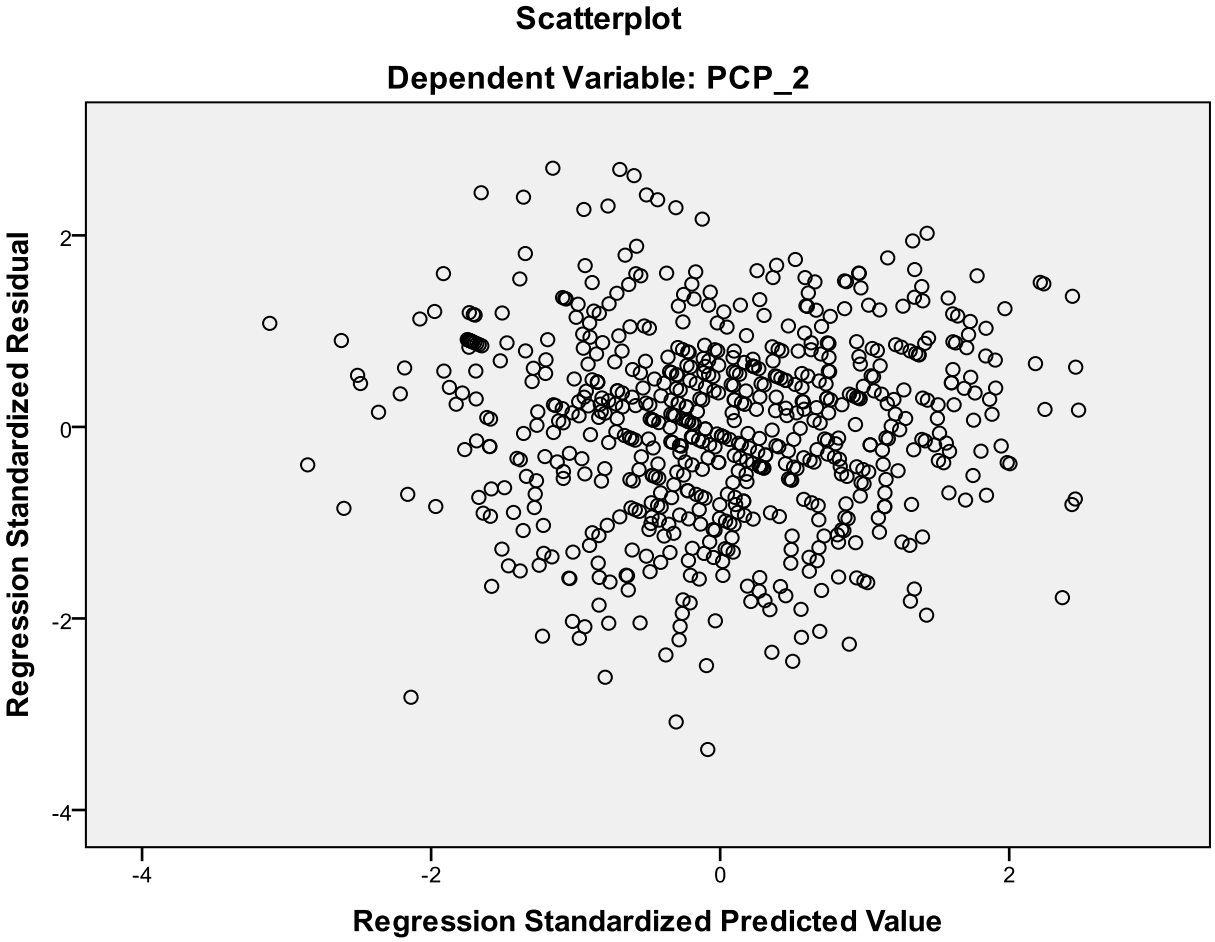

Appendix 13b: Linearity Tests: Regression P-P Plots (Linearity)

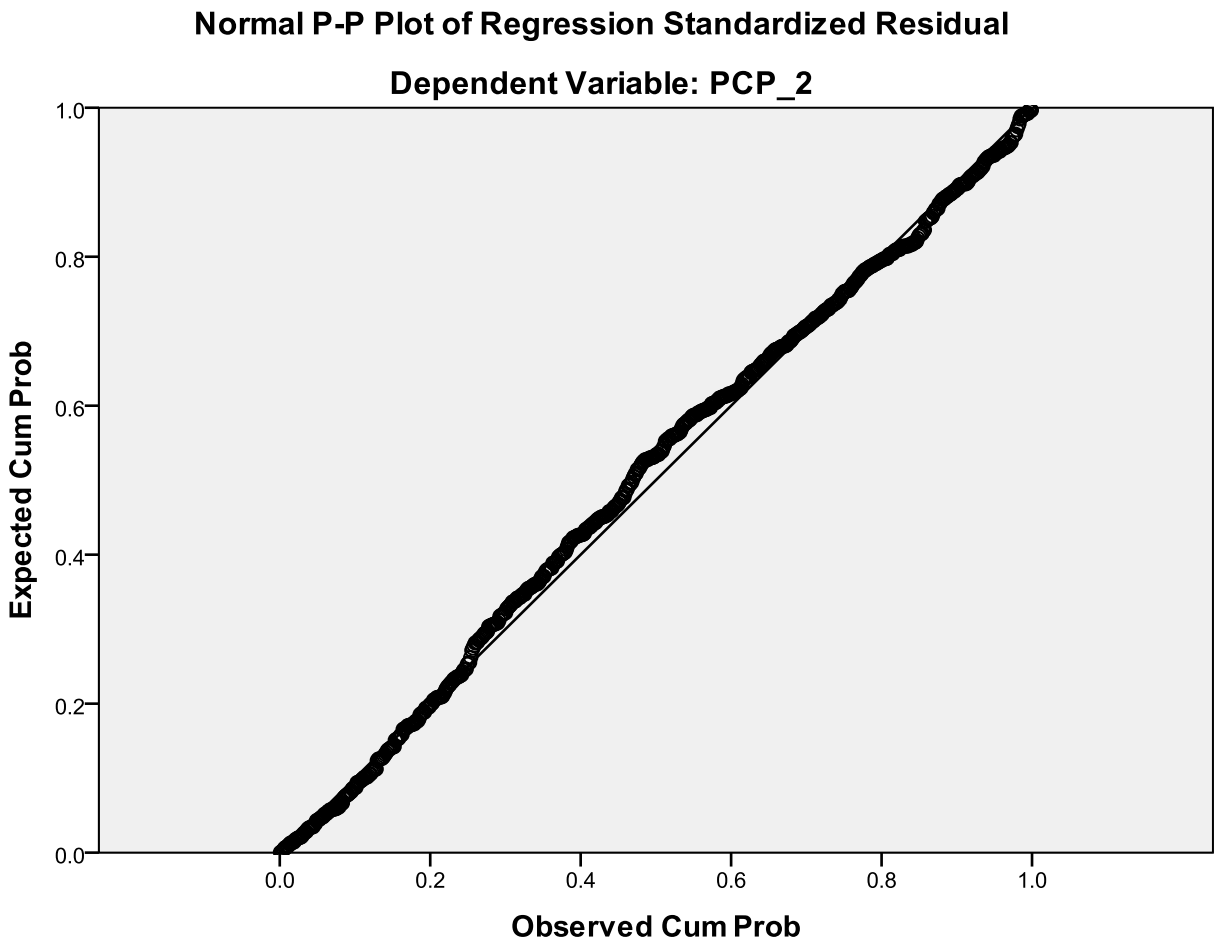

Appendix 13c: Linearity Test: F-Statistics

Model Summary[b]

Model	R	R Square	Adjusted R Square	Std. Error of the Estimate	Change Statistics					Durbin-Watson
					R Square Change	F Change	df1	df2	Sig. F Change	
1	.550[a]	.302	.294	.57438	.302	35.712	8	659	.000	1.882

a. Predictors: (Constant), PI_2, WL_2, CS_2, DI_2, JH_2, SL_2, OC_2, OR_2

b. Dependent Variable: PCP_2

Appendix 14: Collinearity Analysis

Appendix 14a: Collinearity Analysis: Tolerance and Variance Inflation Factor (VIF)

Coefficients[a]

Model		Unstandardized Coefficients		Standardized Coefficients	t	Sig.	Collinearity Statistics	
		B	Std. Error	Beta			Tolerance	VIF
1	(Constant)	3.207	.155		20.637	.000		
	JH_2	.206	.033	.300	6.174	.000	.447	2.235
	CS_2	-.034	.026	-.054	-1.314	.189	.617	1.620
	WL_2	.029	.023	.042	1.259	.208	.964	1.037
	OC_2	.024	.034	.037	.692	.489	.370	2.700
	SL_2	.060	.032	.095	1.879	.061	.412	2.428
	OR_2	.091	.039	.134	2.345	.019	.324	3.085
	PI_2	.057	.030	.095	1.919	.055	.432	2.317

a. Dependent Variable: PCP_2

Appendix 14b: Colliniearity Analysis: Condition Index

Collinearity Diagnostics[a]

Model	Dimension	Eigenvalue	Condition Index	Variance Proportions							
				(Constant)	JH_2	CS_2	WL_2	OC_2	SL_2	OR_2	PI_2
1	1	7.784	1.000	.00	.00	.00	.00	.00	.00	.00	.00
	2	.083	9.662	.03	.00	.15	.26	.01	.00	.00	.02
	3	.044	13.306	.01	.02	.77	.05	.03	.06	.01	.02
	4	.027	17.123	.02	.01	.02	.04	.02	.15	.00	.77
	5	.018	20.636	.09	.51	.01	.18	.07	.30	.03	.01
	6	.017	21.603	.09	.05	.00	.06	.69	.26	.08	.03
	7	.015	22.990	.67	.27	.06	.34	.17	.06	.00	.02
	8	.012	25.505	.07	.14	.00	.06	.01	.16	.88	.13

a. Dependent Variable: PCP_2

Appendix 14c: Collinearity: Durban Watson Auto Colliniearity

Model Summary[b]

Model	R	R Square	Adjusted R Square	Std. Error of the Estimate	Change Statistics					Durbin-Watson
					R Square Change	F Change	df1	Df2	Sig. F Change	
1	.550[a]	.302	.295	.57396	.302	40.867	7	660	.000	1.881

Appendix 15: Discriminant Validity (AVE) and Composite Reliability (CR) for Study Variables

			Estimate	S.E.	C.R.	P	B		
PI_2	<---	OEI	1				0.78	0.61	
OR_2	<---	OEI	0.983	0.04	24.874	***	0.87	0.76	
DI_2	<---	OEI	0.495	0.04	12.45	***	0.48	0.23	
SL_2	<---	OEI	0.963	0.044	22.045	***	0.80	0.64	
OC_2	<---	OEI	0.987	0.042	23.29	***	0.83	0.69	
CS_2	<---	OEI	0.756	0.046	16.396	***	0.62	0.38	
JH_2	<---	OEI	0.863	0.04	21.393	***	0.78	0.60	
							5.16	3.92	
						CR	0.74	0.56	AVE

			Estimate	S.E.	C.R.	P	β		
RE_2	<---	PCP	1				0.66	0.44	
OP_2	<---	PCP	0.924	0.071	13.103	***	0.63	0.40	
HO_2	<---	PCP	1.158	0.083	13.93	***	0.80	0.64	
EF_2	<---	PCP	0.895	0.075	11.854	***	0.58	0.34	
							2.67	1.81	
						CR	0.67	0.50	AVE

Calculated using a formula provided by Fornell and Larcker (1981)