

https://dspace.org/

SuperstructureBased Optimization of Membrane Gas Separation Processes A Review

Natsayi Chiwaye; Thokozani Majozi; M.O Daramola

https://hdl.handle.net/10539/46772
WOS

Downloaded from a DSpace repository. https://dspace.org/

I&EC research
Industrial & Engineering Chemistry Research

Open Access
This article is licensed under CC-BY 4.0

pubs.acs.org/IECR
Review

Superstructure-Based Optimization of Membrane Gas Separation Processes: A Review

Natsayi Chiwaye,* Thokozani Majozi, and Michael O. Daramola

Cite This: *Ind. Eng. Chem. Res.* 2025, 64, 13905−13919

Read Online
ACCESS | Metrics & More | Article Recommendations

ABSTRACT: Membrane technology for gas separation has apparent advantages such as compactness, ease of operation, and the possibility of incorporation into hybrid systems. This review analyzes the superstructure-based optimization models for membrane gas separation systems reported in the literature. The review describes and analyzes the membrane permeation models embedded in the optimization models and solution approaches, the superstructures presented, the objective functions adopted, and outcomes for different application cases. The progress is reported, and challenges and opportunities for future research are suggested. The presented review would be useful to researchers and engineers in membrane technology research and development and could lead to the deployment and adoption of membranes in various applicable industries, such as carbon capture.

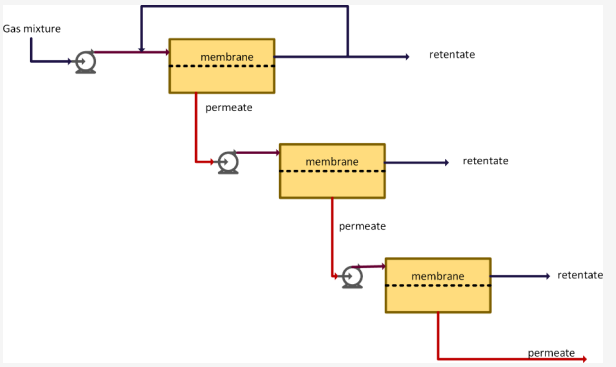

Downloaded via UNIV OF THE WITWATERSRAND on September 29, 2025 at 11:37:50 (UTC).
See https://pubs.acs.org/sharingguidelines for options on how to legitimately share published articles.

1. INTRODUCTION

Membrane gas separation has successfully been commercialized for hydrogen recovery, hydrocarbon recovery, natural gas purification, and production of enhanced nitrogen air.[1] This applies mainly to mixtures involving H_2, CO_2, N_2, CH_4, O_2, H_2O, H_2S, and light hydrocarbon gases. The advantages of membrane processes include simple process flowsheets and easy operational management.[2] Thus, the membrane gas separation industry was valued at about 1 billion USD in 2021 and is expected to grow in the coming years due to population increase, economic growth in the global south, and new membrane products and applications.[1,3] Some of the membrane gas separation operations in the research and development stage that can be commercialized in the future include olefin/paraffin separation and carbon capture.[1] Research interest has been in membranes for carbon capture in various capture technologies and mainly from power plants in a bid to tackle the global challenge of climate change.[4−6] Membrane-based post-combustion carbon capture has been studied, and the feasibility has been evaluated in techno-economic studies of carbon capture from flue gas from various processes, such as power plants, cement manufacture, and blast furnaces.[7,8] CO_2 is also separated in "biogas upgrading", where biomethane is produced while "CO_2 is captured" simultaneously.[9,10]

Gas separation by membranes involves separating a gaseous mixture using a permeable material that allows the passage of one gas component more readily than the other(s). The ease at which a gas component passes through the membrane is called permeability.[11] It is an intrinsic feature of the separating material. Polymer membranes dominate the commercial market, and optimization studies focus on these.[12] The "solution diffusion" mechanism of transport through a polymeric membrane is widely adopted in modeling studies and expressed in simpler terms in eq 1. Equation 1 shows that the flux (J_i), which is the rate of flow (F) of feed gas (i) in a membrane area (A) of permeability (ξ) and thickness (t) is proportional to the permeance (ξ/t) and the change in partial pressure on the feed side (also referred to as the retentate side)[21,64] and the permeate downstream side. It can also be deduced that the flux is inversely proportional to the membrane thickness. A thin membrane results in a higher flux. In eq 1, x represents the fraction of the gas in moles, and P is the operating pressure on the retentate side (r) and permeate side (d).

$$J_i = \frac{F_{i,r}}{A} = \frac{\xi_i}{t}(x_{i,r}P_r - x_{i,d}P_d) \quad (1)$$

The permeability (ξ) of a gas through a membrane is a product of the diffusivity and sorption.[12] The driving force is equal to

Received: September 29, 2024
Revised: April 10, 2025
Accepted: April 13, 2025
Published: July 2, 2025



ACS Publications
© 2025 The Authors. Published by American Chemical Society

https://doi.org/10.1021/acs.iecr.4c03693
Ind. Eng. Chem. Res. 2025, 64, 13905−13919

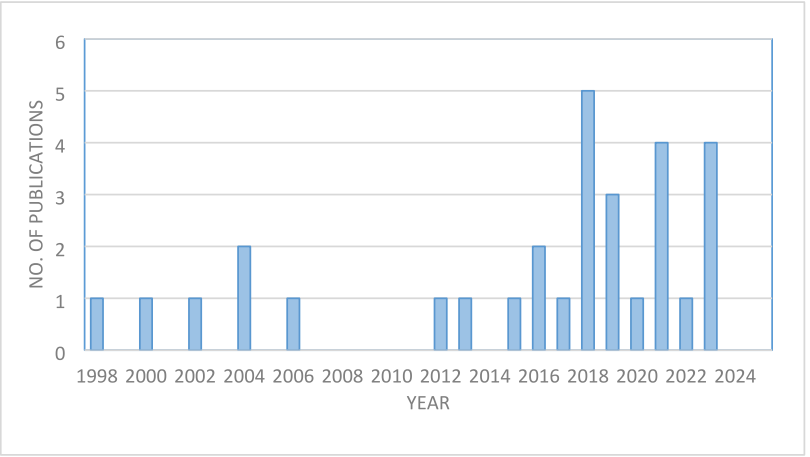

Figure 1. Publications on the superstructure optimization of gas separation membranes.

the partial pressure difference across the feed and permeate sides. Since the partial pressure difference drives the separation, a high concentration of the target gas in the feed mixture has an inherent driving force. The concentration of the target gas component can also be enhanced by recycle streams and cascading stages where an enriched stream is fed into a subsequent membrane stage, thus developing multistage membrane systems. An elevated operating pressure on the feed side is also advantageous; therefore, for streams at low pressure, feed gas compression generates a higher retentate operating pressure. The transmembrane partial pressure gradient can also be generated by creating a vacuum on the permeate side. A sweep gas reduces the target gas concentration in the permeate stream, enhancing the partial pressure difference.[13,14] The equation presented is adopted based on several assumptions, such as steady-state operations, ideal gas conditions, negligible concentration polarization, and negligible pressure drop. At a larger scale, these conditions may not hold[15,16] and the flux at the same operating temperature and pressure would be reduced.

Commercial gas separation by membranes came online in the 1980s. There are different commercial membranes available for gas separation membranes. Polymers are the most successful commercial membrane material used, because they are less expensive and easily pliable.[17,18] For instance, cellulose acetate is used for natural gas purification by removing CO_2. Other common polymers are polysulfone and polyamide, which have higher permeance and selectivity.[19] These polymers are used in hollow fibers that can be easily packed into permeators. Companies such as Air Liquide, Honeywell, and MTR produce commercial membranes for gas separation.[18,19] The majority of the permeators are hollow fibers, and a selected few are sold in spiral wound configurations. The challenges facing gas separation membranes include membrane stability over a wider range of temperatures and degradation due to chemicals.[18] Degradation leads to frequent membrane replacement to recover membrane flux and often necessitates pretreatment steps, making the process economically unfavorable.

Consideration in process synthesis and design is given to the membrane material, membrane thickness, permeator type, the number of permeators, membrane flow pattern, and how the driving force can be generated.[12,20] The main flow patterns considered are co-current, counter-current, and crossflow patterns.[21] A sweep gas is considered in the counter-current flow pattern setup.[14,22] The process flowsheet will include any, a combination, or all of these strategies to meet the separation targets, such as desired recovery and/or product stream purity.[23] Therefore, it is apparent that numerous combinations of these strategies arise in multistage membrane-based gas separation. From eq 1, it can be observed that, for a certain membrane thickness, a tradeoff in membrane gas separation exists between the membrane area and the driving force, which translates to energy consumption. Compression and vacuum operation results in higher operating costs as electricity drives the compressors. A larger membrane area can result in higher capital costs.[23]

A review study by Galizia et al.[1] reasoned that, even though an effort is being made to advance membrane production at a large scale, new and more efficient membranes will contribute only 5%−10% in reducing the gas processing cost. This is not significant overall, and, as a result, few, if any, new membranes have made a break into large-scale production and application in recent years. Membrane production companies have focused on improving membranes already on the market instead.[1] Advances in process systems engineering are essential to make gas separation by membranes competitive and lead to commercial application in areas that are at the pilot stage, such as carbon capture.[24] Genuine research interest in the area continues with simulation, techno-economic studies and optimization studies being reported.[25−27] The optimization of membrane gas separation processes can be applied to operating variables where the process flowsheet is determined prior to the optimization process.[28,29] Optimization of membrane gas systems involves predetermining the process flow and thereafter optimizing operating variables.[30] In the early work of Pettersen and Lien,[31] several multistage (three) membrane systems that involved recycling and reusing retentate and permeate streams were proposed by hand. A similar study on the heuristic determination of process flow was carried out,[32] and in the study, various two-stage and three-stage membrane-based systems with stream recycling in the process flowsheets were presented, and optimization was carried out. The model developed as a Nonlinear Program (NLP) was solved by the solver CONOPT in the General Algebraic Modeling System (GAMS). Variables that were optimized were the streamflow rates, area of the membrane, compressor duties, etc. The studies highlighted that permeate

https://doi.org/10.1021/acs.iecr.4c03693
Ind. Eng. Chem. Res. 2025, 64, 13905−13919

recycling would reduce the energy associated with compression. Similar studies have been reported.[28,33−35] An advanced approach would be to combine all these possible process flowsheets into one and develop a model that determines the optimum process flowsheet, this approach is the superstructure approach.[36]

A superstructure is a figure representation of feasible alternatives. In the solution process, the developed algorithm selects the optimum route based on the constraints and objective of the optimization.[37] Reactive distillation, water network synthesis, heat exchanger networks, and shale gas exploration are some of the processes where superstructure optimization approach has been used.[38−40] The objective of the superstructure approach is to simultaneously determine an optimum flowsheet and obtain the optimum operating variables. For a review of the superstructure-based process synthesis systems, the reader is referred to a technical review by Grossmann and coworkers.[37] The paper gives a timeline of the development of the framework for process optimization from the first presented superstructure in 1972 to the current building block-based representation. A comprehensive description of the various superstructure representations is discussed, and solution approaches are presented.[37]

As far as could be ascertained, a review study of superstructure-based membrane gas separation optimization has not been carried out. A comprehensive literature search was thus conducted using scientific databases such as Science Direct and the SCOPUS database to identify published materials on the subject matter, which included the topic of superstructure optimization of membrane-based gas separation. The review studies about thirty journal articles that used the superstructure approach for optimizing membrane-based gas systems. Figure 1 shows a renewed interest in recent years in the subject. The analysis includes the earliest study by Qi and Henson,[41] to the recent work by Yuyama and Kaneko.[42] The themes of interest that were identified included the membrane permeation model embedded in the superstructure-based optimization model. The superstructure description, including the components that synthesize the process, the type of problem, strategies for solving for numerical solution, the cost model, and the areas of application, were noted. In addition, challenges were identified and recommendations were suggested. The paper focuses on process design and variable optimization. However, other aspects, such as the process operation of membrane gas separation, have not been reviewed.

2. DEVELOPMENT OF OPTIMIZATION MODEL PROCESS

The optimization model includes the superstructure, the membrane separation model, recovery constraints, and often purity constraints; it also involves an objective function. A solution strategy is employed, whereby the mathematical approach is determined, the software the model will be implemented, and a solution approach is adopted (stochastic or deterministic). Figure 2 shows the steps involved from conceptualizing to finding a numerical solution. Table 1 lists the papers that present membrane gas separation superstructure-based optimization models.

2.1. Permeation Model. Commercial membranes are mainly polymer-based, and a desktop study of the progress of membrane materials is reported.[65] Polymeric membranes have been assumed to be used in the superstructure-based

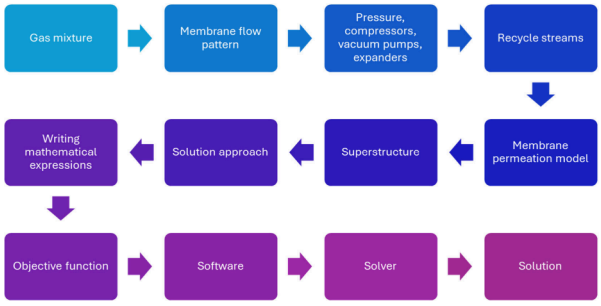

Figure 2. Steps and decision processes involved in superstructure-based optimization of the seperation of gas mixtures by membranes.

optimization of membrane gas separation. Consequently, the solution diffusion mechanism described in the previous section has been used to describe the mass transport from the retentate side to the permeate side of the membrane. The membrane is usually assumed to operate as a plug flow reactor, and thus, ordinary differential equations are used to describe the change in retentate flow rate with the membrane area.[21] Specific membrane permeator models have been incorporated into some studies.[43,52]

Qi and Henson,[41] based their optimization studies on the spiral wound module with a crossflow flow pattern. Early work on the development of a detailed multicomponent spiral wound permeator modeling showed that significant computational time was required,[66] and hence an approximate model that was solved in less than 1% of the time of the former was subsequently used in the superstructure-based optimization studies.[32,41,43] Runge−Kutta-Gill approximations were applied in solving differential equations that led to the membrane permeation model.

Other studies[21,67] appropriated an approximate method termed "compartmentalization", where the retentate side was a compartment, and the permeate side was another compartment operating at high and low pressure, respectively. These compartments were divided into subcompartments linking one another, and material balances were carried around each subcompartment, according to the flow pattern. The flux equation hence applies to a small area of the subcompartment, and it is summed to find the total area of the complete membrane stage. The compartmentalization model was later implemented[45] in the study of post-combustion capture by superstructure optimization. Another discretization approach was also adopted and implemented in MATLAB by Lee et al. in 2018[64] in their proposed "tank in series" model for a hollow fiber counter-current flow pattern.[68]

Finite difference methods were adopted in many studies as a way to implement the permeation models in algebraic modeling environments such as the General Algebraic modeling Systems (GAMS).[35,49,51,56] For instance, Arias et al.[49] and Mores et al.[51] considered the backward finite difference method. A similar approach was adopted[56] where a backward finite difference method was paired with the central difference method to discretise the ODE into algebraic forms. Gabrielli et al.[63] implemented the differential equations in MATLAB and used the solver ode15s, which is based on numerical differentiation formulas.[69] Finite element analysis was also adopted in other works.[53,54] Zarca et al.[53,54] described material transport in the hollow fibermembrane module by two differential equations for the flow rate of components both on the permeate side and the retentate side. The orthogonal

https://doi.org/10.1021/acs.iecr.4c03693
Ind. Eng. Chem. Res. 2025, 64, 13905−13919

Table 1. Studies Reporting Superstructure-Based Models for Membrane Gas Separation; Objectives, Solution Approach, and Software

Solution approach	Software	Permeance	Objective function	Reference
Deterministic	GAMS, MINLP	Given permeance	Minimize cost	41
	CONOPT2 and XA, DICOPT	Given permeance	Minimize cost	43
	NLP	Given permeance and Robeson correlation	Minimize cost	44
	GAMS, NLP	Given permeance	Minimize cost	45
	GAMS, BARON	Robeson correlation	Maximize profit	46
	GAMS, MINLP BARON	Robeson correlation	Minimize net present value	47
	GAMS, MINL, SBB	Given permeance	Minimize gas processing cost	48
	GAMS, NLP, CONOPT	Given permeance	Minimize cost	49, 35, 50, 51
	GAMS, NLP, CONOPT	Given permeance, Robeson correlation	Minimize cost	62
	AMPL, NLP, KNITRO	Given permeance	Minimize cost	7
	AMPL, MINLP, BARON and COUENNE.	Given permeance	Minimize cost	52
	GAMS, NLP, CONOPT	Given permeance	Minimize net present value	53
	GAMS, NLP, OQNLP & CONOPT	Variable permeance	Minimize net present value	54
	NLP, in house program, MIND based on KNITRO algorithm	Given permeance	Minimize cost	55
				55
	MINLP, GAMS, BARON	Variable permeance for fixed site carrier membrane	Minimize cost	56
	MINLP, GAMS, DICOPT	Given permeance	Minimize cost	57
	GAMS, BARON	Given permeance	Minimize energy	58
	GAMS, BARON, ANTIGONE	Given permeance	Minimize cost	59
	GAMS, SCIP 7.0	Given permeance	Minimize cost	60
	GAMS, SCIP 7.0	Given permeance	Minimize cost	27
	Aspen, sequential quadratic programming	Given permeance	Minimize cost	61
Stochastic	Simulated annealing, NEQLU solver.41	Given permeance	Minimize cost	21
				21
	MATLAB Genetic algorithm (GA)	Robeson correlation	Multiobjective optimization problem specific energy and membrane minimization	63
	MATLAB Genetic algorithm (GA)	Commercial membrane and Robeson correlation	Minimize cost inclusive of penalty function	64
	Bayesian optimization	Variable, predicted permeance		42

collocation method was implemented on the finite element analysis approach that was used.

The Robeson correlation was also used to simultaneously predict the optimal membrane permeance and selectivity in superstructure-based optimization as a way to guide further membrane development.[44,47,64,70,71] Robeson[70,71] illustrated the relationship between selectivity and permeability by plotting the logarithms of the separation factor and the permeability of the more-permeant gas for various gas mixtures. The result was a boundary for the permeability and selectivity that existing membranes could achieve. A resulting mathematical relation was established for this boundary, which showed that the permeability (ξ) of a component (i) was equal to a product of a constant (k) and its selectivity (s) over another component (j) raised to an exponential factor n, which is the gradient of the boundary line, as depicted in eq 2.

$$\xi_i = k s_{i,j}^{n} \tag{2}$$

As part of a study,[64] permeance and selectivity were assumed to be variables that could be nonuniform in the different stages, thus informing the characteristics of the membrane that would give the optimum flowsheet and cost. Lee et al.[64] showed that membranes of different selectivity in different stages would be economical in CO_2 capture from coal-fired power plant flue gas. Recently, Taifan and Maravelias[27] also presented a model that sought to optimize the membrane properties based on the Robeson upper bound plot relation.

Optimization studies that incorporated facilitated transport permeation models have also been reported.[54,56] While Chiwaye et al.[56] included a fixed-site carrier-based model, the model presented by Zarca et al.[54] incorporated a basic solution diffusion model, fixed-site carrier, and mobile carrier transport models developed from and validated by preceding experimental work.[72] The detailed permeation model enabled the optimization of the carrier load to simultaneously optimize the permeability and selectivity of the membrane, as well as the membrane network from limited process options. A detailed review of facilitated transport models in membrane separation was given by Rea et al.[73]

Gilassi et al.[52] included the optimization of the hollow fiber membrane parameters by allowing the number of fibers and their length to be optimization variables. When the optimum membrane area has been determined by computing fiber number and length, the second step involves the optimization of gas flow rates into the permeator and the packing fraction based on the initial results. Discrete variables were thus incorporated into the permeation model as integers, denoting the number of modules required, adding complexity to the model. A model with more discrete variables is usually more difficult to solve and results in increased computational

https://doi.org/10.1021/acs.iecr.4c03693
Ind. Eng. Chem. Res. 2025, 64, 13905−13919

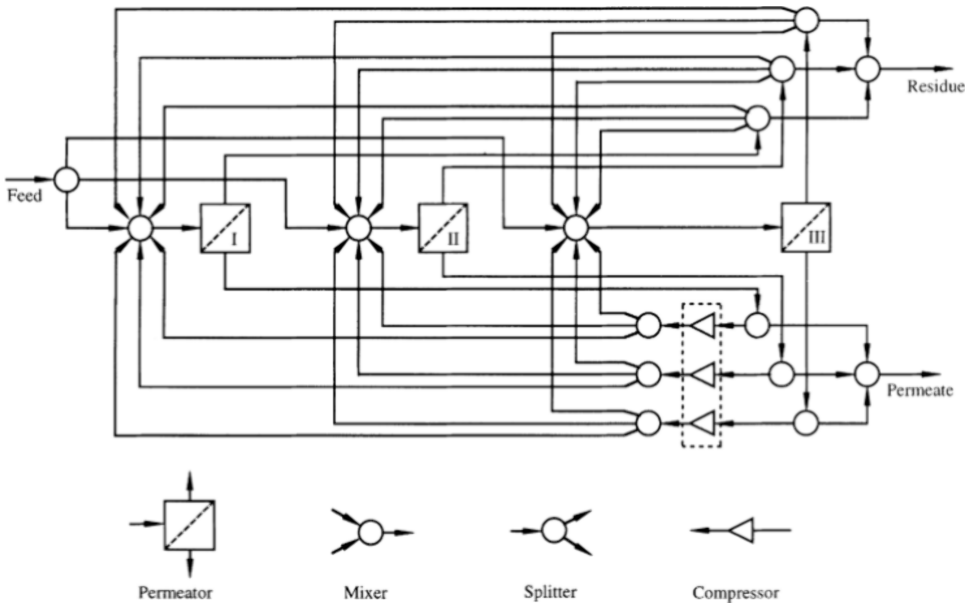

Figure 3. Superstructure presented for multistage membrane optimization by Qi and Henson.[32] [Reproduced with permission from ref 41. Copyright 1998, Elsevier.]

times[74,75] due to the solution space being noncontinuous and the increase in options that have to be solved. Gilassi et al.[52] employed a "partial stage cut" model developed in a previous study for hollow fiber membranes. In the study, the superstructure-based model would simultaneously determine the optimal number of modules and their optimum size, in addition to the membrane stages.[76]

The membrane configuration and flow pattern are usually set beforehand and assumed to be crossflow, co-current,[45,63] or counter-current.[52,56,64] The overall mass balance around the permeator reflects the flow pattern and forms the membrane permeation model. The choice of flow pattern in the membrane permeator was one of the degrees of freedom in a few studies. Uppaluri et al.[21] presented a superstructure-based model that allowed the selection of any of these three patterns. The counter-current flow pattern favored lower gas process cost; however, the differences in cost were low for the different flow patterns. In a unique contribution, Velasco et al.[58] presented a "unified" permeation model that applies to gas and liquid membrane separation.

Assumptions are generally made to reduce the complexity of the superstructure models and allow finding a solution in reasonable computational time. The common assumptions made concerning gas permeation in membranes include the assumption that the gas mixture exhibits ideal gas behavior and that the process is considered a steady-state operation. Concerning permeation, the permeance of each gas is usually assumed to be independent of the other and is not affected by changes in pressure and concentration. However, in facilitated transport, this assumption is automatically dropped.[56] Concentration polarization was assumed to be insignificant in all the superstructure-based optimization studies. Concentration polarization refers to the buildup of the less-permeate component on the membrane as a result of the more-permeate component having permeated and leaving the less-permeable species to create a layer that impedes the transfer of the more-permeable component and limits its access to the membrane surface.[77−79] A majority of studies considered negligible pressure drop[7,35,51,52,80] for simplification. Some studies included Hagen−Poiseuille expression to capture the loss of pressure on the permeate side only.[43,64,81] A rigorous model to account for pressure drop in spiral wound permeators was incorporated in the multistage membrane separation optimization model for CH_4/CO_2 separation by Datta and Sen.[82] Some of these assumptions have been shown not to be practical as pilot studies or more-accurate modeling has indicated that the contributions of the parameters are significant. Pressure drop has been noted in field trials.[83] In some pilot studies, concentration polarization was observed for membrane separation of dry flue gas.[15,84]

2.2. Superstructure Evolution. Central to the superstructure-based optimization of membrane-based gas separation is the superstructure. Figure 3 shows the superstructure presented early for gas separation by membranes. It depicts a process synthesis framework for simultaneously determining the optimum process flowsheet and optimum operating conditions for membrane-based gas separation.[41]

The superstructure presented[41] shows feed that can be fed to any of the membrane stages and retentate and recycle streams that can also be sent to any of the membrane stages for further separation. Material balances are carried out around the mixers and splitters present, as well as around the membrane. The product can be collected from the retentate side or the permeate side, depending on the specifications of the system. The stream fed to the retentate side of the membrane is compressed. A cross-flow spiral wound permeation model was incorporated, and the membrane elements were considered discrete with a fixed area size. Binary variables also denoted the existence or nonexistence of process units and process stream connections. A binary gas was considered, and the problem was formulated as a MINLP. The model was applied, and the benefits were demonstrated in studies of enhanced oil recovery (in CO_2/CH_4) operations and natural gas treatment where CO_2 concentration should be reduced to lower than 2%. A follow-up study was later published, which considered a multicomponent gas mixture based on the superstructure.[43] The model involved a high-pressure feed gas, which needed no compression, and the feed pressure was uniform in all the

https://doi.org/10.1021/acs.iecr.4c03693
Ind. Eng. Chem. Res. 2025, 64, 13905−13919

stages. Several superstructures have been developed based on this framework with various modifications for the optimization of various applications such as CO_2 capture from flue gas.[7,52,81] Adding more capabilities[21,67] presented an extended superstructure that allowed recycle of the sum of permeate streams and the sum of retentate streams to any of the membrane stages and included vacuum pumping on the permeate side (Figure 6a, presented later in this work). In the development of the model, the feed side was referred to as a high-pressure state, and the permeate side as a low-pressure state. The membrane stage was considered to be a compartment of the model, and the membrane profile was represented as subcompartments. Lee et al.[64] extended the superstructure presented by Qi and Henson[41] to include "pressure controllers", which included expanders on the retentate streams to enable reduction of pressure of a preceding stream to match the pressure of the destination stream. The superstructure also included compression and vacuum operation.

An earlier superstructure-based optimization model for membrane gas separation was also presented in 1998,[85] where the state-space approach previously presented for reverse osmosis networks[86] was adopted. The MINLP developed was applied to a "hybrid gas membrane condensation system".[85] The approach was also later adopted and applied to superstructure-based optimization of gas separation of methane by a membrane.[46,47] The superstructure is presented in Figure 4 and shows the stream distribution box and matching box. In the representation, the distribution box comprises units such as membrane separation, splitters, mixers, compressors, and vacuum pumps. The search space can be reduced by prohibiting some connections that are obviously not beneficial to enable easy computation of the solution. For example, the mixing of product retentate and final permeate product stream can be forbidden, and the recycling of streams to the stage of origin can also be excluded. Additionally, expansion cannot succeed compression as efficiency losses will be incurred.[85] The superstructure enabled the use of both N_2 and CH_4 selective membranes in a hybrid system for CH_4 purification system, which demonstrated that such systems are most cost-effective.[47]

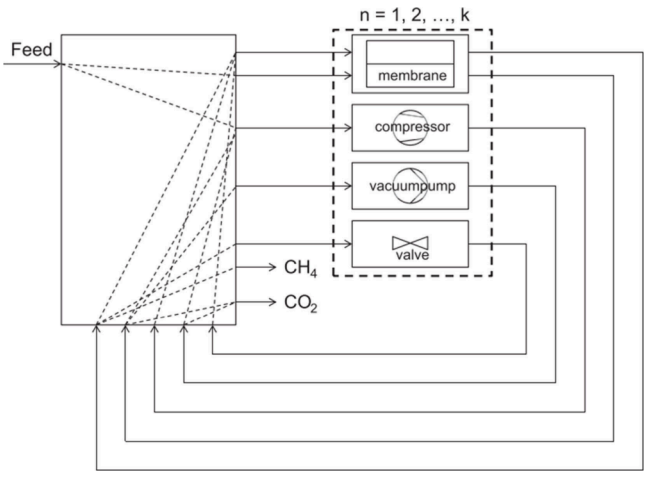

Figure 4. State-space approach applied to membrane gas separation systems presented by Scholz et al.[46] [Reproduced with permission from ref 46. Copyright 2015, Elsevier.]

A complex superstructure made of two networks, a module network and a membrane stages network, was devised by Kookos.[44] Simplified cascading stages were also proposed, instead of an all-inclusive network superstructure. This is necessitated by the fact that high-pressure operations such as natural gas sweetening do not require feed compression, whereas low-pressure operations such as the separation of flue gas for CO_2 capture entail feed compression to enhance the driving force. A simplified superstructure with cascading membrane stages had also been adopted earlier for CO_2 capture from coal-fired power plants flue gas.[45] Aliaga-Vicente et al.[48] suggested two superstructures for low-feed-pressure gas and for high-feed-pressure gas to be separated. The superstructures with two distinct regions of cascading stripping and cascading enriching sections also included the possibility of using the permeate from one stage to be a sweep in the proceeding stage. Figure 5 elaborates on the design. The feed is not split and is only fed to the first stage of the stripping stage. The cascading superstructure was also proposed to avoid the complications that are brought by the "full connectivity approach".[63] The authors sought to establish attainable regions for gas separation membrane systems. In the most complex framework presented, recirculation of permeate streams to previous membrane stages was allowed after compression, while the retentate was sent to the next membrane stage. When attainable regions for the enrichment and stripping models were compared, the scenario with permeate recirculation had wide attainable regions and was the scenario that could achieve recovery of 90% CO_2 recovery and product purity of 95%.

A similar nonexhaustive connections approach was devised to reduce complexity and computational effort in multistage gas membrane superstructure-based optimization. A four-membrane-stage superstructure was proposed where two permeators were fixed, and if required, a third and fourth stage will become operational.[49] The feed was always fed to the first stage, and the permeate was compressed to match the

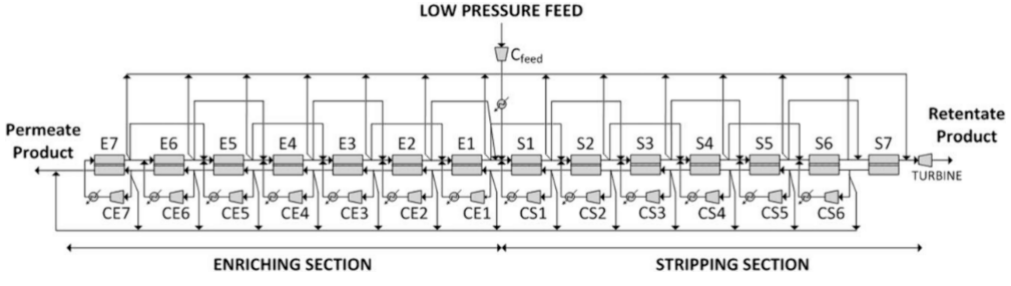

Figure 5. Cascading superstructure presented by Aliaga-Vicente et al.[48] [Reproduced with permission from ref 48. Copyright 2017, John Wiley and Sons.]

https://doi.org/10.1021/acs.iecr.4c03693
Ind. Eng. Chem. Res. 2025, 64, 13905−13919

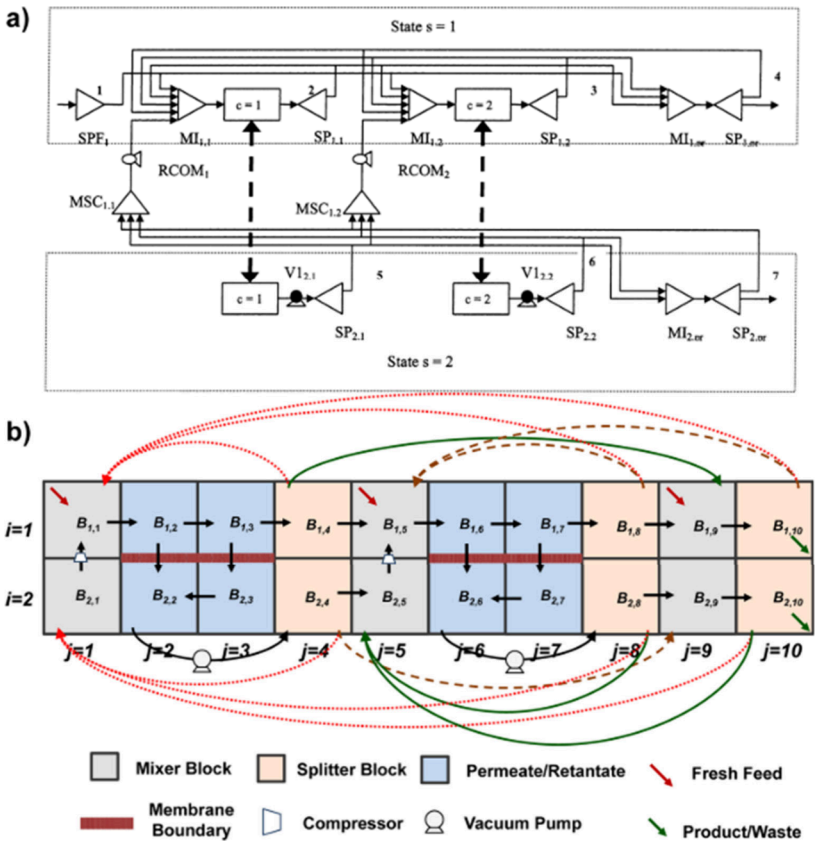

Figure 6. Building block representation of a gas separation membrane superstructure previously presented in the literature: (a) Uppaluri et al.[21] and (b) Demirel et al.[59] [Panel (a) has been reproduced with permission from ref 21. Copyright 2004, American Chemical Society, Washington, DC. Panel (b) has been reproduced with permission from ref 59. Copyright 2021, American Chemical Society, Washington, DC.]

subsequent membrane operating pressure. Both the retentate and permeate−recycle streams from the other membrane stages were enabled to feed into this first stage. Atmospheric pressure was considered on the permeate, as there was no vacuum operation on the permeate side. Recovery of energy by a turbine located at the residue end was possible. A follow-up study based on the superstructure incorporated vacuum operation[51] and the results showed that the cost of CO_2 capture was reduced by allowing the permeate operating pressure to be optimized. Zamarripa et al.[87] adopted the approach and had some of the six maximum membrane stages fixed. The membrane network was integrated with a coal power plant's process flow sheet.

The most recent approach in process intensification was presented by Demirel and coauthors.[88] The approach is characterized by "fundamental building blocks", where a block can be any possible operation unit. In a single block, operations such as mixing, reaction, and separation occur, and these can be filled blocks with catalysts. Materials can flow across the block boundary, which can be defined as free-flowing, slightly restrained, or restrained, for example, in the case of membranes. Process intensification and synthesis are achieved by developing a mathematical programming optimization model based on the building blocks arranged side by side. The result is an optimum process flowchart that provides optimized operating parameters.

Membrane separation can be represented by two blocks, one of which can represent the retentate side and the other representing the retentate side. Demirel et al.[59] presented how a gas membrane superstructure such as that previously presented[21] (Figure 6a) could be captured by a building blocks representation (Figure 6b).

Figure 6 shows the green and red lines representing the flow of streams such as feed, retentate, and permeate streams from source blocks to possible destination blocks. The membrane is located at the block boundary where flow is from the retentate block and passes onto the permeate block. The mixers and splitters are stated as blocks. As the figure shows, the permeate can flow and be mixed within the mixer block, which is then mixed with the feed in another block. The figure shows the counter-current configuration, and by changing the direction of the arrows, the crossflow or co-current configuration can easily be represented and thus incorporated into the model. In the model presented, the flow pattern can thus be automatically determined from the three options embedded in the model.[59] Equipment such as pumps and vacuums is also modeled in the model. In the process, the process routes depicted by refs 21 and 67 are captured in this approach. The results showed improved results.

2.3. The Objective Function. The objective function is the key point of any optimization.[89] Objective functions based on economics are desirable since the business exists to make a profit. Single cost-based objective functions are dominating in the reviewed pool. The objective is usually determined for a set of recovery and purity targets of product streams. The objective has been to minimize gas processing cost, total annual cost,[21,45,67] specific cost,[7,44,52,64] net present value[53,54] and maximizing profit.[46,47] In another study, minimizing energy was the objective.[58] While many were single-objective problems, multiobjective problems were also presented.[63,82,87]

https://doi.org/10.1021/acs.iecr.4c03693
Ind. Eng. Chem. Res. 2025, 64, 13905−13919

The variation of the cost of electricity against the rate of capture of CO_2 was explored and presented in a Pareto front.[87] In determining these economics-based objective functions, the capital costs and operational costs must be computed. Since the optimum flow sheet is dependent on the cost model, to understand the membrane process without the influence of the cost parameters, Gabrielli et al.[63] carried out multiobjective optimization. Energy consumption and specific membrane areas were minimized simultaneously in this multiobjective analysis.

Penalty functions can also be added to objective functions to allow analysis of solutions that do not achieve the separation targets set.[21,64] A universal separation index (Rony Index) applicable to all chemical separation processes[90,91] was also adopted as the objective in superstructure-based membrane gas separation.[44]

2.3.1. Cost Models Embedded in Optimization Models. The cost model has an impact on the results of the optimization, such as the flow sheet, energy, and membrane area. A majority of the studies considered minimizing the total annualized cost as the objective function. The total annualized cost is the sum of the capital and operating expenditure. The project life is assumed, the cost of purchase and installation of the equipment is also considered, and interest rates are taken into account in determining the capital costs. From the computed total capital costs, annualized capital costs are thus determined and presented. Operating costs are computed from energy consumed in running compressors and vacuum operation over a period of time, and in some instances, the cost of cooling water was considered.[45] It was reported that the capital recovery factor had the greatest impact on the total annualized factor.[51] The cost of equipment will have an influence on the outcome of optimization and determine the energy consumption of the system and the size of the membrane size. If the membrane is expensive, then a smaller membrane area is preferable, as it is traded with huge power consumption. A large membrane area would have a greater impact on the capital costs.

2.4. Solving Optimization Models for Gas Membrane Networks. Superstructure-based optimization problems are complex and difficult to solve; both deterministic and stochastic methods were used to obtain numerical solutions. It is apparent from Table 1 that the deterministic approach is popular, as about 80% of the researchers utilized this method. GAMS has been used extensively as the modeling platform of choice and, to a minor extent (A Mathematical Programming Language) AMPL.[92] The optimization models developed are nonlinear, and hence, NLP problems are formulated. MINLP models are presented in models that denote the existence of process streams and pieces of equipment with binary variables, and integer variables are included in determining the number of module fibers in a hollow fiber membrane. Solvers and algorithms accessed within GAMS, for instance, BARON, CONOPT, and DICOPT (CONOPT, XA, CPLEX) were selected in several studies. The problems are difficult to solve due to nonlinearity, and being nonconvex pauses the challenge of missing the global optimum and settling on the local optimum instead. Initializing with different starting points and setting bounds on variables has been reported as a strategy to improve the chance of finding better solutions when local solvers are utilized.[43,52] Such strategies also lead to short computational times (few seconds).[43,53,54] Global optimality therefore cannot be proven in many instances. A study revealed that the use of local solvers such as CONOPT could give suboptimal solutions (Velasco et al.[58]). For instance, the solution found by CONOPT showed the energy consumption that was about four times higher compared to the energy consumption from the solution provided by the global solver, BARON (Velasco et al.[58]). In an attempt to address this challenge, Velasco et al.[58] detailed how to ensure that the global solution is not excluded and how to remove infeasibilities when MINLPs are solved by the branch and reduce algorithm, BARON. It was highlighted that applying bounds on all nonlinear term variables was essential to ensure that the global solution is reached. Disaggregation of logarithm terms was also necessary to hasten BARON to finding a solution. Recent developments to use other solvers such as ANTIGONE, SCIP, and COUNNE are welcome.[27,52] Several thorough reviews on solvers are available.[93,94] The GAMS website highlighted the progress that had been made in solving MINLP and mentioned the improvements in the BARON performance. The update by Stefan Mann in 2022[95] on the GAMS website indicated that BARON was able to solve more problems and faster than it did in 2015. BARON is desirable to users that implement problems in GAMS because it is a global solver that does not require an initial value solution close to the optimum to initiate. However, BARON is often more computationally demanding. The use of MINLP solvers such as BARON and ANTIGONE is favorable to users who are not familiar with decomposition techniques, as may be the case for people interested in membrane gas separation. These solvers have the advantage of being able to handle many more problems. The use of bender decomposition may be computationally more efficient if the problem is structured and can be easily rewritten into a problem.[94,96] Several reports report the robustness of BARON finding solutions and solving complex problems in a shorter time than the other solvers. The use of general benders decomposition would require more iterations to solve a problem.[94,96] Few attempts have been made to rewrite models in structures that may allow for bender decomposition algorithms. Recent progress has taken the direction of developing models and formulating surrogate models to make solving models easier.

When the objective of the optimization is related to cost, a number of constraints and variables in the model are related to pressure, such as the cost of compressors, expanders, vacuum pumps; in addition, membrane area, feed flow rate, and retentate flow rate are considered. The pressure becomes a complicating variable in the optimization problem, impacting the flux and equipment duties. Setting a target pressure range through a prescreening exercise that precedes optimization would simplify and narrow the search space.[67] A sequential approach to ensuring global solutions can be affected.[50] The optimization is initially carried out where the sum of membrane area is minimized, and then a second optimization run has the minimization of energy as the objective function. The two runs give the lower and upper bounds of variables, which will be set in a final optimization run where the annual cost of capture is made the objective function. A smaller search space is thus created by the set bounds, which should shorten the computational time. The approach is rooted in the tradeoff between energy and size of membrane area, where minimizing these should provide the minimum value and maximum values of the variables. A further benefit of this approach is that the initial optimization runs provide feasible solutions, which can be used as starting points for the final optimization.

https://doi.org/10.1021/acs.iecr.4c03693
Ind. Eng. Chem. Res. 2025, 64, 13905−13919

Stochastic methods are a useful solution strategy for solving superstructure-based membrane-based gas separation. Uppaluri et al.[21,67] applied a simulated annealing algorithm that was applied to determine the optimal membrane network and optimum operating conditions. Genetic algorithms have also been adopted for solving superstructure-based optimization models[63,64] as examples of stochastic methods application. The benefits of genetic algorithms include better handling of discrete variables, increased chance of finding global solutions and ease handling of discontinuous functions.[97] Lee et al.[64] used a genetic algorithm solver in MATLAB to obtain a numerical solution to a two and three-stage superstructure-based problem for separating CO_2 from N_2. Similarly, Shafiee et al.[98] applied the genetic algorithm approach in MATLAB to solving a three-stage membrane superstructure problem for optimizing CO_2 capture in a flow sheet that was automatically connected to Aspen Plus for easy computation of cryogenic conditions. The use of genetic algorithms may pause the challenge of high computational times.[99]

3. FIELDS OF APPLICATION

Superstructures may be developed as frameworks for general application and then applied to various case studies to showcase the benefits; however, recently, the superstructures developed have been tailor-made for specific gas separations. For instance, some frameworks for post-combustion CO_2 capture include product compressors. The areas of application analyzed include hydrogen recovery, natural gas treatment, carbon capture, biogas upgrading, and enhanced air production, among others. It was found that superstructure-based optimization was vital as it reduced the cost of membrane gas separation, compared to simulation results, based on the process flow sheets determined earlier by hand.[49,56] For instance, a 14% reduction in the total annualized costs was noted when a superstructure-based model was applied to CO_2 capture, compared to a two-stage process.[49]

3.1. Hydrogen Recovery. A case study of separating syngas to produce high-purity, high-pressure 99% H_2 on the retentate side was considered to analyze the impact of the choice of flow pattern. Though the counter-current flow pattern resulted in the lowest cost of separation, the difference was small for the results realized for the co-current and crossflow patterns.[21] A single stage could not achieve 99% pure hydrogen and a recovery of 95% when H_2 was recovered from CH_4-laden refinery streams. The compressor cost contributed 20% to the system cost.

3.2. Air Enrichment. Kookos[44] showed that increasing the nitrogen stream from 95% to 99% would double the annualized cost of the membrane system in nitrogen-enhanced air production. Since the Robeson upper bound relation was used, it was predicted that membranes of higher permeance and lower selectivity than the membranes available at that time would meet the high-purity nitrogen-enhanced air. Optimization of the feed flow rate of the gas mixture is important, and separation targets can be met at low cost, as observed in the optimization of membrane network producing oxygen-enriched air.[21]

3.3. Natural Gas Treatments. Separation of gas mixtures containing natural gas is an important field of membrane application. The goal is to meet pipeline transportation and grid compatibility specifications.[100] In the gas separation operation, the concentration of natural gas is enhanced. The membranes used can be selective for either CH_4 or contaminant gases. Suitable membranes for the application are discussed in detail.[100] The separation by membranes involves removing CO_2, nitrogen, hydrocarbons, and H_2S.[12] The separation of the CO_2/CH_4 mixture is also carried out in enhanced oil recovery. CO_2 is injected into the oil well, and the CH_4 produced thus has a high concentration of CO_2. A similar process is the removal of CO_2 from a CH_4 mixture that has been of interest in biogas upgrading as a carbon capture technology. Superstructure-based optimization models have been applied to CH_4 mixture gases.

An MINLP superstructure-based model was formulated and applied to natural gas treatment and enhanced oil recovery initially to separate a binary gas mixture of CO_2/CH_4 and, later, a four-component gas mixture.[41,43] The goal was to reduce the CO_2 concentration to less than 2% from about 20%. Retentate and permeate recycle streams were enabled, and operating pressure was a variable that was optimized when the objective was to minimize process cost. The results showed that a four-stage membrane process was more economical than a three-stage. It was also consistently observed that optimization of membrane area as a continuous variable resulted in a lower cost than summing elemental membrane units of a fixed area size. Although differences were noted in optimum operating conditions for binary gas mixture and multicomponent gas mixture, the optimal flowsheet did not vary.

3.4. Post-Combustion CO_2 Capture. While the earliest models developed for gas separation by membranes were applied to enhanced air separation and purification of natural gas, more superstructure models have been developed specifically for CO_2 capture. Much work has been carried out on optimizing the separation process of CO_2 from flue gas for CO_2 capture since reducing carbon emissions is one of the significant challenges that need to be tackled currently.[7,45,49,51,64] A thorough review of the process systems engineering approach to carbon capture utilization and storage was carried out recently by Hasan et al.[24] Traditionally, membranes have been applied in the separation of gas mixtures at high pressure and high concentrations of target component. Post-combustion CO_2 capture thus requires more innovation and ingenious process routes to make it economically feasible since the flue gas is delivered to the membrane plant at low pressure and low CO_2 concentration. The challenge that membrane-based CO_2 separation from flue gas from coal-fired power plants faces is low driving force.[101] This necessitates an even higher pressure ratio to be in effect, of which the possible pressure ratio could be limited by the membrane mechanical properties and prohibitive economics. Huang et al.[102] argued that the pressure ratio that can be effected maybe limited, despite a large membrane permeance.

Superstructure-based optimization indicated that increasing the recovery rate increased the cost of CO_2 capture exponentially.[64] The results also showed that the optimum membrane stages were dependent on the superstructure. For instance, in the study by Gabrielli et al.[63] the optimum membrane stages were found to be three and optimization based on a higher number of stages did not improve the results. However, studies based on a different superstructure found four stages to be optimal.[49,51] The use of water vapor as sweep gas would result in a lower membrane area that is, however, traded with higher energy consumption and results in a minimal savings in cost (~1%).[56] Optimizing both the retentate and permeate pressure and allowing nonuniform

https://doi.org/10.1021/acs.iecr.4c03693
Ind. Eng. Chem. Res. 2025, 64, 13905−13919

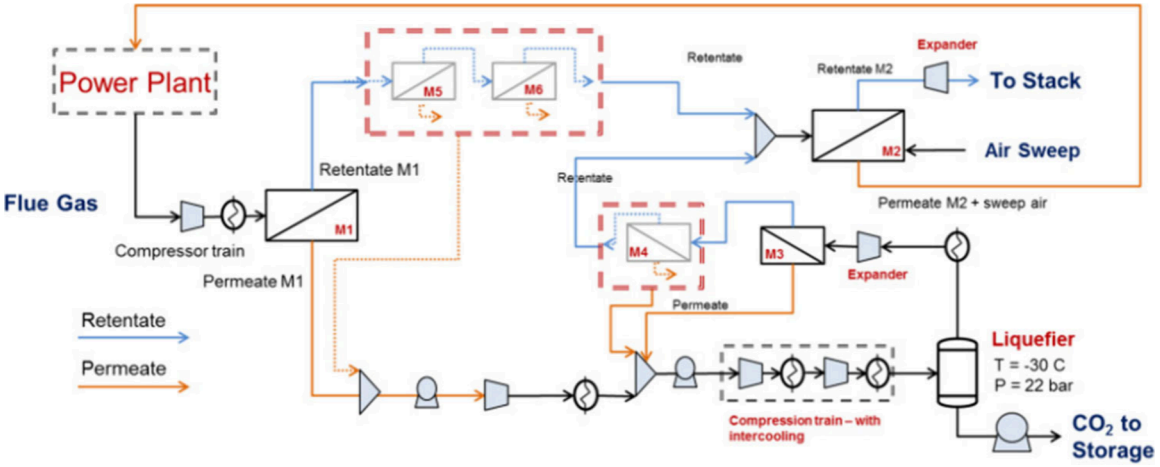

Figure 7. Membrane network superstructure for CO_2 capture from power plant inclusive of a liquefier and integrated with the power plant.[87] [Reproduced with permission from ref 87. Copyright 2018, Elsevier.]

pressure values in different membrane stages resulted in efficient energy consumption and reduced specific cost of capture and the CO_2 avoided.[56] Superstructure-based optimization studies of carbon capture from wet cement flue gas showed that the cost of capture is about 1.5 times the cost of CO_2 capture computed when a dry two-component flue gas was considered.[62] The results allude to the importance of developing models that are close to real conditions.

3.4.1. Unique Aspects of Minor Components from Flue Gas from Coal-Fired Power Plants. The other aspect to consider in modeling CO_2 capture from membrane flue gas is that the gas mixture contains about 10% water.[103] Water in the gas mixture increases the complexity of the optimization model, because condensation of the water in the membrane modules must be accounted for. Additionally, water has high permeance in the polymer membranes that are used to capture CO_2. Many studies[49,51,64] simplified the problem by assuming a binary gas mixture of major components N_2 and CO_2 since nitrogen comprises about 70% of the flue gas produced in the combustion of coal in the boiler of a coal-fired power plant. Hasan et al.[45] faced this challenge head-on by including a superstructure that involved several options of dehydration that could reduce the water in the feed gas to 0.1%. The model was solved initially, and the optimum dehydration system solution was adopted as the choice of cooling in the multistage superstructure dedicated to determining the membrane network for the CO_2-enriched product stream. The superstructure showed possible dehydration routes such as compression and cooling, triethylene glycol (TEG) absorption, membrane dehydration, and refrigeration. For flue gases with different water concentrations (5.5%−15%), the results indicated that TEG was the most economical to dehydrate the flue gas to 0.001 mole fraction.

Humidified flue gas has been considered; however, the process involved a cooling stage, where water was removed in a cooling stage to about 3% under atmospheric conditions.[56] It would be interesting to combine the dehydration superstructure and membrane superstructure to form a single integrated superstructure to simultaneously determine the dehydration technology of the flue gas, the optimum water concentration in the feed stream, and the optimum membrane network. A study by Arias et al.[62] determined how assuming a binary flue gas impacts the optimization results compared to optimizing based on multicomponent humidified flue gas from the cement manufacturing. The result showed that additional costs were incurred compared to processing dry flue gas. Additional constraints are required to ensure that condensation does not occur in the membrane module, and thus, additional process equipment, such as coolers and condensers, is added to the superstructure. A pilot scale study carried out by Scholes et al.[104] showed that the concentration of water in the flue gas impacted negatively on the permeance and selectivity, possibly due to concentration polarization;[104] thus, polarization may have to be considered in the permeation model for more realistic optimization model results.

In a similar regard, minor components, such as SO_2 and NO_x that are present in the flue gas have been assumed to have negligible effects and have not been accounted for in optimization studies. Experimental work showed that these minor components[105] have an impact on the permeance of CO_2 and, at the least, reduce CO_2 permeance. Similar results were demonstrated in an experimental and simulation study.[106] The observation was that the permeance decreased by 17.7% when an SO_2-free gas was used compared to a gas with 5000 ppm of SO_2. It was also reported that SO_2 would have a minimum impact on the CO_2 separation by fixed site carrier membranes as the transport of CO_2 was facilitated by a different mechanism, and thus competitive adsorption was not at play. It is thus necessary that future studies consider these minor components in their studies to bring optimization results closer to a more practical scenario.

In the capture of CO_2 from flue gas, superstructure optimization has been reported to reduce cost and membrane area compared to a predetermined process flow sheet. In another study,[49] multistage optimization decreased costs by 12%, energy by 6.3% and membrane size required by 7.8%. It was noted in the study of Arias et al.[49] that the superstructure-based solution and cost of capture were higher than the computed cost for an integrated coal and membrane system. The two-membrane-stage simulation study that involved air sweep and the CO_2-enhanced air fed to the boiler achieved the lowest costs and higher CO_2 purity. Thus, it would be interesting to include air sweep in the superstructure targeted for CO_2 capture from flue gas from power plants, as presented in the previous techno-economic study.[22] To close this gap,[87] a model was developed that incorporated the power plant in

https://doi.org/10.1021/acs.iecr.4c03693
Ind. Eng. Chem. Res. 2025, 64, 13905−13919

conjunction with six stages of membranes, as depicted in Figure 7. Initially, the flue gas is fed to a fixed first stage, and the retentate is fed to the first of two stages (not fixed) of membranes, from which the permeate from these cascading stages combines with the permeate from the first stage. The output is compressed, cooled, and sent for liquefication. The gases from the liquefication column are separated and sent to another two-stage membrane train (not fixed) to recover CO_2 from the liquefier. While the permeate is sent to the product stream and combined with the permeate from the previously mentioned stages, the retentate is mixed with the retentate from previous stages and fed to a membrane which operates an air sweep at the permeate. The permeate side stream, which contains CO_2, is fed to the power plant.

Gilassi et al.[107] combined a simplified two-stage membrane superstructure with an enzymatic absorption system for CO_2 capture from flue gas (Figure 8). The retentate from the two



Figure 8. A simplified flow diagram for a two-stage membrane superstructure with an enzymatic absorption system for CO_2 capture from flue gas from the work of Gilassi et al. [Reproduced with permission from ref 107. Copyright 1998, Elsevier.]

membrane stages was fed into the absorption system. The hybrid system approach resulted in a 64% reduction in CAPEX, compared to a standalone membrane system. Such innovative process for CO_2 capture is encouraged.

A superstructure that enabled compression or expansion to increase or decrease the pressure of the retentate gas to match the pressure of the destination stage.[64] In the superstructure, all the flue gas was fed to the membrane first stage, and then the gas separation network would form after that. A similar superstructure was presented in another report,[52] and both studies showed that three-stage membrane systems were optimal.

It can then be deduced that the superstructure influences the number of membrane stages. However, the upper bound on the membrane size can influence the optimum number of stages. While some studies have membrane area bounds for the stages, some studies do not explicitly provide upper bounds.[51,108] In one study,[64] the minimum membrane stage area was stated to be 100 000 m^2, and the maximum possible was 1 500 000 m^2.

4. RECENT DEVELOPMENTS IN SUPERSTRUCTURE-BASED OPTIMIZATION OF GAS SEPARATION BY MEMBRANES

Table 2 shows the articles that incorporate unique and new techniques for solving superstructures. These include a new superstructure approach (building blocks) for process intensification,[59] the use of surrogate models to shorten computational time,[60] and the adoption of artificial intelligence approaches.[109]

Following the development of a novel intensification approach,[88] the "building blocks" approach was applied to the different membrane process systems (gas separation, pervaporation, membrane absorption, reverse osmosis separation).[59] The model offers flexibility and opportunities for improvement, as was demonstrated by achieving better

Table 2. Recent Articles on Gas Separation Membrane Optimization

Reference	Description
110	Artificial neural networks optimization to optimize membrane optimization problem; applicable to nanofiltration and gas seperation
59	Building blocks approach (MINLP, BARON, ANTIGONE)
60	Surrogate models for permeation of multicomponent mixtures (GAMS, MINLPSCIP solver)
27	Integrated reactor and membrane superstructure network (MINLP)
109	Artificial neural networks − nonsuperstructure
61	Assessing the suitability of a biobased polymer membrane for CO_2/CH_4 separation process
42	Simultaneous determination of membrane molecular structure and process design through machine learning combined with optimization

solutions than those presented in the literature and allowing the determination of the flow pattern in the membrane module. The building elements of the model include energy and material flow. The model developed was a MINLP implemented in GAMS and various example problems from literature were solved by BARON and also ANTIGONE. The approach showed superiority in that better solutions were realized for case studies previously presented for superstructure-based optimization. For instance, a 56% cost saving was observed when the building-block-based model was applied to a superstructure-based optimization model literature.[21]

Taifan and Maravelias[60] developed a model for the optimization of membrane systems that included surrogate models. Surrogate models were developed to accurately capture the permeation of components in nonbinary mixtures for both cross-flow and counter-current flow patterns. The model developed also allowed the use of fewer membrane stages than the maximum set, thus effectively optimizing the number of membrane stages automatically. The tightening of constraints was also suggested to aid in solving the MINLP. The solver SCIP was used to solve the model in GAMS. The results also indicated that assuming a negligible pressure drop resulted in lower separation costs. Additionally, an integrated reactor-membrane superstructure-based optimization system was proposed, as illustrated in Figure 9 with the goal to further create opportunities to reduce the cost of the process.

In a subsequent work, Taifan and Maravelias[27] sought to simultaneously optimize the membrane material with the membrane network and operating conditions. Three scenarios were considered, where (i) the same membrane material was considered in all the membrane stages, (ii) different membranes would be selected for different membrane stages, and (iii) the membrane properties such as selective layer thickness, membrane permeance, and selectivity would be optimized based on the Robeson plot and relations. Physics-based surrogate models previously used in the previous study were employed. The superstructure was novel in that it allowed several products to be collected other than conventionally the retentate and the permeate. Permeate streams and retentate streams could be mixed to give a specific product. In total, three products could be collected. The model was applied to biogas upgrading, and the model could select different sources of biogas of differing concentrations of components and thus different costs of biogas. The results reiterated that the use of different membranes in different stages results in a lower cost

https://doi.org/10.1021/acs.iecr.4c03693
Ind. Eng. Chem. Res. 2025, 64, 13905−13919

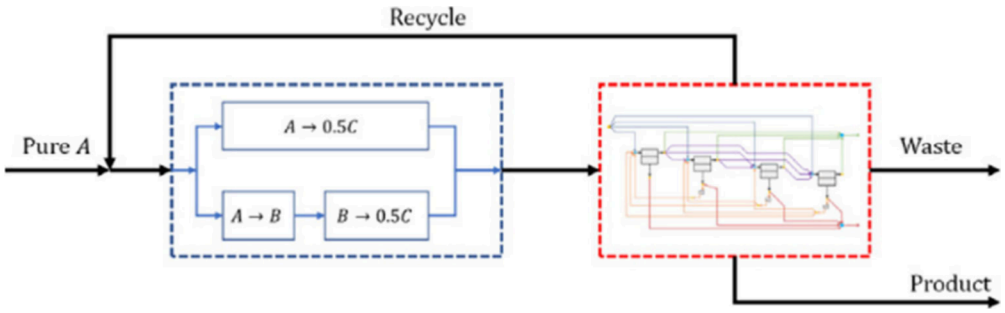

Figure 9. Simultaneous optimization of reactor and gas membrane system. [Reproduced with permission from ref 60. Copyright 2022, Elsevier.]

of separation.[47] The importance of considering multicomponent gases instead of simplifying models by assuming binary gases was highlighted. A comparison of the optimization carried out when the N_2 component is neglected, and optimization is based on a binary mixture of only CH_4, and CO_2 demonstrated that the cost of separation is underestimated compared to when N_2 is considered, even though its concentration is very low (<5%). The study also found that the crossflow flow pattern was economical compared to the counter-current flow pattern when the binary mixture was considered. However, when the multicomponent mixture was considered, the counter-current flow pattern was slightly more economical, as previously reported.[21]

Gasós et al.[109] developed ANN surrogate models for the separation of CO_2 from N_2 by use of a single-stage and a double-stage membrane process with retentate from the second stage being fed back to the first stage. A dual objective was set to minimize the electricity consumption and increase the amount of CO_2 recovered per a given membrane area. The computational time was significantly reduced when the results were compared to the solution obtained by a genetic algorithm. Superstructure-based membrane modeling can develop further in this direction.

Yuyama and Kaneko[42] have recently proposed the simultaneous determination of the membrane molecular structure and process design through an optimization approach. A machine learning model is developed to determine the permeability of molecules (N_2, O_2, and CO_2) from possible molecule structure descriptors. The predicted permeability leads to a virtual membrane, which is used in process design with the objective of achieving set separation targets.

5. CHALLENGES AND OUTLOOK

While advances are being made in superstructure-based gas separation by membrane technology, there seems to be minimal advancement in the superstructure design; hence, process design and flowsheets have largely remained unchanged. Few studies have compared the results yielded from the different superstructures presented. The building block model for membrane gas separation was compared to the superstructures previously submitted.[59] The building block approach and several artificial intelligence approaches are commendable developments.[59,110] It can also be noted that solution techniques have not been significantly improved and are not varied. This could be attributed to the solution techniques and also solution tools available to different research groups.

Some suggested process flow designs depicted in techno-economic studies, such as using part of retentate as sweep gas, have not been incorporated and presented in superstructure development.[22] Due to the complex nature of superstructure-based models and difficulties in obtaining solutions, many components and designs brought forward in simulation studies have not been incorporated in superstructure-based optimization of gas membranes. These include the design of flash tanks and bubble columns and the mixing of streams at different temperatures, which would require incorporating an equation of state to account for thermodynamic properties. This could be implemented by calling an external function in GAMS, as reported.[111−113] A model that considered nonideal conditions such as real gas, concentration polarization, and nonisothermal conditions in a hollow fiber membrane was published. Such a rigorous model could be embedded in superstructure-based optimization modeling.[114]

While optimization seems to be the ultimate solution, its feasibility and practicality have been questioned. For more practical use, a predetermined flow sheet that is known to be practical is preferred to a flowsheet provided by a superstructure-based optimization solution. However, in the case of a new process design, it would be easier as the determined flowsheet can be constructed to scale in design. Gas separation by membranes can also be carried out in membrane reactors. These have not been addressed in this work, and future work should be in that direction. Monjur et al.[115] has presented interesting work in this area, where a process intensification strategy for the application has been proposed based on the building block method.

AUTHOR INFORMATION

Corresponding Author

Natsayi Chiwaye − *Sustainable Process Engineering, School of Chemical and Metallurgical Engineering, Faculty of Engineering and the Built Environment, University of the Witwatersrand, Wits 2050 Johannesburg, South Africa;* orcid.org/0000-0003-4006-3279; Email: natsayichiwaye@gmail.com

Authors

Thokozani Majozi − *Sustainable Process Engineering, School of Chemical and Metallurgical Engineering, Faculty of Engineering and the Built Environment, University of the Witwatersrand, Wits 2050 Johannesburg, South Africa;* orcid.org/0000-0003-0864-2393

Michael O. Daramola − *Department of Chemical Engineering, Faculty of Engineering, Built Environment and Information Technology, University of Pretoria, Hatfield 0028 Pretoria, South Africa*

Complete contact information is available at: https://pubs.acs.org/10.1021/acs.iecr.4c03693

https://doi.org/10.1021/acs.iecr.4c03693
Ind. Eng. Chem. Res. 2025, 64, 13905−13919

Notes

The authors declare no competing financial interest.

■ ACKNOWLEDGMENTS

Funding from the University of the Witwatersrand Research Office is acknowledged.

■ REFERENCES

(1) Galizia, M.; Chi, W.; Smith, Z.; Merkel, T.; Baker, R.; Freeman, B. 50th Anniversary Perspective: Polymers and Mixed Matrix Membranes for Gas and Vapor Separation: A Review and Prospective Opportunities. *Macromolecules* **2017**, *50* (20), 7809.
(2) Baker, R. W. Future Directions of Membrane Gas Separation Technology. *Ind. Eng. Chem. Res.* **2002**, *41* (6), 1393−1411.
(3) Markets and Markets. Gas Separation Membranes. In *Gas Separation Membranes*. Available via the Internet at: https://www.marketsandmarkets.com/Market-Reports/gas-separation-membrane-market-50564392.html?gclid=CjwKCAjw2K6lBhBXEiwA5RjtCUGiCX5zXM3C-caaZtb2YCXg_-F8ZtOqr4z1vz-BXjPuDod3ISwT2RoCKNYQAvD_BwE (accessed July 10, 2023).
(4) Belaissaoui, B.; Favre, E. Membrane Separation Processes for Post-Combustion Carbon Dioxide Capture: State of the Art and Critical Overview. *Oil Gas Sci. Technol.−Rev. d'IFP Energies Nouv.* **2014**, *69* (6), 1005−1020.
(5) Pfister, M.; Belaissaoui, B.; Favre, E. Membrane Gas Separation Processes from Wet Postcombustion Flue Gases for Carbon Capture and Use: A Critical Reassessment. *Ind. Eng. Chem. Res.* **2017**, *56* (2), 591−602.
(6) Han, Y.; Ho, W. S. W. S. W. Recent Advances in Polymeric Membranes for CO_2 Capture. *Chin. J. Chem. Eng.* **2018**, *26* (11), 2238−2254.
(7) Ramírez-Santos, Á. A.; Bozorg, M.; Addis, B.; Piccialli, V.; Castel, C.; Favre, E. Optimization of Multistage Membrane Gas Separation Processes. Example of Application to CO_2 Capture from Blast Furnace Gas. *J. Membr. Sci.* **2018**, *566*, 346−366.
(8) García-Gusano, D.; Garraín, D.; Herrera, I.; Cabal, H.; Lechón, Y. Life Cycle Assessment of Applying CO_2 Post-Combustion Capture to the Spanish Cement Production. *J. Clean. Prod.* **2015**, *104* (2015), 328−338.
(9) Khan, M. U.; Lee, J. T. E.; Bashir, M. A.; Dissanayake, P. D.; Ok, Y. S.; Tong, Y. W.; Shariati, M. A.; Wu, S.; Ahring, B. K. Current Status of Biogas Upgrading for Direct Biomethane Use: A Review. *Renew. Sustain. Energy Rev.* **2021**, *149*, No. 111343.
(10) Sahota, S.; Shah, G.; Ghosh, P.; Kapoor, R.; Sengupta, S.; Singh, P.; Vijay, V.; Sahay, A.; Vijay, V. K.; Thakur, I. S. Review of Trends in Biogas Upgradation Technologies and Future Perspectives. *Bioresour. Technol. Reports* **2018**, *1*, 79−88.
(11) Baker, R. W. *Membrane Technology and Applications*, 2nd Edition; Wiley, 2004.
(12) Baker, R. W.; Lokhandwala, K. Natural Gas Processing with Membranes: An Overview. *Ind. Eng. Chem. Res.* **2008**, *47* (7), 2109−2121.
(13) Perry, R. H., Green, D. W., Eds. *Perry's Chemical Engineers' Handbook*, 7th Edition; McGraw−Hill: New York, 1997.
(14) Daramola, M. O.; Burger, A. J.; Pera-Titus, M.; Giroir-Fendler, A.; Miachon, S.; Lorenzen, L.; Dalmon, J. A. Nanocomposite MFI-Ceramic Hollow Fibre Membranes via Pore-Plugging Synthesis: Prospects for Xylene Isomer Separation. *J. Membr. Sci.* **2009**, *337* (1−2), 106−112.
(15) Salim, W.; Vakharia, V.; Chen, Y.; Wu, D.; Han, Y.; Ho, W. S. W. Fabrication and Field Testing of Spiral-Wound Membrane Modules for CO_2 Capture from Flue Gas. *J. Membr. Sci.* **2018**, *556* (March), 126−137.
(16) He, X.; Lindbråthen, A.; Kim, T.-J.; Hägg, M.-B. Pilot Testing on Fixed-Site-Carrier Membranes for CO_2 Capture from Flue Gas. *Int. J. Greenh. Gas Control* **2017**, *64*, 323−332.
(17) Da Conceicao, M.; Nemetz, L.; Rivero, J.; Hornbostel, K.; Lipscomb, G. Gas Separation Membrane Module Modeling: A Comprehensive Review. *Membranes (Basel)* **2023**, *13* (7), 639.
(18) Puri, P. S. Commercial Applications of Membranes in Gas Separations. In *Membrane Engineering for the Treatment of Gases: Gas-Separation Problems with Membranes*; Drioli, E., Barbieri, G., Eds.; Royal Society of Chemistry: London, 2011; Vol. *1*, pp 215−244, DOI: 10.1039/9781849733472-00215.
(19) Alkandari, S. H.; Castro-Dominguez, B. Advanced and Sustainable Manufacturing Methods of Polymer-Based Membranes for Gas Separation: A Review. *Front. Membr. Sci. Technol.* **2024**, *3* (May), 1−26.
(20) Rautenbach, R.; Dahm, W. Gas Permeation — Module Design and Arrangement. *Chem. Eng. Process. Process Intensif.* **1987**, *21* (3), 141−150.
(21) Uppaluri, R. V. S. S.; Linke, P.; Kokossis, A. C. Synthesis and Optimization of Gas Permeation Membrane Networks. *Ind. Eng. Chem. Res.* **2004**, *43* (15), 4305−4322.
(22) Merkel, T. C.; Lin, H.; Wei, X.; Baker, R. Power Plant Post-Combustion Carbon Dioxide Capture: An Opportunity for Membranes. *J. Membr. Sci.* **2010**, *359* (1−2), 126−139.
(23) Favre, E. Membrane Processes and Postcombustion Carbon Dioxide Capture: Challenges and Prospects. *Chem. Eng. J.* **2011**, *171* (3), 782−793.
(24) Hasan, M. M. F.; Zantye, M. S.; Kazi, M. Challenges and Opportunities in Carbon Capture, Utilization and Storage : A Process Systems Engineering Perspective. *Comput. Chem. Eng.* **2022**, *166* (May), No. 107925.
(25) Antonini, C.; Pérez-Calvo, J. F.; van der Spek, M.; Mazzotti, M. Optimal Design of an MDEA CO_2 Capture Plant for Low-Carbon Hydrogen Production — A Rigorous Process Optimization Approach. *Sep. Purif. Technol.* **2021**, *279*, No. 119715.
(26) Abejon, R.; Casado-coterillo, C.; Garea, A. Techno-Economic Optimization of Multistage Membrane Processes with Innovative Hollow Fiber Modules for the Production of High- Purity CO_2 and CH_4 from Different Sources. *Ind. Eng. Chem. Res.* **2022**, *61*, 8149−8165.
(27) Taifan, G. S. P. P.; Maravelias, C. T. Integrated Membrane Material Design and System Synthesis. *Chem. Eng. Sci.* **2023**, *269*, No. 118406.
(28) Yuan, M.; Teichgraeber, H.; Wilcox, J.; Brandt, A. R. Design and Operations Optimization of Membrane-Based Flexible Carbon Capture. *Int. J. Greenh. Gas Control* **2019**, *84*, 154−163.
(29) Yuan, M.; Narakornpijit, K.; Haghpanah, R.; Wilcox, J. Consideration of a Nitrogen-Selective Membrane for Postcombustion Carbon Capture through Process Modeling and Optimization. *J. Membr. Sci.* **2014**, *465*, 177−184.
(30) Purnomo, I. S. K.; Alpay, E. Membrane Column Optimisation for the Bulk Separation of Air. *Chem. Eng. Sci.* **2000**, *55* (18), 3599−3610.
(31) Pettersen, T.; Lien, K. M. Design Studies of Membrane Permeator Processes for Gas Separation. *Gas Sep. Purif.* **1995**, *9* (3), 151−169.
(32) Qi, R.; Henson, M. A. Optimization-Based Design of Spiral-Wound Membrane Systems for CO_2/CH_4 Separations. *Sep. Purif. Technol.* **1998**, *13* (3), 209−225.
(33) Mat, N. C.; Lipscomb, G. G. Global Sensitivity Analysis for Hybrid Membrane-Cryogenic Post Combustion Carbon Capture Process. *Int. J. Greenh. Gas Control* **2019**, *81*, 157.
(34) Ren, L. X.; Chang, F. L.; Kang, D. Y.; Chen, C. L. Hybrid Membrane Process for Post-Combustion CO_2 Capture from Coal-Fired Power Plant. *J. Membr. Sci.* **2020**, *603*, No. 118001.
(35) Arias, A. M.; Mores, P. L.; Scenna, N. J.; Caballero, J. A.; Mussati, S. F.; Mussati, M. C. Optimal Design of a Two-Stage Membrane System for Hydrogen Separation in Refining Processes. *Processes* **2018**, *6* (11), 208.
(36) Chen, Q.; Grossmann, I. E. Recent Developments and Challenges in Optimization-Based Process Synthesis. *Annu. Rev. Chem. Biomol. Eng.* **2017**, *8*, 249−283.

(37) Mencarelli, L.; Chen, Q.; Pagot, A.; Grossmann, I. E. A Review on Superstructure Optimization Approaches in Process System Engineering. *Comput. Chem. Eng.* **2020**, *136*, No. 106808.
(38) Poth, N.; Brusis, D.; Stichlmair, J. Rigorous Optimization of Reactive Distillation in GAMS with the Use of External Functions. *Comput.-Aided Chem. Eng.* **2003**, *14* (C), 869−874.
(39) Buabeng-Baidoo, E.; Majozi, T. Effective Synthesis and Optimization Framework for Integrated Water and Membrane Networks: A Focus on Reverse Osmosis Membranes. *Ind. Eng. Chem. Res.* **2015**, *54* (38), 9394−9406.
(40) Oke, D.; Majozi, T.; Mukherjee, R.; Sengupta, D.; El-Halwagi, M. M. *Simultaneous Energy and Water Optimisation in Shale Exploration* **2018**, *6*, 86.
(41) Qi, R.; Henson, M. A. Optimal Design of Spiral-Wound Membrane Networks for Gas Separations. *J. Membr. Sci.* **1998**, *148* (1), 71−89.
(42) Yuyama, S.; Kaneko, H. Simultaneous Design of Gas Separation Membranes and Schemes through Combined Process and Materials Informatics. *Ind. Eng. Chem. Res.* **2023**, *62* (44), 18541−18551.
(43) Qi, R.; Henson, M. A. Membrane System Design for Multicomponent Gas Mixtures via Mixed-Integer Nonlinear Programming. *Comput. Chem. Eng.* **2000**, *24* (12), 2719−2737.
(44) Kookos, I. K. A Targeting Approach to the Synthesis of Membrane Networks for Gas Separations. *J. Membr. Sci.* **2002**, *208* (1−2), 193−202.
(45) Hasan, M. M. F.; Baliban, R. C.; Elia, J. A.; Floudas, C. A. Modeling, Simulation, and Optimization of Postcombustion CO_2 Capture for Variable Feed Concentration and Flow Rate. 1. Chemical Absorption and Membrane Processes. *Ind. Eng. Chem. Res.* **2012**, *51* (48), 15642−15664.
(46) Scholz, M.; Alders, M.; Lohaus, T.; Wessling, M. Structural Optimization of Membrane-Based Biogas Upgrading Processes. *J. Membr. Sci.* **2015**, *474*, 1−10.
(47) Ohs, B.; Lohaus, J.; Wessling, M. Optimization of Membrane Based Nitrogen Removal from Natural Gas. *J. Membr. Sci.* **2016**, *498*, 291−301.
(48) Aliaga-Vicente, A.; Caballero, J. A.; Fernández-Torres, M. J. Synthesis and Optimization of Membrane Cascade for Gas Separation via Mixed-integer Nonlinear Programming. *AIChE J.* **2017**, *63* (6), 1989−2006.
(49) Arias, A. M.; Mussati, M. C.; Mores, P. L.; Scenna, N. J.; Caballero, J. A.; Mussati, S. F. Optimization of Multi-Stage Membrane Systems for CO_2 Capture from Flue Gas. *Int. J. Greenh. Gas Control* **2016**, *53*, 371−390.
(50) Mores, P. L.; Arias, A. M.; Scenna, N. J.; Caballero, J. A.; Mussati, S. F.; Mussati, M. C. Membrane-Based Processes: Optimization of Hydrogen Separation by Minimization of Power, Membrane Area, and Cost. *Processes* **2018**, *6* (11), 221.
(51) Mores, P. L.; Arias, A. M.; Scenna, N. J.; Mussati, M. C.; Mussati, S. F. Cost-Based Comparison of Multi-Stage Membrane Configurations for Carbon Capture from Flue Gas of Power Plants. *Int. J. Greenh. Gas Control* **2019**, *86* (May), 177−190.
(52) Gilassi, S.; Taghavi, S. M.; Rodrigue, D.; Kaliaguine, S. Optimizing Membrane Module for Biogas Separation. *Int. J. Greenh. Gas Control* **2019**, *83* (March), 195−207.
(53) Zarca, G.; Urtiaga, A.; Biegler, L. T.; Ortiz, I. An Optimization Model for Assessment of Membrane-Based Post-Combustion Gas Upcycling into Hydrogen or Syngas. *J. Membr. Sci.* **2018**, *563*, 83−92.
(54) Zarca, R.; Ortiz, A.; Gorri, D.; Biegler, L. T.; Ortiz, I. Optimization of Multistage Olefin/Paraffin Membrane Separation Processes through Rigorous Modeling. *AIChE J.* **2019**, *65* (6), e16588.
(55) Bozorg, M.; Ramírez-Santos, Á. A.; Addis, B.; Piccialli, V.; Castel, C.; Favre, E. Optimal Process Design of Biogas Upgrading Membrane Systems: Polymeric vs High Performance Inorganic Membrane Materials. *Chem. Eng. Sci.* **2020**, *225*, No. 115769.
(56) Chiwaye, N.; Majozi, T.; Daramola, M. O. Optimisation of Post-Combustion Carbon Dioxide Capture by Use of a Fixed Site Carrier Membrane. *Int. J. Greenh. Gas Control* **2021**, *104*, No. 103182.
(57) Chiwaye, N.; Majozi, T.; Daramola, M. O. On Optimisation of N_2 and CO_2 -Selective Hybrid Membrane Process Systems for Post-Combustion CO_2 Capture from Coal-Fired Power Plants. *J. Membr. Sci.* **2021**, *638* (April), No. 119691.
(58) Chavez Velasco, J. A.; Tumbalam Gooty, R.; Tawarmalani, M.; Agrawal, R. Optimal Design of Membrane Cascades for Gaseous and Liquid Mixtures via MINLP. *J. Membr. Sci.* **2021**, *636* (March), No. 119514.
(59) Demirel, S. E.; Li, J.; Hasan, M. M. F. Membrane Separation Process Design and Intensification. *Ind. Eng. Chem. Res.* **2021**, *60* (19), 7197−7217.
(60) Taifan, G. S. P.; Maravelias, C. T. Generalized Optimization-Based Synthesis of Membrane Systems for Multicomponent Gas Mixture Separation. *Chem. Eng. Sci.* **2022**, *252*, No. 117482.
(61) Ramezani, R.; Randon, A.; Felice, L. Di; Gallucci, F. Using a Superstructure Approach for Techno-Economic Analysis of Membrane Processes. *Chem. Eng. Res. Des.* **2023**, *199*, 296−311.
(62) Arias, A. M.; Scenna, N. J.; Mores, P. L. Membrane Superstructure Optimization for Carbon Capture from Cement Plants. Water Content Influence on Optimal Solution. *Int. J. Greenhouse Gas Control* **2023**, *129*, 103964.
(63) Gabrielli, P.; Gazzani, M.; Mazzotti, M. On the Optimal Design of Membrane-Based Gas Separation Processes. *J. Membr. Sci.* **2017**, *526*, 118−130.
(64) Lee, S.; Binns, M.; Kim, J.-K. Automated Process Design and Optimization of Membrane-Based CO_2 Capture for a Coal-Based Power Plant. *J. Membr. Sci.* **2018**, *563*, 820−834.
(65) He, X. The Latest Development on Membrane Materials and Processes for Post-Combustion CO_2 Capture: A Review. *SF J. Mater. Chem. Eng* **2018**, *1* (1), 1009.
(66) Qi, R.; Henson, M. A. Approximate Modeling of Spiral-Wound Gas Permeators. *J. Membr. Sci.* **1996**, *121* (1), 11−24.
(67) Uppaluri, R. V. S.; Smith, R.; Linke, P.; Kokossis, A. C. On the Simultaneous Optimization of Pressure and Layout for Gas Permeation Membrane Systems. *J. Membr. Sci.* **2006**, *280* (1−2), 832−848.
(68) Binns, M.; Lee, S.; Yeo, Y.-K.; Lee, J. H.; Moon, J.-H.; Yeo, J.-g.; Kim, J.-K. Strategies for the simulation of multi-component hollow fibre multi-stage membrane gas separation systems. *J. Membr. Sci.* **2016**, *497*, 458−471.
(69) Shampine, L. F.; Reichelt, M. W. Ode_Suite. *J. Sci. Comput.* **1997**, *18*, 1−22.
(70) Robeson, L. M. Correlation of Separation Factor versus Permeability for Polymeric Membranes. *J. Membr. Sci.* **1991**, *62* (2), 165−185.
(71) Robeson, L. M. The Upper Bound Revisited. *J. Membr. Sci.* **2008**, *320* (1−2), 390−400.
(72) Zarca, R.; Ortiz, A.; Gorri, D.; Ortiz, I. Generalized Predictive Modeling for Facilitated Transport Membranes Accounting for Fixed and Mobile Carriers. *J. Membr. Sci.* **2017**, *542* (June), 168−176.
(73) Rea, R.; De Angelis, M. G.; Baschetti, M. G. Models for Facilitated Transport Membranes: A Review. *Membranes (Basel)* **2019**, *9* (2), 26.
(74) Bazolana, N. C.; Majozi, T. Optimum Water Network Design for Multipurpose Batch Plants with a Detailed Electrodialysis Regeneration Model. *Ind. Eng. Chem. Res.* **2020**, *59* (40), 17944−17963.
(75) Pulluru, S. J.; Akkerman, R. Water-Integrated Scheduling of Batch Process Plants: Modelling Approach and Application in Technology Selection. *Eur. J. Oper. Res.* **2018**, *269* (1), 227−243.
(76) Gilassi, S.; Taghavi, S. M.; Rodrigue, D.; Kaliaguine, S. Simulation of Gas Separation Using Partial Element Stage Cut Modeling of Hollow Fiber Membrane Modules. *AIChE J.* **2018**, *64* (5), 1766−1777.
(77) Caravella, A.; Sun, Y. Correct Evaluation of the Effective Concentration Polarization Influence in Membrane-Assisted Devices. Case Study: H_2 production by Water Gas Shift in Pd-Membrane Reactors. *Int. J. Hydrogen Energy* **2016**, *41* (27), 11653−11659.

https://doi.org/10.1021/acs.iecr.4c03693
Ind. Eng. Chem. Res. 2025, 64, 13905−13919

(78) Yeom, C. K.; Lee, S. H.; Lee, J. M.; Song, H. Y. Modeling and Evaluation of Boundary Layer Resistance at Feed in the Permeation of VOC/N_2 Mixtures through PDMS Membrane. *J. Membrane Sci.* **2002**, *204*, 303−322.
(79) Caravella, A. Concentration Polarization in Gas Separation. *Encyclopedia of Membranes* **2014**, 1.
(80) Uppaluri, R.; Smith, R.; Linke, P.; Kokossis, A. Optimal Design of Gas Permeation Membrane & Membrane Adsorption Hybrid Systems. *Comput.-Aided Chem. Eng.* **2002**, *10*, 367−372.
(81) Alshehri, A.; Khalilpour, R.; Abbas, A.; Lai, Z. Membrane Systems Engineering for Post-Combustion Carbon Capture. *Energy Procedia* **2013**, *37*, 976−985.
(82) Datta, A. K.; Sen, P. K. Optimization of Membrane Unit for Removing Carbon Dioxide from Natural Gas. *J. Membr. Sci.* **2006**, *283* (1−2), 291−300.
(83) White, L. S.; Amo, K. D.; Wu, T.; Merkel, T. C. Extended Field Trials of Polaris Sweep Modules for Carbon Capture. *J. Membr. Sci.* **2017**, *542*, 217−225.
(84) Han, Y.; Salim, W.; Chen, K. K.; Wu, D.; Ho, W. S. W. Field Trial of Spiral-Wound Facilitated Transport Membrane Module for CO_2 Capture from Flue Gas. *J. Membr. Sci.* **2019**, *575*, 242−251.
(85) Crabtree, E. W.; El-Halwagi, M. M.; Dunn, R. F. Synthesis of Hybrid Gas Permeation Membrane/Condensation Systems for Pollution Prevention. *J. Air Waste Manag. Assoc.* **1998**, *48* (7), 616−626.
(86) El-Halwagi, M. M. Synthesis of Reverse-osmosis Networks for Waste Reduction. *AIChE J.* **1992**, *38* (8), 1185−1198.
(87) Zamarripa, M. A.; Eslick, J. C.; Matuszewski, M. S.; Miller, D. C. Multi-Objective Optimization of Membrane-Based CO_2 Capture. *Comput.-Aided Chem. Eng.* **2018**, *44*, 1117−1122.
(88) Demirel, S. E.; Li, J.; Hasan, M. M. F. Systematic Process Intensification Using Building Blocks. *Comput. Chem. Eng.* **2017**, *105*, 2−38.
(89) Edgar, T.; Himmelblau, D. M.; Lasdon, L. S. *Optimization of Chemical Processes*; Glandt, E. D., Klein, M., Edgar, T., Eds.; McGraw-Hill, 2001.
(90) McCandless, F. P. The Extent of Separation in Single Permeation Stages. *J. Membr. Sci.* **1984**, *17* (3), 323−328.
(91) Rony, P. R. The Extent of Separation: A Universal Separation Index. *Sep. Sci.* **1968**, *3* (3), 239−248.
(92) Fourer, R.; Gay, D. M.; Kernighan, B. W. A Modeling Language for Mathematical Programming. *Manage. Sci.* **1990**, *36* (5), 519−554.
(93) Neumaier, A.; Shcherbina, O.; Huyer, W.; Vinkó, T. A Comparison of Complete Global Optimization Solvers. *Math. Program.* **2005**, *103* (2), 335−356.
(94) Kronqvist, J.; Bernal, D. E.; Lundell, A.; Grossmann, I. E. A Review and Comparison of Solvers for Convex MINLP. *Optim. Eng.* **2019**, *20*, 397−455.
(95) Mann, S. Progress in MINLP Solver Technology. GAMS Website. Available via the Internet at: https://www.gams.com/blog/2022/11/progress-in-minlp-solver-technology/ (accessed March 12, 2024).
(96) Alkhalifa, L. Comparison Between Five Minlp Solvers and New Results Related To Trigonometric Functions. *Fractals* **2022**, *30* (10), 1−13.
(97) Marriott, J.; Sørensen, E. The Optimal Design of Membrane Systems. *Chem. Eng. Sci.* **2003**, *58* (22), 4991−5004.
(98) Shafiee, A.; Nomvar, M.; Liu, Z.; Abbas, A. Automated Process Synthesis for Optimal Flowsheet Design of a Hybrid Membrane Cryogenic Carbon Capture Process. *J. Clean. Prod.* **2017**, *150*, 309−323.
(99) Hwang, S. F.; He, R. S. A Hybrid Real-Parameter Genetic Algorithm for Function Optimization. *Adv. Eng. Informatics* **2006**, *20* (1), 7−21.
(100) Scholes, C. A.; Stevens, G. W.; Kentish, S. E. Membrane Gas Separation Applications in Natural Gas Processing. *Fuel* **2012**, *96*, 15−28.
(101) Kentish, S. E. 110th Anniversary: Process Developments in Carbon Dioxide Capture Using Membrane Technology. *Ind. Eng. Chem. Res.* **2019**, *58* (28), 12868−12875.
(102) Huang, Y.; Merkel, T. C.; Baker, R. W. Pressure Ratio and Its Impact on Membrane Gas Separation Processes. *J. Membr. Sci.* **2014**, *463*, 33−40.
(103) Delgado, A.; Herzog, H. J. A Simple Model to Help Understand Water Use at Power Plants; 2012. Available via the Internet at: http://sequestration.mit.edu/pdf/2012_AD_HJH_WorkingPaper-WaterUse_at_PowerPlants.pdf.
(104) Scholes, C. A.; Qader, A.; Stevens, G. W.; Kentish, S. E. Membrane Pilot Plant Trials of CO2 Seperation from Flue Gas. *Greenhouse Gases Sci. Technol.* **2015**, *5*, 229−237.
(105) Scholes, C. A.; Kentish, S. E.; Stevens, G. W. Effects of Minor Components in Carbon Dioxide Capture Using Polymeric Gas Separation Membranes. *Sep. Purif. Rev.* **2009**, *38* (1), 1−44.
(106) Li, S.; Wang, Z.; He, W.; Zhang, C.; Wu, H.; Wang, J.; Wang, S. Effects of Minor SO2 on the Transport Properties of Fixed Carrier Membranes for CO_2 Capture. *Ind. & Eng. Chem. Res.* **2014**, *53* (18), 7758−7767.
(107) Gilassi, S.; Taghavi, S. M.; Rodrigue, D.; Kaliaguine, S. Techno-Economic Analysis of a Hybrid System for Flue-Gas Separation : Combining Membrane and Enzymatic-Absorption Processes. *Chem. Eng. Process. - Process Intensif.* **2021**, *159*, No. 108222.
(108) Arias, A.; Mussati, M.; Scenna, N.; Mussati, S. Simultaneous Optimization of Multi-Stage Membrane Systems for CO_2 Capture from a Coal Fired Power Plant. Presented at *ICCBE 2015*; Consejo Nacional de Investigaciones Científicas y Técnicas, 2015.
(109) Gasós, A.; Becattini, V.; Brunetti, A.; Barbieri, G.; Mazzotti, M. Process Performance Maps for Membrane-Based CO_2 Separation Using Artificial Neural Networks. *Int. J. Greenh. Gas Control* **2023**, *122*, 103812.
(110) Rall, D.; Schweidtmann, A. M.; Kruse, M.; Evdochenko, E.; Mitsos, A.; Wessling, M. Multi-Scale Membrane Process Optimization with High-Fidelity Ion Transport Models through Machine Learning. *J. Membr. Sci.* **2020**, *608* (May), No. 118208.
(111) Skiborowski, M.; Harwardt, A.; Marquardt, W. Efficient Optimization-Based Design for the Separation of Heterogeneous Azeotropic Mixtures. *Comput. Chem. Eng.* **2015**, *72*, 34−51.
(112) Krone, D.; Esche, E.; Repke, J.; Asprion, N.; Skiborowski, M. Mixed-Integer Optimization in GAMS Using CAPE-OPEN Thermodynamics via MOSAICmodeling and COBIA for Conceptual Design; 2019. Available via the Internet at: https://www.colan.org/presentation/cobia-gams-mosaicmodelling/.
(113) Manassaldi, J. I.; Mussati, M. C.; Scenna, N. J.; Mussati, S. F. Development of Thermodynamic Properties Package Libraries for Using in GAMS through Extrinsic Functions. *GAMS Forum* **2018**, January, DOI: 10.13140/RG.2.2.35994.75202.
(114) Soroodan Miandoab, E.; Kentish, S. E.; Scholes, C. A. Non-Ideal Modelling of Polymeric Hollow-Fibre Membrane Systems: Pre-Combustion CO_2 Capture Case Study. *J. Membr. Sci.* **2020**, *595*, 117470.
(115) Monjur, M. S.; Demirel, S. E.; Li, J.; Hasan, M. M. F. SPICE _ MARS : A Process Synthesis Framework for Membrane- Assisted Reactive Separations. *Ind. Eng. Chem. Res.* **2021**, *60*, 7635−7655.

https://doi.org/10.1021/acs.iecr.4c03693
Ind. Eng. Chem. Res. 2025, 64, 13905−13919