

https://dspace.org/

Technoeconomic feasibility and environmental life cycle impacts of struvite production from pig waste with ferrochrome slag as a magnesium source

T.T Monhongo; Langa Moyo; Geoffrey Simate

https://hdl.handle.net/10539/45512
WOS

Downloaded from a DSpace repository. https://dspace.org/

Cleaner Waste Systems 12 (2025) 100338

Contents lists available at ScienceDirect

Cleaner Waste Systems

journal homepage: www.journals.elsevier.com/cleaner-waste-systems

Techno-economic feasibility and environmental life cycle impacts of struvite production from pig waste with ferrochrome slag as a magnesium source

Tariro Tecla Manhongo [a], Langa Bright Moyo [a,b,*], Geoffrey S. Simate [b]

[a] Department of Chemical Engineering, National University of Science and Technology, P. O. Box AC939, Ascot, Bulawayo, Zimbabwe
[b] School of Chemical and Metallurgical Engineering, University of the Witwatersrand, Private Bag 3, Wits, Johannesburg 2050, South Africa

ARTICLE INFO

Keywords:
Struvite
Ferrochrome slag
Acid leaching
Pig waste digestate
Economic analysis
Environmental life cycle analysis

ABSTRACT

Ferrochrome slag (FCS), a by-product of the iron and steel industry, has been evaluated as a potential alternative magnesium source in the recovery of struvite. The actual benefits of FCS-derived magnesium in recovering struvite as a low-cost fertilizer are poorly understood. This study evaluated the techno-economic viability and environmental sustainability of recovering struvite from pig waste using FCS as a magnesium source. Five comparable scenarios were modeled in Aspen Plus® to quantify input and output flows, which were subsequently used to estimate the economic and environmental performances of struvite production. All five Scenarios were designed to produce 364.56 kg of struvite via processing of 8 m of digestate and 0.4 tonnes of slag per hour. Scenario 1 produced struvite only, Scenario 2 produced struvite and 62.02 kg/h of an iron/aluminium catalyst, Scenario 3 produced struvite and 486.09 m^3/h of biogas, Scenario 4 produced struvite, catalyst (62.02 kg/h), and biogas (486.09 m^3/h), while Scenario 5 considered recovery of struvite, catalyst (62.02 kg/h (343.48 m^3/h), biogas, and digestate (865.35 kg/h) as products. All 5 scenarios are not economically viable but NPVs increase with the recovery of more products from -$38.77 million (Scenario 1) to -$8.00 million (Scenario 5). There is a general decrease in the environmental impacts including global warming potential (10.74–6.53 kg CO_2 eq. per kg of slag), and fossil resource scarcity (3.12–1.75 kg oil eq./kg of slag) from Scenario 1 to Scenario 5 attributed to onsite co-recovery of struvite with biogas (Scenarios 3–5) compared to offsite recovery where the digestate has to be transported from a pig farm (Scenarios 1 and 2). Also, when the economic allocation is used, the environmental impacts associated with struvite decrease as more products are recovered. For instance, the global warming potential for struvite decreases from 10.74 kg CO2 eq. in Scenario 1–1.81 10.74 kg CO2 eq. per kg of struvite in Scenario 5. This study demonstrates that the recovery of struvite using FCS-derived magnesium is not attractive, but its recovery together with iron/aluminium catalysts, biogas, and digestate significantly enhances both the economic viability and environmental sustainability of nutrient recovery processes.

Introduction

The current unprecedented challenges associated with global warming and climate change, attributable to human activities, are increasingly prompting a global shift towards more sustainable practices. Mainly characterized by recurrent droughts and floods, rising sea levels, as well as increasing global, soil, and ocean temperatures, the impacts are devastating. For instance, Southern Africa has been marred by drought spells, with the 2023–2024 season being the worst and most recent dry spell. The impact of the drought cannot be understated, as countries such as Zimbabwe, Zambia, and Malawi declared it a national disaster (Guardian News, 2024). The persistent drought conditions, which are undoubtedly attributable to climate change, have presented a perennial challenge to farmers in Southern Africa, particularly affecting crop yields and livestock production (Ndlovu et al., 2020; Ndlovu and Zenda, 2024; Wilk et al., 2013; Zenda, 2024). Given the increasing world population and the consequently expanding demand for food and energy, it is critical to rethink solutions aimed at combating and mitigating the impacts of climate change for improved food and energy security.

Overcoming the existing challenges and developing resilience to future drought conditions can be achieved by implementing sustainable agricultural practices such as effective nutrient management, using

* Corresponding author at: Department of Chemical Engineering, National University of Science and Technology, P. O. Box AC939, Ascot, Bulawayo, Zimbabwe.
E-mail address: tariro.manhongo@nust.ac.zw (L.B. Moyo).

https://doi.org/10.1016/j.clwas.2025.100338
Received 25 April 2025; Received in revised form 17 June 2025; Accepted 19 June 2025
Available online 24 June 2025
2772-9125/© 2025 The Authors. Published by Elsevier Ltd. This is an open access article under the CC BY-NC-ND license (http://creativecommons.org/licenses/by-nc-nd/4.0/).

fewer pesticides, and adopting fewer chemical applications during farming, leading to healthier soils and fewer carbon emissions (Davis et al., 2023; Sharma et al., 2024). This is imperative as healthy soils can absorb more water, retain moisture, and improve drought resilience (Tahat et al., 2020). In addition, they also sequester carbon, which helps to minimize the impact of climate change (Huzenko and Kononenko, 2024). A balanced crop nutrition, together with good agricultural practices, is crucial for the regeneration of healthy soils (Al-Shammary et al., 2024). In this regard, the fertilizer of choice is critical to ensuring healthy soils. Diverse studies stress that it is imperative to adopt greener and alternative fertilizers for enhanced soil health and reduced dependence on synthetic chemicals. This transition is essential for promoting sustainable farming and mitigating the adverse effects of conventional fertilizers.

While research on the use of organic fertilizers is still ongoing, it is critical to note that the majority of fertilizers currently in use are inorganic chemicals with nitrogen and phosphorus as the main constituents of inorganic fertilizers (Aryal et al., 2021). Nitrogen is readily available as a major constituent of air, while phosphorus, on the other hand, is obtained via the mining of phosphorus rocks, which are a finite resource. Cognizant of the increasing demand for fertilizers, coupled with the non-renewable nature of phosphate rocks, it has become imperative, therefore, that alternative sources of phosphorus are sought out (Rey-Martínez et al., 2024). One upcoming and promising pathway is the recovery of phosphorus from waste streams via struvite ($MgNH_4PO_4 \bullet 6H_2O$) precipitation. Comprising about 10 % magnesium, 7 % ammonium, 39 % phosphate, and 44 % water (w/w) (Nagarajan et al., 2024), struvite is a renewable fertilizer that can be effectively used to reduce dependence on non-renewable fertilizers (Yan et al., 2023).

Various sources of struvite have been explored, among them, pig waste (PW) (Chandrasekaran et al., 2024; Lavanya et al., 2019; Magrí et al., 2024; Moyo et al., 2023; Shim et al., 2021; Yan et al., 2023), which is commonly first anaerobically digested to produce biogas, also generating a nutrient-rich digestate as a by-product (Nagarajan et al., 2023). Pig waste digestate (PWD) contains significant amounts of nitrogen, phosphorus, and magnesium, which are the key components for struvite formation. Nutrient recovery from pig manure via struvite precipitation plays a crucial role in promoting agricultural sustainability by reducing the need for synthetic fertilizers, thereby steering the industry towards sustainability (SDGs 2, 12, 13, and 15). Struvite adoption in the agriculture sector presents economic benefits wherein the performance of struvite supersedes commercial phosphorus fertilizers (Nagarajan et al., 2023). In addition, struvite precipitation is envisaged to curb nutrient pollution in water bodies, thus preserving the ecological balance in aquatic environments (SDG 6), enhancing the efficient management of pig manure to reduce excessive freshwater consumption (SDG 6), and offsetting carbon dioxide emissions resulting from pig manure treatment by generating value-added products (SDG 11) (Kim et al., 2023; Ryu et al., 2020; Zhang et al., 2014).

Despite the great potential presented by struvite recovery, one of the major drawbacks to its commercialization is the need for sustainable magnesium sources. Commercial magnesium sources such as magnesium chloride and magnesium sulfate have been predominantly used for supplementing magnesium for struvite precipitation, but this normally accounts for up to 70 % of the production costs (Al-Mallahi et al., 2020). Magnesium oxide has been evaluated as a low-cost magnesium source, however, it is limited by poor solubilization (Moyo et al., 2023). Consequently, to alleviate the challenges associated with the current magnesium sources, ferrochrome slag (FCS) has been evaluated as a magnesium source (Moyo et al., 2023). FCS is a by-product of ferrochrome smelting, which needs appropriate disposal. It has been reported that 1.2 kg of FCS is generated per kg of ferrochrome produced (Moyo et al., 2022a). The exploitation of FCS, whose utilization in agricultural applications has been barely explored, will not only enhance sound waste management practices but could also enhance both the economic and environmental sustainability of nutrient recovery systems, thus contributing to sustainable agricultural practices. Because of the increasing need to shift from linear to more circular economies, co-utilization of FCS and PWD in struvite production will be a step towards embracing the circular economy (Sathish and Saraswat, 2025). However, adoption of such struvite production processes at industrial scale will depend on the sustainability of the selected processes.

Studies on the economic viability and environmental impacts of struvite recovery systems are still limited, thus stalling industrial-scale operations (Li et al., 2019). It is therefore necessary that the economic viability and environmental sustainability of any conceptualized processes are evaluated at the design stages so that unsustainable processing routes are eliminated. This study assessed the sustainability of struvite production by comparing the technical feasibility, economic viability, and life cycle environmental impacts of five scenarios for pig manure and ferrochrome slag treatment towards the production of fertilizer-grade struvite.

Materials and methods

The study was carried out to evaluate the technical, economic, and environmental performances of struvite production from two locally available waste streams: pig waste (PW) and FCS. First, results from a laboratory-scale set-up were used to generate mass and energy balances for the involved components and streams using a combination of Aspen Plus and a Microsoft Excel spreadsheet. In the lab-scale set-up, the PW was first co-digested anaerobically with banana peel (BP) (120 g BP/L of PW) for recovery of biogas and digestate, and the digestate was then co-processed with FCS from a ferrochrome processing facility to produce struvite. The base plant capacity was set based on the digestate flow rate of 8 m^3/h of digestate (Saerens et al., 2021). Under the stated digestate flow rate, 364.56 kg/h of struvite would be produced. Nonetheless, to provide a more informed platform for decision-making, the impact of plant capacity on economic performance was evaluated using sensitivity and uncertainty analysis. The involved processes are described in more detail in the following sub-sections.

Description of process scenarios

To assess the feasibility of industrial-scale utilization of PW and FCS in the production of struvite, five scenarios were evaluated and compared. The scenarios were conceptualized based on the zero-waste approach, which seeks to minimize the generation of streams that would need to be disposed of as waste. Scenario 1 evaluates a standalone process for recovering struvite only using digestate imported from an off-site pig waste anaerobic digester. For the mentioned scenario, it was assumed that the liquid digestate would be transported from a digester located on a pig farm within a distance of 100 km, while slag is brought within the same distance from a ferrochrome processing facility. After struvite production, the residual slag and resultant sludge from the COD/iron removal process are landfilled, and the generated wastewater is disposed of into the municipal drainage. Scenario 2 considers the same settings as Scenario 1, but the residual sludge post-COD/iron removal is further processed for recovery of an iron/aluminium product that has potential uses as a catalyst.

The processes for Scenarios 3 and 4 are similar to those for Scenarios 1 and 2, respectively, except that struvite and the iron/aluminium catalyst are recovered on the pig farm where AD of the PW takes place. In addition to the struvite, biogas is recovered as a second product in Scenario 3, while the iron/aluminium catalyst, biogas, and digestate are recovered as additional products in Scenario 4. Scenario 5 has processes identical to Scenario 4, the main difference is that the digestate is dried and sold as an organic fertilizer in Scenario 5, whereas in both Scenario 3 and 4, it is co-combusted with biogas to produce steam for heating purposes within the plant. Scenarios 3–5 combust part of the biogas for the generation of steam for onsite heating purposes and the excess is compressed and sold as a fuel. Process flow diagrams for the envisaged

scenarios are presented in Figs. 1 and 2, while detailed descriptions of the involved unit processes are provided in the following subsections.

Anaerobic digestion

Anaerobic digestion is an extensively exploited process for the conversion of organic streams into biogas and digestate. Owing to the high nitrogen content of PW, AD is generally not ideal, but co-digestion with other substrates improves the rate and efficiency of PW digestion (Gaworski et al., 2017). The process conditions for AD were obtained from a previous study that evaluated laboratory-scale co-digestion of BP and PW, and these are; a pH of 5.4, ambient temperature, and retention time of 72 h (Moyo et al., 2022b). The BP is first shredded with a knife shredder, washed with water to remove dirt and unwanted material, and then dried at 90 °C. The dried peels are milled to < 250 μm (Moyo et al., 2022b) and mixed with freshly collected PW at a ratio of 120 g BP/L of PW. A biogas yield of 0.57 m^3/kg VS was assumed, with a composition of 52.9 % methane (Pinto et al., 2023), 42 % carbon dioxide, and the balance being traces of water vapor, hydrogen sulfide, and ammonia. Part of the biogas is combusted for heating purposes, and the rest is compressed for sale as fuel, while the solid and liquid phases of the digestate are separated via filtration in Scenarios 3–5. The liquid digestate is used in struvite recovery, while the solids are dried and co-combusted with biogas in Scenarios 3 and 4 or sold as an organic fertilizer in Scenario 5.

Recovery of nitrogen and phosphorus as struvite

The envisaged struvite production process utilizes nitrogen and phosphorus recovered from PWD and magnesium from FCS. Slag collected from a local processing facility is pulverized, then leached at 80 °C with 5 M HCl in solids: liquid ratio of 1 g:10 ml, wherein 14.02 g L^{-1} of magnesium ions are extracted into the leach solution (Moyo et al., 2023). Following the separation of magnesium-free slag and leachate via filtration, the leachate is mixed with liquid digestate that is generated from a filtration stage for separating the liquid and solid phases of PWD. The resultant mixture, containing 2.65 g L^{-1} of total iron, is mixed with 28 wt% hydrogen peroxide (H_2O_2). An H_2O_2:Fe molar ratio of 0.75, suitable for the simultaneous removal of the organic matter in PWD and iron, which would have been co-leached with magnesium in FCS, is used, wherein 95.06 % and 94.00 % removal efficiencies of chemical oxygen demand (COD) and total iron, respectively, are obtained. A pH adjustment to 4.0 with 5 M sodium hydroxide (NaOH) precipitates the Fenton sludge (mainly ferric hydroxide), which is removed by filtration. To produce struvite, potassium polyphosphate is added to the COD- and iron-reduced mixture to achieve a Mg: N: P Molar ratio of 1.2: 1: 1.15 at pH 9.5. The produced struvite is recovered by centrifugation, followed by washing, and drying at 40 °C for sale as the struvite product.

Iron and aluminium recovery

Beyond magnesium, FCS contains significant amounts of other valuable components, including aluminium and iron, which can be further beneficiated. After the Fenton process, the high-COD and iron sludge needs to be treated before disposal, potentially reducing the sludge volume by about 50 % (Zhang et al., 2017). Treatment of the sludge was considered in Scenarios 2, 4, and 5. Iron-containing sludge generated from the Fenton process is further processed for recovery of iron and aluminium suitable for use as a catalyst for other Fenton-related processes, thus minimizing the disposal effects of hazardous ferric waste. The simple method reported by Cao et al. (2009) was adopted for the recovery of iron and aluminium, wherein the dewatered sludge is dried and baked at 350–400 °C, cooled, and packaged for sale as an iron/-aluminium catalyst.

Techno-economic analysis

An evaluation of the techno-economic viability of recovering struvite, biogas, and an iron/aluminium catalyst from pig waste and slag was done. A base plant capacity of 400 kg of slag and 8 m of digestate was used, from which 364.56 kg of struvite was recovered in all Scenarios. The struvite yield is a simplified assumption made on the basis that all scenarios were designed to process the same amounts for digestate and FCS. Scenarios 1 and 2 use digestate transported from the pig farm whereas Scenarios 3–5 use the digestate generated by an anaerobic digestion process on site. Since the conditions for struvite recovery are the same for all 5 scenarios, it was assumed that the output would be the same, with the differences being the products co-recovered with the struvite.

To estimate the capital expenses, a process flow model was developed in Aspen Plus, and equipment costs were calculated based on the mass and energy flows that were generated from the Aspen Plus simulation models. Relevant literature and supplier websites were consulted for the purchased costs of equipment that could not be predicted using the Aspen Plus Economic Analyser® database. Literature values were adjusted for time and capacity using the Chemical Engineering Plant Cost Index (CEPCI) (Peters and Timmerhaus, 1991). The Total Capital Investment (TCI) was calculated as the sum of the Total Direct Costs, Total Indirect Costs (TIC), and Working Capital (WC). TIC was estimated at 60 % of TDC constituting the costs of freight to deliver the equipment to the plant site, contractor expenses, and contingencies (Seider et al., 2015) while the WC was estimated as 5 % of the Fixed Capital Investment (FCI), wherein, the FCI is the sum of the TIC and TDC. For a 24 hr/day plant operating time with an availability of 330 days/year, a plant life of 30 years was assumed.

Estimates for the Total Production Costs (TPC) comprised direct production costs or variable operating costs (VOC), fixed charges (FC), and plant overheads (Peters and Timmerhaus, 1991). Direct manufacturing expenses, such as purchasing slag and pig manure, chemicals, utilities, and disposing of leftover slag, are included in VOC costs, whereas FC costs include labor, plant depreciation, property insurance, taxes, and rent (Davis et al., 2018). Plant maintenance expenses, as well as those related to warehousing and storage facilities, were calculated as part of plant overheads. The study was done in US dollars (USD), and the straight-line method was used to compute equipment depreciation with a 20-year recovery period and 0 % salvage value. The net present value (NPV), minimum product selling price (MPSP), and internal rate of return (IRR) were calculated using discounted cash flow analysis, assuming relevant Zimbabwean economic parameters.

Investment risks could emanate from uncertainties in the profitability of the assessed scenarios arising from variations in input parameters. Accordingly, the impact on the NPV, of variations in product prices (struvite, catalyst, digestate, and biogas), as well as the price of hydrochloric acid, labor, total production costs, and capital costs, varied within 50 % was evaluated.

Environmental life cycle analysis

The environmental life cycle impacts associated with the production of struvite from waste materials (slag and digestate) were estimated using the ISO 14040 LCA approach (Finkbeiner, 2014). The approach requires a statement of the goal and scope, setting up of system boundaries and the functional unit, generation of an inventory list, and calculation of impacts. The environmental analysis was carried out to provide insights into which setups are environmentally sustainable for producing struvite from pig waste digestate with ferrochrome slag as a magnesium source. To carry out the assessment, the mass and energy flows generated from the Aspen Plus process simulation models were adopted.

For Scenarios 1 and 2, the system boundary encompassed emissions

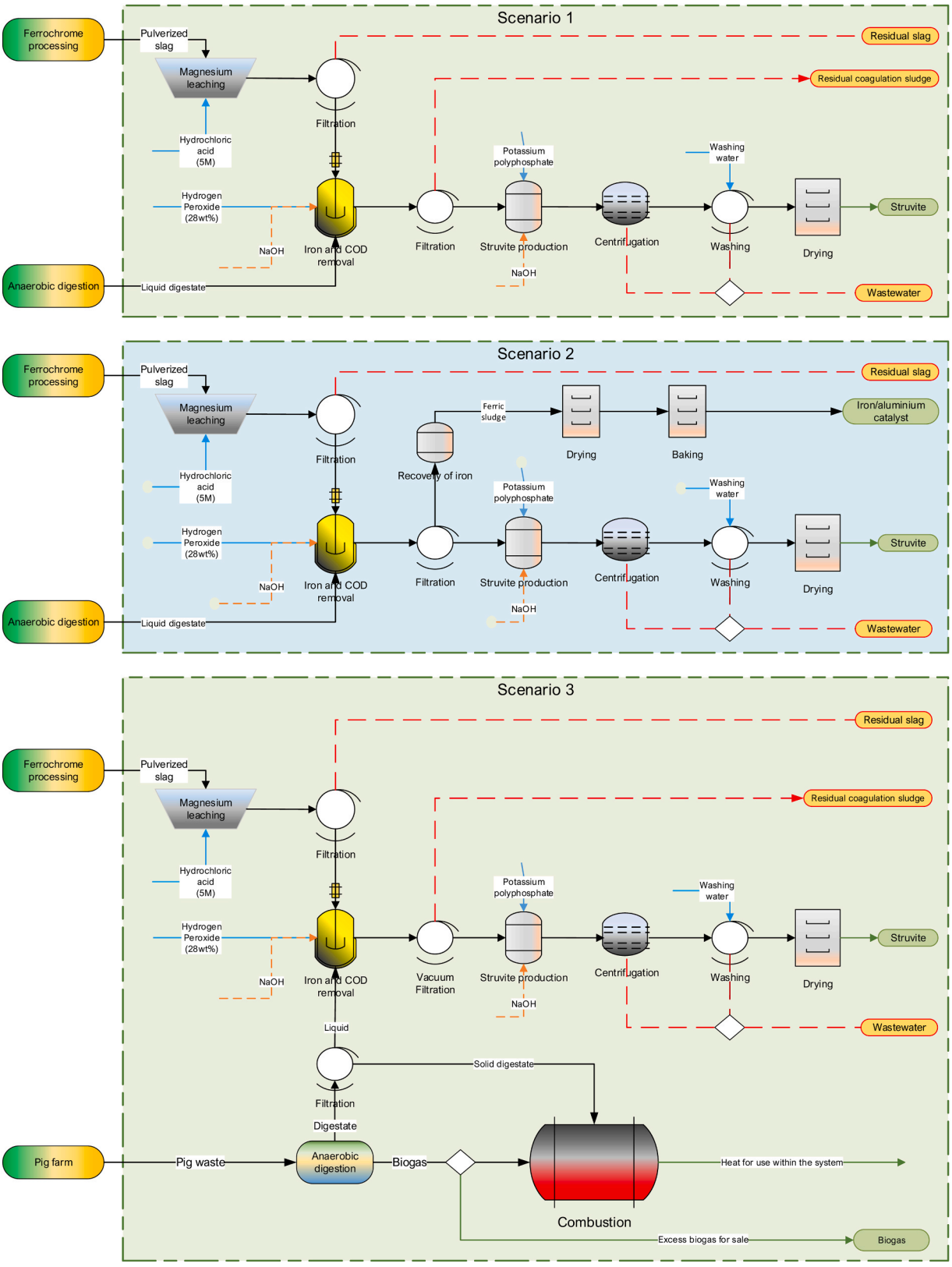

Fig. 1. Process flow diagrams for Scenarios 1–3, where Scenario 1 is the recovery of phosphorus as struvite, Scenario 2 is the recovery of struvite and an iron/aluminium catalyst, and Scenario 3 is the co-production of struvite and biogas on a pig farm.

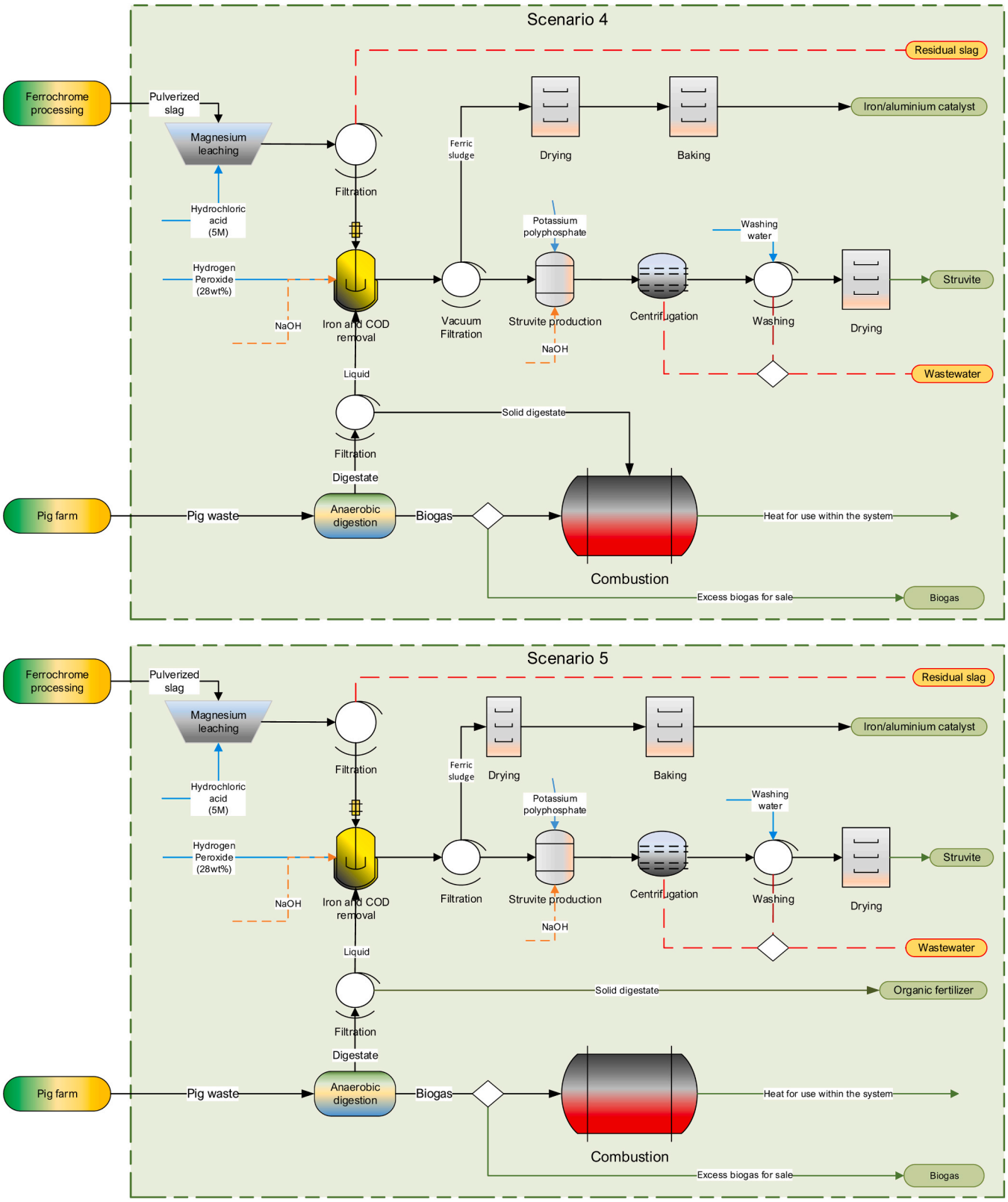

Fig. 2. Process flow diagrams for Scenarios 4 and 5, where Scenario 4 is onsite biogas production with co-recovery of phosphorus as struvite and aluminium and iron as a catalyst, and Scenario 5 is onsite co-production of biogas and organic fertilizer with co-recovery of phosphorus as struvite and aluminium and iron as a catalyst.

associated with transporting the slag from the ferrochrome plant, transporting digestate from a pig farm digester, pulverizing the slag to −75 μm, leaching the magnesium ions from the slag, removal of iron and COD using a Fenton process, precipitation of the struvite, and downstream processing to get the struvite (centrifugation, washing, and drying) and iron/aluminium catalyst. Emissions due to the disposal of the residual slag, the generated process wastewater, and boiler ash were also considered. While further processing of the wastewater would be

ideal for water recirculation, in this study, it was assumed that the wastewater would be pumped into the municipal drainage system. The slag and digestate were assumed to be input streams that do not have emissions associated with them, but rather, avoided emissions that would otherwise arise from their disposal, but these were neglected in the calculations. Emissions associated with all chemicals used and the water for washing were adopted from the ecoinvent database and included as part of the analysis. Energy consumption associated with processes such as heating, mixing, centrifugation, and drying was included, while emissions associated with equipment production were neglected. In Scenarios 3–5, the system boundaries were extended to include anaerobic digestion of pig waste and banana peel since the struvite was assumed to be produced onsite at a pig farm. Nonetheless, emissions associated with pig farming were not included, while the pig waste and banana peel were evaluated as inputs without emissions since these are diverted waste streams that would otherwise need disposal. The input material flows per kg of FCS used were used in calculating environmental impacts per kg of FCS using the ReCiPe midpoint (H) method in SimaPro. For Scenarios that produced other products in addition to the struvite, economic allocation was used to distribute impacts between the products.

Results and discussion

Technical performance

The study was carried out to assess the technical and economic feasibility, together with the potential environmental impacts associated with the recovery of struvite from pig waste-derived digestate using ferrochrome slag as a magnesium source. A summary of the input material, utilities, and products is presented in Table 1. While scenarios 1 and 2 were focused on off-site production of struvite, scenarios 3–5 considered production of the struvite on-site at the pig farm, thus adding biogas and digestate as products in addition to on-site production of steam, which was used for process heating purposes. The techno-economic evaluation suggests that it is possible to recover struvite, an iron/aluminium catalyst, biogas, and a solid organic fertilizer from PW, FCS, and BP. All 5 scenarios are capable of producing 364.56 kg of struvite per hour from the utilization of 8000 liters of pig waste digestate and 400 kg of slag.

Considering that the main motive behind the development of strategies for struvite recovery via co-utilization of PW and FCS is waste minimization and the conservation of resources, an analysis of resource consumption between the scenarios was made. One major input whose consumption needs to be addressed is hydrochloric acid which would be used as the leaching agent for extracting magnesium from FCS. Since all the scenarios were designed to extract magnesium from 400 kg of FCS using 100 ml of HCl per gram of FCS, an equal amount of the acid is consumed in all Scenarios. However, its contributions to operating costs and environmental impacts are quite significant. It is therefore imperative to consider initiatives that reduce acid consumption or pursue alternative magnesium recovery methods.

Since silica and magnesium are the major constituents of the FCS (Moyo et al., 2022a), one potential method for reducing acid consumption is the two-stage method developed by Prasetyo et al. (2021) wherein, silica is first extracted using alkali fusion at 1 000 °C followed by leaching with water at 100 °C, then acid leaching at 80 °C. Although the method could potentially reduce acid consumption by first reducing the silica content, there could be implications in terms of energy consumption, especially due to the high temperature at which silica is extracted. It may be necessary, therefore, to assess the cost benefits of the method. Other promising methods include using organic acids such as acetic acid (Raza et al., 2016), microwave-assisted leaching (Ghaderi and Zhang, 2025), and ultrasonication (Liu et al., 2024a; Peng et al., 2020).

In terms of the technical performance of the assessed scenarios, another resource that needs monitoring is electricity. While electricity consumption is least when struvite is the only recovered product, recovery of the iron/aluminium catalyst in Scenario 2 increases the demand for electricity by two-fold compared to Scenario 1, whereas for onsite co-recovery of the struvite and biogas, recovering the catalyst increases electricity consumption by 27 % between Scenarios 3 and 4. There is a general increase in power consumption with the recovery of more products, mainly attributable to the drying and baking of the catalyst, accounting for 51 %, 21 %, and 21 % of the total electricity demand in Scenarios 2, 4, and 5, respectively. It was assumed that the drying and baking processes for catalyst recovery would be electricity-driven in all Scenarios; however, Scenarios 3–5 produce biogas and solid digestate that can be combusted to generate steam and/or electricity for use in the recovery process, and potentially reduce the reliance on grid electricity. Other alternatives for reducing energy consumption would be microwave and ultrasonic-assisted leaching of the magnesium. Nonetheless, the actual savings in terms of cost would need to be calculated. Although unavoidable, banana peel shredding and slag pulverization are processes that also have significant contributions to electricity consumption. Interventions that could reduce electricity consumption in those sections would need to be evaluated.

Economic viability

Summarized capital and operating expenses are presented in Tables 2 and 3, respectively. A general increase in the required capital investment is observed as the number of products recovered increases from Scenario 1 through to Scenario 5. Nonetheless, the capital requirements for Scenario 5, which has solid digestate as an added product for sale, are less than those for Scenario 4, and this can be explained by

Table 1
Mass flows for input and product streams based on a 400 kg slag plant capacity.

	Scenario 1	Scenario 2	Scenario 3	Scenario 4	Scenario 5
Input raw materials					
Pig waste, kg/h	-	-	10, 000	10,000	10,000
Banana peel, kg/h	-	-	1200	1200	1200
Slag, kg/h	400	400	400	400	400
5 M Hydrochloric acid, kg/h	4000	4000	4000	4000	4000
Hydrogen peroxide, kg/h	17.06	17.06	17.06	17.06	17.06
Potassium polyphosphate, kg/h	53.42	53.42	53.42	53.42	53.42
Caustic, kg/h	2.98	2.98	7.86	7.86	7.86
Electricity, MW	0.61	1.24	2.33	2.96	2.96
Process water, kg/h	188.92	188.92	423.42	423.42	423.42
Products					
Struvite, kg/h	364.56	364.56	364.56	364.56	364.56
Iron/aluminium catalyst, kg/h	-	62.02	-	62.02	62.02
Biogas for sale, m^3/hr	-	-	486.09	486.09	343.48
Solid digestate as fertilizer	-	-	-	-	865.35

Table 2
Summary estimates of capital costs for the 5 assessed scenarios.

COST ESTIMATES (USD)	Scenario 1	Scenario 2	Scenario 3	Scenario 4	Scenario 5
Feedstock handling	442,872	442,872	472,727	472,727	472 727
Slag leaching	969,857	969,857	969,857	969,857	969,857
COD and iron reduction	909,547	909,547	909,547	909,547	909,547
Struvite precipitation and recovery	224,445	224,445	224,445	224,445	224,445
Iron/aluminium catalyst recovery	-	939,871	-	939,871	939,871
Anaerobic digestion	-	-	396,767	396,767	396,767
Storage	246,968	246,968	246,968	246,968	246,968
Boiler	-	-	659,800	659,800	565,299
Utilities	255,266	255,266	364,880	364,880	364,880
Total installed cost (USD)	**3,048,955**	**3,988,826**	**4,244,991**	**5,184,862**	**5,090,361**
Warehouse (4.0 % of ISBL)	101,869	139,464	103,063	140,658	140,658
Site Development (9.0 % of ISBL)	229,205	313,793	231,892	316,480	316,480
Additional Piping (4.5 % of ISBL)	114,602	156,897	115,946	158,240	158,240
Total Direct Costs (TDC) (USD)	**3,494,631**	**4 598 980**	**4,695,892**	**5,800,241**	**5,705,739**
Prorateable Expenses (10.0 % of TDC)	349,463	459,898	469,589	580,024	570,574
Field Expenses (10.0 % of TDC)	349,463	459,898	469,589	580,024	570,574
Home Office & Construction Fee (20.0 % of TDC)	698,926	919,796	939,178	1,160,048	1,141,148
Project Contingency (10 % of TDC)	349,463	459,898	469,589	580,024	570,574
Other Costs (Start-Up, Permits, etc.) (10.0 % of TDC)	349,463	459,898	469,589	580,024	570,574
Total Indirect Costs (USD)	**2,096,778**	**2,759,388**	**2,817,535**	**3,480,144**	**3,423,444**
Fixed Capital Investment (FCI) (USD)	**5,591,409**	**7,358,368**	**7,513,427**	**9,280,385**	**9,129,783**
Working Capital (5.0 % of FCI)	279,571	367,918	375,671	464,019	456,459
Total Capital Investment (TCI) (USD0	**5,870,980**	**7,726,286**	**7,889,099**	**9,744,404**	**9,585,642**

Table 3
Estimates of production costs for the 5 struvite production scenarios.

Operating cost estimates (USD)	Scenario 1	Scenario 2	Scenario 3	Scenario 4	Scenario 5
Feedstock	211,065	211,065	211,065	211,065	211,065
Hydrochloric acid	2,311,665	2,311,665	2,311,665	2,311,665	2,311,665
Hydrogen peroxide	73,194	73,194	73,194	73,194	73,194
Caustic	8,770	8,770	23,927	23,927	23,927
Potassium polyphosphate	62,429	62,429	62,429	62,429	62,429
Disposal of residual sludge	73,385	-	-	-	-
Boiler Chemicals	-	-	1,260	1,260	1,028
Process makeup Water	363	492	728	813	756
Disposal of residual slag and boiler ash	109,011	109,011	123,562	118,011	109,011
Grid Electricity	518,706	1,061,595	1,976,116	2,428,084	2,342,587
Total Variable Operating Costs	**3,368,588**	**3,838,221**	**4,783,946**	**5,230,448**	**5,135,662**
Total Salaries	900,031	944,569	989,106	1,033,643	1,078,180
Labor Burden (90 % of total salaries)	810,028	850,112	890,195	930,279	970,362
Maintenance (3 % of ISBL)	76,402	104,598	77,297	105,493	105,493
Property Insurance and Tax (0.7 % of FCI)	39,140	51,509	52,594	64,963	63,904
Total Fixed Operating Costs	**1,825,601**	**1,950,788**	**2,009,192**	**2,134 377**	**2,217,939**
Total Operating Costs	**5,194,189**	**5,789,009**	**6,793,138**	**7,364 825**	**7,353,601**

the differences in boiler requirements. In Scenario 5, the boiler section only uses the biogas as fuel for steam production.

Across all 5 scenarios, the greatest contribution to capital expenses is made by the slag leaching section, contributing 19 % in Scenario 5 and 32 % in Scenario 1. The significant contributions are attributed to the high volumes of acid solution used (1 g of slag to 40 ml of acid solution), and the selected material (stainless steel) which is considerably pricey due to its inherent properties. Should the acid consumption be reduced, for instance through the methods discussed in section 3.1, there is an opportunity for a reduction in the capital expenses. Other sections with significant contributions to the capital requirements are catalyst recovery, iron and COD reduction, and the boiler.

Operating costs increased from Scenarios 1–5 (Table 3 and Fig. 3a), mainly attributable to the increase in labor requirements and electricity consumption with the recovery of more products. The 5 scenarios were designed to process the same amount of feedstock and recover the same amount of struvite but with the recovery of biogas, digestate, and iron/aluminium catalysts as additional products for different scenarios. Accordingly, the feedstock costs and the costs of consumable materials are the same across all scenarios. Major differences in the variable costs are attributed to waste disposal charges as well as water and electricity consumption, while differences in the fixed costs are due to different labor and maintenance requirements attributable to the addition of sections for the recovery of more products.

Considering that Scenarios 3–5, where electricity contributes considerably (10–32 %) to the operating costs, are onsite processes that also have biogas and digestate as co-products, it may be necessary to evaluate the feasibility of converting the biogas to combined heat and power. On-site production of power could potentially reduce the reliance on grid electricity, and most probably, reduce the operating costs. However, the actual cost benefits need to be assessed.

In terms of profitability, two indicators were evaluated: the NPV and MPSP. An investment is profitable if the net present value is positive. The profitability of the evaluated scenarios was evaluated using base product prices of $0.50, $1.00, $0.50, and $0.25 per kg of struvite, catalyst, biogas, and organic fertilizer (digestate), respectively. At the stated base prices for the evaluated products, none of the scenarios can be considered profitable since the NPVs are all less than zero. The results corroborate well with the conclusion made by Li et al. (2019) that struvite production is not economically feasible, however, it is worth considering given the environmental benefits it could bring. Overall, the profitability of the scenarios improves from Scenario 1–5, with Scenario 5 being the most preferable option, with an NPV of $ −8.00 million. Considering that the main difference between Scenarios 4 and 5 is the

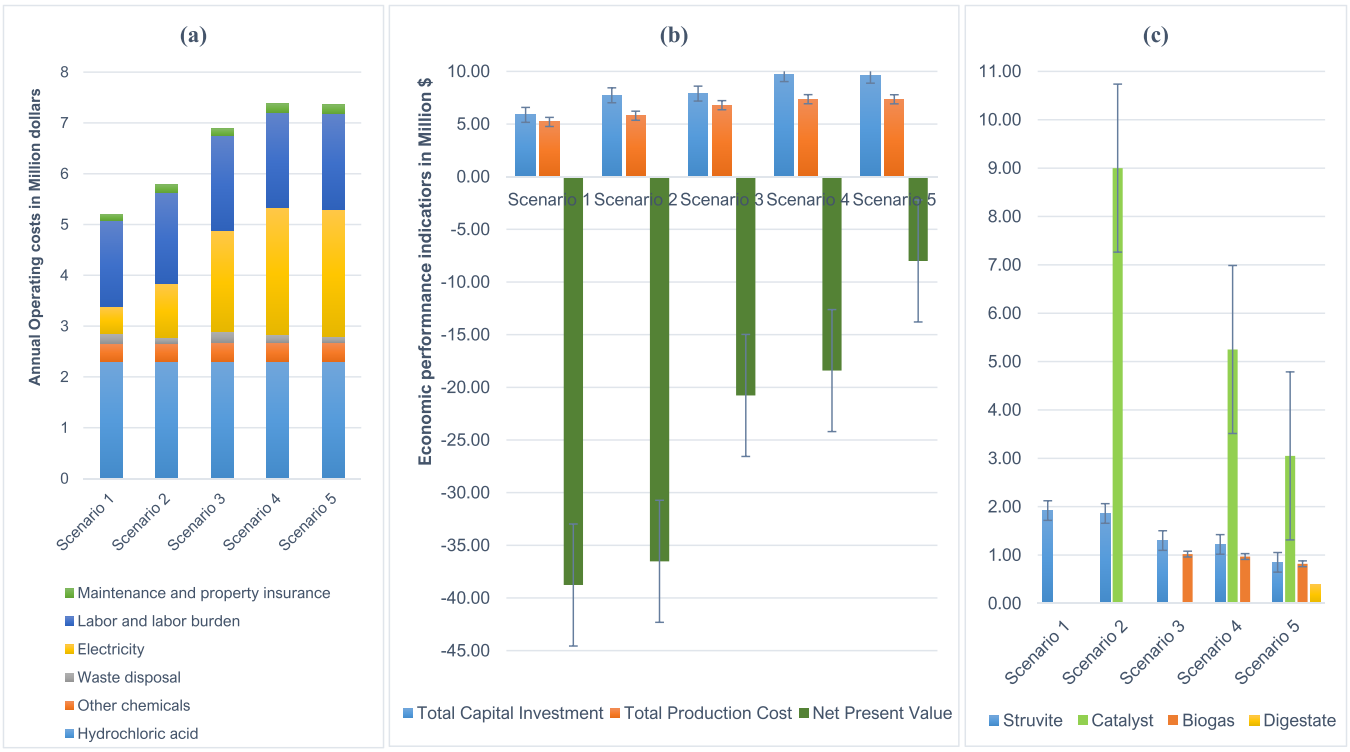

Fig. 3. Indicators of economic performance for the assessed struvite production scenarios; (a) contributions to operating costs, (b) total capital and operating costs and the NPV, and (c) Minimum product selling prices.

fact that the digestate is sold as an organic fertilizer in Scenario 5, whereas it is combusted together with the biogas in Scenario 4, it can be concluded that it is more economical to combust biogas only and sell the digestate as fertilizer. Nonetheless, there is a need for a more rigorous characterization of the digestate to understand its benefits as a fertilizer and also assess the environmental repercussions of utilizing the digestate in agriculture.

Comparing scenarios 2 and 3, which are both focused on co-recovering a second product with the struvite wherein, the second product is an iron/aluminium catalyst in Scenario 2 and biogas in Scenario 3, it can be concluded that the onsite recovery of struvite is more favorable compared to outsourcing the digestate. Although the catalyst is a more valuable product than biogas in terms of market prices, biogas recovery offers the advantages of being an energy career which could potentially reduce the energy demand of the process while the catalyst on the other hand, will increase the energy requirements.

The MPSPs for the products decrease from Scenarios 1–5 (Fig. 3c), attributable to the recovery of more products, again, leading to the conclusion that Scenario 5 is the best option. The attractiveness of Scenario 5 is supported by its lowest MPSPs for struvite, catalyst, and biogas compared to all other scenarios. Co-recovering struvite with the iron/aluminium catalyst (Scenario 2) results in a 2 % decrease in the struvite MPSP (Scenario 1), however, the MPSP for the catalyst will be exorbitant ($9.00/kg) compared to the base price of $1.00/kg. A 32 % reduction in the struvite MPSP is experienced when co-producing struvite with biogas (Scenario 3) compared to recovering only struvite (Scenario 1), but, with the biogas selling at double the base price of $0.50/kg. Scenario 3 is thus, a fairly better alternative compared to Scenario 2, in terms of profitability, offering lower product prices, and a higher NPV.

The study also sought to assess if it is economical to recover the iron and aluminium components in the FCS in addition to magnesium. The MPSP for the catalyst is not attractive for all the 3 scenarios that considered catalyst recovery because the prices are higher than the base selling price. Nonetheless, co-recovering the catalyst with other products like biogas in Scenario 4, and biogas and digestate in Scenario 5, in addition to the struvite, reduces the MPSPs for both the catalyst and the struvite. Still, none of the products can be sold at a price lower than the base market price and this implies that the proposed processes are not economically viable at the prevailing product market prices. This is further supported by the NPVs which are less than zero for all the 5 assessed scenarios. It is therefore critical to consider alternative processing pathways that seek to improve the economic performance of struvite recovery processes. Some of the alternative processes were mentioned in section 3.1.

Sensitivity analysis

The profitability of an investment is influenced by the capital and operating cost requirements together with the revenue flows. Uncertainties in the profitability of the assessed scenarios could arise from variations in the capital costs, operating expenses, and product selling prices. Accordingly, total capital requirements, production costs, and product prices (struvite, catalyst, digestate, and biogas), were varied within 50 % so as to determine their impact on the NPV as an indicator of the profitability. Considering that the cost of hydrochloric acid and labor had the greatest influence on the total production costs, their impact on the NPV was also separately assessed. The results on the impact of the mentioned parameters are presented in Fig. 4.

Overall, the use of FCS as a magnesium source in struvite precipitation is economically discouraging unless strategies are put in place to reduce the cost of production. Variations in the TPC have the greatest impact on the NPV for all Scenarios (Fig. 4), wherein a 50 % reduction in the TPC renders Scenarios 3–5 profitable. With the major contributors to the TPC being labor requirements and the cost of HCl (Fig. 3a), it may be necessary to consider inventions that minimize labor costs and/or the consumption of HCl. Labor costs may be reduced by process optimization and automation which could minimize human interventions. To reduce the cost implication of hydrochloric acid, it may be necessary to consider more affordable magnesium sources or extraction methods.

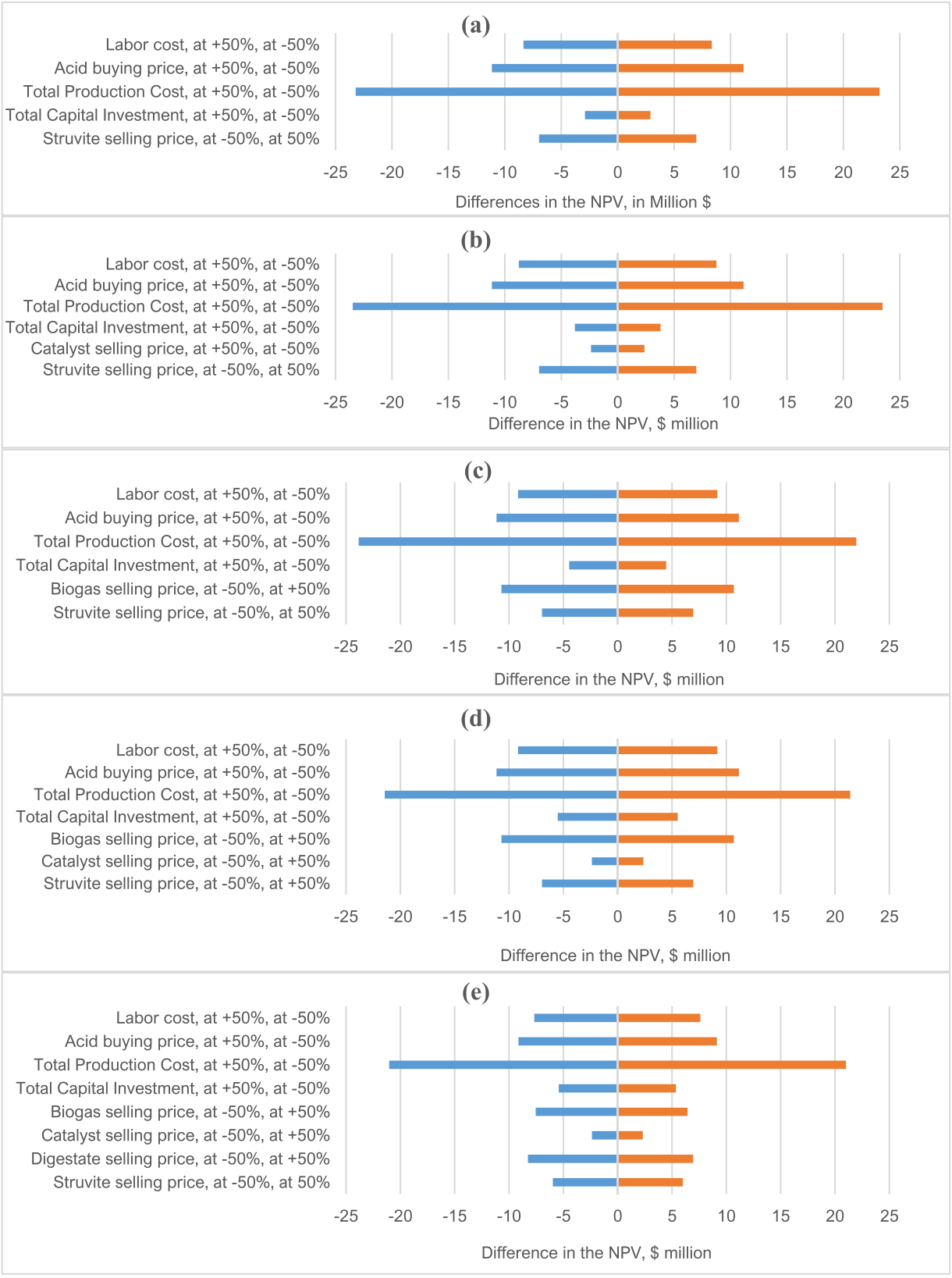

Fig. 4. Variations in the NPVs in response to fluctuations in selected input parameters, (a) Scenario 1, NPV = -$ 38.77 million, (b) Scenario 2, NPV = -$ 36.52 million, (c) Scenario 3, NPV = -$ 20.77 million, (d) Scenario 4, NPV = -$ 18.41 million, and (e) Scenario 5, NPV = -$ 8.00 million.

While the study sought to evaluate the benefits of using slag as an alternative magnesium source, the cost implication of the process, especially in the form of acid consumption is prohibitive. If slag should be used as a magnesium source, then alternative and more affordable methods of extraction need to be evaluated. Some of the promising extraction routes include using organic acids such as acetic acid (Raza et al., 2016), microwave-assisted leaching (Ghaderi and Zhang, 2025), and ultrasonication (Liu et al., 2024a; Peng et al., 2020). Otherwise, more affordable magnesium must be considered.

Two of the most widely used commercial magnesium sources for struvite production are magnesium chloride and magnesium sulfate, which are deemed too expensive. While a cheaper commercial option is magnesium oxide, however, its major drawback is that it is sparingly soluble, which then requires additional solubilization steps or more reaction time to be effective, therefore impeding the full-scale operation of struvite production (Rodrigues et al., 2022). In this regard, to reduce the chemical costs of struvite synthesis, some researchers have explored the utilization of low-cost magnesium sources, such as magnesite (Xu et al., 2015), seawater (Aguado et al., 2019), magnesium alloy (Huang et al., 2017), as well as sea salt, and bittern (Rodrigues et al., 2022).

Among these sources, sea salt is the most promising due to its high availability and excessive Mg concentration (1272 mg/L). Sea salt has been demonstrated to successfully remove 81 % of orthophosphate at pH 10 from pig manure (Fattah et al., 2022) thus suggesting its potential as a magnesium source in struvite recovery. However, due to the high NaCl content and presence of other foreign ions in seawater such as calcium, by-products are likely to be formed simultaneously with the struvite which compromises the quality of the product, separation of these components can prove to be a nuisance, and costly.

Environmental impacts

The adopted method for evaluating the environmental impacts of struvite recovery scenarios generated results for 18 impact categories (Table 4). It was assumed that for off-site production of struvite, the digestate and slag would be transported within a distance of 100 km by road, whereas for onsite production, pig manure would be collected on the pig farm and anaerobically digested to produce biogas and digestate. The digestate is then separated into a liquid digestate for use in struvite recovery while the solids can be dried and co-combusted with the biogas in a boiler to produce steam or sold as an organic fertilizer (Scenario 5). Transporting the digestate from the pig farm to an off-site struvite recovery increases the environmental impacts, for instance, in both Scenarios 1 and 2, digestate transportation contributes 4.24 kg CO_2 eq. and 1.34 kg oil eq. per kg of slag processed to the GWP and FRS categories, respectively (Fig. 5). It can be concluded that it is better for pig farms that have already adopted anaerobic digestion for manure management to consider onsite struvite recovery than a stand-alone investor who will have to buy and transport digestate to an off-site facility.

Table 4 also indicates that extracting more value from the processes reduces the environmental impacts, for example, the terrestrial ecotoxicity which is shown to be high for Scenarios 1 and 2 at 66.21 and 66.22 kg 1,4-DCB respectively, reduces to about 37.42 kg 1,4-DCB for Scenario 3,4 and 5. In this regard, value addition or minimizing the waste from processes is critical to reducing the environmental impacts. A similar trend is observed for the human non-carcinogenic toxicity which reduces from 17.18 kg 1,4-DCB in Scenarios 1 and 2 to about 9.75 kg 1,4-DCB in Scenarios 3,4 and 5. The same conclusion can be drawn from an analysis of the environmental impacts associated with the recovery of the different products as presented in Fig. 6. An economic allocation was used to allocate the environmental burdens of the products as calculated per kg of slag processed. Recovery of more products in addition to the struvite reduces the impacts of struvite by about 10-fold for all impacts. Similar trends are observed for all other products. For instance, the GWP for struvite reduces from 10.74 kg CO_2 eq. per kg of struvite in Scenario 1–1.81 kg CO_2 eq. per kg of struvite in Scenario 5 (Fig. 6). Considering that, in general, the environmental impacts for the envisaged processes decrease with an increase in the number of products co-recovered from PW and FCS, it may be worth considering Scenario 5 as the best option (Fig. 5).

The review by Sena and Hicks (2018) highlighted that energy and chemical use in struvite recovery could have significant contributions. Thus, results from an analysis of the contributions of various material inputs to the processes for four of the main impact categories out of the 18 categories obtained from the ReCiPe 2016 (H) method are presented in Fig. 5. These results are more useful for the identification of hotspot processes or input materials. The slag leaching process, mainly characterized by the use of hydrochloric acid for leaching magnesium from ferrochrome slag proves to be a nuisance in all investigated scenarios, contributing more than 50 % to all impact categories across the 5 scenarios (Fig. 5). This entails that a more environmentally friendly magnesium source, leaching solution, or method can be favorable, for instance, the use of organic acids or a mixture of inorganic and organic acids to reduce the detrimental effects of HCl (Liu et al., 2024b; Raza et al., 2016).

Study limitations and requisite further research

The study assessed the economic and environmental feasibility of five possible scenarios for recovering phosphorus as struvite from pig waste using FCS as a magnesium source. The processes were developed based on laboratory work on PW digestion and FCS leaching using

Table 4
Summary of total environmental impacts for the five assessed scenarios.

Impact category	Unit	Scenario 1	Scenario 2	Scenario 3	Scenario 4	Scenario 5
Global warming	kg CO_2 eq	10.74512	10.74698	6.52899	6.53145	6.53145
Stratospheric ozone depletion	kg CFC11 eq	0.00001	0.00001	0.00001	0.00001	0.00001
Ionizing radiation	kBq Co−60 eq	0.60330	0.60337	0.48199	0.48208	0.48208
Ozone formation, Human health	kg NOx eq	0.03513	0.03514	0.01625	0.01626	0.01626
Fine particulate matter formation	kg PM2.5 eq	0.02125	0.02126	0.01471	0.01472	0.01472
Ozone formation, Terrestrial ecosystems	kg NOx eq	0.03595	0.03595	0.01647	0.01648	0.01648
Terrestrial acidification	kg SO2 eq	0.03999	0.04001	0.02568	0.02570	0.02570
Freshwater eutrophication	kg P eq	0.00447	0.00447	0.00335	0.00336	0.00336
Marine eutrophication	kg N eq	0.00029	0.00029	0.00025	0.00025	0.00025
Terrestrial ecotoxicity	kg 1,4-DCB	66.21803	66.21976	37.42108	37.42339	37.42339
Freshwater ecotoxicity	kg 1,4-DCB	0.77630	0.77634	0.46521	0.46527	0.46527
Marine ecotoxicity	kg 1,4-DCB	1.03348	1.03354	0.61159	0.61167	0.61167
Human carcinogenic toxicity	kg 1,4-DCB	0.91302	0.91315	0.60942	0.60959	0.60959
Human non-carcinogenic toxicity	kg 1,4-DCB	17.18108	17.18322	9.75412	9.75697	9.75697
Land use	m2a crop eq	0.37148	0.37150	0.21508	0.21511	0.21511
Mineral resource scarcity	kg Cu eq	0.05410	0.05410	0.03624	0.03624	0.03624
Fossil resource scarcity	kg oil eq	3.12785	3.12840	1.75419	1.75492	1.75492
Water consumption	m^3	0.14889	0.14890	0.13878	0.13878	0.13878

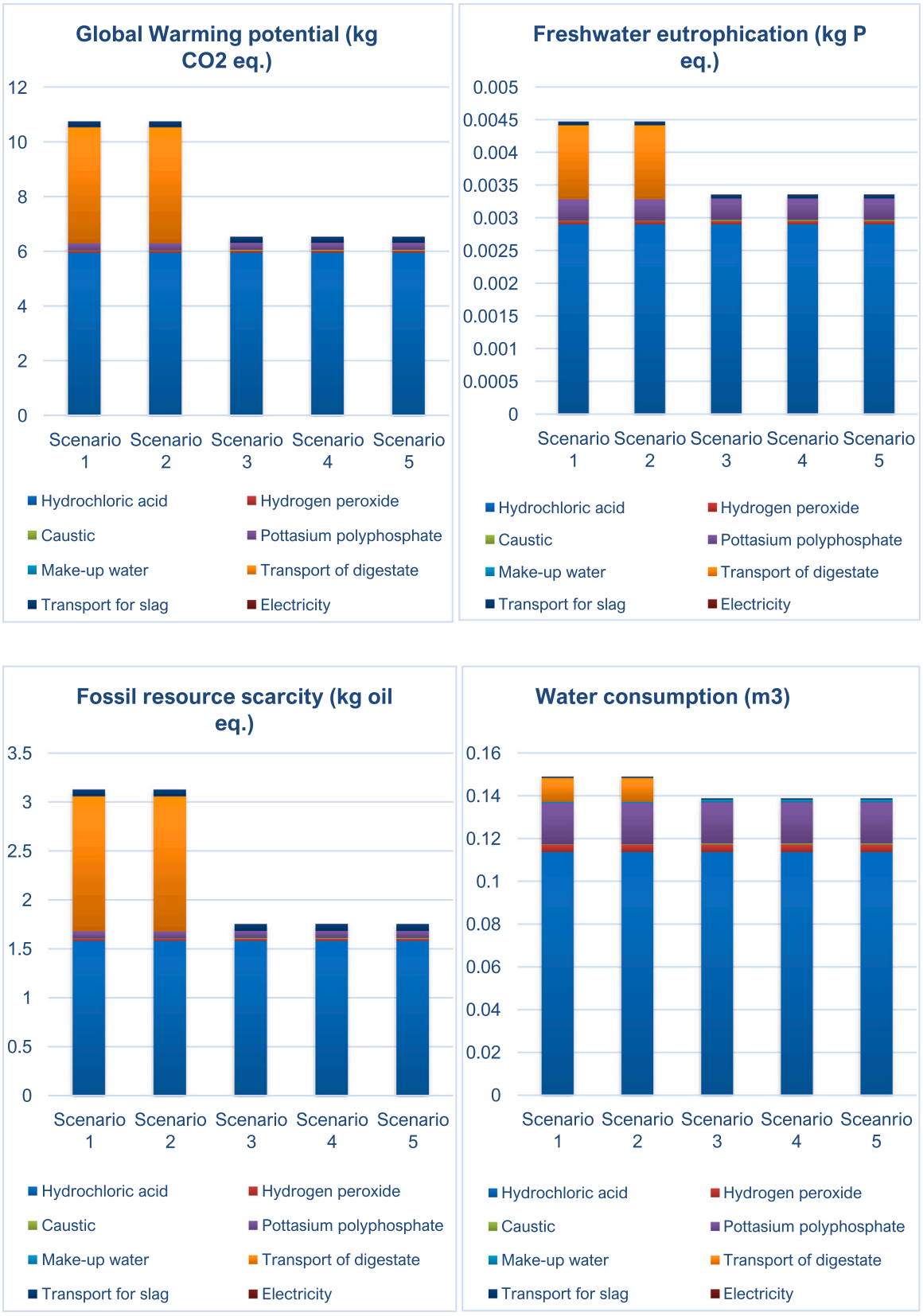

Fig. 5. Environmental impacts associated with the various input streams.

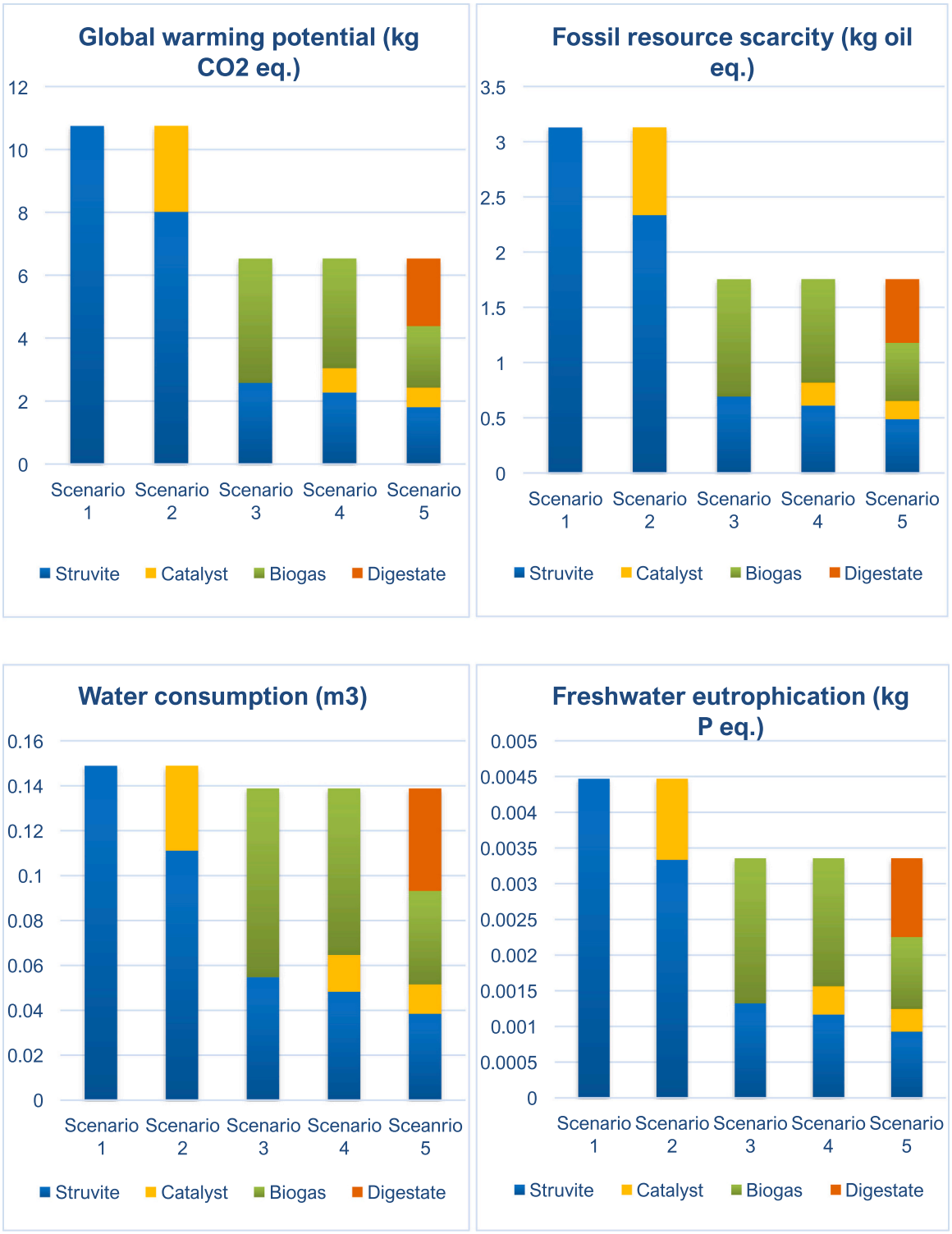

Fig. 6. Environmental impacts associated with the various products using economic allocation.

hydrochloric acid. While the process models demonstrate the feasibility of the envisaged processes, it may be worth carrying out pilot-scale trials to determine the actual product yields and qualities and hence economic value.

Hydrochloric acid is highly corrosive, costly, and not environmentally friendly, thus making the developed processes unattractive in terms of economic and environmental performance. In this regard, it is proposed that further research be conducted on pre-leaching the FCS using organic acids produced during the anaerobic digestion of pig waste and thereafter using HCl. This co-leaching is envisaged to decrease the amount of HCl that will be used, inherently reducing leaching costs and making the process more environmentally friendly (Astuti et al., 2023; Gao et al., 2024; Oke et al., 2024). Research has demonstrated that it may be feasible to regenerate hydrochloric acid (McKinley and Ghahreman, 2018), thus, further research may evaluate the technical feasibility as well as the economic and environmental savings of reclaiming and recycling the acid used during FCS leaching.

The system boundaries for environmental performance analysis were

set such that the products' use stage was not considered. More rigorous analysis, taking into consideration product use and avoided emissions due to the use of FCS and PW, can potentially provide more useful information on the actual benefits of the proposed processes. Further research may focus on rigorous evaluations and compare the benefits of the developed processes to conventional fertilizer production and use, as well as comparing the benefits over processes that use conventional magnesium and phosphorus sources.

Conclusion

The study evaluated the economic viability and environmental impacts of five different scenarios for recovering nutrients (phosphorus and nitrogen) from pig manure via anaerobic digestion and precipitation as struvite using ferrochrome slag as a magnesium source. The study demonstrates that the recovery of struvite in conjunction with iron/aluminium catalysts, biogas, and digestate significantly enhances both the economic viability and environmental sustainability of nutrient recovery processes. The integration of these materials not only reduces the overall costs associated with struvite recovery but also minimizes environmental impacts associated with the struvite product. For instance, when struvite is the only product (Scenario 1), the NPV is -$38 million whereas the NPV increases to -$8 million if catalyst, biogas, and digestate are also recovered as co-products (Scenario 5). Similarly, the MPSP and GWP for struvite decrease from $1.92 and 10.74 m CO_2 eq. per kg struvite in Scenario 1 to $0.85 and 1.81 m CO_2 eq. per kg struvite in Scenario 5. Summarily, processes that focus on the onsite production of struvite while recovering biogas and other valuable components from slag are preferable compared to offsite production focusing on struvite recovery only. Overall, Scenario 5 is the most preferable option in terms of both the economic viability and environmental impacts as it presents the lowest impacts per kg of struvite produced.

The findings underscore the importance of holistic strategies in waste management and nutrient recovery, paving the way for more sustainable agricultural practices and resource management. Future research should focus on developing alternative methods for magnesium extraction to further improve the efficiency, cost-effectiveness, and environmental sustainability of struvite recovery processes. Regulations and standards for the quality of the recovered struvite and other products are critical to facilitate their use in agriculture while ensuring safety and environmental protection. Policies that encourage circular economy principles could be reinforced, promoting the recycling of nutrients and reducing reliance on synthetic fertilizers.

CRediT authorship contribution statement

Langa Bright Moyo: Writing – review & editing, Methodology, Investigation, Formal analysis, Conceptualization. **Geoffrey S. Simate:** Writing – review & editing, Validation, Supervision, Formal analysis. **Tariro Tecla Manhongo:** Writing – original draft, Validation, Software, Methodology, Investigation, Formal analysis, Conceptualization.

Declaration of Competing Interest

The authors declare that they have no known competing financial interests or personal relationships that could have appeared to influence the work reported in this paper.

Data availability

Data will be made available on request.

References

Aguado, D., Barat, R., Bouzas, A., Seco, A., Ferrer, J., 2019. P-recovery in a pilot-scale struvite crystallisation reactor for source separated urine systems using seawater and magnesium chloride as magnesium sources. Sci. Total Environ. 672, 88–96. https://doi.org/10.1016/j.scitotenv.2019.03.485.

Al-Mallahi, J., Sürmeli, R.Ö., Çalli, B., 2020. Recovery of phosphorus from liquid digestate using waste magnesite dust. J. Clean. Prod. 272. https://doi.org/10.1016/j.jclepro.2020.122616.

Al-Shammary, A.A.G., Al-Shihmani, L.S.S., Fernández-Gálvez, J., Caballero-Calvo, A., 2024. Optimizing sustainable agriculture: a comprehensive review of agronomic practices and their impacts on soil attributes. J. Environ. Manag. 364. https://doi.org/10.1016/j.jenvman.2024.121487.

Aryal, J.P., Sapkota, T.B., Krupnik, T.J., Rahut, D.B., Jat, M.L., Stirling, C.M., 2021. Factors affecting farmers' use of organic and inorganic fertilizers in South Asia. Environ. Sci. Pollut. Res. 28, 51480–51496. https://doi.org/10.1007/s11356-021-13975-7.

Astuti, W., Nurjaman, F., Rofiek, F., Sumardi, S., Avista, D., 2023. A novel method : Nickel and cobalt extraction from citric acid leaching solution of nickel laterite ores using oxalate precipitation. Miner. Eng. 191, 107982. https://doi.org/10.1016/j.mineng.2022.107982.

Cao, G. min, Sheng, M., Niu, W. feng, Fei, Y. lei, Li, D., 2009. Regeneration and reuse of iron catalyst for Fenton-like reactions. J. Hazard. Mater. 172, 1446–1449. https://doi.org/10.1016/j.jhazmat.2009.08.010.

Chandrasekaran, S., Zaffar, A., Balasubramanian, P., 2024. Struvite in circular economy: production techniques, emerging applications and market opportunities. Wiley Interdiscip. Rev. Energy Environ. 13. https://doi.org/10.1002/wene.529.

Davis, R., Grundl, N., Tao, L., Biddy, M.J., Tan, E.C.D., Beckham, G.T., Humbird, D., Thompson, D.N., Roni, M.S., 2018. Process design and economics for the conversion of lignocellulosic biomass to hydrocarbon fuels and coproducts. Biochem. Des. Case Update Tech. Rep. 2018. NREL/TP-5100-71949.

Davis, A.G., Huggins, D.R., Reganold, J.P., 2023. Linking soil health and ecological resilience to achieve agricultural sustainability. Front. Ecol. Environ. 21, 131–139. https://doi.org/10.1002/fee.2594.

Fattah, K.P., Sinno, S., Atabay, S., Khan, Z., 2022. Impact of Magnesium Sources for Phosphate Recovery and/or Removal from Waste. Energies 15, 4585. https://doi.org/10.3390/en15134585.

Finkbeiner, M., 2014. The international standards as the constitution of life cycle assessment. ISO 14040 Ser. Offspring 85–106. https://doi.org/10.1007/978-94-017-8697-3_3.

Gao, R., Peng, H., He, Q., Meng, Z., Xiang, P., Hou, L., 2024. Simultaneous leaching of Li, Ga, and REEs from coal fly ash and a novel method for selective leaching of Li and Ga. J. Environ. Chem. Eng. 12, 112022. https://doi.org/10.1016/j.jece.2024.112022.

Gaworski, M., Jabłoński, S., Pawlaczyk-Graja, I., Ziewiecki, R., Rutkowski, P., Wieczyńska, A., Gancarz, R., Łukaszewicz, M., 2017. Enhancing biogas plant production using pig manure and corn silage by adding wheat straw processed with liquid hot water and steam explosion. Biotechnol. Biofuels 10, 1–13. https://doi.org/10.1186/s13068-017-0922-x.

Ghaderi, S., Zhang, W., 2025. Microwave-assisted leaching of olivine: investigation of leaching characteristics and kinetics of Mg, Si, Fe, Co, and Ni. Miner. Eng. 228, 109344. https://doi.org/10.1016/j.mineng.2025.109344.

Guardian News, 2024. Zimbabwean president declares state of disaster due to drought. Gurdian.

Huang, H., Guo, G., Zhang, P., Zhang, D., Liu, J., Tang, S., 2017. Feasibility of physicochemical recovery of nutrients from swine wastewater: Evaluation of three kinds of magnesium sources. J. Taiwan Inst. Chem. Eng. 70, 209–218. https://doi.org/10.1016/j.jtice.2016.10.051.

Huzenko, M., Kononenko, S., 2024. Sustainable agriculture: impact on public health and sustainable development. Heal. Econ. Manag. Rev. 5, 125–150. https://doi.org/10.61093/hem.2024.2-08.

Kim, D., Hwang, S.J., Bae, S.H., Ryoo, K.S., 2023. Recovery of ammonium nitrogen and phosphate from the piggery wastewater as struvite and its assessment for the reduction of water pollution through the field test. Korean J. Environ. Agric. 42, 83–92. https://doi.org/10.5338/KJEA.2023.42.2.11.

Lavanya, A., Ramesh, S.T., Nandhini, S., 2019. Phosphate recovery from swine wastewater by struvite precipitation and process optimization using response surface methodology. Desalin. Water Treat. 164, 134–143. https://doi.org/10.5004/dwt.2019.24447.

Li, B., Boiarkina, I., Yu, W., Huang, H.M., Munir, T., Wang, G.Q., Young, B.R., 2019. Phosphorous recovery through struvite crystallization: challenges for future design. Sci. Total Environ. 648, 1244–1256. https://doi.org/10.1016/j.scitotenv.2018.07.166.

Liu, L., Gan, M., Fan, X., Gao, Z., Sun, Z., Ji, Z., Wei, J., Ma, S., 2024a. Mechanism of ultrasonic enhanced acetic acid leaching of steel slag and synthesis of calcium carbonate whiskers. Sep. Purif. Technol. 339, 126615. https://doi.org/10.1016/j.seppur.2024.126615.

Liu, L., Gan, M., Fan, X., Gao, Z., Sun, Z., Ji, Z., Wei, J., Ma, S., 2024b. Mechanism of ultrasonic enhanced acetic acid efficiently leaching of steel slag and synthesis of calcium carbonate whiskers. Sep. Purif. Technol. 339, 126615. https://doi.org/10.1016/j.seppur.2024.126615.

Magrí, A., Company, E., Farrès, M., Ferrer, J., González, E., Domingo, F., Colprim, J., 2024. Recovery of potassium-rich struvite in a pig farm downstream a nitrogen removal treatment plant: technological, agricultural and economic assessment. Waste Biomass Valoriz. https://doi.org/10.1007/s12649-024-02812-w.

McKinley, C., Ghahreman, A., 2018. Hydrochloric acid regeneration in hydrometallurgical processes: a review. Miner. Process. Extr. Met. Trans. Inst. Min. Met. 127, 157–168. https://doi.org/10.1080/03719553.2017.1330839.

Moyo, L.B., Simate, G.S., Mamvura, T.A., 2022a. Magnesium recovery from ferrochrome slag: kinetics and possible use in a circular economy. Heliyon 8, e12176. https://doi.org/10.1016/j.heliyon.2022.e12176.

Moyo, L.B., Simate, G.S., Mutsatsa, T., 2022b. Biological acidification of pig manure using banana peel waste to improve the dissolution of particulate phosphorus: a critical step for maximum phosphorus recovery as struvite. Heliyon 8, e10091. https://doi.org/10.1016/j.heliyon.2022.e10091.

Moyo, L.B., Simate, G.S., Mamvura, T.A., Danha, G., 2023. Recovering phosphorus as struvite from anaerobic digestate of pig manure with ferrochrome slag as a magnesium source. Heliyon 9, e15506. https://doi.org/10.1016/j.heliyon.2023.e15506.

Nagarajan, A., Chen, Y., Raghavan, V., Goyette, B., Rajagopal, R., 2024. Sustainable nutrient recovery through struvite precipitation from poultry and multi-substrate agricultural waste digestates. Bioresour. Technol. Rep. 27, 101924. https://doi.org/10.1016/j.biteb.2024.101924.

Nagarajan, A., Goyette, B., Raghavan, V., Bhaskar, A., Rajagopal, R., 2023. Nutrient recovery via struvite production from livestock manure-digestate streams: towards closed loop bio-economy. Process Saf. Environ. Prot. 171, 273–288. https://doi.org/10.1016/j.psep.2023.01.006.

Ndlovu, E., Prinsloo, B., Roux, T., Africa, S., Africa, S., Ndlovu, E., 2020. Impact of climate change and variability on traditional farming systems: Farmers' perceptions from South-west, semi-arid Zimbabwe. Jàmbá J. Disaster Risk Stud. 12, 1–19. https://doi.org/10.4102/jamba.v12i1.742.

Ndlovu, N., Zenda, M., 2024. The impact of climate change on food security and natural resource management in smallholder crop farming systems at mthonjaneni local municipality, Kwazulu-Natal, South Africa. South Afr. J. Agric. Ext. 52, 159–177. https://doi.org/10.17159/2413-3221/2024/v52n2a16282.

Oke, E.A., Potgieter, H., Mondlane, F., Skosana, N.P., Teimouri, S., Nyembwe, J.K., 2024. Concurrent leaching of copper and cobalt from a copper – cobalt ore using sulfuric and organic acids. Miner. Eng. 216, 108853. https://doi.org/10.1016/j.mineng.2024.108853.

Peng, Z., Wang, L., Gu, F., Tang, H., Rao, M., Zhang, Y., 2020. Recovery of chromium from ferronickel slag: a comparison of microwave roasting and conventional roasting strategies. Powder Technol. 372, 578–584. https://doi.org/10.1016/j.powtec.2020.05.103.

Peters, M.S., Timmerhaus, K.D., 1991. Plant Design and Economics for Chemical Engineers. Fourth. ed. McGraw-Hill, Inc.

Pinto, J.A., Barros, R.M., dos Santos, I.F.S., Filho, G.L.T., de Oliveira Botan, M.C., Bôas, T. F.V., de Cássia Crispim, A.M., 2023. Study of the anaerobic co-digestion of bovine and swine manure: Technical and economic feasibility analysis. Clean. Waste Syst. 5, 100097. https://doi.org/10.1016/j.clwas.2023.100097.

Prasetyo, A.B., Khaerul, A., Mayangsari, W., Febriana, E., Maksum, A., 2021. Magnesium extraction of ferronickel slag processed by alkali fusion and hydrochloric acid leaching. J. Min. Met. Sect. B Met. 57, 225–233.

Raza, N., Raza, W., Asif, M., 2016. Reaction kinetics of magnesite ore in dilute ethanoic acid 1. Russ. J. NonFerr. Met. 57, 308–315. https://doi.org/10.3103/S1067821216040106.

Rey-Martínez, N., Torres-Sallan, G., Morales, N., Serra, E., Bisschops, I., van Eekert, M.H. A., Borràs, E., Sanchis, S., 2024. Combination of technologies for nutrient recovery from wastewater: a review. Clean. Waste Syst. 7. https://doi.org/10.1016/j.clwas.2024.100139.

Rodrigues, D.M., do Amaral Fragoso, R., Carvalho, A.P., Hein, T., de Brito, A.G., 2022. Are alternative magnesium sources the key for a viable downstream transfer of struvite precipitation? Assessment of process feasibility and precipitate characteristics. J. Water Process Eng. 45. https://doi.org/10.1016/j.jwpe.2021.102508.

Ryu, H.D., Lim, D.Y., Kim, S.J., Baek, U., Il, Chung, E.G., Kim, K., Lee, J.K., 2020. Struvite precipitation for sustainable recovery of nitrogen and phosphorus from anaerobic digestion effluents of swine manure. Sustainability 12, 1–15. https://doi.org/10.3390/su12208574.

Saerens, B., Geerts, S., Weemaes, M., 2021. Phosphorus recovery as struvite from digested sludge – experience from the full scale. J. Environ. Manag. 280, 111743. https://doi.org/10.1016/j.jenvman.2020.111743.

Sathish, K., Saraswat, S., 2025. Screening and characterization of thermally modified biowaste-derived hydrochars for slow-release fertilizer for alkaline soil reclamation. Clean. Waste Syst. 11, 100257. https://doi.org/10.1016/j.clwas.2025.100257.

Seider, W.D., Lewin, D.R., Seader, J.D., Widagdo, S., Gani, R., Ng, K.M., 2015. Product and Process Design Principles, 4th ed. Wiley.

Sena, M., Hicks, A., 2018. Life cycle assessment review of struvite precipitation in wastewater treatment. Resour. Conserv. Recycl. 139, 194–204. https://doi.org/10.1016/j.resconrec.2018.08.009.

Sharma, Pooja, Sharma, Parul, Thakur, N., 2024. Sustainable farming practices and soil health: a pathway to achieving SDGs and future prospects. Discov. Sustain. 5. https://doi.org/10.1007/s43621-024-00447-4.

Shim, S., Reza, A., Kim, S., Won, S., Ra, C., 2021. Nutrient recovery from swine wastewater at full-scale: an integrated technical, economic and environmental feasibility assessment. Chemosphere 277, 130309. https://doi.org/10.1016/j.chemosphere.2021.130309.

Tahat, M.M., Alananbeh, K.M., Othman, Y.A., Leskovar, D.I., 2020. Soil health and sustainable agriculture. Sustainability 12, 1–26. https://doi.org/10.3390/SU12124859.

Wilk, J., Andersson, L., Warburton, M., 2013. Adaptation to climate change and other stressors among commercial and small-scale South African farmers. Reg. Environ. Chang. 13, 273–286. https://doi.org/10.1007/s10113-012-0323-4.

Xu, S., Luo, L., He, H., Liu, H., Cui, L., 2015. Nitrogen and phosphate recovery from source-separated urine by dosing with magnesite and zeolite. Pol. J. Environ. Stud. 24, 2269–2275. https://doi.org/10.15244/pjoes/43611.

Yan, Y., Kallikazarou, N.I., Tzenos, C., Kotsopoulos, T.A., Koutsokeras, L., Kokkinidou, D. A., Michael, C., Constantinides, G., Anayiotos, A.S., Botsaris, G., Nisiforou, O., Antoniou, M.G., Fotidis, I.A., 2023. Pilot-scale biogas and in-situ struvite production from pig slurry: a novel integrated approach. J. Clean. Prod. 431, 139656. https://doi.org/10.1016/j.jclepro.2023.139656.

Zenda, M., 2024. A systematic literature review on the impact of climate change on the livelihoods of smallholder farmers in South Africa. Heliyon 10, e38162. https://doi.org/10.1016/j.heliyon.2024.e38162.

Zhang, T., Fang, C., Li, P., Jiang, R., 2014. Application of struvite process for nutrient recovery from anaerobic digesters of livestock wastewater. Environ. Prot. Eng. 40, 29–42. https://doi.org/10.5277/epel40303.

Zhang, H., Liu, J., Ou, C., Faheem, Shen, J., Yu, H., Jiao, Z., Han, W., Sun, X., Li, J., Wang, L., 2017. Reuse of Fenton sludge as an iron source for NiFe2O4 synthesis and its application in the Fenton-based process. J. Environ. Sci. (China) 53, 1–8. https://doi.org/10.1016/j.jes.2016.05.010.