

https://dspace.org/

# Rifampicinresistant TB Discordance between XpertW MTBRIF and MTBDRplus results

**Marianne Black; P Da Silva; Lesley Scott**

https://hdl.handle.net/10539/35350
WOS

Downloaded from a DSpace repository. https://dspace.org/

INT J TUBERC LUNG DIS 25(10):832–838
© 2021 The Union
http://dx.doi.org/10.5588/ijtld.21.0154

# Rifampicin-resistant TB: discordance between Xpert® MTB/RIF and MTBDR*plus* results

**M. Black,[1,2] P. Da Silva,[3] L. Scott[4]**

[1]Department of Clinical Microbiology and Infectious Diseases, University of the Witwatersrand, Johannesburg, [2]National Health Laboratory Service (NHLS), Johannesburg, [3]National Priority Programmes, NHLS, Johannesburg, [4]Department of Molecular Medicine and Haematology, University of the Witwatersrand, Johannesburg, South Africa

**SUMMARY**

**BACKGROUND: South Africa's diagnostic algorithm for TB diagnosis from 2011 to 2017 employed the Xpert® MTB/RIF assay as the initial screening test for TB diagnosis and rifampicin (RIF) susceptibility, followed by submission of a specimen for GenoType® MTBDR*plus*. This study aimed to determine the concordance between the two assays in terms of RIF susceptibility and explore reasons for discordance.**

**METHODS: This was a retrospective laboratory-based study that included all MTBDR*plus* results of tests performed at the Braamfontein Mycobacteriology Referral Laboratory between 1 September 2014 and 31 August 2015. The patient's Xpert RIF result was linked with the MTBDR*plus* result.**

**RESULTS: The overall concordance between RIF susceptibility results was 96.4%. There were 68 discordant RIF results. The most common reasons for discordance identified were possible false Xpert RIF-resistant results (22%), mixed infection/hetero-resistance (16%), transcription errors (7%) and erroneous manual interpretation of the MTBDR*plus* strip (7%). Xpert RIF resistance detected using delayed hybridisation was associated with discordance.**

**CONCLUSIONS: The overall concordance between the MTBDR*plus* and Xpert RIF results were very good. Management of discordance should include repeat specimens for Xpert and MTBDR*plus* and *rpo*B sequencing. All variables should then be considered before treatment regimens are altered.**

**KEY WORDS**: line-probe assay; drug susceptibility testing; *rpo*B

TB is the leading cause of death worldwide caused by an infectious agent, *Mycobacterium tuberculosis*. It is estimated that 10 million people progressed to TB disease in 2019, with 1.4 million of these dying.[1] An ongoing challenge in the control of TB is drug-resistant TB, including rifampicin-resistant ($RIF^R$) and multidrug-resistant TB (MDR-TB). MDR-TB is defined as resistance to at least rifampicin (RIF) and isoniazid (INH), two critical drugs used in its treatment. In 2011, the WHO recommended the use of rapid molecular diagnostics (instead of phenotypic methods) as the initial diagnostic test (replacing smear microscopy) to improve the time to diagnosis and obtaining drug susceptibility testing results. The Xpert® MTB/RIF (Cepheid, Sunnyvale, CA, USA) assay detects susceptibility to RIF only. The assay was endorsed by the WHO in 2010, and has been used in South Africa's testing algorithm as the initial diagnostic test since 2011.[2]

GenoType MTBDR*plus* (Hain Lifescience, Nehren, Germany), a line-probe assay (LPA), detects both RIF and INH susceptibility, and is therefore able to diagnose MDR-TB. The MTBDR*plus* v.1 LPA has been used in South Africa since 2008 for the rapid diagnosis of MDR-TB.[3] The MTBDR*plus* v.2 was introduced in 2013 to improve performance on smear-negative, culture-positive specimens. Patients are commenced on an MDR-TB treatment regimen if RIF resistance is detected on Xpert. In Gauteng Province, a second specimen is subsequently obtained from the patient, and submitted for testing using the LPA to confirm the Xpert result and identify any INH resistance due to genetic changes in the *inh*A and *kat*G genes. The LPA is performed directly from the clinical specimen if smear-positive, and from culture, if smear-negative, according to the manufacturer's recommendations.

The gene associated with RIF resistance is the mycobacterial RNA polymerase β subunit (*rpo*B) gene. Around 96% of mutations conferring RIF resistance are confined within an 81 base pair (bp) region of the *rpo*B gene, termed the RIF resistance

Correspondence to: Marianne Black, Department of Clinical Microbiology and Infectious Diseases, University of the Witwatersrand, corner de Korte street and Hospital street, Braamfontein, Johannesburg, South Africa. email: marianne.black@nhls.ac.za

*Article submitted 11 March 2021. Final version accepted 28 May 2021.*

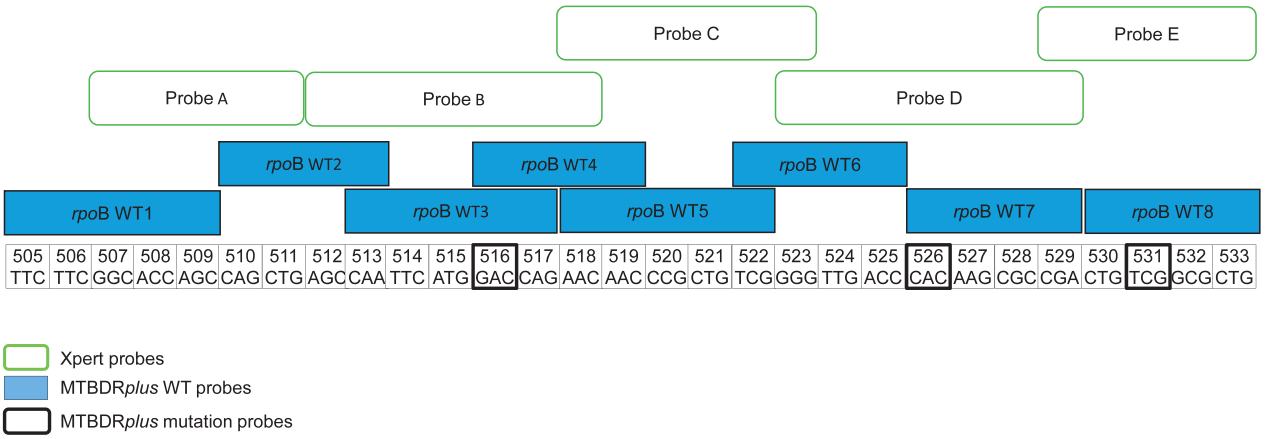


**Figure 1** The rifampicin resistance determining region (RRDR). The RRDR is located in the mycobacterial RNA polymerase β subunit (*rpo*B) gene, codon 507–533. The codon positions along with the nucleotide sequence for *M. tuberculosis* complex is indicated. Both Xpert and MTBDR*plus* binding probes extend across the 81-bp region. Certain probe-binding positions overlap. There is an overlay between Xpert probes and MTBDR*plus* probes. WT = wild-type; bp = base pair.

determining region (RRDR) (codon 507–533 using the *E.coli* numbering system).[4–6] Both the Xpert and LPA assays have binding probes that extend across the RRDR (Figure 1).

Discordant Xpert and LPA RIF susceptibility results pose a patient management dilemma for clinicians, and is not an uncommon finding.[7–11] Discordance is defined as a paired Xpert and LPA with different RIF susceptibility results, i.e., Xpert $RIF^R$ and LPA RIF-susceptible ($RIF^S$) or Xpert $RIF^S$ and LPA $RIF^R$. In the South African TB diagnostic algorithm, a specimen for Xpert is submitted first, followed by a second specimen for LPA if RIF resistance is detected on Xpert. There are currently no guidelines on the management of patients with discordant molecular RIF susceptibility results.

Data on the concordance rate between the Xpert and LPA RIF results obtained for routine patient management from South African patients are currently limited.[9] Only three other international studies have compared the concordance of RIF results between Xpert and LPA.[12–14]

The aim of the present study was to determine concordance in the rifampicin susceptibility results between the two assays over the period 2014–2015 and explore reasons for discordance. The molecular hybridisation codon regions for $RIF^R$ results between the two assays were also compared.

## METHODS

This was a retrospective laboratory-based study that included all LPA results of tests performed at the centralised National Health Laboratory Service (NHLS) Braamfontein Mycobacteriology Referral Laboratory for specimens submitted from four districts in Gauteng: City of Johannesburg, West Rand, Ekurhuleni and Sedibeng. The study analysed data from 1 September 2014 to 31 August 2015. LPA results from specimens in City of Tshwane were not included as these were tested at the Tshwane Academic NHLS laboratory.

The patient's Xpert RIF result (tested at various decentralised NHLS Gauteng laboratories), collected and tested within 4 months of the LPA result, was manually linked using patient identifiers via the laboratory information system (LIS). G4 cartridge were used at the time and MTBDR*plus* v2.0. Only valid reported results were included in the study. The molecular probe involved in LPA and Xpert RIF susceptibility results were recorded for comparison. The method used to detect RIF resistance using Xpert was also recorded (probe drop-out vs. delayed binding), together with the difference in the cycle threshold (ΔCt) between the first probe and last probe binding.

κ statistics were calculated for agreement between LPA and Xpert RIF susceptibility results using Stata SE14 (Stata Corp, College Station, TX, USA). The *P* value statistic was calculated for the Xpert probe analysis for the discordant RIF susceptibility results (using Stata SE14).

Ethics clearance was obtained from the Human Research Ethics Committee, University of Witwatersrand, Johannesburg, South Africa (clearance certificate number M170242).

## RESULTS

A total of 1,901 valid Xpert RIF susceptibility results were successfully linked with the LPA results (Figure 2). The overall agreement between LPA and Xpert RIF susceptibility result was 96.4%. ($\kappa = 0.9245$, *Z*-score = 40.34). A total of 698 (36.7%) patients had both an LPA and Xpert $RIF^R$ result. Of these 698 patients, 688 (98.57%) had probe details entered for both Xpert and LPA for the molecular codon region

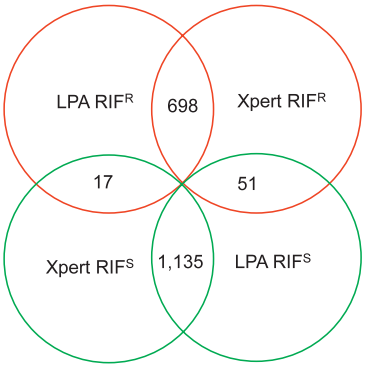


**Figure 2** Rifampicin susceptibility results for paired MTBDR*plus* (LPA) and Xpert. LPA = line-probe assay; RIF$^R$ = rifampicin-resistant; RIF$^S$ = rifampicin-susceptible.

comparison. The agreement between the LPA and the Xpert molecular region was 99.3% (683/688).

There were 68 (3.58%) discordant RIF susceptibility results, of which 17 were Xpert RIF$^S$ but LPA RIF$^R$ (25%), and 51 Xpert RIF$^R$ but LPA RIF$^S$ (75%). The discordance was mostly found in the *rpo*B codon region 529–533 (29/68, 43%). This is represented by the wild-type 8 (WT8) region for the LPA ($n = 10$, 58.8%) and Probe E for the Xpert ($n = 19$, 41.3%). The 68 discordant RIF results are shown in Table 1. The LPA were performed from a total of 50 cultured specimens and the remainder ($n = 18$) were performed directly from clinical specimens.

All TB RIF susceptibility results for patients with discordant RIF results were reviewed by searching the LIS to explore possible reasons for discordance (Table 1). This included the time between specimen submission for Xpert testing and LPA, whether the LPA was performed from the clinical specimen or culture and the RIF susceptibility results for all follow-up specimens sent for Xpert and/or LPA. We also noted if heteroresistance was detected. This helped in determining the possible reasons for discordance. Although the lack of *rpo*B sequencing for the discordant specimens prevents definitive conclusions, the possible reasons for discordance identified (Table 1) were as follows:

1 Possible false Xpert RIF$^R$ result ($n = 15$, 22%). All subsequent specimens sent for Xpert and/or LPA were RIF$^S$;
2 Mixed infection or heteroresistance. There were five LPA samples with heteroresistance detected (presence of all WT probes on LPA, as well as a MUT probe); an additional six patients were identified via the LIS search, with several follow-up specimens for Xpert and LPA that were susceptible and resistant ($n = 11$, 16%);
3 Transcription errors. Xpert RIF$^R$ results were manually entered into the LIS for 5 (7%) of the patients;
4 Possible false LPA RIF$^R$ ($n = 2$), possible false LPA RIF$^S$ ($n = 3$, 7%);
5 New TB infection/emergence of RIF resistance: for some patients the time difference were 3–4 months between specimen collection for Xpert and LPA, and no other obvious reason could be found for discordance ($n = 3$, 4%);
6 Laboratory contamination event ($n = 1$, 1%).

Twenty-eight (41%) patients had no follow-up specimens for Xpert and/or LPA in the LIS. The median time between the specimens collected for discordant Xpert and LPA was 9 days (interquartile range [IQR] 5–32), with 7 patients having a 3–4 months' delay in the submission of the repeat specimen for LPA.

### *Comparison of Xpert probe details for concordant vs. discordant Xpert RIF$^R$ results*

The number of Xpert RIF$^R$ that were discordant with the LPA RIF result detected using delayed binding of the probe was higher than the number of Xpert RIF$^R$ results that were concordant with the LPA RIF result (47.1% vs. 6.6%; $P < 0.001$). Most (58.3%) of the ΔCt values of the discordant Xpert RIF$^R$ results were in the range of 4.1–4.9, compared to concordant Xpert RIF$^R$ results (15.6%). The median ΔCt value of discordant Xpert RIF$^R$ results was also much lower (4.7 vs. 7). The involvement of multiple probes was more frequent in discordant Xpert RIF$^R$ results (8.9% vs. 2.2%; $P = 0.055$; Table 1).

## DISCUSSION

### *Agreement between LPA and Xpert molecular rpoB codon regions*

The 99.3% agreement between the molecular codon region for LPA and Xpert RIF$^R$ results confirm the efficacy of the South African algorithm, which requires Xpert RIF$^R$ patients to submit a second specimen for LPA. This is also in accordance with the WHO guidelines to confirm Xpert RIF$^R$ results in areas with a <15% prevalence of RIF$^R$ TB with either another Xpert, drug susceptibility test or LPA.[15]

### *Agreement between LPA and Xpert RIF susceptibility results*

The overall concordance between all RIF susceptibility results for the two molecular assays was 96.4%. This is similar to other studies from Asia and Southern Africa.[11–14] There were 68 discordant RIF susceptibility results from the 1,901 LPA and Xpert results that could be matched (3.6%) (Figure 2). The 68 discordant RIF susceptibility results consisted of 51 samples that were Xpert RIF$^R$ but LPA RIF$^S$ (75%) and 17 that were Xpert RIF$^S$ but LPA RIF$^R$ (25%) (Table 1, Figure 1). This likely reflects the Xpert RIF$^R$ diagnostic algorithm used in South Africa, as only

**Table 1** Characteristics of discordant RIF susceptibility results*

| Patient no | LPA RIF result (probe) | Xpert RIF result (probe) | Time between Xpert and LPA result | Xpert probe drop out/delay (ΔCt>4) | ΔCt value | Review of all RIF susceptibility results | | Possible explanation for RIF discordance |
|---|---|---|---|---|---|---|---|---|
| | | | | | | LPA | Xpert | |
| 40 | S | R (A) | 6d | Delay | 4.4 | | S | Possible false Xpert-resistant |
| 10 | S | R (B) | 2d | Delay | 4.1 | S | S | Possible false Xpert-resistant |
| 22 | S | R (C) | 10d | Drop out | | | S | Possible false Xpert-resistant |
| 37 | S | R (C) | 12d | Delay | 4.8 | | S | Possible false Xpert-resistant |
| 15 | S | R (D) | 4d | Delay | 10.9 | Repeated twice: S | | Possible false Xpert-resistant |
| 16 | S | R (D) | 5d | Delay | 6.1 | S | | Possible false Xpert-resistant |
| 30 | S | R (D) | 8d | Delay | 4.7 | | S | Possible false Xpert-resistant |
| 49 | S | R (D) | 8d | Delay | 4.7 | Repeated thrice: S | S | Possible false Xpert-resistant |
| 42 | S | R (E) | 28d | Delay | 5.6 | | S | Possible false Xpert-resistant |
| 18 | S | R (D, E) | 7d | Drop out | | Repeated twice: S | | Possible false Xpert-resistant |
| 28 | S | R (D, E) | 4d | Drop out | | | S | Possible false Xpert-resistant |
| 36 | S | R (D, E) | 15d | Drop out | | S | | Possible false Xpert-resistant |
| 43 | S | R (D, E) | 4m | Drop out | | S | S | Possible false Xpert-resistant/ new TB infection |
| 62 | S | R (E) | 21d | Delay | 7.1 | S | | Possible false Xpert-resistant |
| 47 | S | R (B) | 2m | Drop out | | S | | Possible false Xpert-resistant |
| 3 | R (ΔWT7, MUT2A) | S | 15d | | | R (heteroresistance) | | Heteroresistance |
| 6 | R (MUT2A) | S | 4d | | | | | Heteroresistance |
| 41 | R (MUT2B) | S | 1d | | | | | Heteroresistance |
| 54 | R (MUT3) | S | 3m | | | | | Heteroresistance |
| 56 | R (ΔWT8, MUT3) | S | 25d | | | S | R | Heteroresistance |
| 65 | R (MUT2A) | S | 8d | | | | | Heteroresistance |
| 66 | R (MUT3) | S | 3m | | | | | Heteroresistance |
| 46 | S | R (B) | 2d | Delay | 5.4 | R | S | Heteroresistance |
| 25 | S | R (D) | 4d | Delay | 5 | | S (performed 5m before) | Mixed infection |
| 68 | S | R (D) | 4d | Drop out | | R | S | Heteroresistance |
| 2 | R (ΔWT8, MUT3) | S | 39d | | | | R | Mixed infection |
| 1 | R (ΔWT8) | S | 4m | | | R | | Possible new TB infection/ emergence of resistance |
| 32 | R (ΔWT8, MUT3) | S | 4m | | | | R | Possible new TB infection/ emergence of resistance |
| 17 | R (ΔWT3,4) | S | 3m | | | R | R | Possible new TB infection/ emergence of resistance |
| 8 | R (WT8 equivocal) | S | 4m | | | S | | Possible false LPA-resistant (poor quality strip due to insufficient DNA – smear was scanty for AFB) OR new TB infection/ emergence of resistance |
| 38 | R (ΔWT3,4) | S | 14d | | | Repeated thrice: S | | Possible false LPA-resistant |
| 39 | S | R (A) | 2d | Drop out | | Repeated twice: R (ΔWT2) | | Possible false-susceptible LPA: Possible ΔWT2 missed on LPA |
| 9 | S | R (E) | 6d | Delay | 8.5 | R | | Possible false-susceptible LPA |
| 64 | S | R (E) | 11d | Delay | 4.2 | Repeated thrice: R | R | Possible false-susceptible LPA |
| 45 | S | R (E) | 2m | Drop out | | R | R | Laboratory contamination event: report was amended to "Inconclusive" |
| 19 | S | R, no values | 9d | | | S | | Possible transcription error when entering Xpert result into LIS |
| 20 | S | R, no values | 7d | | | | | Possible transcription error when entering Xpert result into LIS |
| 26 | S | R, no values | 1d | | | | S | Possible transcription error when entering Xpert result into LIS |
| 27 | S | R, no values | 3d | | | | | Possible transcription error when entering Xpert result into LIS |
| 31 | S | R, no values | 2d | | | | S | Possible transcription error when entering Xpert result into LIS |
| 53 | R (ΔWT3,4) | S | 25d | | | | | No other results |
| 61 | R (ΔW8, MUT3) | S | 7d | | | | | No other results |
| 7 | R (ΔWT8, MUT3) | S | 3m | | | | | No other results |
| 12 | R (ΔWT8) | S | 2.5m | | | | | No other results |
| 5 | S | R (B) | 1m | Delay | 4.5 | | | No other results |
| 35 | S | R (B) | 4m | Delay | 4.3 | | | No other results |
| 52 | S | R (B) | 11d | Delay | 11.5 | | | No other results |
| 60 | S | R (B) | 7d | Drop out | | | | No other results |
| 29 | S | R (A) | 2m | Drop out | | | | No other results |
| 50 | S | R (C) | 7d | Drop out | | | | No other results |
| 51 | S | R (D) | 50d | Delay | 7.1 | | | No other results |
| 55 | S | R (D) | 3d | Drop out | | | | No other results |

**Table 1** (*continued*)

| Patient no | LPA RIF result (probe) | Xpert RIF result (probe) | Time between Xpert and LPA result | Xpert probe drop out/delay (ΔCt>4) | ΔCt value | Review of all RIF susceptibility results | | Possible explanation for RIF discordance |
|---|---|---|---|---|---|---|---|---|
| | | | | | | LPA | Xpert | |
| 57 | S | R (D) | 22d | Drop out | | | | No other results |
| 63 | S | R (D) | 4d | Drop out | | | | No other results |
| 4 | S | R (E) | 8d | Drop out | | | | No other results |
| 11 | S | R (E) | 25d | Delay | 5.6 | | | No other results |
| 13 | S | R (E) | 7d | Delay | 4.1 | | | No other results |
| 14 | S | R (E) | 3d | Delay | 4.4 | | | No other results |
| 21 | S | R (E) | 6d | Drop out | | | | No other results |
| 23 | S | R (E) | 37d | Drop out | | | | No other results |
| 24 | S | R (E) | 5d | Delay | 4.1 | | | No other results |
| 33 | S | R (E) | 7d | Drop out | | | | No other results |
| 34 | S | R (E) | 16d | Drop out | | | | No other results |
| 44 | S | R (E) | 2.5m | Drop out | | | | No other results |
| 48 | S | R (E) | 7d | Drop out | | | | No other results |
| 58 | S | R (E) | 7d | Delay | 4.7 | | | No other results |
| 59 | S | R (E) | 2d | Delay | 4.1 | | | No other results |
| 67 | S | R (E) | 26d | Delay | 4.3 | | | No other results |

* LPA were performed either directly from the clinical specimen or from the culture.
RIF = rifampicin; LPA = line-probe assay; Ct = cycle threshold; S = susceptible; R = resistant; d = days; m = months: AFB = acid-fast bacilli; LIS = laboratory information system; ΔCt = difference between maximum and minimum probe Ct value.

Xpert RIF$^R$ specimens and not Xpert RIF$^S$ specimens, were sent for a confirmatory follow-up LPA. A Cape Town, South Africa, study found similar results, with the majority of discordant samples being due to Xpert RIF$^R$ and LPA RIF$^S$ results.[10]

Most of the discordant results came from LPA performed using culture samples ($n = 50/68$). The strain composition of the initial clinical specimen may be altered after culture for various reasons (this is not uncommon),[16] possibly because one of the strains may be underrepresented in the clinical specimen or the growth rate between the different strains may vary, so that one may outgrow the other and go undetected. Strain susceptibility to decontamination procedures may differ or differences in the tendency to clump may eventually alter culture composition. Culture samples may therefore not reflect the clonal complexity that was present in the original clinical specimen.[16–18]

### *Exploring possible reasons for discordant Xpert and LPA RIF results*

The most common reason for discordance identified was possible false Xpert RIF$^R$ results ($n = 15$, 22%). All results from repeat specimens sent for LPA and/or Xpert for these patients were found to be susceptible. In addition, 8/15 were due to delayed binding of the Xpert probe, a characteristic that was found to be statistically significant (Table 2). Other authors have also analysed the characteristics of Xpert probe binding to elucidate possible identifiable factors for discordant results. Xpert RIF$^R$ results by delayed hybridisation and a ΔCt value of 4–4.9 was associated with discordant Xpert results.[8,10]

Heteroresistance or mixed infection was detected in five of the discordant LPA RIF$^R$ results, with an additional six identified via the LIS search (Table 1). Heteroresistance or mixed infection may occur in >50% of patients in hyper-endemic settings, and is highly underestimated.[19] It is currently not standard practice to include in the laboratory report the presence of RIF$^R$ heteroresistance as detected on LPA. This should be reported, as the treatment regimen of the patient in such cases may be adapted to include RIF.[19] Transcription errors was the cause of discordant results in five patients. This may be prevented by ensuring good laboratory practice.

Poor quality of the LPA strip makes manual interpretation difficult, particularly when performed directly on the clinical specimen. The sensitivity of the LPA increases with bacillary burden.[20] This may have

**Table 2** Comparison of discordant Xpert RIF$^R$ vs. concordant Xpert RIF$^R$ results*

| Xpert | Discordant Xpert RIF$^R$ results ($n = 45$) *n* (%) | Concordant Xpert RIF$^R$ results ($n = 683$) *n* (%) | *P* value† |
|---|---|---|---|
| RIF resistance by delayed hybridization (ΔCt > 4) | 24 (47.1) | 45 (6.6) | <0.001 |
| ΔCt value 4.1–4.9 | 14 (58.3) | 7 (15.6) | 0.910 |
| Median ΔCt value | 4.7 | 7 | 0.333 |
| Multiple probes involved | 4 (8.9) (Probes D & E) | 15 (2.2) | 0.055 |

* Only 45 from the 51 discordant Xpert RIF$^R$ and 683 from the 698 concordant Xpert RIF$^R$ had probe details entered on LIS.
† Differences between concordant and discordant Xpert RIF were calculated using the $\chi^2$ test for categorical variables and the Wilcoxon rank-sum test for continuous variables. *P* values are two-sided, $P < 0.05$ was considered statistically significant.
RIF$^R$ = RIF-resistant; RIF = rifampicin; ΔCt = difference between maximum and minimum probe Ct value; Ct = cycle threshold; LIS = laboratory information system.

been the cause of discordant results in five patients (7%). The time lapse between specimen collection for Xpert testing and the LPA may have been up to 3–4 months for some patients ($n = 8$). New TB infection or emergence of RIF resistance cannot be excluded in such cases.

### *Management of discordant RIF results*

There are currently no guidelines that provide a standardised approach for troubleshooting in case of discordant Xpert and LPA RIF results. Clinicians are faced with a treatment dilemma in such situations. Patients with discordant results are likely to be initiated on sub-optimal treatment regimens. Management usually include assessing the patient's clinical response to the current treatment regimen and collecting repeat specimens for Xpert and LPA. All variables are then considered before treatment regimens are altered.

The clinical microbiology laboratory may employ several methods as part of both the detection and troubleshooting of discordant Xpert and LPA results. These include DNA sequencing of the *rpo*B gene, which also detects mutations outside the RRDR, and the identification of mixed strains.[21] Technical issues, such as poor quality of the LPA strip, may lead to errors in interpretation. Future technologies should employ automated interpretation, instead of manual which introduces user bias, to address these shortcomings. False Xpert $RIF^R$ results secondary to delayed binding of the probe, $\Delta Ct$ value $< 5$ and the failure of multiple probes should also be considered as reasons for discordant results. The Xpert G4 cartridge was recently (2017) replaced by the Xpert MTB/RIF Ultra cartridge in South Africa. The next step would be to compare Xpert Ultra results with MTBDR*plus* v2 results.

### *Implications for the South African TB diagnostic algorithm and patient care*

The South African TB diagnostic algorithm (submission of Xpert $RIF^R$ results for a second confirmatory LPA) is justified. This is illustrated by the number of discordant RIF susceptibility results ($n = 68/1901$, 3.58%) observed in this study. Knowledge of INH susceptibility is also essential for prescribing second-line regimens. The limitation is that Xpert $RIF^S$ results are not followed by a confirmatory LPA, so these discordant results (Xpert $RIF^S$, LPA $RIF^R$) are likely to be missed by the current algorithm (there were only 17 Xpert $RIF^S$, LPA $RIF^R$ results observed in this study). This may need re-evaluation as the $RIF^S$, $INH^R$ cases may go undetected in the current South African TB diagnostic algorithm.

### *Study limitations*

Study limitations included the lack of a gold standard such as sequencing or phenotypic drug susceptibility testing with which to compare discordant RIF susceptibility results. Due to non-use of a unique identifier, fewer than half of the LPA RIF results could be linked with a valid Xpert RIF result. A unique identifier is necessary to improve on this shortcoming. The Xpert and LPA were performed on different specimens, although this is the testing algorithm followed in South Africa (except for Western Cape Province). Findings are relevant to Gauteng Province, and although both assays are used extensively across South Africa, these results may not be representative across all geographic areas in South Africa.

## CONCLUSION

The overall concordance between all RIF susceptibility results and for the molecular codon region for $RIF^R$ results was very good (respectively 96.4% and 99.3%). There were 68 (3.6%) discordant RIF susceptibility results out of the 1,901 matched LPA and Xpert results. Reasons for discordance identified were possible false Xpert $RIF^R$ results (22%), mixed infection/heteroresistance (16%), Xpert transcription errors (7%) and erroneous manual interpretation of the LPA strip (7%). Xpert RIF resistance detected using delayed hybridisation was associated with discordance. Management of discordant results include repeat specimen testing using Xpert and LPA, and *rpo*B sequencing.

### *References*


1 World Health Organization. Global tuberculosis report, 2020. Geneva, Switzerland: WHO, 2020. https://www.who.int/publications-detail-redirect/9789240013131
2 World Health Organization. Rapid implementation of the Xpert MTB/RIF diagnostic test. Geneva, Switzerland: WHO, 2011. http://www.who.int/tb/publications/tb-amplificationtechnology-implementation/en/
3 World Health Organization. WHO policy statement: molecular line-probe assays for rapid screening of patients at risk of multidrug-resistant tuberculosis. Geneva, Switzerland: WHO, 2008. http: //www.who.int/tb/laboratory/line_probe_assays/en/
4 Siu GKH, et al. Mutations outside the rifampicin resistance-determining region associated with rifampicin resistance in *Mycobacterium tuberculosi*s. J Antimicrob Chemother 2011; 66(4): 730–733.
5 Rigouts L, et al. Rifampin resistance missed in automated liquid culture system for *Mycobacterium tuberculosis* isolates with specific *rpo*B mutations. J Clin Microbiol 2013; 51(8): 2641–2645.
6 Lin SY, Desmond EP. Molecular diagnosis of tuberculosis and drug resistance. Clin Lab Med 2014; 34(2): 297–314.
7 Hughes J, Osman M. Diagnosis and management of drug-resistant tuberculosis in South African adults. S Afr Med J 2014; 104(12): 894–900.
8 Berhanu R, et al. Xpert MTB/RIF molecular probe binding characteristics associated with discordant confirmatory rifampicin resistance testing. Int J Tuberc Lung Dis 2015; 19: S107–S108.
9 Berhanu RH, et al. Discordant rifampicin susceptibility results are associated with Xpert® MTB/RIF probe B and probe binding delay. Int J Tuberc Lung Dis 2019; 23(3): 358–362.

10 Beylis N, et al. Characterization of *Mycobacterium tuberculosis* complex isolates with discordant rifampicin susceptibility test results. Int J Tuberc Lung Dis 2015; 19: S104.
11 Strydom K, et al. Comparison of three commercial molecular assays for detection of rifampin and isoniazid resistance among *Mycobacterium tuberculosis* isolates in a high-HIV-prevalence setting. J Clin Microbiol 2015; 53(9): 3032–3034.
12 Rufai SB, et al. Comparison of Xpert MTB/RIF with line probe assay for detection of rifampin-monoresistant *Mycobacterium tuberculosis*. J Clin Microbiol 2014; 52(6): 1846–1852.
13 Rahman A, et al. Comparison of Xpert MTB/RIF assay and GenoType MTBDR*plus* DNA probes for detection of mutations associated with rifampicin resistance in *Mycobacterium tuberculosis*. PLoS ONE 2016; 11(4): e0152694.
14 Racheal S, et al. Diagnosis of multi-drug resistant tuberculosis mutations using Hain line probe assay and GeneXpert: a study done in Zimbabwe. Br J Med Med Res 2015; 5(8): 1044–1052.
15 World Health Organization. Xpert mtb/rif implementation manual: technical and operational "how-to." Geneva, Switzerland: WHO, 2014.
16 Scott LE, et al. Comparison of Xpert MTB/RIF with other nucleic acid technologies for diagnosing pulmonary tuberculosis in a high HIV prevalence setting: a prospective study. PLoS Med 2011; 8(7): e1001061.
17 van Rie A, et al. Reinfection and mixed infection cause changing *Mycobacterium tuberculosis* drug-resistance patterns. Am J Respir Crit Care Med 2005; 172(5): 636–642.
18 Martín A, et al. The clonal composition of *Mycobacterium tuberculosis* in clinical specimens could be modified by culture. Tuberculosis 2010; 90(3): 201–207.
19 Zetola NM, et al. Mixed *Mycobacterium tuberculosis* complex infections and false-negative results for rifampin resistance by GeneXpert MTB/RIF are associated with poor clinical outcomes. J Clin Microbiol 2014; 52(7): 2422–2429.
20 Dorman SE, et al. Genotype MTBDR*plus* for direct detection of *Mycobacterium tuberculosis* and drug resistance in strains from gold miners in South Africa. J Clin Microbiol 2012; 50(4): 1189–1194.
21 McAlister AJ, Driscoll J, Metchock B. DNA sequencing for confirmation of rifampin resistance detected by Cepheid Xpert MTB/RIF assay. J Clin Microbiol 2015; 53(5): 1752–1753.

**RÉSUMÉ**

**CONTEXTE : En Afrique du Sud, l'algorithme diagnostique (de 2011 à 2017) de la TB se fonde sur le test Xpert® MTB/RIF en tant que test de dépistage initial pour le diagnostic de la TB et la sensibilité à la rifampicine (RIF), suivi de l'analyse d'un échantillon par test GenoType® MTBDR*plus*. Cette étude avait pour objectif de déterminer la concordance du résultat de sensibilité à la RIF entre les deux tests, et d'explorer les raisons des discordances.**

**MÉTHODES : Cette étude de laboratoire rétrospective a inclus tous les résultats des tests MTBDR*plus* réalisés au laboratoire de référence de mycobactériologie de Braamfontein entre le 1er septembre 2014 et le 31 août 2015. Les résultats des patients aux tests Xpert ont été reliés aux résultats des tests MTBDR*plus*.**

**RÉSULTATS : La concordance globale entre les résultats de sensibilité à la RIF était de 96,4%. Soixante-huit résultats RIF discordants ont été observés. Les principales raisons de discordance identifiées étaient de possibles faux résultats de résistance au test Xpert (22%), une infection mixte/hétérorésistance (16%), des erreurs de transcription (7%) et une interprétation manuelle erronée de la bandelette MTBDR*plus* (7%). La résistance au test Xpert détectée par hybridation retardée a été associée à des résultats discordants.**

**CONCLUSIONS : La concordance globale entre les résultats des tests MTBDR*plus* et Xpert était très bonne. En cas de résultats discordants, de nouveaux échantillons doivent être soumis aux tests Xpert et MTBDR*plus*, et un séquençage du gène *rpo*B doit être réalisé. Toutes les variables sont ainsi prises en compte avant de modifier les schémas thérapeutiques.**