

https://dspace.org/

The amygdaloid modulation of adrenocortical function and habituation in rats

Saling, Michael Martin

2015-09-09
http://hdl.handle.net/10539/18601

Downloaded from a DSpace repository. https://dspace.org/

THE AMYGDALOID MODULATION OF ADRENOCORTICAL FUNCTION AND HABITUATION IN RATS

Michael Martin Saling

A Dissertation Submitted to the Faculty of Arts
University of the Witwatersrand, Johannesburg
for the Degree of Master of Arts

Johannesburg, 1974

I hereby declare that this dissertation is my own work and that I have not submitted it for a Master's Degree to any other University

M.M. Saling

M.M. SALING

ACKNOWLEDGMENT

I wish to thank my supervisor, Dr T.L. Holdstock, for his invaluable guidance in the preparation of this dissertation.

CONTENTS

		PAGE
1	ABSTRACT	1
2	EXPERIMENT 1	
	2.1 Introduction	2
	2.2 Method	5
	2.3 Results	8
	2.4 Discussion	12
3	EXPERIMENT 2	
	3.1 Introduction	14
	3.2 Method	15
	3.3 Results	16
	3.4 Discussion	20
4	GENERAL DISCUSSION	21
5	REFERENCES	22
6	APPENDIX A	27
7	APPENDIX B	32
8	APPENDIX C	38

ABSTRACT

The relationship between amygdaloid damage and the intraperitoneal injection of betamethasone was studied with respect to the exploratory behaviour of male hooded rats. Amygdalectomy produced attenuated long-term habituation of stimulus-specific and general exploratory behaviour. This habituation deficit was uninfluenced by betamethasone. Betamethasone also failed to influence long-term habituation in the intact animals. Although amygdalectomy did not alter short-term habituation, betamethasone accelerated the short-term habituation of general exploratory behaviour in both amygdalectomized and intact animals. On replication of the experiment betamethasone administration failed to influence exploration. It was tentatively concluded that amygdalectomy and betamethasone influence the habituation of exploratory activity under mutually exclusive circumstances. However, the failure to replicate the amygdalectomy- and betamethasone-induced changes in habituation could not be interpreted within the context of the present experiment.

The amygdala, a mediobasal nuclear complex of the temporal lobe, has been implicated in the regulation of a wide variety of behavioural functions such as general arousal, dietary intake, sexual motivation, emotionality, approach and avoidance learning, and the mediation of reward and punishment effects (Goddard, 1964). Recent research has demonstrated amygdaloid involvement in memory consolidation (Gehres, Randall, Riccio and Vardaris, 1973; Kesner and Conner, 1974; Kesner and Doty, 1967; 1968; McIntyre, 1970), social interaction (Jonason, Enloe, Contrucci and Meyer, 1973; Kling, Lancaster and Benitone, 1970; Thompson, Schwartzbaum and Harlow, 1969), and sensorimotor integration (Turner, 1973). In addition, the modulatory influence of the amygdala on dietary intake (Atunes-Rodrigues, Negro-Vilar and Covian, 1970; Rolls and Rolls, 1973a; 1973b; White and Fisher, 1969), intracrancial self-stimulation (Jackson and Gardner, 1974; Kant, 1969) and pain perception (Lico, Hoffman and Covian, 1974) has been demonstrated. A further avenue of investigation has implicated the amygdala in the processing of environmental novelty (Anderson, 1970; Bagshaw and Benzies, 1968; Bagshaw and Coppock, 1968; Bagshaw, Kimble and Pribram, 1965; Bagshaw, Mackworth and Pribram, 1972; Corman, Meyer and Meyer, 1967; Douglas, 1966; Douglas and Pribram, 1966; Douglas and Pribram, 1969; Holdstock, 1969; Schaefer, Kreinick and Schwartzbaum, 1974; Schwartzbaum, Bowman and Holdstock, 1964; Schwartzbaum and Gay, 1966; Schwartzbaum, Wilson and Morrisette, 1961).

The nature of amygdaloid involvement in the processing of environmental novelty is, at present, a controversial issue and appears to be dependent upon the response measure employed. In terms of viewing time (Schwartzbaum et al., 1964), visual fixation (Bagshaw et al., 1972) and autonomic reactivity (Bagshaw and Benzies, 1968; Bagshaw and Coppock, 1969; Bagshaw et al., 1965; Holdstock, 1969), the amygdalectomized animal is hyporesponsive to novelty. However, amygdaloid damage results in hyper-responsiveness to novel distracting stimuli presented during the performance of an ongoing task (Douglas and Pribram, 1966; Douglas and Pribram, 1969; Schaefer et al., 1974). Similarly, with respect to the locomotor exploration of novel environments, the amygdalectomized animal has been characterized as hyper-responsive (Anderson, 1970; Corman et al., 1967; Schaefer et al., 1974; Schwartzbaum and Gay, 1966). The increased exploratory activity undergoes normal short-term (intrasession) habituation (Schaefer et al., 1974; Schwartzbaum and Gay, 1966), but exhibits

attenuated long-term (intersession) habituation (Schaefer, et al., 1974; Schwartzbaum et al., 1961).

There are a number of lines of evidence which suggest that the hyperresponsiveness and attenuated long-term habituation exhibited by amygdalectomized animals during the locomotor exploration of novel environments may be partially attributable to alterations in the activity of the pituitary-adrenocortical axis. Firstly, an amygdaloid modulation of the pituitary-adrenocortical axis has been convincingly demonstrated by means of lesion and stimulation techniques (Bovard and Gloor, 1961; Eleftheriou, Zolovick and Pearse, 1966; Knigge, 1961; Knigge and Hays, 1963; McHugh and Smith, 1967a; 1967b; Mandell, Chapman, Rand and Walter, 1963; Mason, 1959; Matheson, Branch and Taylor, 1971; Redgate, 1970; Rubin, Mandell and Crandall, 1966; Setekleiv, Skaag and Kaada, 1961; Slusher and Hyde, 1961). Large, subtotal lesions of the amygdala, primarily involving the basolateral division, result in the suppression of stress-induced secretion of adrenocorticotrophic hormone (ACTH) (Knigge, 1961; Knigge and Hays, 1963). The facilitatory influence exerted by the basolateral division on ACTH secretion has been confirmed by electrical stimulation of the amygdala (McHugh and Smith, 1967a; 1967b; Mandell, et al., 1963; Mason, 1959; Matheson et al., 1971; Redgate, 1970; Rubin et al., 1966; Setekleiv, 1961; Slusher and Hyde, 1961). On the basis of these findings it is possible that the acute pituitary-adrenocortical activation, which is normally exhibited in response to the mild stress of environmental novelty (Mason, 1972; Bassett and Cairncross, 1973), may not occur in the amygdalectomized animal.

Secondly, corticosteriods have been implicated in the regulation of exploratory behaviour (Levine, Madden, Moskal and Anderson, 1973; Tamasy, Koranyi, Liscak and Jandala, 1973). Levine et al. (1973) have demonstrated that preshock, which produces a marked increase in the reactivity of the pituitary-adrenocortical axis (Levine et al., 1973; Chalmers, Hoff and Levine, 1974), results in the suppression of open field exploration. In addition, Tamasy et al. (1973) have demonstrated that open field exploration is suppressed by the exogenous administration of hydrocortisone. Taken together, these findings offer some support for Endroczi's (1972) contention that exploratory activity and the level of circulating corticosteriods are inversely correlated parameters.

Therefore the present study investigated the relationship between amygdaloid damage and the intraperitoneal injection of the synthetic hydrocortisone analogue, betamethasone (9α - Fluoro - 16β - methyl-prednisolone) in the regulation of exploratory behaviour.

Structurally, betamethasone is a member of the pregnene steriod series (Travis and Sayers, 1965) which additionally includes hydrocortisone, corticosterone, the principal steroid secreted by the rat adrenal cortex (Bush, 1953), dexamethasone, progesterone and pregnenolone (Van Wimersma Greidanus, 1970).

In the measurement of exploratory behaviour, the approach towards a specific novel stimulus and general locomotor exploration were differentiated. In addition, attention was paid to the distinction between the short- and long-term habituation of exploratory behaviour.

METHOD

Animals

Twenty-eight naive male hooded rats weighing between 320g and 470g were used. They were singly housed under conditions of constant illumination. Food and water were available ad libitum.

Surgery

The animals were divided into two groups of fourteen for the purposes of surgery. One group received bilateral amygdalectomies while the second group was subjected to a control operation.

Surgery was performed under sodium pentothal anaesthesia (40 mg/Kg), supplemented by ether. Radio frequency lesions were made stereotactically by passing 0,2V for 20 seconds through the uninsulated (1mm) tip of an insect pin. The circuit was completed by means of an anal electrode. Lesions were placed 2,5mm posterior to the bregma, 4,3mm lateral to the midline and 8,35mm below the dura mater. In the control procedure, the insect pin was lowered into the amygdala, but no current was passed.

Immediately after surgery each animal received 75,000 units of penicillin injected subcutaneously.

Apparatus

A white-painted T-maze was used (Fig. 1). The stimulus box was painted with alternating black and white stripes which covered the floor and walls. A guillotine door separated the stimulus box from the rest of the maze. The main runway and the two arms of the maze were each bisected by a single black line (represented by means of dotted lines in Fig. 1) painted along the floor and side walls. The entire maze was fitted with a hinged perspex roof. Testing was carried out under normal fluorescent room lighting.

Procedure

After a twelve-day recovery period, the fourteen amygdalectomized animals were divided into two groups each consisting of 7 animals. One group (AM-B) received betamethasone phosphate (Betsolan Soluble, Glaxo-Allenbury) injected intraperitoneally. The betamethasone dosage was 0,37mg/Kg. On the basis of data presented by Knigge (1961), this dosage was considered to adequately compensate for the decreased corticosteriod levels exhibited by amygdalectomized rats during immobilization stress. The remaining

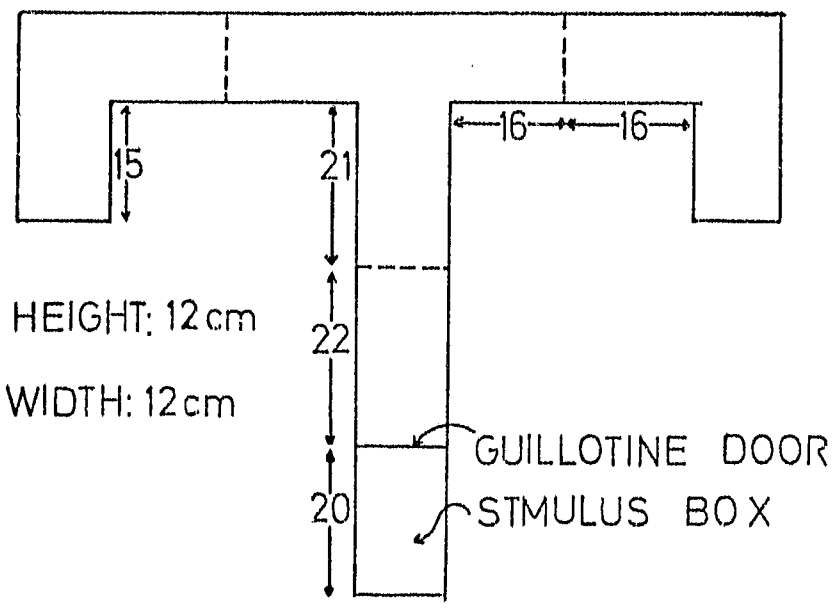

Fig 1. The T-maze used in Experiment 1. (All measurements are expressed in cms)

amygdalectomized group (AM-S) received intraperitoneal injections of equivalent volumes of sterile isotonic saline (0,9% m/v NaCl). Injected volumes ranged from 0,05ml to 0,08ml. The control operated animals were similarly divided, one group (NC-B) receiving betamethasone (0,37mg/Kg), while the remaining group (NC-S) received equivalent volumes of saline.

Betamethasone and saline injections were carried out 2 hours prior to each experimental session under light etherization. It was felt that etherization would reduce differential endogenous adrenocortical activity in response to immobilization during injection in amygdalectomized and intact animals. This contention is based on the finding that amygdaloid damage retards the pituitary-adrenal response to immobilization (Rigge, 1961), but not in response to physiological or 'systemic' stressors such as shock (Mason, Nauta, Brady. Robinson and Sachar, 1961 cited by Grueninger and Grueninger, 1973). Further indirect evidence suggesting that the amygdala is unnecessary for the pituitary-adrenocortical response to systemic stressors is provided by Feldman (1970), who demonstrated a normal response to ether stress in animals with deafferentation of the hypothalamus.

The experiment consisted of three 15-minute sessions, separated from one another by 24 hours. The first session constituted an adaptation session, while the second and third sessions were test sessions. Throughout the adaptation session, the guillotine door separating the stimulus box from the rest of the maze remained closed. Two hours after receiving either betamethasone or saline, each animal was placed in the left-hand goal box and was allowed to explore the maze, with the exception of the stimulus box. The number of lines crossed during three consecutive 5-minute periods was counted; this measure constituted an index of general exploratory activity.

During the second and third sessions, the guillotine door remained open. Two hours after receiving either betamethasone or saline, each animal was placed in the left-hand goal box. The session began when the first line was crossed. Thereafter the number of lines crossed and the number of stimulus box entries were counted over three consecutive 5-minute periods. In addition the amount of time spent in the stimulus box was manually timed to the nearest 0,5 second. The number of stimulus box entries and the amount of time spent in the stimulus box constituted indices of approach or orientation towards the novel stimulus object. The procedure during the second and third sessions was identical in all respects.

amygdalectomized group (AM-S) received intraperitoneal injections of equivalent volumes of sterile isotonic saline (0,9% m/v NaCl). Injected volumes ranged from 0,05ml to 0,08ml. The control operated animals were similarly divided, one group (NC-B) receiving betamethasone (0,37mg/Kg), while the remaining group (NC-S) received equivalent volumes of saline.

Betamethasone and saline injections were carried out 2 hours prior to each experimental session under light etherization. It was felt that etherization would reduce differential endogenous adrenocortical activity in response to immobilization during injection in amygdalectomized and intact animals. This contention is based on the finding that amygdaloid damage retards the pituitary-adrenal response to immobilization (Knigge, 1961), but not in response to physiological or 'systemic' stressors such as shock (Mason, Nauta, Brady. Robinson and Sachar, 1961 cited by Grueninger and Grueninger, 1973). Further indirect evidence suggesting that the amygdala is unnecessary for the pituitary-adrenocortical response to systemic stressors is provided by Feldman (1970), who demonstrated a normal response to ether stress in animals with deafferentation of the hypothalamus.

The experiment consisted of three 15-minute sessions, separated from one another by 24 hours. The first session constituted an adaptation session, while the second and third sessions were test sessions. Throughout the adaptation session, the guillotine door separating the stimulus box from the rest of the maze remained closed. Two hours after receiving either betamethasone or saline, each animal was placed in the left-hand goal box and was allowed to explore the maze, with the exception of the stimulus box. The number of lines crossed during three consecutive 5-minute periods was counted; this measure constituted an index of general exploratory activity.

During the second and third sessions, the guillotine door remained open. Two hours after receiving either betamethasone or saline, each animal was placed in the left-hand goal box. The session began when the first line was crossed. Thereafter the number of lines crossed and the number of stimulus box entries were counted over three consecutive 5-minute periods. In addition the amount of time spent in the stimulus box was manually timed to the nearest 0,5 second. The number of stimulus box entries and the amount of time spent in the stimulus box constituted indices of approach or orientation towards the novel stimulus object. The procedure during the second and third sessions was identical in all respects.

Erratum.

Page 8, line 15 of Results should read:

"p 0,01), as well as the long - term habituation of stimulus box entries (Days x Lesion: F = 7,86; df = 1/24; p 0,01). This effect is demonstrated in Fig. 3."

The following criteria were employed in scoring general exploratory activity and orientation: (i) a line was considered to have been crossed when all four limbs had passed over the line; (ii) the stimulus box was considered to have been entered when the animal's head and shoulders had passed beneath the raised guillotine door; (iii) when the head and shoulders had passed beneath the raised guillotine door in the opposite direction, the animal was considered to have left the stimulus box.

RESULTS

Data were analyzed by means of mixed design analyses of variance.* General exploratory activity during adaptation was subjected to a 3 factor analysis of variance with repeated measures on one factor (Appendix A, table 1). The following variables were subjected to 4 factor analyses of variance with repeated measures on two factors: (i) general exploratory activity during the second and third sessions (Appendix A, table 2); (ii) time spent in the stimulus box (Appendix A, table 3); (iii) stimulus box entries (Appendix A, table 4).

During adaptation, both amygdaloid damage and betamethasone administration failed to influence the overall level of general exploratory activity, or the rate at which activity habituated across 5-minute periods. However, during the test sessions a number of group differences were apparent. As shown in Fig. 2, amygdalectomy attenuated the long term habituation of general exploratory activity (Days x Lesions: $F = 6,50$; $df = 1/24$; $p < 0,01$). This effect is demonstrated in Fig. 3.

Habituation across periods during the test sessions was generally uninfluenced by the lesion. However, as can be seen from Fig. 4, betamethasone accelerated the short-term habituation of general exploratory activity (Periods x Hormone: $F = 8,13$; $df = 2/48$; $p < 0,01$).

No clear-cut evidence for a differential betamethasone influence on habituation in lesioned and intact animals was obtained.

The amount of time spent in the stimulus box was uninfluenced by amygdaloid damage or betamethasone, although there was a general tendency to spend less time in the stimulus box during session 3 than during session 2 ($F = 25,74$; $df = 1/24$; $p < 0,001$). Observation indicated that the animals engaged in a number of non-exploratory activities such as grooming, sitting and dozing, while in the stimulus box.

---

* Please see Appendix C.

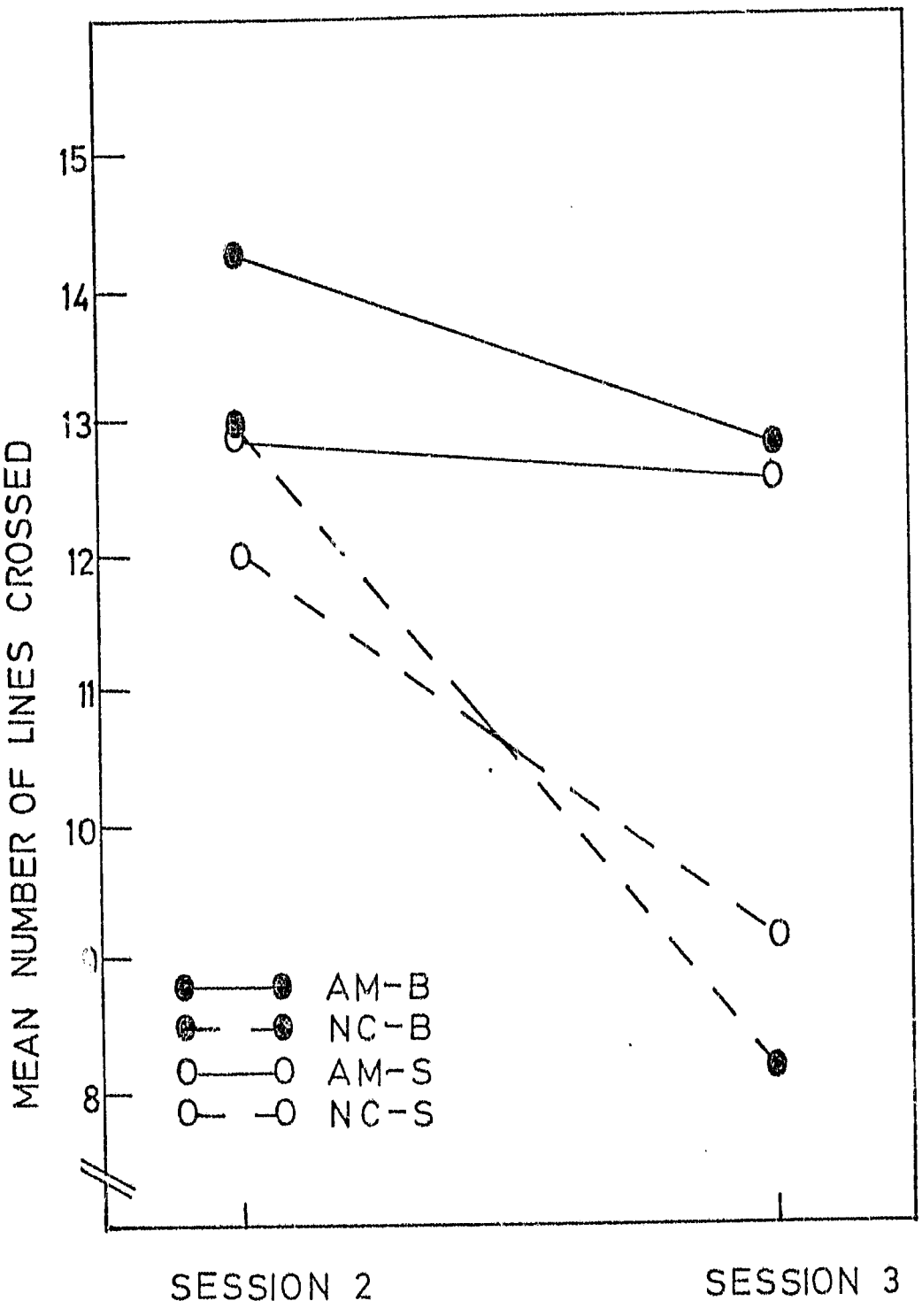

Fig 2 The mean number of lines crossed by the different groups during the second and third sessions

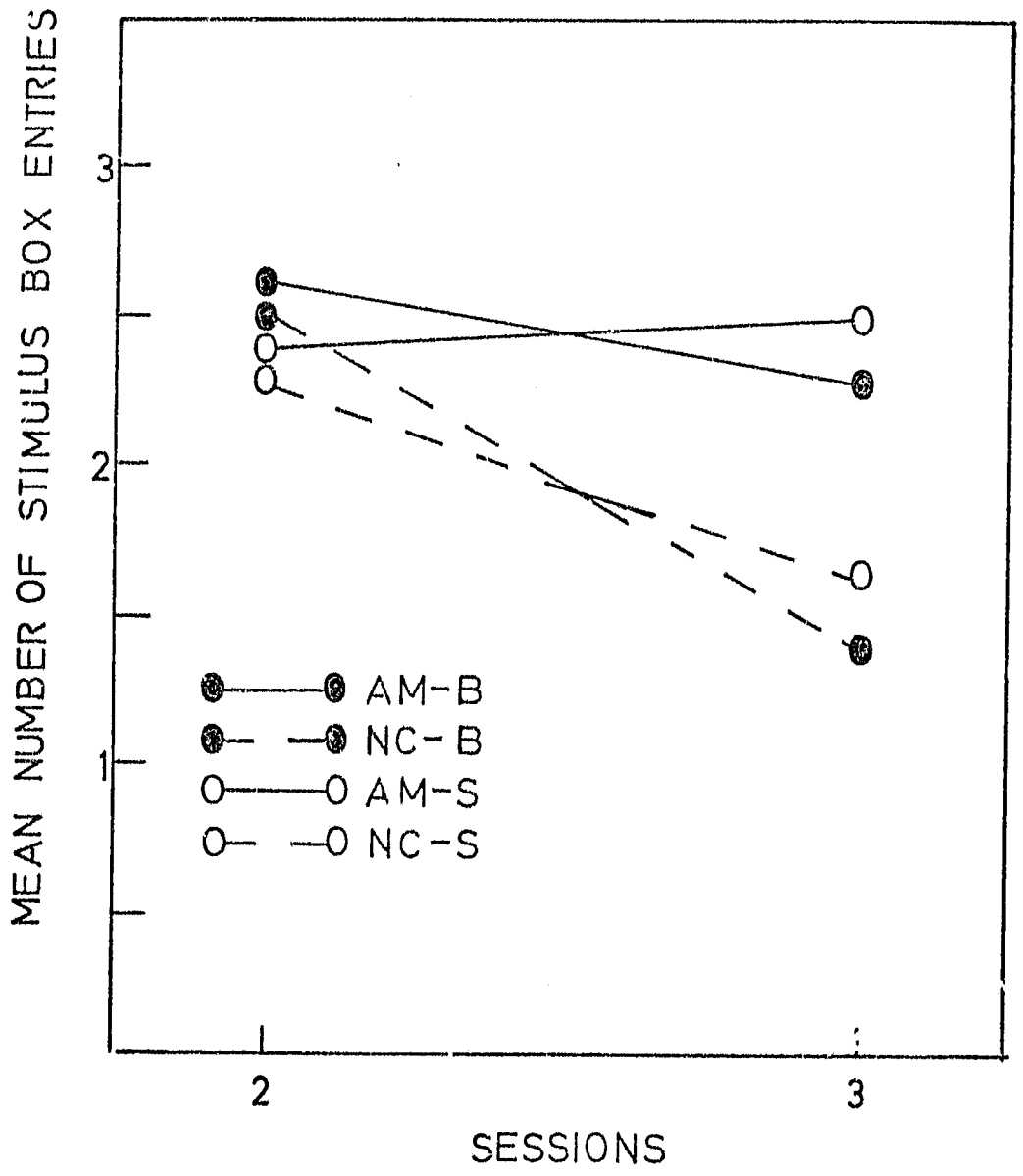

Fig 3. The mean number of stimulus box entries by the different groups during the second and third sessions

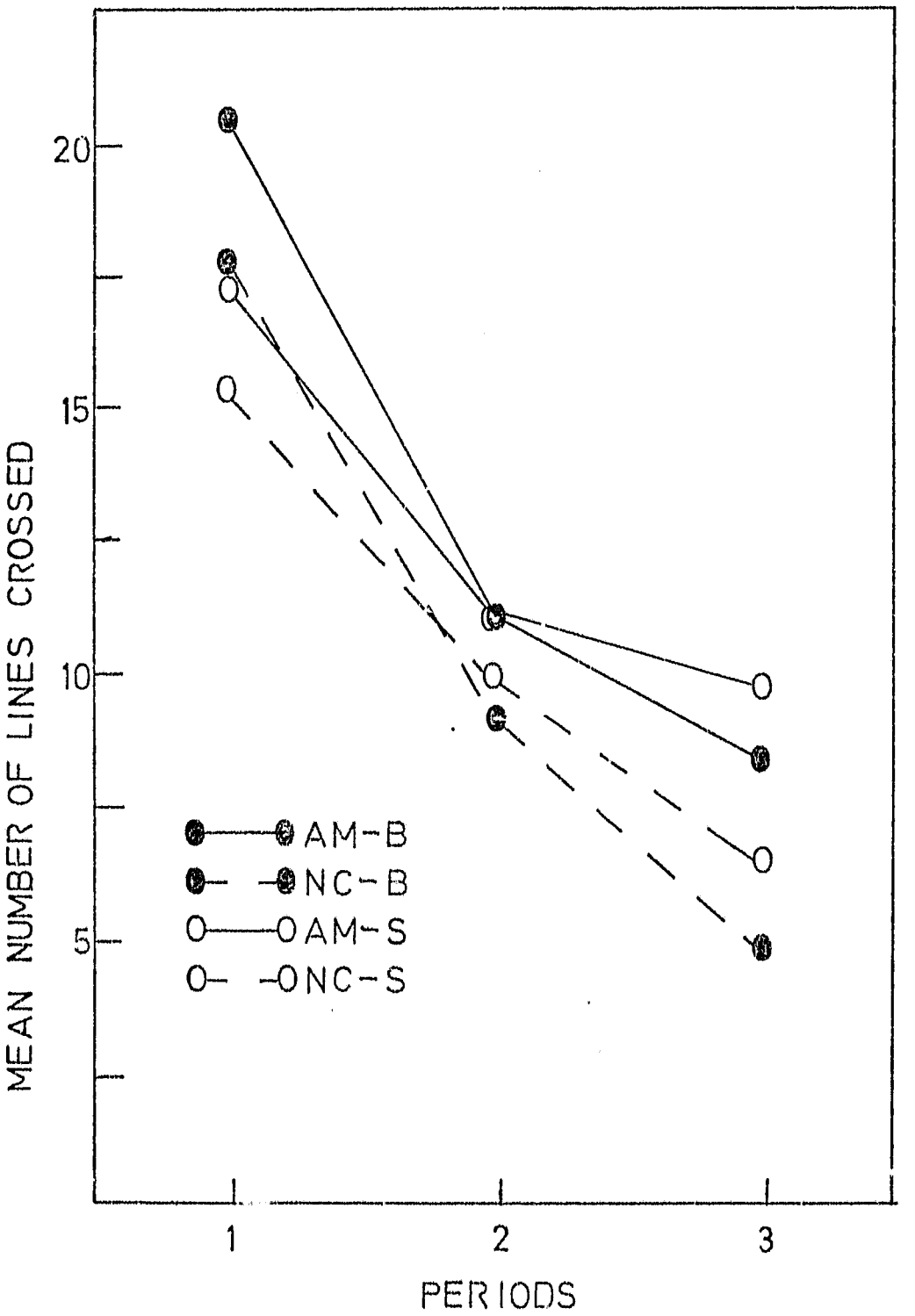

Fig 4. The mean number of lines crossed by groups AM-B, AM-S, NC-B and NC-S during periods 1, 2 and 3 averaged across the second and third sessions

DISCUSSION

The results of the present experiment indicate that the long-term habituation deficit, induced by amygdaloid damage, was uninfluenced by betamethasone. Similarly, the hormone exerted no influence on long-term habituation in the intact animals. These findings are paralleled, to some extent, by the failure of large doses of hydrocortisone (10mg/Kg) to alter the long-term habituation of open field exploration (Tamasy, et al., 1973), suggesting that the absence of a betamethasone effect is not attributable to the lower dosage employed in the present experiment. In addition, the absence of a long-term betamethasone effect is not readily attributable to the acute administration of the hormone, since corticosteriods may influence central nervous system activity for prolonged periods, in excess of twenty-four hours (Koranyi, 1973; Koranyi, Beyer and Guzman-Flores, 1971).

Although amygdalectomy failed to influence short-term habituation, betamethasone accelerated the short-term habituation of general exploratory activity in amygdalectomized and intact animals. In terms of mean differences, this effect was small and was apparent during the second and third sessions, but not during adaptation. Hormonal failure to influence behaviour on the same day as its first administration has also been observed in connection with dexamethasone (9α - Fluoro - 16α - methylprednisolone, 1,0mg/Kg) (Peatty, Scouten and Beatty, 1971), and does not, in itself, appear to indicate an unreliability in the hormonal effect. However, betamethasone failed entirely to influence the short-term habituation of stimulus box entries. This finding does suggest that the betamethasone influence on habituation is potentially unstable.

Amygdaloid and betamethasone influences in the present study were restricted to the habituation of exploratory activity. Contrary to the findings of Tamasy et al. (1973), betamethasone did not alter the overall level of exploratory activity. Similarly, overall levels of exploration were not affected by amygdalectomy. In this respect the present findings are in disagreement with those of Anderson (1970), Corman et al. (1967), Schaefer et al. (1974) and Schwartzbaum and Gay (1966). However, the amygdalectomy-induced disturbance in habituation is consonant with the habituation deficit described by Schaefer et al. (1974) and Schwartzbaum et al. (1961).

Taken together, the results of the present experiment suggest that the amygdaloid and betamethasone influences on habituation are independent since they occurred under mutually exclusive circumstances.

It may be argued that this independence reflects amygdaloid and betamethasone participation in separate behavioural functions. Nadel (1966) has suggested that the intersession habituation of exploratory behaviour is dependent upon the long-term storage of an adequate environmental representation, whereas the intrasession habituation of exploratory behaviour reflects the operation of an inhibitory mechanism. While doubt has been cast upon amygdaloid involvement in behavioural inhibition (Douglas and Pribram, 1969; Slotnick, 1973), the amygdala has been implicated in the mediation of the electroconvulsive (Kesner and Conner, 1974; Kesner and Doty, 1967; 1968; McIntyre, 1970) and hypothermic (Gehres, Randall, Riccio and Vardaris, 1973) disruption of memory. It is therefore suggested that the amygdalectomy-induced disturbance in long-term habituation is partially or wholly attributable to a concomitant disturbance in the storage of environmental information. On the other hand, the betamethasone-induced acceleration of short-term habituation is compatible with electrophysiological (Koranyi, 1973; Koranyi, Beyer and Guzman-Flores, 1971; Koranyi and Endroczi, 1970) and behavioural (Bohus, 1970; Endroczi, 1972; Levine, 1968; van Wimersma Greidanus, 1970) evidence implicating corticosteriods in the enhancement of internal inhibition.

A separation of amygdaloid and pituitary-adrenocortical function has also been demonstrated with respect to the incubation of adversively conditioned responses (Suboski, Marquis, Black and Platenuis, 1970) and emotionality (Montgomery, Berkut, Grubb, Westbrook, 1971; Montgomery, Berkut, May and Moore, 1971). However, with respect to the acquisition of active avoidance responses, there are indications that the amygdala and pituitary-adrenocortical axis function co-operatively (Bush, Lovely and Pagano, 1973), suggesting that the degree of co-operation between the two systems is related to the behaviour in question.

EXPERIMENT 2

Experiment 1 provided some indication that the betamethasone effect on short-term habituation is unstable. Consequently, the present experiment re-examined the effect of betamethasone on the exploratory behaviour of amygdalectomized and intact animals in an attempt to assess its generality and stability.

METHOD

Animals

The same animals as were used in experiment I served as subjects. However, a further animal in group NC-B and one animal in group NC-S died before completion of the experiment.

Histology

On completion of the experiment all animals were intracardially perfused with saline followed by a 10% solution of formalin. The brains were sectioned by means of a frozen tissue technique and the unstained sections were mounted for examination.

Apparatus

The testing enclosure consisted of a steel, perspex-fronted cage measuring 96cm x 36cm x 23cm. The floor and back wall of the cage were divided into 3 equal sections by means of two black lines. The novel object consisted of a white 3cm x 3cm x 6cm wooden rectangle. Two equilateral triangles were painted in black on each of the four 3cm x 6cm faces of the rectangle. The rectangle was supported from the roof of the cage during the second and third sessions such that the lower face was 17cm above the floor of the cage. Thus, in order to make oral or nasal contact with the rectangle, animals were required to rear towards it. Testing was carried out in a dark, sound attenuating room, animals being observed through a one-way mirror. The interior of the cage was indirectly illuminated by two 60 watt red bulbs shone obliquely through the perspex front of the cage.

Procedure

Experiment II commenced twenty-one days after the completion of experiment I, and consisted of three 15-minute sessions, separated from one another by 24 hours. Two hours prior to the start of each session groups AM-B and NC-B received intraperitoneal injections of betamethasone (0,37mg/Kg), while groups AM-S and NC-S received equivalent volumes of saline. All injections were carried out under light etherization.

During the adaptation session, animals were allowed to explore the empty cage. The number of lines crossed and the number of rears were counted over three consecutive 5-minute periods, providing indices of general exploratory activity. During the second and third sessions, the

wooden rectangle was suspended from the roof of the cage. The duration of rearing towards the rectangle was manually timed to the nearest 0,5 second, over three consecutive 5-minute periods. Timing commenced when oral or nasal contact with the block was initiated and ceased when the forelegs were returned to the floor of the cage. This measure constituted an index of orientation towards the novel stimulus object.

In addition, the number of lines crossed and the number of rears were counted over the three consecutive 5-minute periods. A line was considered to have been crossed when all four limbs had passed over it. Rearing was defined as lifting the forelegs from the ground and extending the body vertically.

After each run, faecal boli were removed and the cage was cleaned out with a weak solution of alcohol.

Testing was carried out between 9h00 and 18h00. Individual animals were tested at the same time on each day.

RESULTS

Source tables for the analyses of variance are presented in Appendix B.

The only significant group difference obtained was in terms of rearing during adaptation. As shown in Fig. 5, the betamethasone-injected animals exhibited a continuous decrease in rearing across periods, whereas the saline-injected animals exhibited a slight increase in rearing over the second and third periods (Periods x Hormone: $F = 3,53$; $df = 2/48$; $p < 0,05$). Figure 6 indicates that this effect was more pronounced for the non-lesioned animals (Periods x Hormone x Lesion: $F = 3,63$; $df = 2/48$; $p < 0,05$), and is largely dependent upon the exaggerated activity of group NC-S during the third period. The pattern of activity was not exhibited during the second and third sessions and may be considered to be atypical.

There was a general tendency to habituate over sessions in terms of general exploratory activity ($F = 15,40$; $df = 1/24$; $p < 0,001$), rearing ($F = 6,61$; $df = 1/24$; $p < 0,025$) and exploratory time ($F = 4,82$; $df = 1/24$; $p < 0,05$). There was also a general tendency to habituate over periods in terms of general exploratory activity ($F = 24,07$; $df = 2/48$; p 0,001), and rearing ($F = 56,19$; $df = 2/48$; $p < 0,001$), but not in terms of exploration. The Periods X Days interaction for exploratory time fell just short of significance (Periods X Days: $F = 3,18$; $df = 2/48$).

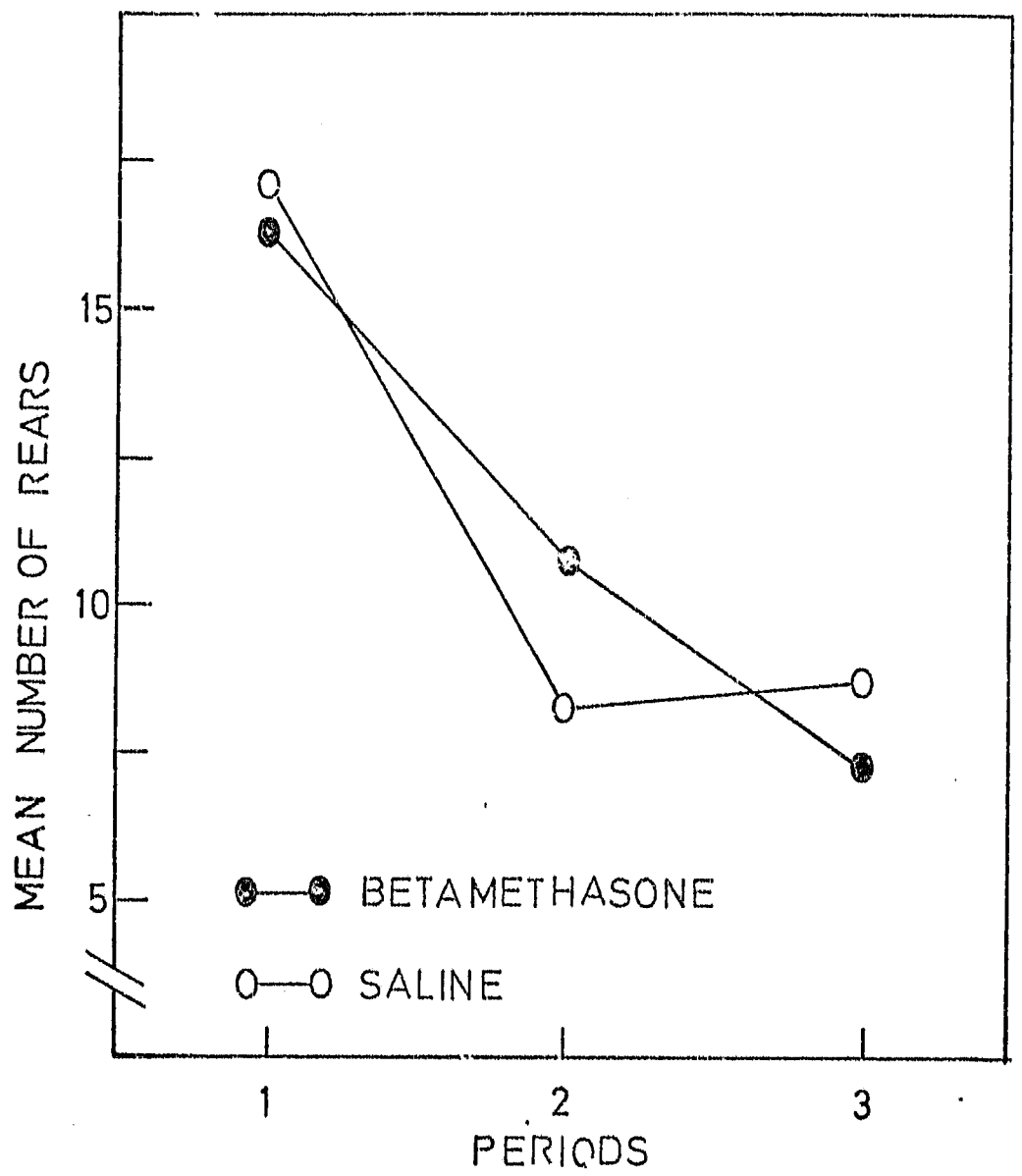

Fig 5. The mean number of rears during adaptation for the two betamethasone injected and the two saline-injected groups.

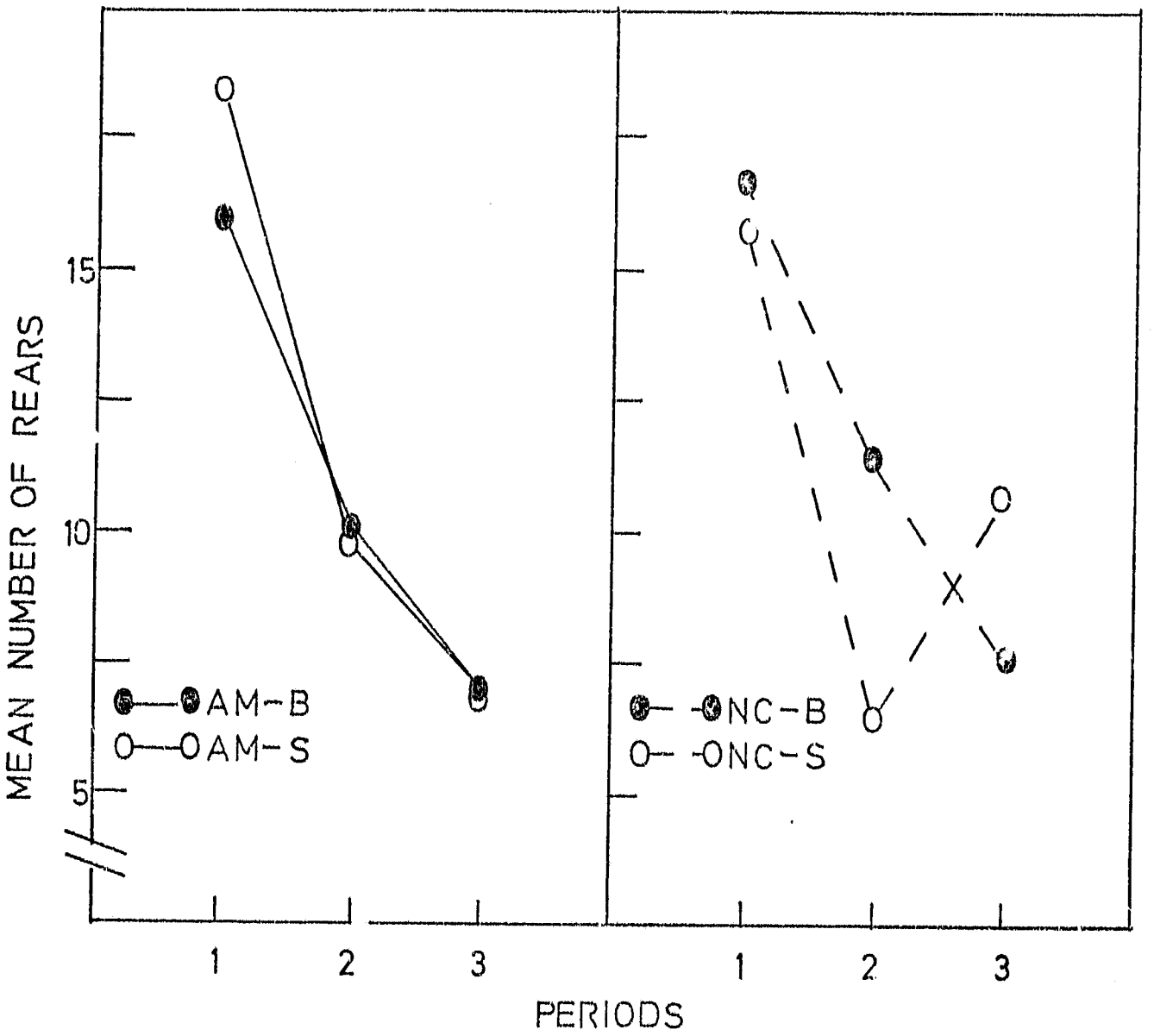

Fig 6. The mean number of rears for groups AM-B, AM-S, NC-B and NC-S during adaptation

Histological results

Histological examination revealed extensive bilateral destruction of the corticomedial and basolateral divisions of the amygdala, although unilateral sparing of the medial amygdaloid nucleus was evident in four animals. At their maximal extent, lesions typically invaded the internal capsule, caudate-putamen, claustrum and pyriform cortex. One animal sustained unilateral damage to the optic tract. In two animals the lesions were markedly assymmetrical, the lesion on one side being larger than the contralateral lesion. In the first case the smaller lesion involved only the cortical amygdaloid nucleus and the medial division of the basal amygdaloid nucleus, whereas the contralateral lesion spared these nuclei. In the second case, the smaller lesion involved only the lateral division of the basal amygdaloid nucleus, whereas the contralateral lesion involved the posterior division of the lateral amygdaloid nucleus in addition to the lateral division of the basal amygdaloid nucleus.

The lesions typically extended from the fornico-hippocampal junction, anteriorly, to the first appearance of the ventral hippocampus posteriorly, thus sparing the anterior amygdaloid area and the caudal portions of the cortical, medial, lateral and basal nuclei.

DISCUSSION

The disappearance of the betamethasone influence on habituation appears to confirm the impression that the effect is unstable. Alternatively, it may be argued that the betamethasone influence was obliterated by the effects of previous test experience. This interpretation is consonant with the work of Levine, Madden, Conner, Moskal and Anderson (1973), who have demonstrated that pre-shock, administered two weeks prior to open field testing, increased the reactivity of the pituitary-adrenocortical axis with a concomitant suppression of exploratory activity. It is possible that the stress associated with Experimentation acted in a manner analogous to preshock and thereby minimized group differences in the level of circulating corticosteriods. Within the context of the present experiment, however, these alternatives cannot be resolved.

The absence of an amygdaloid influence on exploration is consonant with the findings of Corman, Meyer and Meyer (1967). These authors failed to demonstrate amygdaloid-induced increments in exploration after a post-operative recovery period of three weeks, without intervening test experience, indicating that the passage of time per se is sufficient for the obliteration of amygdalectomy-induced changes in exploration.

Thus, the present results confirm the temporary nature of the amygdaloid influence on exploration and cast some doubt on the stability of the betamethasone influence on habituation.

GENERAL DISCUSSION

The findings of the two experiments comprising the present study do not permit a definite conclusion on the role of the amygdalo-pituitary-adrenocortical relationship in the regulation of exploratory behaviour. While it is tempting to suggest, on the basis of the results of Experiment 1, that the amygdaloid modulation of pituitary-adrenocortical function has little significance for the regulation of exploratory behaviour, these findings should be interpreted strictly in relation to the specific steroid and dosage employed in the present study. Furthermore, interpretation of the present findings should be tempered by the failure to replicate the amygdalectomy- and betamethasone-induced changes in the habituation of exploratory activity (Experiment 2).

Comparative studies of the role of hormones comprising the pregnene series in exploration are indicated, as are dose-response investigations.

REFERENCES

Anderson, R.A. Appetitively motivated general activity in rats with limbic lesions. Physiology and Behaviour, 1970, 5, 755-761.

Atunes-Rodrigues, J., Negro-Vilar, A. and Covian, M.R. Role of adrenals in the changes of sodium chloride intake following lesions in the central nervous system. Physiology and Behaviour, 1970, 5, 89-93.

Bagshaw, M.H. and Benzies, S. Multiple measures of the orienting reaction to a simple non-reinforced stimulus after amygdalectomy in monkeys. Experimental Neurology, 1968, 20, 175-187.

Bagshaw, M.H. and Coppock, H.W. GSR conditioning deficit in amygdalectomized monkeys. Experimental Neurology, 1968, 20, 188-196.

Bagshaw, M.H., Kimble, D.P. and Pribram, K.H. The GSR of monkeys during orientation and habituation after ablation of the amygdala, hippocampus and inferotemporal cortex. Neuropsychologia, 1965, 3, 111-119.

Bagshaw, M.H., Mackworth, N.H. and Pribram, K.H. The effect of resections of the inferotemporal cortex or the amygdala on visual orienting and habituation. Neuropsychologia, 1972, 10, 153-162.

Bassett, J.R. and Cairncross, K.D. Parameters of novelty, shock predictability and response contingency on corticosterone release in the rat. Physiology and Behaviour, 1973, 10, 901-907.

Beatty, W.W., Scouten, C.W. and Beatty, P.A. Differential effects of dexamethasone and body weight loss on two measures of activity. Physiology and Behaviour, 1971, 7, 869-871.

Bohus, B. Central nervous structures and the effect of ACTH and corticosteroids on avoidance behaviour: A study with intracerebral implantation of corticosteriods in the rat. Progress in Brain Research, 1970, 32, 171-184.

Bovard, E.W. and Gloor, P. Effect of amygdaloid lesions on plasma corticosterone response of the albino rat to emotional stress. Experientia, 1961, 17, 521-526.

Bush, I.E. Species differences in adrenocortical secretion. Journal of Endocrinology, 1953, 9, 95-100.

Bush, D.F., Lovely, R.H. and Pagano, R.R. Injection of ACTH induces recovery from shuttlebox avoidance deficit in rats with amygdaloid lesions. Journal of Comparative and Physiological Psychology, 1973, 83, 168-172.

Chalmers, D.V., Hoff, J.C. and Levine, S. The effects of prior aversive stimulation on the behavioural and physiological responses to intense acoustic stimuli in the rat. Physiology and Behaviour, 1974, 12, 711-717.

Corman, C.D., Meyer, P.M. and Meyer, D.R. Open field activity and exploration in rats with septal and amygdaloid lesions. Brain Research, 1967, 5, 469-476.

Douglas, R.J. Transposition, novelty and limbic lesions. Journal of Comparative and Physiological Psychology, 1966, 62, 354-357.

Douglas, R.J. and Pribram, K.H. Learning and limbic lesions. Neuropsychologia, 1966, 4, 197-220.

Douglas, R.J. and Pribram, K.H. Distraction and habituation in monkeys with limbic lesions. Journal of Comparative and Physiological Psychology, 1969, 69, 473-480.

Eleftheriou, , Zolovick, A.J. and Pearse, R. Effect of amygdaloid lesions on pituitary-adrenal axis in the deermouse. Proceedings of the Society for Experimental Biology and Medicine, 1966, 122, 1259.

Endroczi, E. Pavlovian conditioning and adaptive hormones. In S. Levine (Ed.) Hormones and Behaviour. New York: Academic Press, 1972, Pp. 173-207.

Feldman, S. Discussion. Progress in Brain Research, 1970, 32, 10.

Gehres, L.D., Randall, C.L., Riccio, D.C. and Vardaris, R.M. Attenuation of hypothermic retrograde amnesia produced by pharmacological blockade of brain seizures. Physiology and Behaviour, 1973, 10, 1011-1017.

Goddard, G.V. Functions of the amygdala. Psychological Bulletin, 1964, 62, 89-109.

Holdstock, T.L. Autonomic reactivity following septal and amygdaloid lesions in white rats. Physiology and Behaviour, 1969, 4, 603-607.

Jackson, W.J. and Gardner, E.L. Modulation of hypothalamic ICSS by concurrent limbic stimulation. Physiology and Behaviour, 1974, 12, 177-182.

Jonason, K.R., Enloe, L.J., Contrucci, J. and Meyer, P.M. Effects of simultaneous and successive septal and amygdaloid lesions on social behaviour in the rat. Journal of Comparative and Physiological Psychology, 1973, 83, 54-61.

Kant, K.J. Influences of amygdala and medial forebrain bundle on self-stimulation in the septum. Physiology and Behaviour, 1969, 4, 777-784.

Kesner, R.P. and Conner, H.S. Effects of electrical stimulation of rat limbic system and midbrain reticular formation upon short- and long-term memory. Physiology and Behaviour, 1974, 12, 5-12.

Kesner, R.P. and Doty, R.W. Effects of local electroconvulsive stimulation in the production of retrograde amnesia. Psychonomic Bulletin, 1967, 1, 27.

Kesner, R.P. and Doty, R.W. Amnesia produced in cats by local seizure activity initiated from the amygdala. Experimental Neurology, 1968, 21, 58-68.

Kling, A., Lancaster, J. and Benitone, J. Amygdalectomy in the free-ranging vervet (cercopithecus aethiops). Journal of Psychiatric Research, 1970, 7, 191-199.

Knigge, K.M. Adrenocortical response to stress in rats with lesions in hippocampus and amygdala. Proceedings of the Society for Experimental Biology and Medicine, 1961, 108, 18-21.

Knigge, K.M. and Hays, M. Evidence of the inhibitive role of hippocampus in neural regulation of ACTH release. Proceedings of the Society for Experimental Biology and Medicine, 1963, 114, 67-69.

Koranyi, L. Effects of adrenal steroids on brain function and behaviour. Progress in Brain Research, 1973, 39, 111-123.

Koranyi, L., Beyer, C. and Guzman-Flores, C. Multiple unit activity during habituation, sleep-wakefulness cycle and the effect of ACTH and corticosteroid treatment. Physiology and Behaviour, 1971, 7, 321-329.

Koranyi, L. and Endroczi, E. Influence of pituitary-adrenocortical hormones on thalamocortical and brain stem limbic circuits. Progress in Brain Research, 1970, 32, 120-130.

Levine, S. Hormones and conditioning. In W.J. Arnold (Ed.) Nebraska Symposium on Motivation. Lincoln: University of Nebraska Press, 1968, Pp. 85-101.

Lico, M.C., Hoffman, A. and Covian, M.R. Influence of some limbic structures upon somatic and autonomic manifestations of pain. Physiology and Behaviour, 1974, 12, 805-811.

Levine, S., Madden, J., Conner, R.L., Moskal, J.R. and Anderson, D.C. Physiological and behavioural effects of prior aversive stimulation (preshock) in the rat. Physiology and Behaviour, 1973, 10, 467-471.

Mandell, A.J., Chapman, L.F., Rand, R.W. and Walter, R.D. Plasma corticosteroids: changes in concentration after stimulation of hippocampus and amygdala. Science, 1963, 139, 1212.

Mason, J.W. Plasma 17-hydroxycorticosteroid levels during electrical stimulation in the amygdaloid complex in conscious monkeys. American Journal of Physiology, 1959, 196, 44-48.

Mason, J.W. Organization of psychoendocrine mechanisms. In N.S. Greenfield and R.A. Sternbach (Eds.) Handbook of Psychophysiology. New York: Holt, Rinehart and Winston, 1972, Pp. 3-91.

Mason, J.W., Nauta, W.J.H., Brady, J.B., Robinson, J.A. And Sachar, E.J. The role of limbic system structures in the regulation of ACTH secretion. Acta Neurovegetativa, 1961, 23, 4-14, cited by W. Greuninger and J. Greuninger. The primate frontal cortex and allasostasis. In K.H. Pribram and A.H. Luria (Eds.) The psychophysiology of the frontal lobes. New York: Academic Press, 1973, Pp. 253-290.

Matheson, G.K., Branch, B.J. and Taylor, A.N. Effects of amygdaloid stimulation on pituitary-adrenal activity in conscious cats. Brain Research, 1971, 32, 151-167.

McHugh, P.R. and Smith, G.P. Plasma 17-OHCS response to amygdaloid stimulation with and without after-discharges. American Journal of Physiology, 1967a, 212, 619-622.

McHugh, P.R. and Smith, G.P. Negative feedback in adrenocortical response to limbic stimulation in Macaca mulatta. American Journal of Physiology, 1967b, 213, 1445-1450.

McIntyre, D.C. Differential amnestic effects of cortical versus amygdaloid elicited convulsions in rats. Physiology and Behaviour, 1970, 5, 747-753.

Montgomery, R.L., Berkut, M.K., Grubb, E.F. and Westbrook, D.L. Hormonal influence on behaviour in brain lesioned male rats. Physiology and Behaviour, 1971, 7, 107-111.

Montgomery, R.L., Berkut, M.K., May, K.N. and Moore, J.B. Altered behaviour and its influence on endocrines and water metabolism. Physiology and Behaviour, 1971, 7, 873-876.

Nadel, L. Cortical spreading depression and habituation. Psychonomic Science, 1966, 5, 119-120.

Redgate, E.S. ACTH release evoked by electrical stimulation of brain stem and limbic system sites in the cat: the absence of ACTH release upon infundibular area stimulation. Endocrinology, 1970, 86, 806-823.

Rolls, B.J. and Rolls, E.T. Effects of lesions in the basolateral amygdala on fluid intake in the rat. Journal of Comparative and Physiological Psychology, 1973a, 83, 240-247.

Rolls, E.T. and Rolls, B.J. Altered food preferences after lesions in the basolateral region of the amygdala in the rat. Journal of Comparative and Physiological Psychology, 1973b, 83, 248-259.

Rubin, R.T., Mandell, A.J., and Crandall, P.H. Corticosteroid responses to limbic stimulation in man: localization of stimulus sites. Science, 1966, 153, 767-768.

Schaefer, C., Kreinick, C.J. and Schwartzbaum, J.S. Behavioural reactivity, appetitive behaviour and visual evoked potentials to photic stimuli following amygdaloid lesions in rats. Journal of Comparative and Physiological Psychology, 1974, 86, 793-811.

Schwartzbaum, J.S., Bowman, R.E. and Holdstock, L. Visual exploration in the monkey following ablation of the amygdaloid complex. Journal of Comparative and Physiological Psychology, 1964, 57, 453-456.

Schwartzbaum, J.S. and Gay, P.E. Interacting behavioural effects of septal and amygdaloid lesions in the rat. Journal of Comparative and Physiological Psychology, 1966, 61, 59-65.

Matheson, C.K., Branch, B.J. and Taylor, A.N. Effects of amygdaloid stimulation on pituitary-adrenal activity in conscious cats. Brain Research, 1971, 32, 151-167.

McHugh, P.R. and Smith, G.P. Plasma 17-OHCS response to amygdaloid stimulation with and without after-discharges. American Journal of Physiology, 1967a, 212, 619-622.

McHugh, P.R. and Smith, G.P. Negative feedback in adrenocortical response to limbic stimulation in Macaca mulatta. American Journal of Physiology, 1967b, 213, 1445-1450.

McIntyre, D.C. Differential amnestic effects of cortical versus amygdaloid elicited convulsions in rats. Physiology and Behaviour, 1970, 5, 747-753.

Montgomery, R.L., Berkut, M.K., Grubb, E.F. and Westbrook, D.L. Hormonal influence on behaviour in brain lesioned male rats. Physiology and Behaviour, 1971, 7, 107-111.

Montgomery, R.L., Berkut, M.K., May, K.N. and Moore, J.B. Altered behaviour and its influence on endocrines and water metabolism. Physiology and Behaviour, 1971, 7, 873-876.

Nadel, L. Cortical spreading depression and habituation. Psychonomic Science, 1966, 5, 119-120.

Redgate, E.S. ACTH release evoked by electrical stimulation of brain stem and limbic system sites in the cat: the absence of ACTH release upon infundibular area stimulation. Endocrinology, 1970, 86, 806-823.

Rolls, B.J. and Rolls, E.T. Effects of lesions in the basolateral amygdala on fluid intake in the rat. Journal of Comparative and Physiological Psychology, 1973a, 83, 240-247.

Rolls, E.T. and Rolls, B.J. Altered food preferences after lesions in the basolateral region of the amygdala in the rat. Journal of Comparative and Physiological Psychology, 1973b, 83, 248-259.

Rubin, R.T., Mandell, A.J., and Crandall, P.H. Corticosteroid responses to limbic stimulation in man: localization of stimulus sites. Science, 1966, 153, 767-768.

Schaefer, C., Kreinick, C.J. and Schwartzbaum, J.S. Behavioural reactivity, appetitive behaviour and visual evoked potentials to photic stimuli following amygdaloid lesions in rats. Journal of Comparative and Physiological Psychology, 1974, 86, 793-811.

Schwartzbaum, J.S., Bowman, R.E. and Holdstock, L. Visual exploration in the monkey following ablation of the amygdaloid complex. Journal of Comparative and Physiological Psychology, 1964, 57, 453-456.

Schwartzbaum, J.S. and Gay, P.E. Interacting behavioural effects of septal and amygdaloid lesions in the rat. Journal of Comparative and Physiological Psychology, 1966, 61, 59-65.

Schwartzbaum, J.S., Wilson, W.A. and Morrissette, J.R. The effects of amygdalectomy on locomotor activity in monkeys. Journal of Comparative and Physiological Psychology, 1961, 54, 334-336.

Setekleiv, J., Skaug, O.E. and Kaada, B.R. Increase in plasma 17-hydroxy-corticosteroids by cerebral cortical and amygdaloid stimulation in the cat. Journal of Endocrinology, 1961, 22, 119-127.

Slotnick, B.M. Fear behaviour and passive avoidance deficits in mice with amygdala lesions. Physiology and Behaviour, 1973, 11, 717-720.

Slusher, M.A. and Hyde, J.E. The effect of limbic stimulation on release of corticosteroids into the adrenal venous effluent of the cat. Endocrinology, 1961, 69, 1080-1084.

Suboski, M.D., Marquis, H.A., Black, M. and Platenius, P. Adrenal and amygdala function in the incubation of aversively conditioned responses. Physiology and Behaviour, 1970, 5, 283-289.

Tamasy, V., Koranyi, L., Lissak, K. and Jandala, M. Open field behaviour, habituation and passive avoidance learning: effect of ACTH and hydrocortisone on normal and adrenalectomized rats. Physiology and Behaviour, 1973, 10, 995-1000.

Thompson, C.I., Schwartzbaum, J.S. and Harlow, H.F. Development of social fear after amygdalectomy in infant Rhesus monkeys. Physiology and Behaviour, 1969, 4, 249-254.

Travis, R.H. and Sayers, G. Adrenocorticotrophic hormone; Adrenocortical steroids and their synthetic analogues. In L.S. Goodman and A. Gilman (Eds.) The pharmacological basis of therapeutics. New York: MacMillan, 1965, Pp. 1608-1648.

Turner, B.H. Sensorimotor syndrome produced by lesions of the amygdala and lateral hypothalamus. Journal of Comparative and Physiological Psychology, 1973, 82, 37-47.

Van Wimersma Greidanus, Tj. B. Effects of steroids on extinction of an avoidance response in rats: a structure - activity relationship study. Progress in Brain Research, 1970, 32, 185-191.

White, N.M. and Fisher, A.E. Relationship between amygdala and hypothalamus in the control of eating behaviour. Physiology and Behaviour, 1969, 4, 199-205.

APPENDIX A

TABLE 1

SOURCE TABLE FOR THE ANALYSIS OF VARIANCE ON GENERAL EXPLORATORY ACTIVITY DURING ADAPTATION

SOURCE OF VARIATION	SS	df	MS	F	P
Total	2891,51	83			
Between Subjects	1129,59	27			
A (Hormone)	44,40	1	44,40	1,10	
B (Lesion)	5,30	1	5,30	0,13	
AB	112,24	1	112,24	2,78	
Error	967,65	24	40,32		
Within Subjects	1761,92	56			
C (Periods)	1247,80	2	623,90	65,47	<0.001
CA	20,99	2	10,49	1,10	
CB	25,59	2	12,79	1,34	
CAB	10,23	2	5,12	0,54	
Error	457,31	48	9,53		

TABLE 2

SOURCE TABLE FOR THE ANALYSIS OF VARIANCE ON GENERAL EXPLORATORY ACTIVITY DURING SESSIONS 2 AND 3

SOURCE OF VARIATION	SS	df	MS	F	P
Total	7929,12	167			
Between Subjects	2813,61	27			
A (Hormone)	2,99	1	2,99	0,03	
B (Lesion)	246,74	1	246,74	2,31	
AB	3,90	1	3,90	0,04	
Error	2559,98	24	106,67		
Within Subjects	5115,51	140			
C (Periods)	3215,46	2	1607,73	199,97	<0,001
CA	130,73	2	65,37	8,13	<0.01
CB	22,18	2	11,09	1,38	
CAB	0,16	2	0,08	0,01	
Error	385,99	48	8,04		
D (Days)	256,04	1	256,04	21,00	<0,001
DA	32,07	1	32,07	2,63	
DB	79,27	1	79,27	6,50	<0,025
DAB	0,17	1	0,17	0,01	
Error	292,51	24	12,19		
CD	26,07	2	13,04	1,13	
CDA	3,40	2	1,70	0,15	
CDB	17,92	2	8,96	0,77	
CDAB	97,50	2	48,75	4,21	<0.05
Error	556,04	48	11,58		

TABLE 3

SOURCE TABLE FOR THE ANALYSIS OF VARIANCE ON THE AMOUNT OF TIME SPENT IN THE STIMULUS BOX

SOURCE OF VARIATION	SS	df	MS	F	P
Total	99534,17	167			
Between Subjects	35579,40	27			
A (Hormone)	1013,32	1	1013,32	0,75	
B (Lesion)	1636,89	1	1639,89	1,20	
AB	110,75	1	110,75	0,08	
Error	32818,44	24	1367,44		
Within Subjects	63954,77	140			
C (Periods)	2189,49	2	1094,75	3,11	
CA	1526,42	2	763,21	2,17	
CB	1904,47	2	952,23	2,71	
CAB	978,13	2	489,06	1,39	
Error	16906,04	48	352,21		
D (Days)	8697,59	1	8697,59	25,74	<0.001
DA	1188,27	1	1188,27	3,52	
DB	0,03	1	0,03	0,00	
DAB	91,23	1	91,23	0,27	
Error	8111,37	24	337,98		
CD	1200,73	2	600,36	1,47	
CDA	282,65	2	141,33	0,35	
CDB	459,81	2	229,90	0,56	
CDAB	746,91	2	373,46	0,92	
Error	19671,64	48	409,83		

TABLE 4

SOURCE TABLE FOR THE ANALYSIS OF VARIANCE ON STIMULUS BOX ENTRIES

SOURCE OF VARIATION	SS	dF	MS	F	P
Total	294,00	167			
Between Subjects	98,33	27			
A (Hormone)	0,13	1	0,13	0,04	
B (Lesion)	12,27	1	12,27	3,43	
AB	0,04	1	0,04	0,02	
Error	85,89	24	3,58		
Within Subjects	195,67	140			
C (Periods)	63,66	2	31,83	44,83	<0.001
CA	2,56	2	1,28	1,80	
CB	0,46	2	0,23	0,32	
CBA	2,32	2	1,16	1,63	
Error	34,14	48	0,71		
D (Days)	9,72	1	9,72	13,89	<0.005
DA	2,48	1	2,48	3,54	
DB	5,50	1	5,50	7,86	<0.01
DAB	0,03	1	0,03	0,04	
Error	16,70	24	0,70		
CD	3,30	2	1,65	1,51	
CDA	1,27	2	0,63	0,58	
CDB	0,04	2	0,02	0,02	
CDAB	1,31	2	0,65	0,60	
Error	52,18	48	1,09		

APPENDIX B

TABLE 1

SOURCE TABLE FOR THE ANALYSIS OF VARIANCE ON GENERAL EXPLORATORY ACTIVITY DURING ADAPTATION

SOURCE OF VARIATION	SS	df	MS	F	P
Total	4278,98	83			
Between Subjects	2471,66	27			
A (Hormone)	217,29	1	217,29	2,47	
B (Lesion)	36,41	1	36,41	0,41	
AB	107,67	1	107,67	1,22	
Error	2110,29	24	87,93		
Within Subjects	1807,32	56			
C (Periods)	1210,92	2	605,46	55,96	<0.001
CA	11,89	2	5,94	0,55	
CB	36,31	2	18,15	1,68	
CAB	28,74	2	14,37	1,33	
Error	519,47	48	10,82		

TABLE 2

SOURCE TABLE FOR THE ANALYSIS OF VARIANCE ON REARING DURING ADAPTATION

SOURCE OF VARIATION	SS	df	MS	F	P
Total	2877,00	83			
Between Subjects	910,65	27			
A (Hormone)	0,92	1	0,92	0,02	
B (Lesion)	1,01	1	1,01	0,03	
AB	7,56	1	7,56	0,20	
Error	901,16	24	37,55		
Within Subjects	1966,38	56			
C (Periods)	1146,99	2	573,49	47,87	$<0,001$
CA	84,69	2	42,34	3,53	$<0,05$
CB	72,69	2	36,34	3,03	
CAB	87,04	2	43,52	3,63	$<0,05$
Error	574,91	48	11,98		

TABLE 3

SOURCE TABLE FOR THE ANALYSIS OF VARIANCE ON GENERAL EXPLORATORY ACTIVITY DURING SESSIONS 2 AND 3

SOURCE OF VARIATION	SS	df	MS	F	P
Total	4779,81	167			
Between Subjects	2186,93	27			
A (Hormone)	144,30	1	144,30	1,71	
B (Lesion)	0,12	1	0,12	0,00	
AB	11,68	1	11,68	0,14	
Error	2030,83	24	84,62		
Within Subjects	2592,88	140			
C (Periods)	659,45	2	329,72	24,07	<0,001
CA	23,73	2	11,86	0,87	
CB	15,11	2	7,55	0,55	
CAB	8,25	2	4,13	0,30	
Error	657,77	48	13,70		
D (Days)	228,43	1	228,43	15,40	<0,001
DA	14,23	1	14,23	0,96	
DB	3,40	1	3,40	0,23	
DAB	53,83	1	53,83	3,63	
Error	355,95	24	14,83		
CD	42,91	2	21,46	2,13	
CDA	38,97	2	19,49	1,93	
CDB	4,35	2	2,18	0,22	
CDAB	2,05	2	1,03	0,10	
Error	484,45	48	10,09		

TABLE 4

SOURCE TABLE FOR THE ANALYSIS OF VARIANCE ON REARING DURING SESSIONS 2 AND 3

SOURCE OF VARIATION	SS	df	MS	F	P
Total	3392,14	167			
Between Subjects	1088,78	27			
A (Hormone)	36,68	1	36,63	0,94	
B (Lesion)	112,21	1	112,21	2,87	
AB	0,001	1	0,001	0,00	
Error	939,89	24	39,16		
Within Subjects	2303,36	140			
C (Periods)	863,08	2	431,54	56,19	<0,001
CA	11,30	2	5,65	0,74	
CB	4,97	2	2,48	0,32	
CAB	2,50	2	1,25	0,16	
Error	368,42	48	7,68		
D (Days)	96,46	1	96,46	6,61	<0,025
DA	14,58	1	14,58	0,99	
DB	1,29	1	1,29	0,09	
DAB	60,12	1	60,12	4,12	
Error	350,46	24	14,60		
CD	20,45	2	10,22	1,13	
CDA	13,12	2	6,56	0,73	
CDB	14,89	2	7,44	0,82	
CDAB	47,78	2	23,89	2,64	
Error	433,94	48	9,04		

TABLE 5

SOURCE TABLE FOR THE ANALYSIS OF VARIANCE ON EXPLORATORY TIME

SOURCE OF VARIATION	SS	df	MS	F	P
Total	17134,75	167			
Between Subjects	5235,95	27			
A (Hormone)	194,55	1	194,55	1,07	
B (Lesion)	294,39	1	294,39	1,61	
AB	368,43	1	368,43	2,02	
Error	4378,58	24	182,44		
Within Subjects	11898,80	140			
C (Periods)	258,23	2	129,11	2,09	
CA	213,47	2	106,74	1,73	
CB	235,39	2	117,69	1,91	
CAB	61,90	2	30,95	0,50	
Error	2963,82	48	61,75		
D (Days)	249,05	1	249,05	4,82	<0,05
DA	42,96	1	42,96	0,83	
DB	73,94	1	73,94	1,43	
DAB	53,66	1	53,66	1,04	
Error	1240,61	24	51,69		
CD	743,91	2	371,95	3,18	
CDA	52,45	2	26,23	0,22	
CDB	23,93	2	11,96	0,10	
CDAB	79,43	2	39,71	0,34	
Error	5606,05	48	116,79		

APPENDIX C

Note on the computation of the analyses of variance

Statistical analyses were carried out by means of the ANOVA program which requires an equal number of subjects in each group. The data obtained from animals which were lost before the completion of the study were rejected and equal group numbers were maintained by substituting group means for the missing data. Substitutions were made for one animal (group NC-B) in Experiment 1 and three animals (groups NC-B and NC-S) in Experiment 2.

Author Saling M M
Name of thesis The Amygdaloid Modulation of Adrenocortical Function and Habituation in Rats 1974

PUBLISHER:
University of the Witwatersrand, Johannesburg
©2013

LEGAL NOTICES:

Copyright Notice: All materials on the University of the Witwatersrand, Johannesburg Library website are protected by South African copyright law and may not be distributed, transmitted, displayed, or otherwise published in any format, without the prior written permission of the copyright owner.

Disclaimer and Terms of Use: Provided that you maintain all copyright and other notices contained therein, you may download material (one machine readable copy and one print copy per page) for your personal and/or educational non-commercial use only.

The University of the Witwatersrand, Johannesburg, is not responsible for any errors or omissions and excludes any and all liability for any errors in or omissions from the information on the Library website.