

https://dspace.org/

The design and development of a light-weight aluminium semi-trailer

Elston, Malcolm John Mac Gregor

1991

http://hdl.handle.net/10539/22707

Elston, Malcolm John Mac Gregor (1991) The design and development of a light-weight aluminium semi-trailer, University of Witwatersrand, Johannesburg, <http://wiredspace.wits.ac.za/handle/10539/22707>

Downloaded from a DSpace repository. https://dspace.org/

due to loading at the king pin, is detailed in Section C.5 in Appendix C.

The highest state of stress at the position of the upper coupler cross-member welds occurs at the rearmost cross-member, 600 mm rearward of the king pin. Figure A10 shows the chassis I-beam cross-section at this point.

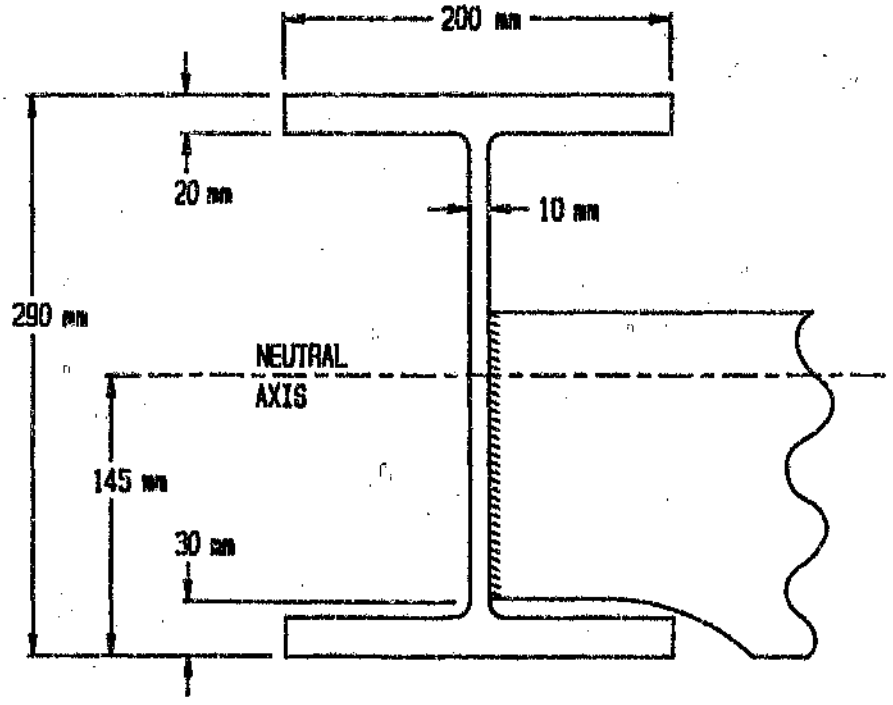

Figure A10 Chassis I-beam cross-section at the rearmost upper coupler cross-member

The point of highest stress on this cross-section will be at 115 mm below the neutral axis at the lower end of the vertical weld indicated. By linear interpolation from Table A4, the extreme fibre bending stress at the lower flange at this section is:

$\sigma_b = 36,14$ MPa

Hence, at 115 mm below the neutral axis:

$$\sigma_b = \left(\frac{115}{145}\right)(36,14)$$

$$= 28,66 \text{ MPa}$$

The longitudinal direct stress at this section, from Table A2, is:

$$\sigma_l = -7,82 \text{ MPa}$$

Summing the longitudinal direct and bending stresses at the weld end, 115 mm from the neutral axis:

$$\sigma_x = 20,84 \text{ MPa}$$

The shear force at this section is obtained from the tabulated results for Case 1 loading in Table A3, ie:

$$V = 114,86 \text{ kN}$$

and

$$\tau = \frac{VA\bar{y}}{t_2 I}$$

where

$$A = 4\,100 \text{ mm}^2$$

$$\bar{y} = 134,6 \text{ mm}$$

$$t_2 = 10 \text{ mm}$$

$$I = 1,5909 \times 10^8 \text{ mm}^4 \qquad \text{(refer Appendix B)}$$

that is

$\tau = 39,84$ MPa

The principal stresses and principal shear stress are then:

$\sigma_1 = 51,60$ MPa

$\sigma_2 = -30,76$ MPa

$\tau_p = 41,18$ MPa

Applying the Von Mises failure criterion ($\sigma_3 = 0$):

$$(\sigma_1 - \sigma_2)^2 + \sigma_1^2 + \sigma_2^2 \leq 2{\sigma_{yt}}^2$$

that is

$\sigma_m = 72,08$ MPa $< \sigma_{yt}$

Here again it is assumed that the allowable stresses for the Anticorodal -112 aluminium alloy in a heat affected zone are the same as for the alloy in the welded condition, ie. $\sigma_{yt} = 110$ MPa (refer Section E.1.1).

The principal shear stress is also well below the allowable shear yield stress in the welded condition of 65 MPa (refer Section E.1.1).

A.4 Buckling of main chassis I-beams

A beam such as an I-beam may fail by either of two modes of buckling, ie. lateral or local buckling. Lateral buckling of the chassis I-beams of the trailer is extremely unlikely since the beams are restrained laterally by the deck and torsion tubes. Local buckling of the I-beam web or flanges may occur, however, if local compressive stresses become excessive.

In this section the local buckling strength at each of the 31 nodes along the length of the I-beams is calculated, and is then compared to the stress levels evaluated in Section A.3.1. It should be noted, however, that local buckling is not necessarily indicative of imminent collapse and the beams will be capable of carrying loads above the load that will cause local instability. This is particularly true for beams in bending where web buckling precedes flange buckling.

A.4.1 Construction of the buckling diagram

The buckling diagram for the Anticorodal -112 alloy is given by the straight line:[9]

$$\sigma_c = B - 2D$$

drawn to meet the Euler curve

$$\sigma_c = \left(\frac{10^5}{\lambda^2}\right) \qquad \text{[ksi]}$$

$$= \left(\frac{6,895 \times 10^5}{\lambda^2}\right) \qquad \text{[MPa]}$$

and the horizontal line

$$\sigma_c = \sigma_{yc}$$

where

σ_c = buckling strength

σ_{yc} = compressive yield s[illegible]

λ = slenderness ratio

B, D = Constants [ksi]

For a fully heat treated aluminium alloy:

$$B = \sigma_{yc} + (0,67)\left(\frac{\sigma_{yc}}{10}\right)^{\frac{2}{3}}$$

$$D = \left(\frac{B}{100}\right)^{\frac{2}{3}}$$

where σ_{yc} is in ksi.

For the Anticorodal–112 alloy (refer Section E.1.1):

$$\sigma_{yc} = 260 \text{ MPa}$$
$$= 37,71 \text{ ksi}$$

Whence:

$$B = 42,62 \text{ ksi}$$
$$= 293,8 \text{ MPa}$$
$$D = 0,2782 \text{ ksi}$$
$$= 1,918\text{MPa}$$

The buckling diagram for the Anticorodal–112 alloy, constructed from the above parameters, is shown in Graph A1.

A.4.2 Buckling strength distribution

Referring to Figure A11, the ratio of the width of unsupported flange to the web height is less than unity over the full length of the chassis I-beams, ie:

$$\frac{a}{b} < 1$$

Graph A1 Buckling diagram for Anticorodal - 112 aluminium alloy

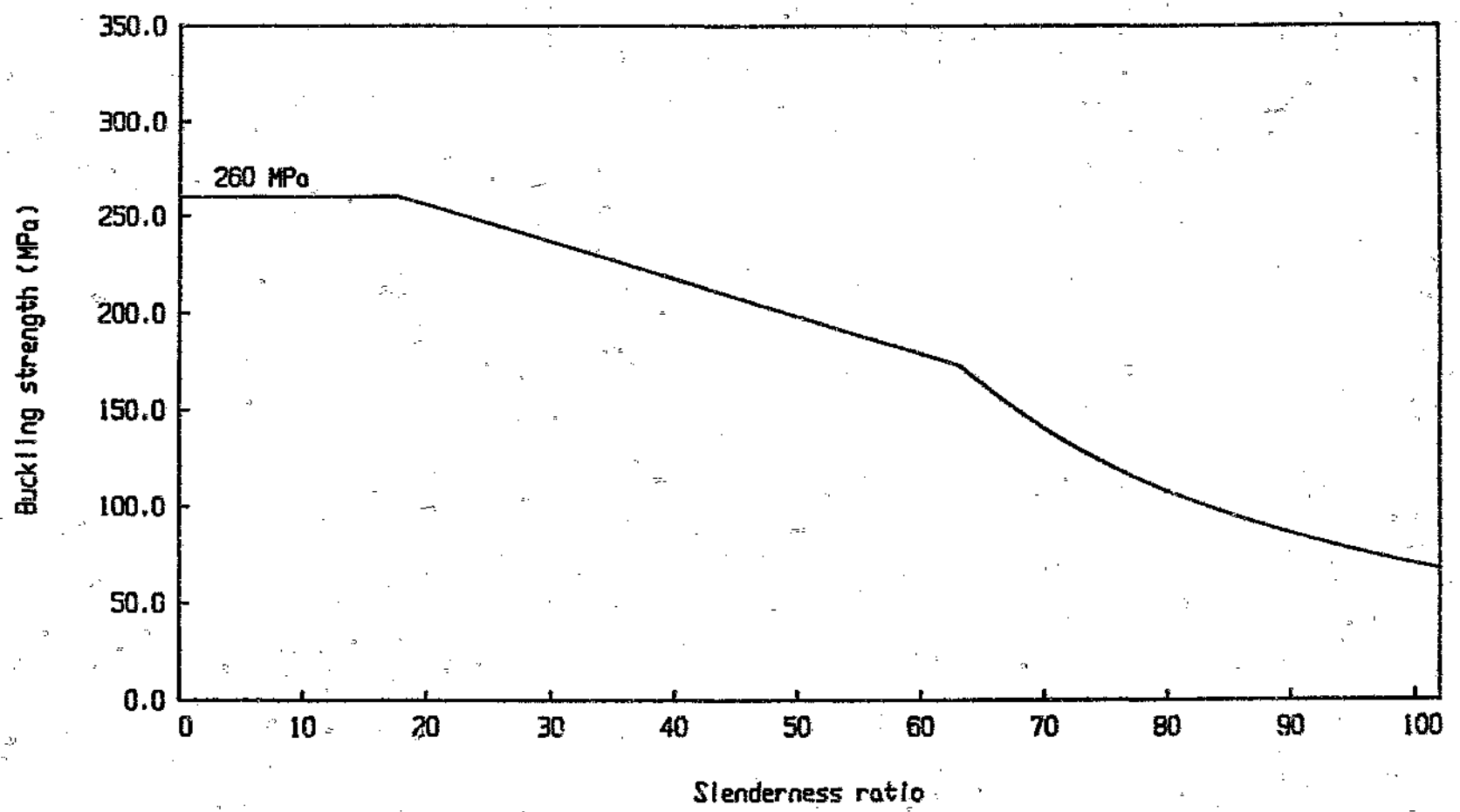

Hence, web buckling will always precede flange buckling.[9]

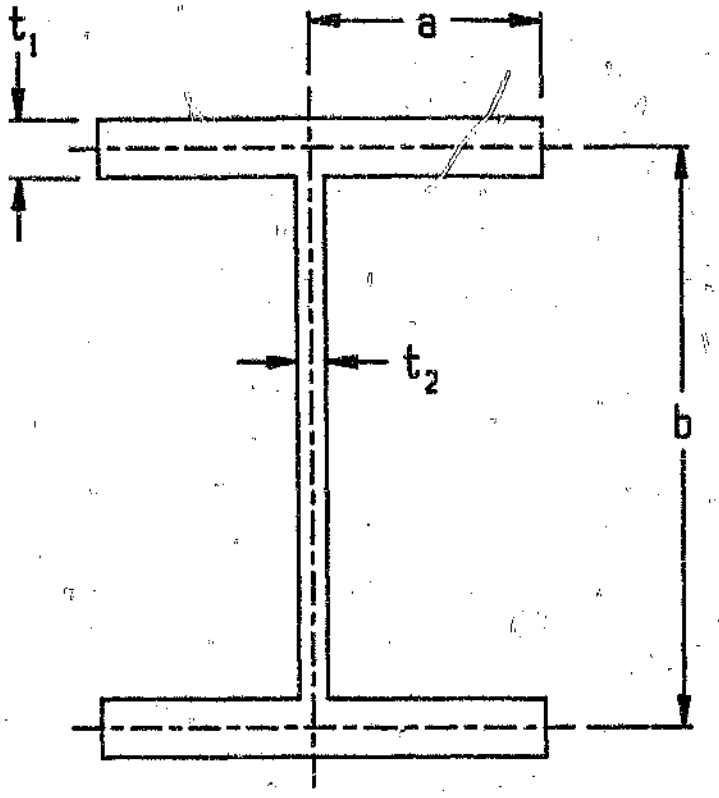

Figure A11 Unsupported flange and web heights

With reference to Figures A11 and A12, the ratio of flange to web thickness is constant for each node along the length of the beams, ie:

$$\frac{t_1}{t_2} = \frac{20}{10} = 2,0$$

Further, the slenderness ratio is given by the relationship:

$$\lambda = m\frac{b}{t_2}$$

where m is derived from the left hand side of Figure A12 for the particular

value of (a/b) at each of the 31 nodes along the length of the chassis I-beams.

The web buckling strength at each node is then obtained from Graph A1 for each value of λ. The distribution over the length of the beams is presented here in Table A8 and plotted over the span from node 3 to node 16 in Graph 4.35 in Chapter 4.

Comparing the web buckling strength at each of the nodes to the actual state of stress at the top of the web, as calculated in Section A.3.1 (refer Table A6), it is seen that the actual stress at all of the 31 nodes is significantly lower than the corresponding buckling strength.

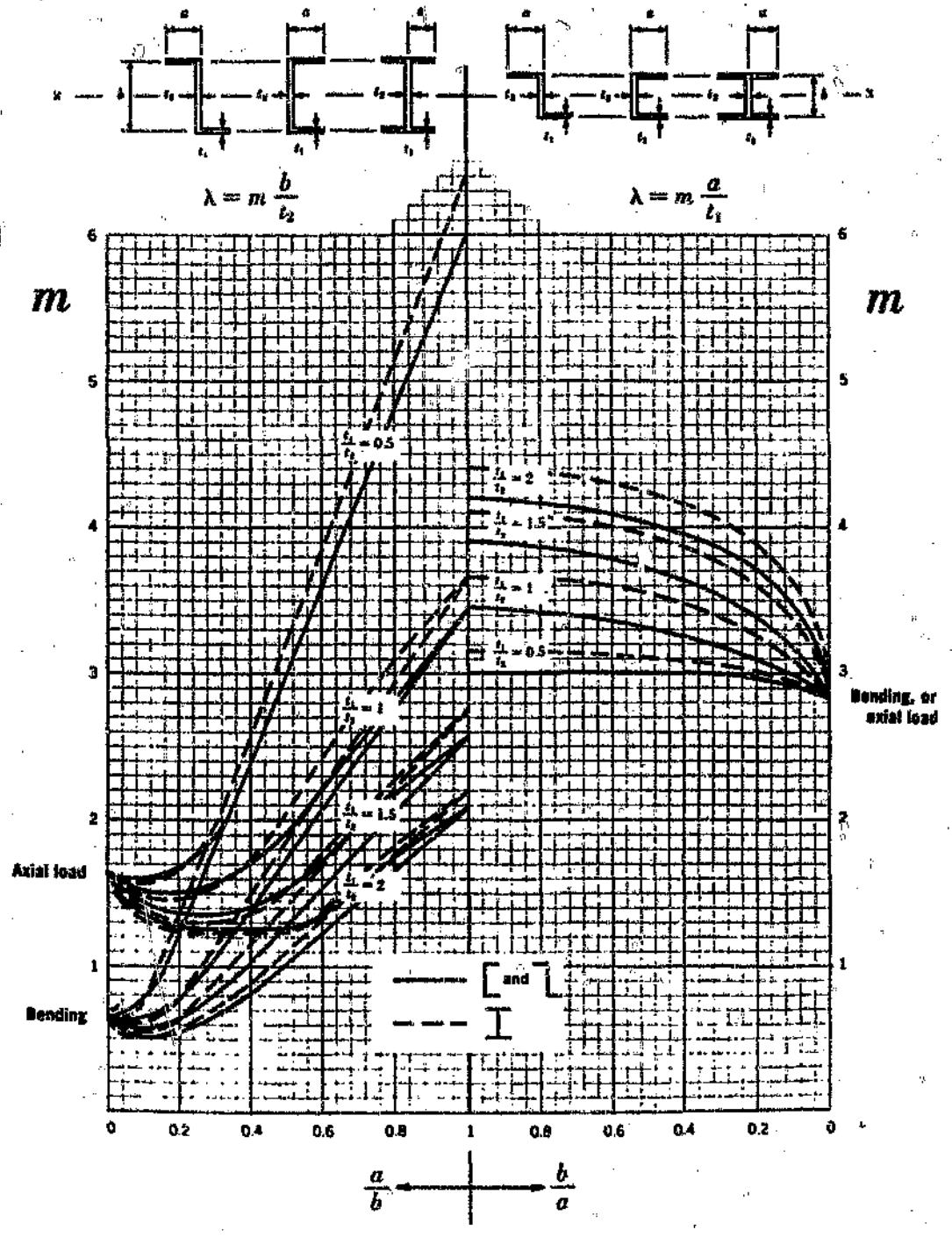

Figure A12 Values of m to give slenderness ratios for local buckling of shapes[9]

Table A8 Web buckling strength distribution

Node	Slenderness ratio	Web buckling strength (MPa)
1	22,28	251,07
2	22,28	251,07
3	22,28	251,07
4	22,28	251,07
5	22,28	251,07
6	22,56	250,53
7	23,13	249,43
8	23,27	249,17
9	24,28	247,22
10	25,52	244,85
11	28,60	238,94
12	30,72	234,88
13	30,74	234,84
14	30,74	234,84
15	30,74	234,84
16	30,74	234,84
17	30,74	234,84
18	30,74	234,84
19	30,74	234,84
20	30,74	234,84
21	30,74	234,84
22	30,74	234,84
23	30,74	234,84
24	30,74	234,84
25	30,74	234,84
26	30,74	234,84
27	30,74	234,84
28	30,74	234,84
29	30,74	234,84
30	30,74	234,84
31	30,74	234,84

A.5 Fatigue analysis of main chassis I-beams

As discussed in Section 4.3.5 in chapter 4, the fatigue life of the main chassis I-beams is evaluated at the following three points:

- At the extreme fibres of the tension flange at maximum bending stress (ie. at node 9).
- At the main beam welds below the neutral axis at maximum bending stress (ie. at node 9).
- At the lower torsion tube bolt hole at 2 109 mm from the king-pin.

These three points were chosen since they are the three most failure-critical areas along the length of the beams (refer Section A.3.2) and since they demonstrate the application of the methodology of fatigue analysis for as wrought material and for welded and bolted joints. In all three cases the stresses are evaluated below the neutral axis since the tensile mean stresses below the neutral axis result in a greater susceptibility to fatigue crack growth than compressive mean stresses.[30,44–46]

A.5.1 Fatigue stress levels

The fatigue stresses at the three critical points are calculated for vertical dynamic accelerations in the range from 1-g (static loading) up to a maximum of 2-g in steps of 0,1-g. Values of shear force and bending moment are derived from the static loading analysis (Case 2) in Appendix B, by multiplying the static loading values by the vertical g-level factor. No longitudinal dynamic loads are included. In all three cases, the maximum stress is equal to the maximum principal stress at the point for the particular g-level factor, and the mean stress is taken to be the maximum principal stress resulting from static loading. The alternating stress, minimum stress and stress ratio are

obtained as shown in Figure A13, below.

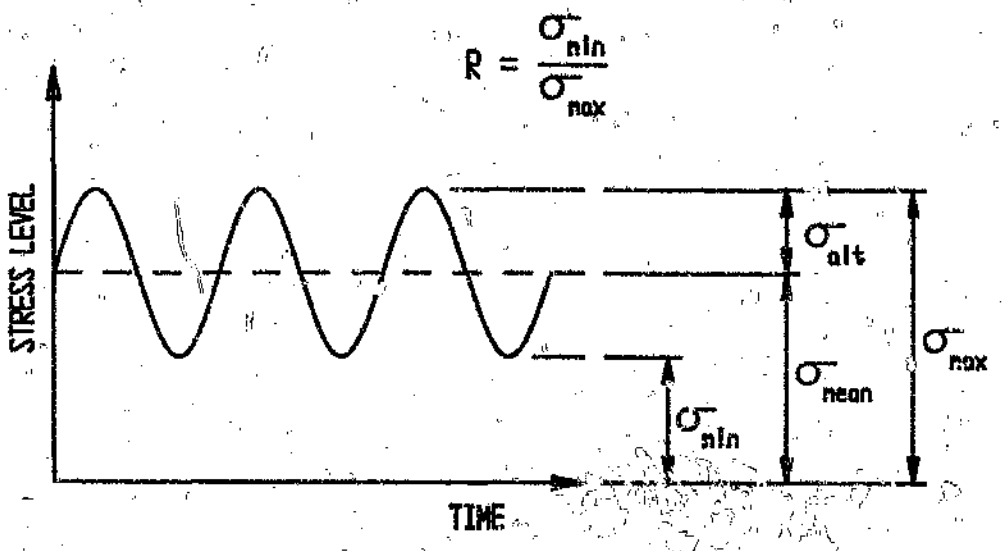

Figure A13 Fatigue stress parameters

Note that no stress concentration factor is included in the calculation of stress levels at the bolt hole at 2109 mm from the king-pin, since such effects are included in the 'Alcan'[9] and 'BS CP 118: 1969'[46] fatigue curves (refer Figure A15 and Figure A17) for class 3 members.

Tables A9 to A11 present values of maximum stress, stress ratio, mean stress and alternating stress at each of the three positions for the range of g-levels selected.

Table A9 Fatigue stresses at extreme fibres of tension flange at node 9

Vertical g-level	Max. stress (MPa)	Stress ratio	Mean stress (MPa)	Alt. stress (MPa)
1,1	45,99	0,818	41,81	4,18
1,2	50,17	0,667	41,81	8,36
1,3	54,35	0,538	41,81	12,54
1,4	58,53	0,429	41,81	16,72
1,5	62,71	0,333	41,81	20,90
1,6	65,89	0,250	41,81	25,08
1,7	71,07	0,176	41,81	29,26
1,8	75,25	0,111	41,81	33,45
1,9	79,43	0,053	41,81	37,63
2,0	83,61	0,000	41,81	41,81

Table A10 Fatigue stresses at lower beam welds at node 9

Vertical g-level	Max. stress (MPa)	Stress ratio	Mean stress (MPa)	Alt. stress (MPa)
1,1	30,20	0,818	27,45	2,75
1,2	32,94	0,667	27,45	5,49
1,3	35,69	0,538	27,45	8,24
1,4	38,43	0,429	27,45	10,98
1,5	41,18	0,333	27,45	13,73
1,6	43,92	0,250	27,45	16,47
1,7	46,67	0,176	27,45	19,22
1,8	49,41	0,111	27,45	21,96
1,9	52,16	0,053	27,45	24,71
2,0	54,90	0,000	27,45	27,45

Table A11 Fatigue stresses at lower torsion tube bolt hole at 2109 mm from king-pin

Vertical g-level	Max. stress (MPa)	Stress ratio	Mean stress (MPa)	Alt. stress (MPa)
1,1	17,73	0,818	16,12	1,61
1,2	19,34	0,667	16,12	3,22
1,3	20,96	0,538	16,12	4,84
1,4	22,57	0,429	16,12	6,45
1,5	24,18	0,333	16,12	8,06
1,6	26,79	0,250	16,12	9,67
1,7	27,40	0,176	16,12	11,28
1,8	29,02	0,111	16,12	12,90
1,9	30,63	0,053	16,12	14,51
2,0	32,24	0,000	16,12	16,12

A.5.2 Frequency distribution of fatigue stress spectrum

A Gaussian or Normal frequency distribution, as defined by the distribution function below,[47] is used here to approximate the frequency distribution of the actual fatigue stress history over the projected service life of the vehicle.

$$F(x) = \frac{1}{s\sqrt{2\pi}} \int_{-\infty}^{x} e^{-\frac{1}{2}[(v-\mu)/s]} dv$$

The following two assumptions are used in applying the frequency distribution to the fatigue stress levels:

- The 2-g stress level corresponds to six standard deviations from the mean stress.
- The trailer experiences one stress cycle for every metre travelled.

The value of six standard deviations results in a frequency of 2-g stress cycles of one in every 15 679 km. The assumption of one stress cycle per metre results in frequencies of vibration of 17 Hz at 60 km/h and 28 Hz at 100 km/h.

Table A12 and Graph A2 present results for this assumed normal distribution in terms of the percentage of total cycles at each vertical g-level.

Table A12 Normal distribution of fatigue stress cycles

Vertical g-level	Percentage of total cycles
1,1	45,26
1,2	31,82
1,3	15,78
1,4	5,512
1,5	1,357
1,6	0,2353
1,7	$2{,}872 \times 10^{-2}$
1,8	$2{,}466 \times 10^{-3}$
1,9	$1{,}489 \times 10^{-4}$
2,0	$6{,}378 \times 10^{-6}$

Graph A2 Normal distribution of fatigue stress cycles

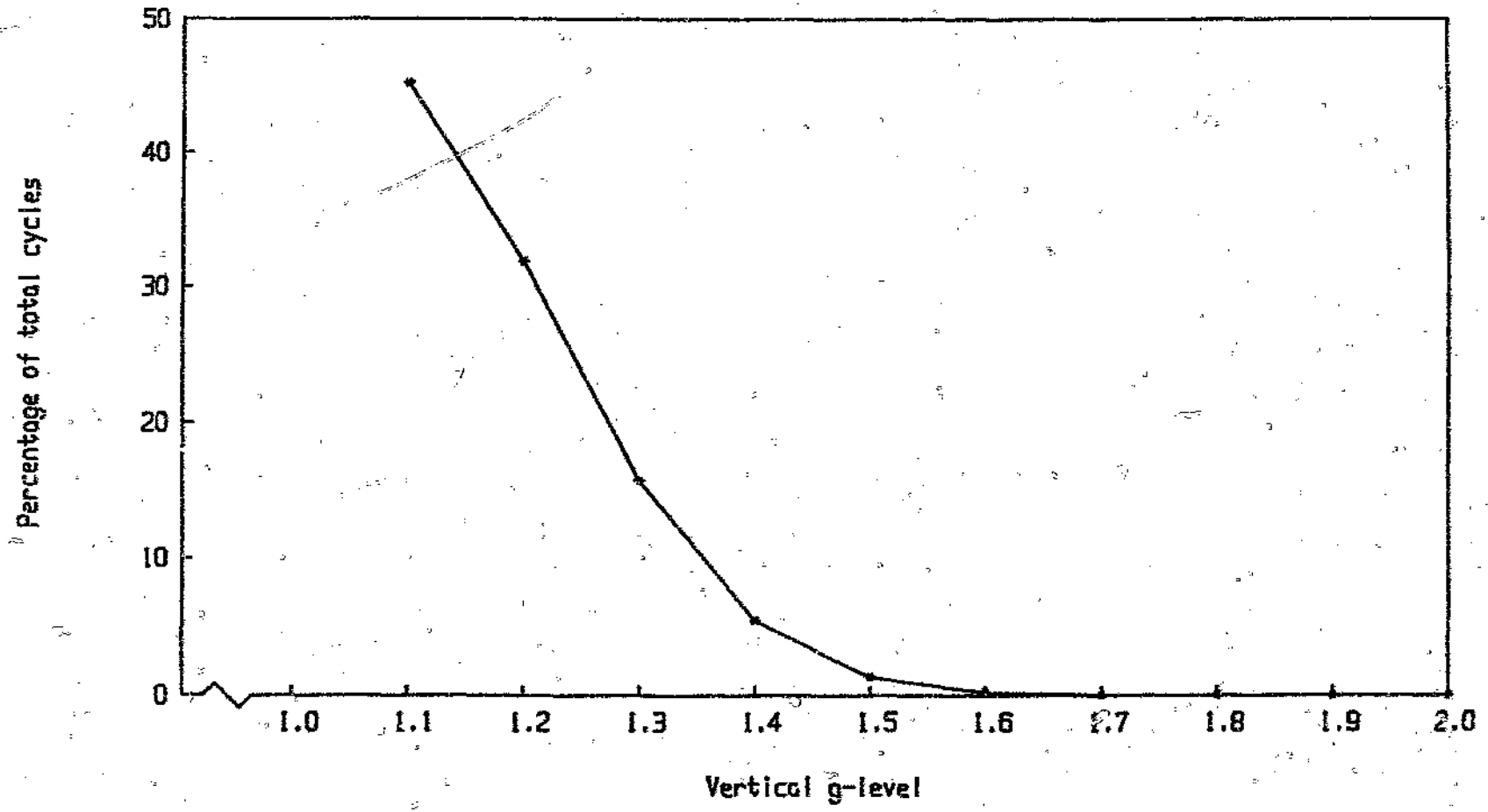

A.5.3 Cumulative fatigue damage

The number of cycles to failure at each stress level (ie. constant amplitude stress cycles) is calculated from the fatigue stresses and distribution spectrum of Sections A.5.1 and A.5.2 respectively, by using available stress-life fatigue data. The cumulative fatigue damage resulting from each stress level is then summed to give an estimation of the fatigue life of the chassis beams, at each of the three critical points, by applying the Palmgren-Miner Linear Damage Rule or Miner's Law (refer Section 3.4).

Two sources of fatigue data for the medium strength aluminium alloys were used; namely 'Alcan' data (Alcan Canada Products Ltd)[9] and BS CP 118: 1969.[46] The Alcan fatigue curves (Figure A15) relate the number of cycles to failure (at constant stress amplitude) for various classes of members, to the mean and alternating stresses. BS CP 118, on the other hand, presents separate fatigue curves (Figures A16 to A18) for each class of member in terms of the number of cycles, the maximum stress and the stress ratio. Figure A14 shows the various classes of structural member. The description of the three classes of member[9,46] used in this analysis, ie. classes 1, 3 and 4, are as follows:

Class 1 – As rolled or extruded surfaces with no other stress raisers.

Class 3 – Members fabricated or connected by close fitting bolts or by cold driven aluminium rivets, and designed so that secondary bending stresses are not introduced; and full penetration butt-welds made from both sides and with light bead reinforcement.

Class 4 – Members with continuous longitudinal fillet welds made without interruptions during welding, and butt-welds with near maximum bead reinforcement made from both sides.

Tables A13 to A15 present results for both sets of fatigue curves at each of the three critical points. Numbers of cycles to failure greater than 5×10^8 cycles are taken to be infinite.

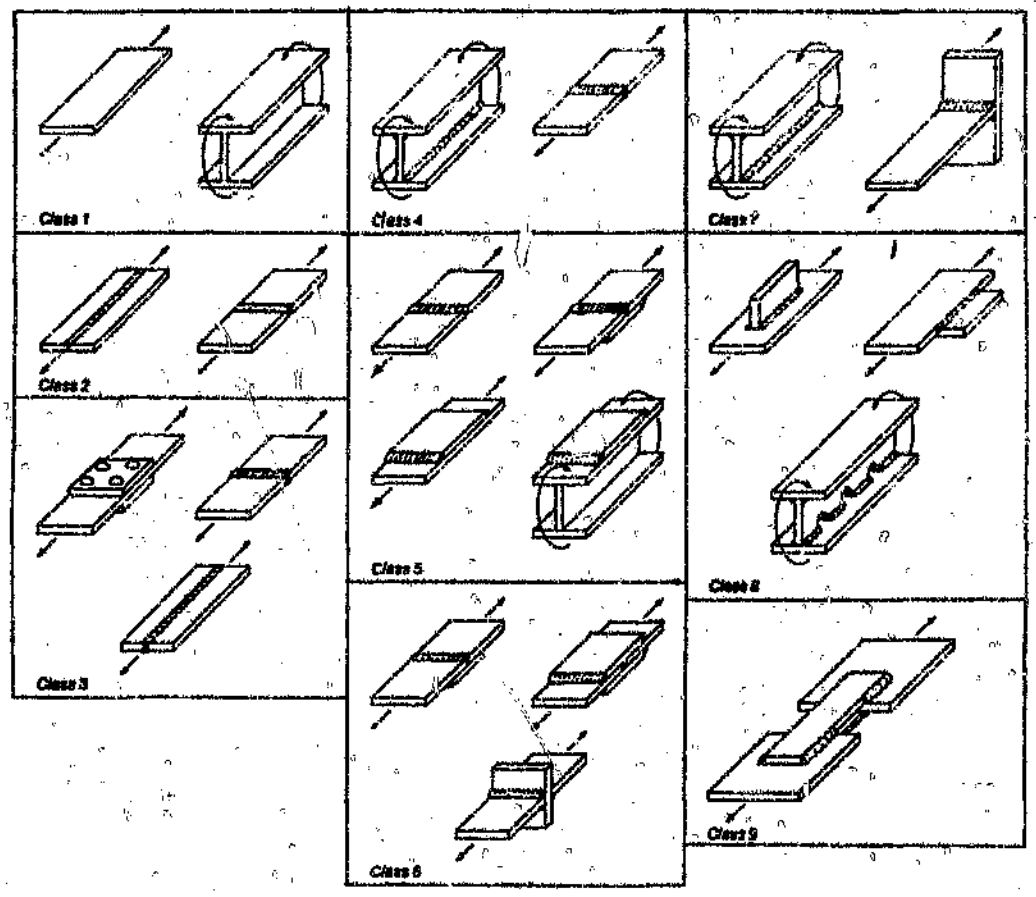

Figure A14 Classification of structural members[9]

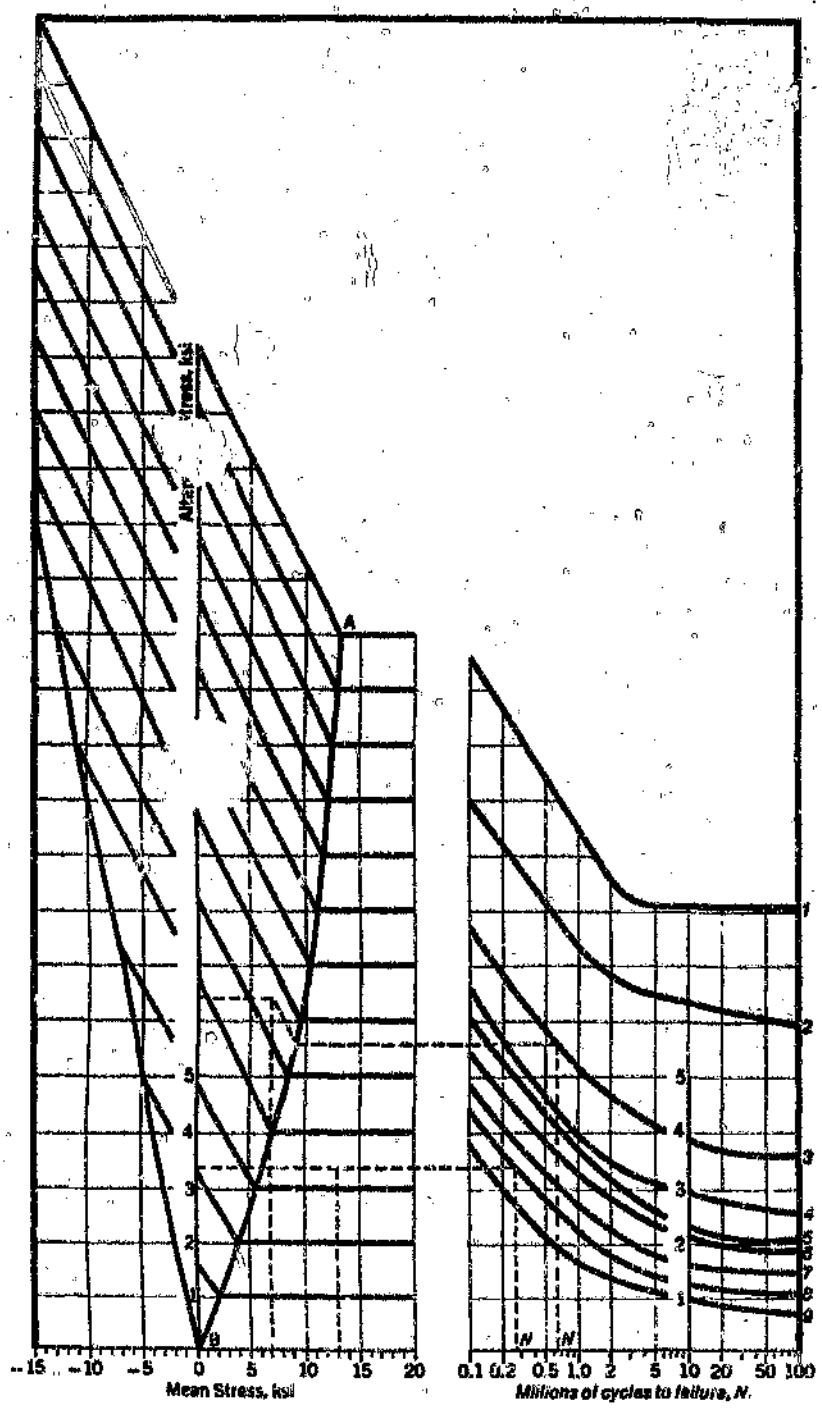

Figure A15 Fatigue curves relating cycles to failure to mean and alternating stresses[9]

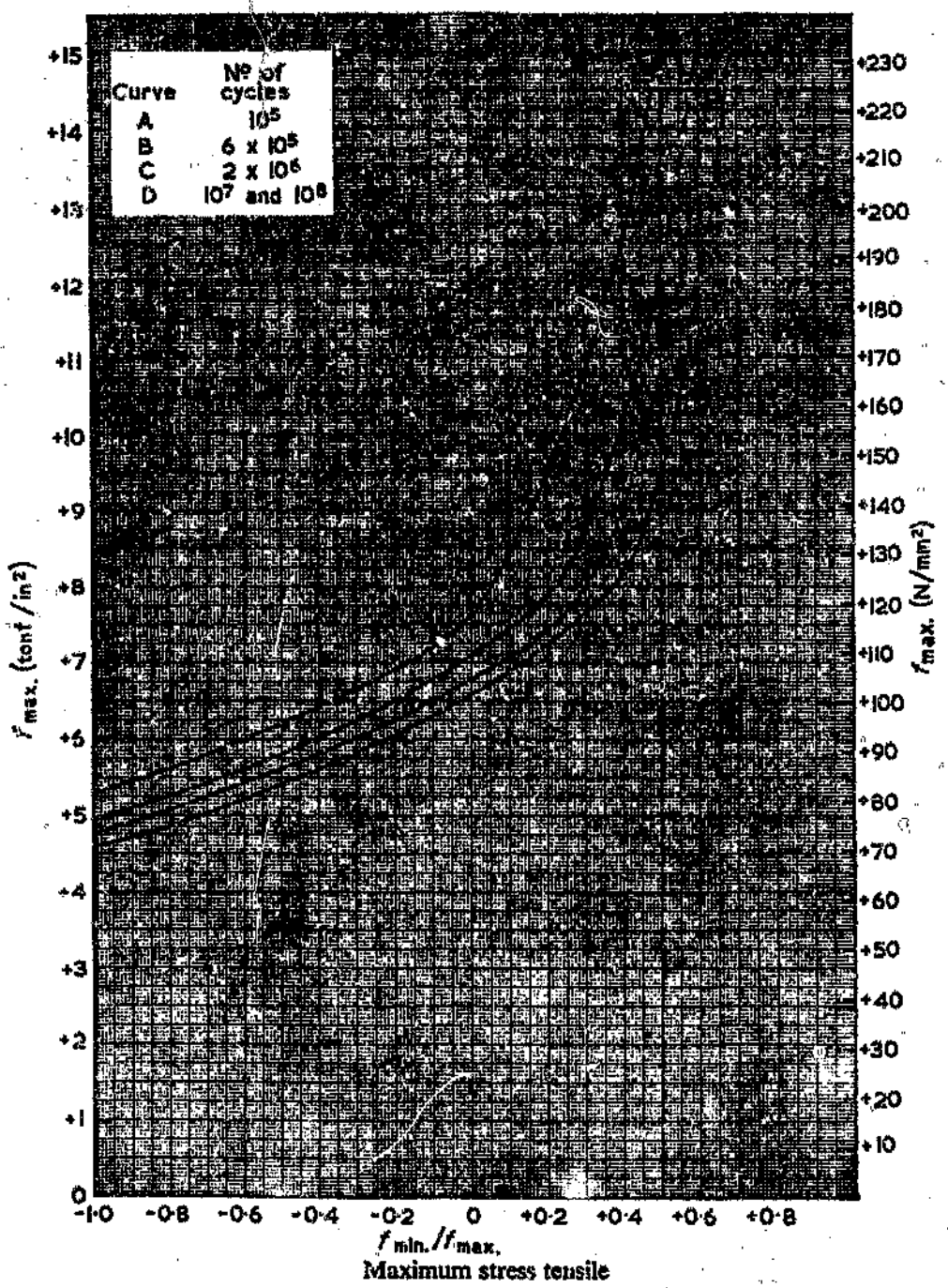

Figure A16 Curves relating maximum stress, stress ratio and number of cycles for class 1 members[46]

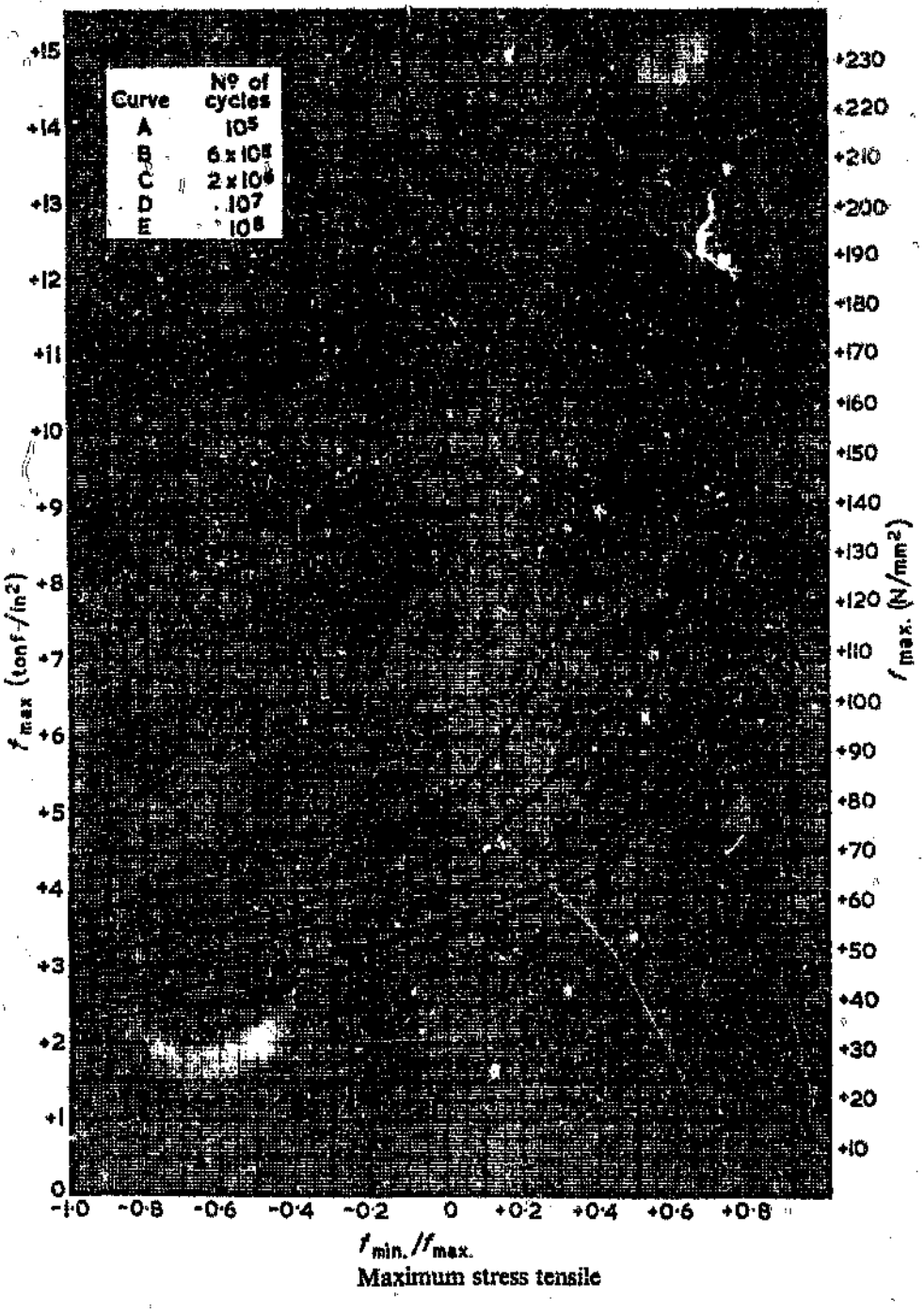

Figure A17 Curves relating maximum stress, stress ratio and number of cycles for class 3 members[46]

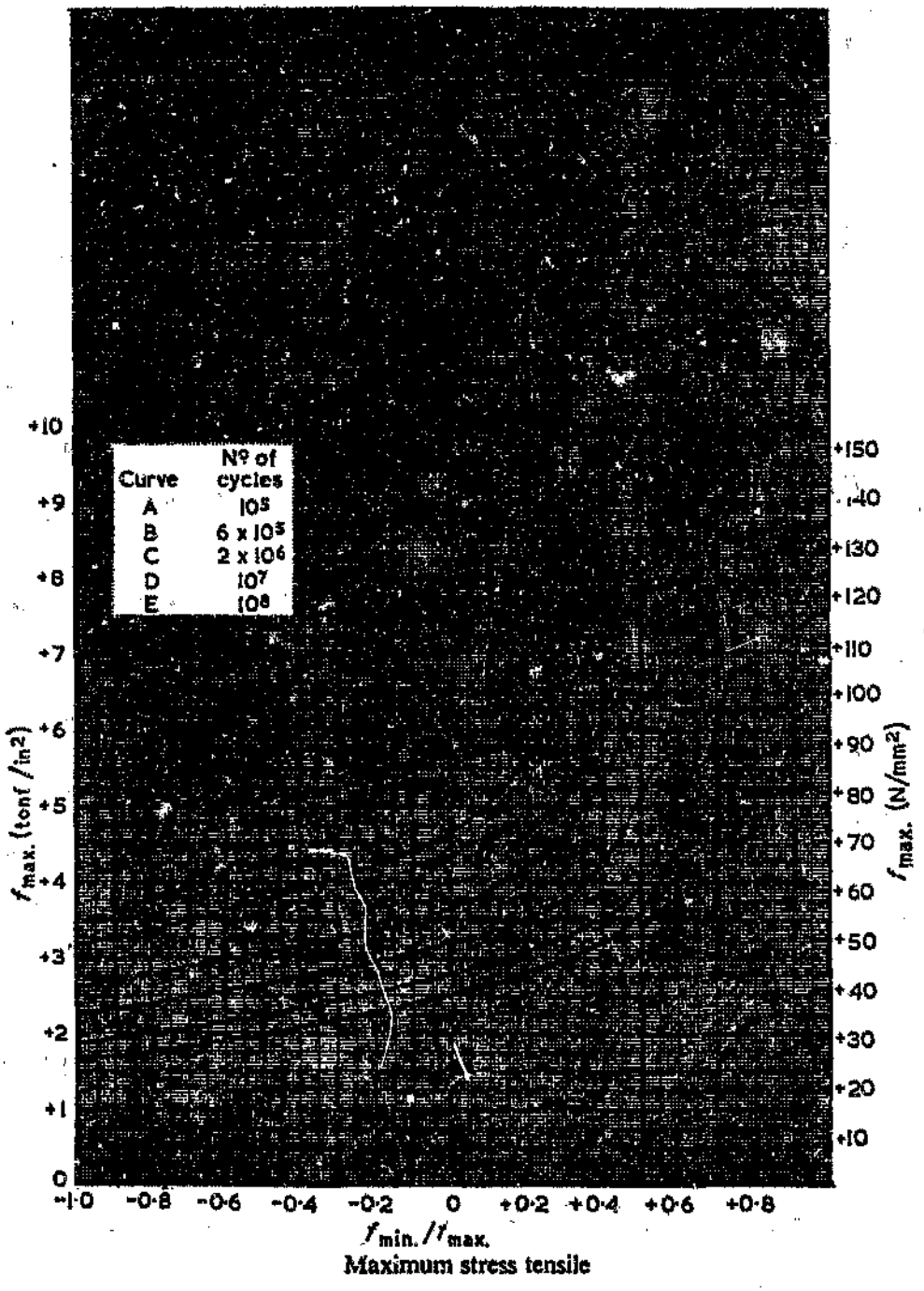

Figure A18 Curves relating maximum stress, stress ratio and number of cycles for class 4 members[46]

Table A13 Constant amplitude cycles to failure at extreme fibres of tension flange at node 9

Vertical g-level	Cycles to failure for Alcan data	Cycles to failure for BS CP 118 data
1,1	∞	∞
1,2	∞	∞
1,3	∞	∞
1,4	∞	∞
1,5	∞	∞
1,6	∞	∞
1,7	∞	∞
1,8	∞	∞
1,9	∞	∞
2,0	∞	∞

Table A14 Constant amplitude cycles to failure at main beam welds at node 9

Vertical g-level	Cycles to failure for Alcan data	Cycles to failure for BS CP 118 data
1,1	∞	∞
1,2	∞	∞
1,3	∞	∞
1,4	∞	∞
1,5	∞	∞
1,6	∞	∞
1,7	*5×10^8	2×10^7
1,8	*2×10^8	$3,5 \times 10^6$
1,9	2×10^7	$2,6 \times 10^6$
2.0	$5,8 \times 10^6$	$7,8 \times 10^5$

*By extrapolation

Table A15 Constant amplitude cycles to failure at bolt hole 2109 mm from king-pin

Vertical g-level	Cycles to failure for Alcan data	Cycles to failure for BS CP 118 data
1,1	∞	∞
1,2	∞	∞
1,3	∞	∞
1,4	∞	∞
1,5	∞	∞
1,6	∞	∞
1,7	∞	∞
1,8	∞	∞
1,9	∞	∞
2,0	∞	∞

Applying Miner's Law to each of Tables A13 to A15 (refer Section 3.4):

$$\sum\left(\frac{n_i}{N_i}\right) = 1 \qquad \text{for failure}$$

At the extreme fibres at node 9 and at the bolt hole, the total number of cycles to failure is infinite since the damage ratio is always zero. The number of cycles to failure at the main beam welds at node 9, for the two sets of fatigue data, are given by (refer Table A12 and Table A14):

Alcan data:

$$\left[\left(\frac{2,872 \times 10^{-4}}{80 \times 10^{6}}\right) + \left(\frac{2,466 \times 10^{-5}}{17 \times 10^{6}}\right) + \left(\frac{1,489 \times 10^{-6}}{5,5 \times 10^{6}}\right)\right.$$
$$\left. + \left(\frac{6,378 \times 10^{-8}}{2,6 \times 10^{6}}\right) N_f = 1\right.$$

that is

$$N_f = 1,37 \times 10^{11} \text{ cycles}$$

BS CP 118 data:

$$\left[\left(\frac{2,872 \times 10^{-4}}{2,4 \times 10^{7}}\right) + \left(\frac{2,466 \times 10^{-5}}{3,1 \times 10^{6}}\right) + \left(\frac{1,489 \times 10^{-6}}{1,6 \times 10^{6}}\right)\right.$$
$$\left. + \left(\frac{6,378 \times 10^{-8}}{9,1 \times 10^{5}}\right) N_f = 1\right.$$

that is

$$N_f = 4,78 \times 10^{10} \text{ cycles}$$

APPENDIX B

GENESYS 'FRAME-ANALYSIS/2' SUB-PROGRAM

B.1 Introduction

The 'Genesys Frame-analysis/2' structural analysis sub-program on the University of the Witwatersrand's IBM 370 Mainframe computer was used in this design for the loading analysis of the two main chassis I-beams. Shear force, bending moment and deflection results for 31 nodes along the length of a chassis I-beam are presented here for all of the support and loading cases discussed in Section A.2. in Appendix A.

B.2 General

The positions of the 31 nodes along the neutral axis of the I-beam are presented in Figure B1, with node 1 being at the origin of the Cartesian axis system and the x-axis directed along the neutral axis of the beam towards node 31. The loads in the loading data tables are for a single chassis I-beam and are presented in the form of total load between two consecutive nodes comprising the ends of a particular member. In this form the sub-program reads the load as being uniformly distributed over the length of that member. Hence, the skewed dynamic loading distribution has to be input as a stepped loading distribution with the total load for each member being calculated from the average value of distributed load for that member. However, because of the relatively large number of nodes along the length of the beam, this approximation has a negligible effect on the final results. In the data and results tables that follow, dynamic loading is denoted by 'LOADING/V2L1' and static loading by 'LOADING/1'. The load transfer within the suspension for dynamic loading conditions is accounted for by applying braking moments (refer Section A.2.2) at the positions of the axles in the computer model of the suspension (ie. at nodes 42, 45 and 48). The suspension hanger

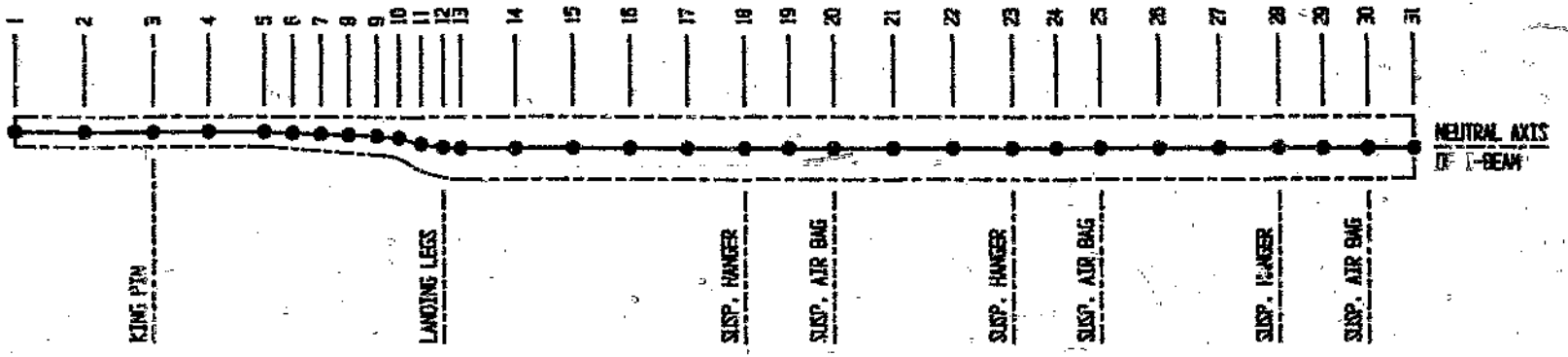

Figure B1 Main chassis I-beam nodes ('MEMBERS')

moments are applied directly at nodes 18, 23 and 28.

The load equalising characteristics of the tri-axle air-suspension are modelled by using a 'fir-tree' system of pin-jointed links, as shown in Figure B2. These links are attached to the chassis I-beam at the suspension hanger and air-bag nodes and are proportioned to correctly distribute the load between axles and between hanger and air-bag mounts. For support conditions where various axles are lifted, this system of links is modified (refer Figures B3 to B6). The cross-sectional areas and second moments of area of the suspension links are arbitrarily given high values so that the deflections of the suspension linkage system are small in comparison with the chassis beam deflections, and can thus be neglected. This can be illustrated as follows:

Referring to Figure B2, for no bending of link 50-52, the vertical deflection of node 51 will be the mean deflection of nodes 50 and 52, ie:

$$y_{51} = \left(\frac{y_{50} + y_{52}}{2}\right)$$

Thus, substituting the vertical deflections for nodes 50 and 52 from the tables of results for Case 1 loading:

$y_{51} = -20,820$ mm

However, from the tables of results:

$y_{51} = -20,772$ mm

Therefore, the component of deflection of node 51 due to bending of link 50-52 is:

$(-20,772) - (-20,820) = 0,048$ mm

which is negligible.

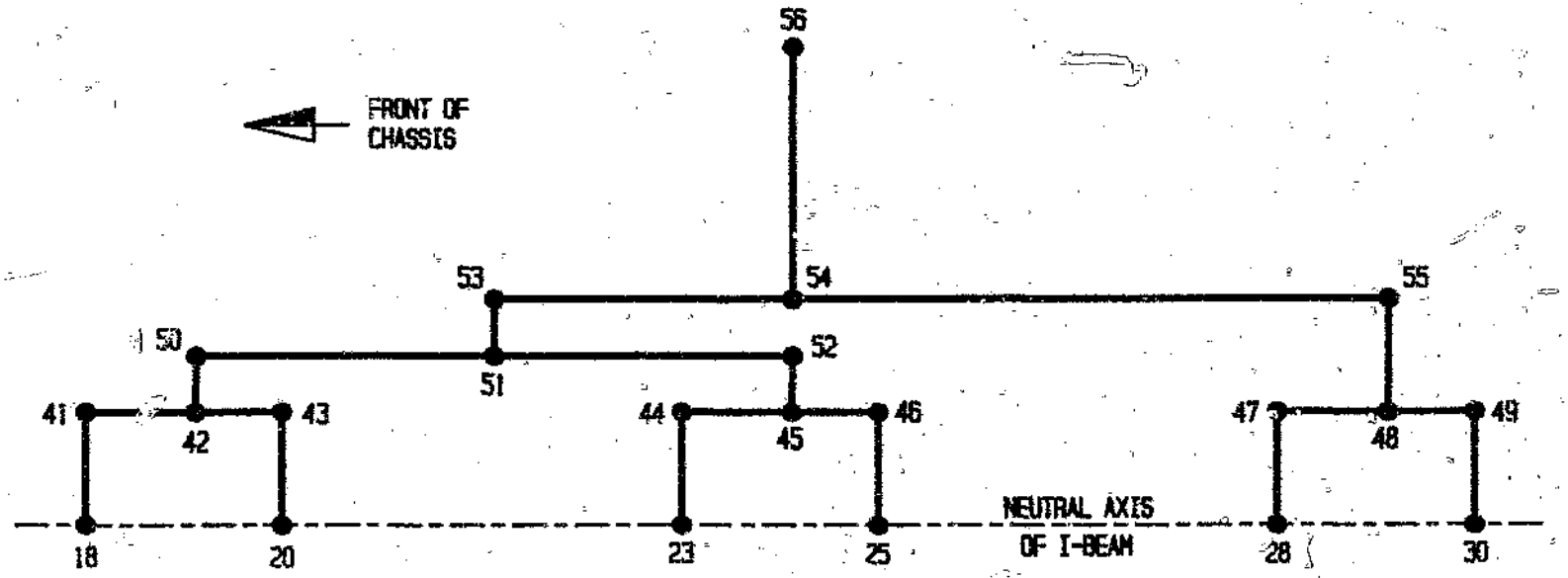

Figure B2 Three axle suspension model ('LINKS/3')

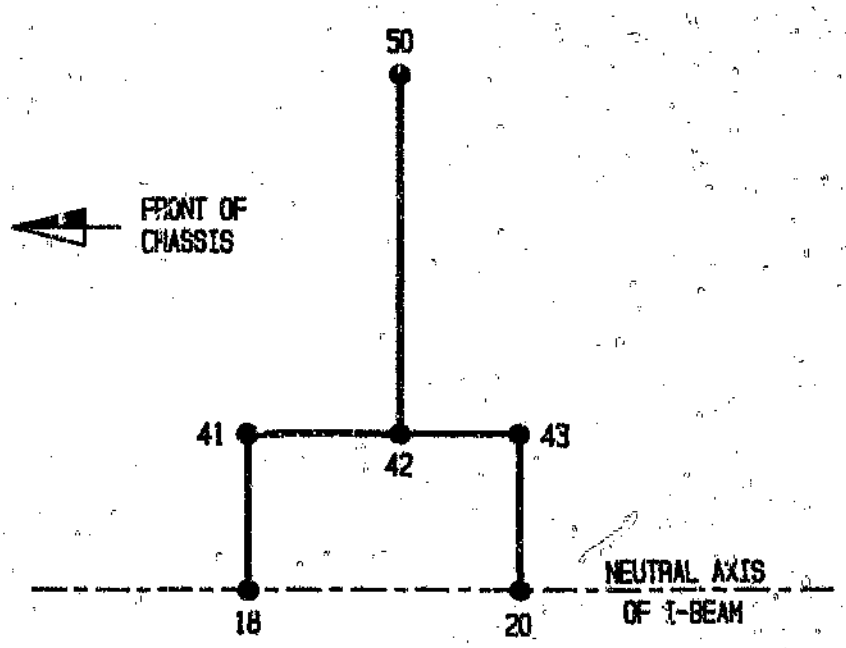

Figure B3 Suspension model for support at foremost axle ('LINKS/F')

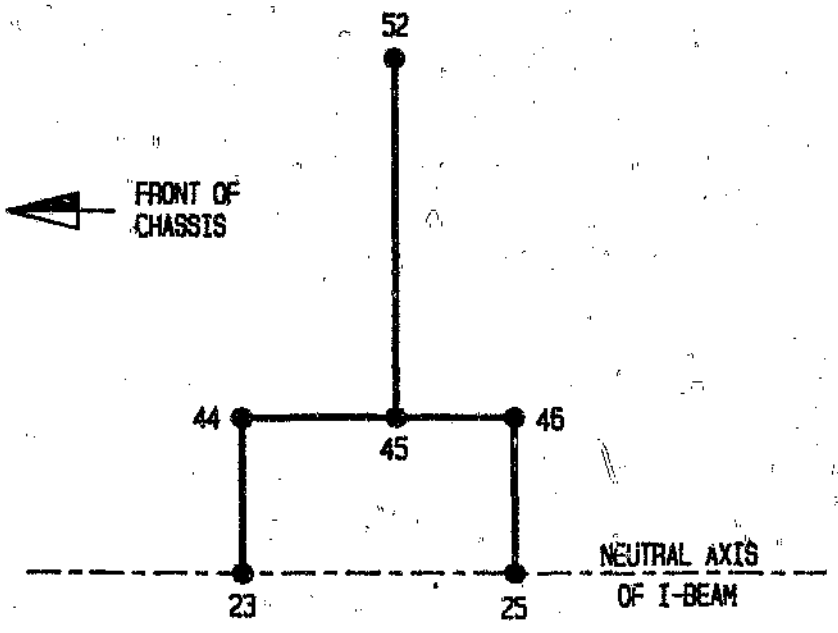

Figure B4 Suspension model for support at centre axle ('LINKS/C')

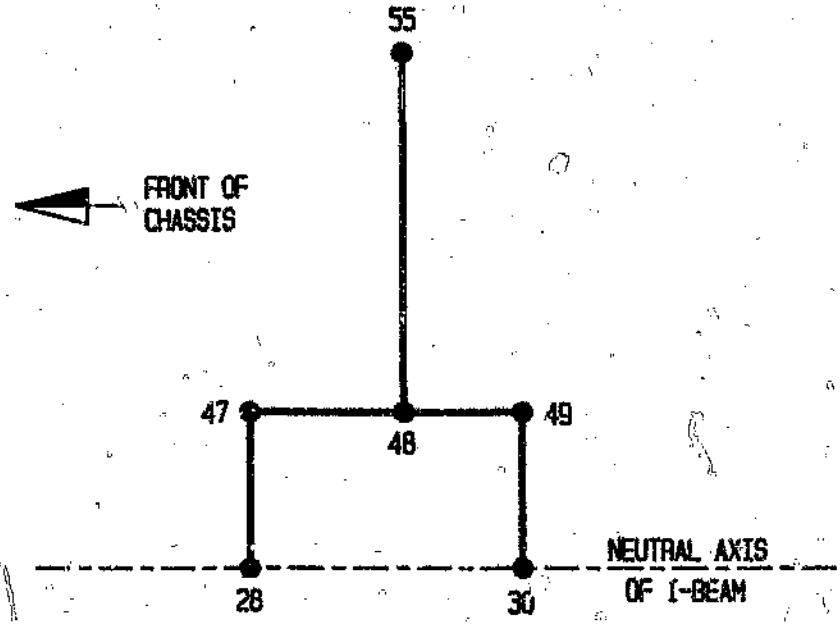

Figure B5 Suspension model for support at rearmost axle ('LINKS/R')

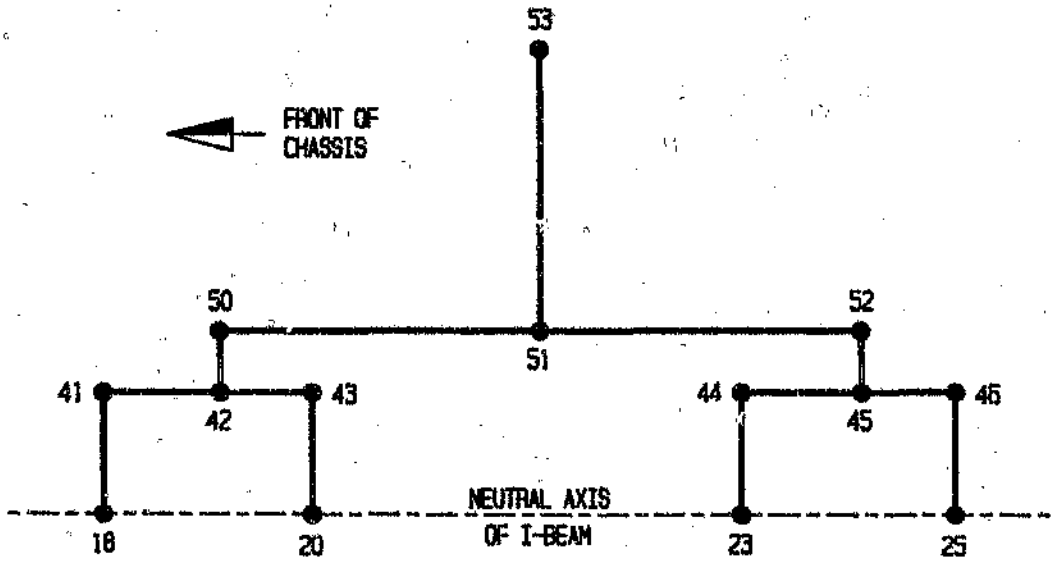

Figure B6 Suspension model for support at foremost and centre axle ('LINKS/FC')

Similarly, for the other horizontal links in Figure B2:

node 42 — 0,000 mm

node 45 — 0,001 mm

node 48 — 0,001 mm

node 54 — 0,193 mm

The compression deflection of all vertical links is zero, except for link 54-56 which compresses by 0,004 mm.

In the following analyses the cross-section of the beam is assumed to be made up of regular rectangular shapes (ie. no radii) for the purposes of calculating areas and second moments of area. Where the section of the I-beam changes over the length between two nodes, the cross-sectional area and second moment of area are calculated for the section halfway between the two nodes.

In the results that follow, the shear force values presented for nodes 5 to 13 (and especially for nodes 9 to 12) are slightly inaccurate. This is due to the inclined neutral axis of the I-beam in this region, and the fact that the sub-program calculates shear force values in the direction perpendicular to the 'members' making up the I-beam. Further, as a consequence of the difference in slope between adjacent 'members' in the gooseneck region, the shear force value calculated at a particular node for one 'member' is different to the value calculated at the same common node for the adjacent member. This is particularly apparent for nodes 10 and 11. If the shear force value calculated for the 'member' of lower slope of the two 'members' adjacent to a particular node is used in all calculations, the above errors can be shown to be less than one percent. In this way, the two data points for 'member' 10-11, where the errors are as high as three and a half percent, need not be used.

Furthermore, longitudinal loads, and hence nodal x-deflections, are seen to occur in the results that follow, and these are also due to the inclined neutral axis between nodes 5 and 13. However, their values are small in comparison to the y-direction loads and deflections, and they are thus neglected.

B.3 GENESYS 'FRAME-ANALYSIS/2' input data and results tables

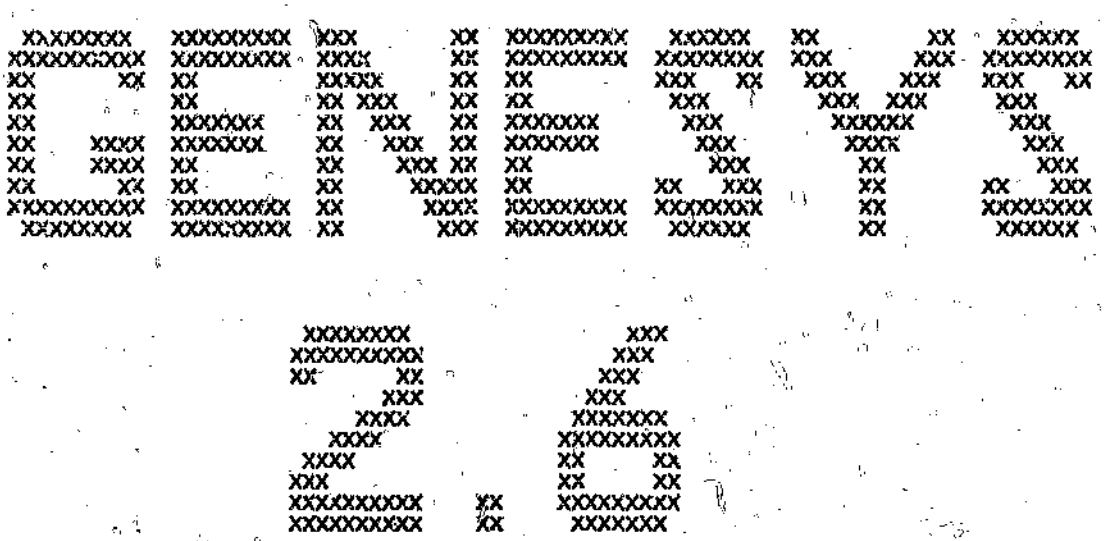

```
GENESYS 2.6
*GENESYS
*START 'FRAME-ANALYSIS/2'
JOB  TRAILER
```

DATA TABLES
****

*TABLES

'BEAM'

LINE	REF	AREA,,MM**2	INERTIA,,MM**4
0001			
0002	1	10500.0	1.5909E08
0003	2	10596.1	1.7122E08
0004	3	10788.4	1.9695E08
0005	4	10980.7	2.2468E08
0006	5	11173.0	2.5444E08
0007	6	11404.8	2.9306E08
0008	7	12340.0	4.8062E08
0009	8	13263.2	7.1870E08
0010	9	13572.2	8.1081E08
0011	10	13600.0	8.1941E08
0012	11	5.0E05	1.0E10

'PIN'

LINE	REF	QW,,KN*M/RAD	RIGID,,MM
0001			
0002	1	0,0	0.0,0.0

'MEMBERS'

LINE	MEMBER	PROJECTIONS,,MM	SECTION
0001			
0002	1,2	677.5,0.0	'BEAM',1
0003	2,3	=	=
0004	3,4	550.0,0.0	=
0005	4,5	=	=
0006	5,6	275.0,-9.61	'BEAM',2
0007	6,7	=	'BEAM',3
0008	7,8	=	'BEAM',4
0009	8,9	=	'BEAM',5
0010	9,10	216.67,-25.80	'BEAM',6
0011	10,11	216.67,-56.12	'BEAM',7
0012	11,12	216.67,-29.05	'BEAM',8
0013	12,13	149.0,-5.58	'BEAM',9
0014	13,14	564.2,0.0	'BEAM',10
0015	14,15	=	=
0016	15,16	=	=
0017	16,17	=	=
0018	17,18	=	=
0019	18,19	432.5,0.0	=
0020	19,20	=	=
0021	23,24	=	=
0022	24,25	=	=
0023	28,29	=	=
0024	29,30	=	=
0025	20,21	585.0,0.0	=
0026	21,22	=	=
0027	22,23	=	=
0028	25,26	=	=
0029	26,27	=	=
0030	27,28	=	=
0031	30,31	449.0,0.0	=

'LINKS/3'

LINE	MEMBER	PROJECTIONS,,MM	SECTION
0001			
0002	18,41	0.0,400.0	'BEAM',11,'PIN',1
0003	20,43	=	=
0004	23,44	=	=
0005	25,46	=	=
0006	28,47	=	=
0007	30,49	=	=

```
0008    42,50          0.0,100.0       'BEAM',11,'PIN',1
0009    45,52             =                    =
0010    51,53             =                    =
0011    48,55          0.0,200.0       'BEAM',11,'PIN',1
0012    54,56          0.0,1000.0      'BEAM',11,'PIN',1
0013    41,42        484.0,0.0            'BEAM',11
0014    44,45             =                    =
0015    47,48             =                    =
0016    42,43        381.0,0.0                 =
0017    45,46             =                    =
0018    48,49             =                    =
0019    50,51       1310.0,0.0                 =
0020    51,52             =                    =
0021    53,54             =                    =
0022    54,55       2620.0,0.0                 =

        'LINKS/F'
LINE
0001    MEMBER      PROJECTIONS,,MM      SECTION
0002    18,41          0.0,400.0       'BEAM',11,'PIN',1
0003    20,43             =                    =
0004    41,42        484.0, 0.0            'BEAM',11
0005    42,43        381.0,0.0                 =
0006    42,50          0.0,1000.0      'BEAM',11,'PIN',1

        'LINKS/C'
LINE
0001    MEMBER      PROJECTIONS,,MM      SECTION
0002    23,44          0.0,400.0       'BEAM',11,'PIN',1
0003    25,46             =                    =
0004    44,45        484.0,0.0            'BEAM',11
0005    45,46        381.0,0.0                 =
0006    45,52          0.0,1000.0      'BEAM',11,'PIN',1

        'LINKS/R'
LINE
0001    MEMBER      PROJECTIONS,,MM      SECTION
0002    28,47          0.0,400.0       'BEAM',11,'PIN',1
0003    30,49             =                    =
0004    47,48        484.0,0.0            'BEAM',11
0005    48,49        381.0,0.0                 =
0006    48,55          0.0,1000.0      'BEAM',11,'PIN',1

        'LINKS/FC'
LINE
0001    MEMBER      PROJECTIONS,,MM      SECTION
0002    18,41          0.0,400.0       'BEAM',11,'PIN',1
0003    20,43             =                    =
0004    23,44             =                    =
0005    25,46             =                    =
0006    41,42        484.0,0.0            'BEAM',11
0007    44,45             =                    =
0008    42,43        381.0,0.0                 =
0009    45,46             =                    =
0010    50,51       1310.0,0.0                 =
0011    51,52             =                    =
0012    42,50          0.0,100.0       'BEAM',11,'PIN',1
0013    45,52             =                    =
0014    51,53          0.0,1000.0      'BEAM',11,'PIN',1

        'SUPPORTS/KP3'
LINE
0001    JOINTS      DIRECTIONS      LINEAR      ANGULAR
0002    3,56        'X','Y'           -1           -1
0003    3             'Z'             -1            0
0004    56            'Z'             -1           -1
```

'SUPPORTS/LL3'

LINE	JOINTS	DIRECTIONS	LINEAR	ANGULAR
0001	12,56	'X','Y'	-1	-1
0002	12	'Z'	-1	0
0003	56	'Z'	-1	-1

'SUPPORTS/F'

LINE	JOINTS	DIRECTIONS	LINEAR	ANGULAR
0001	3,50	'X','Y'	-1	-1
0002	3	'Z'	-1	0
0003	50	'Z'	-1	-1

'SUPPORTS/C'

LINE	JOINTS	DIRECTIONS	LINEAR	ANGULAR
0001	3,52	'X','Y'	-1	-1
0002	3	'Z'	-1	0
0003	52	'Z'	-1	-1

'SUPPORTS/R'

LINE	JOINTS	DIRECTIONS	LINEAR	ANGULAR
0001	3,55	'X','Y'	-1	-1
0002	3	'Z'	-1	0
0003	55	'Z'	-1	-1

'SUPPORTS/FC'

LINE	JOINTS	DIRECTIONS	LINEAR	ANGULAR
0001	3,53	'X','Y'	-1	-1
0002	3	'Z'	-1	0
0003	53	'Z'	-1	-1

'LOADING/1'

LINE	POSITION	DIRECTION	LOAD,,KN
0001	1,2	'Y'	-7.9635
0002	2,3	=	=
0003	3,4	=	-6.4649
0004	4,5	=	=
0005	5,6	=	-3.2324
0006	6,7	=	=
0007	7,8	=	=
0008	8,9	=	=
0009	9,10	=	-2.5468
0010	10,11	=	=
0011	11,12	=	=
0012	12,13	=	-1.7514
0013	13,14	=	-3.6318
0014	14,15	=	=
0015	15,16	=	=
0016	16,17	=	=
0017	17,18	=	=
0018	18,19	=	-5.0837
0019	19,20	=	=
0020	23,24	=	=
0021	24,25	=	=
0022	28,29	=	=
0023	29,30	=	=
0024	20,21	=	-6.8763
0025	21,22	=	=
0026	22,23	=	=
0027	25,26	=	=
0028	26,27	=	=
0029	27,28	=	=
0030	30,31	=	-5.2777

'LOADING/V2C1'

LINE	POSITION	DIRECTION	LOAD,,KN	MOMENT,,KN*M
0001				
0002	1,2	'Y'	-26.300	0.0
0003	2,3	"	-25.223	"
0004	3,4	"	-19.684	"
0005	4,5	"	-18.975	"
0006	5,6	"	-9.221	"
0007	6,7	"	-9.004	"
0008	7,8	"	-8.866	"
0009	8,9	"	-8.689	"
0010	9,10	"	-6.721	"
0011	10,11	"	-6.611	"
0012	11,12	"	-6.501	"
0013	12,13	"	-4.406	"
0014	13,14	"	-16.213	"
0015	14,15	"	-15.466	"
0016	15,16	"	-14.720	"
0017	16,17	"	-13.973	"
0018	17,18	"	-13.226	"
0019	18,19	"	-9.633	"
0020	19,20	"	-9.194	"
0021	20,21	"	-11.738	"
0022	21,22	"	-10.935	"
0023	22,23	"	-10.132	"
0024	23,24	"	-6.974	"
0025	24,25	"	-6.535	"
0026	25,26	"	-8.142	"
0027	26,27	"	-7.339	"
0028	27,28	"	-6.536	"
0029	28,29	"	-4.316	"
0030	29,30	"	-3.877	"
0031	30,31	"	-3.560	"
0032	18	'Z'	0.0	11.138
0033	23	"	"	"
0034	28	"	"	"
0035	42	"	"	12.001
0036	45	"	"	"
0037	48	"	"	"

```
*MASTER
STRUCTURE IS A PLANEFRAME
CONSTANTS E 70.0,,KN/MM**2
USE MEMBERS 'MEMBERS','LINKS/3'
USE SUPPORTS 'SUPPORTS/KP3'
APPLY 'LOADING/V2L1'
PRINT ALL RESULTS
APPLY 'LOADING/1'
PRINT ALL RESULTS
CONSTANTS E 70.0,,KN/MM**2
USE MEMBERS 'MEMBERS','LINKS/3'
USE SUPPORTS 'SUPPORTS/LL3'
APPLY 'LOADING/1'
PRINT ALL RESULTS
CONSTANTS E 70.0,,KN/MM**2
USE MEMBERS 'MEMBERS','LINKS/F'
USE SUPPORTS 'SUPPORTS/F'
APPLY 'LOADING/1'
PRINT ALL RESULTS
CONSTANTS E 70.0,,KN/MM**2
USE MEMBERS 'MEMBERS','LINKS/C'
USE SUPPORTS 'SUPPORTS/C'
APPLY 'LOADING/1'
PRINT ALL RESULTS
CONSTANTS E 70.0,,KN/MM**2
USE MEMBERS 'MEMBERS','LINKS/R'
USE SUPPORTS 'SUPPORTS/R'
APPLY 'LOADING/1'
PRINT ALL RESULTS
CONSTANTS E 70.0,,KN/MM**2
USE MEMBERS 'MEMBERS','LINKS/FC'
USE SUPPORTS 'SUPPORTS/FC'
APPLY 'LOADING/1'
PRINT ALL RESULTS
```

SUBSYSTEM FRAME-ANALYSIS/2 -- VERSION 2.4 - RESULTS
****

RESULTS FOR SUPPORT AT KING-PIN AND 3 AXLES - LOADING/V2L1 - (CASE 1)
****

NUMBER OF JOINTS = 47
NUMBER OF MEMBERS = 51

NEW NUMBERING SCHEME WITH MAXIMUM
JOINT NUMBER DIFFERENCE OF 4
FOR INTERNAL USE ONLY,
WILL BE USED BY THE SUBSYSTEM

NUMBER OF SUPPORTS = 2

'REACTIONS IN GROUP SUPPORTS/KP3'

JOINT	DIRECTION	FORCE KN	MOMENT KN*M	LOADCASE
3	'X'	0.214	0.000	'LOADING/V2L1'
3	'Y'	187.793	0.000	'LOADING/V2L1'
3	'Z'	0.000	0.000	'LOADING/V2L1'
56	'X'	0.000	0.000	'LOADING/V2L1'
56	'Y'	134.952	0.000	'LOADING/V2L1'
56	'Z'	0.000	0.000	'LOADING/V2L1'

'FORCES IN GROUP MEMBERS'

MEMBER	COMPRESSION KN		SHEAR KN		MOMENT KN*M		LOADCASE
1, 2	0.000,	0.000	-0.001,	-26.300	-0.001,	8.910	'LOADING/V2L1'
2, 3	0.000,	0.000	-26.301,	-51.523	8.908,	35.272	'LOADING/V2L1'
3, 4	0.214,	0.214	136.270,	116.586	35.272,	-34.296	'LOADING/V2L1'
4, 5	0.214,	0.214	116.586,	97.611	-34.298,	-93.228	'LOADING/V2L1'
5, 6	-3.195,	-2.894	97.551,	88.445	-93.222,	-118.833	'LOADING/V2L1'
6, 7	-2.873,	-2.556	88.336,	79.338	-118.833,	-141.900	'LOADING/V2L1'
7, 8	-2.558,	-2.247	79.380,	70.477	-141.896,	-162.533	'LOADING/V2L1'
8, 9	-2.251,	-1.949	70.477,	61.797	-162.521,	-180.730	'LOADING/V2L1'
9, 10	-7.097,	-6.366	61.401,	54.723	-180.732,	-193.441	'LOADING/V2L1'
10, 11	-13.679,	-12.161	53.350,	46.950	-193.443,	-204.702	'LOADING/V2L1'
11, 12	-6.445,	-5.581	48.089,	41.626	-204.664,	-214.574	'LOADING/V2L1'
12, 13	-1.572,	-1.407	42.021,	37.586	-214.519,	-220.432	'LOADING/V2L1'
13, 14	0.000,	0.000	37.621,	21.402	-220.430,	-237.068	'LOADING/V2L1'
14, 15	0.000,	0.000	21.392,	5.943	-237.070,	-244.762	'LOADING/V2L1'
15, 16	0.000,	0.000	5.911,	-8.843	-244.765,	-243.946	'LOADING/V2L1'
16, 17	0.000,	0.000	-8.774,	-22.760	-243.944,	-235.039	'LOADING/V2L1'
17, 18	0.000,	0.000	-22.804,	-36.028	-235.035,	-218.450	'LOADING/V2L1'
18, 19	0.000,	0.000	-30.026,	-39.659	-207.309,	-192.271	'LOADING/V2L1'
19, 20	0.000,	0.000	-39.643,	-48.914	-192.224,	-173.144	'LOADING/V2L1'
23, 24	0.000,	0.000	-36.551,	-43.526	-114.966,	-97.623	'LOADING/V2L1'
24, 25	0.000,	0.000	-43.591,	-50.127	-97.624,	-77.357	'LOADING/V2L1'
28, 29	0.000,	0.000	-27.147,	-31.464	-26.332,	-13.629	'LOADING/V2L1'
29, 30	0.000,	0.000	-31.508,	-35.386	-13.637,	0.838	'LOADING/V2L1'
20, 21	0.000,	0.000	-9.913,	-21.638	-173.126,	-163.924	'LOADING/V2L1'
21 22	0.000,	0.000	-21.604,	-32.513	-163.926,	-148.094	'LOADING/V2L1'
22, 23	0.000,	0.000	-32.505,	-42.637	-148.098,	-126.105	'LOADING/V2L1'
25, 26	0.000,	0.000	-11.207	-19.347	-77.358,	-68.428	'LOADING/V2L1'
26, 27	0.000,	0.000	-19.339,	-26.677	-68.431,	-54.974	'LOADING/V2L1'
27, 28	0.000,	0.000	-26.664,	-33.199	-54.980,	-37.469	'LOADING/V2L1'
30, 31	0.000,	0.000	3.581,	0.012	0.832,	0.009	'LOADING/V2L1'

'FORCES IN GROUP LINKS/3'

MEMBER	COMPRESSION KN		SHEAR KN		MOMENT KN*M		LOADCASE
18, 41	-7.000,	-7.000	0.000,	0.000	0.000,	0.000	'LOADING/V2L1'
20, 43	-39.000,	-39.000	0.000,	0.000	0.000,	0.000	'LOADING/V2L1'
23, 44	-6.000,	-6.000	0.000,	0.000	0.000,	0.000	'LOADING/V2L1'
25, 46	-38.938,	-38.938	0.000,	0.000	0.000,	0.000	'LOADING/V2L1'
28, 47	-6.000,	-6.000	0.000,	0.000	0.000,	0.000	'LOADING/V2L1'
30, 49	-39.000,	-39.000	0.000,	0.000	0.000,	0.000	'LOADING/V2L1'
42, 50	-44.000,	-44.000	0.000,	0.000	0.000,	0.000	'LOADING/V2L1'
45, 52	-44.000,	-44.000	0.000,	0.000	0.000,	0.000	'LOADING/V2L1'
51, 53	-90.000,	-90.000	0.000,	0.000	0.000,	0.000	'LOADING/V2L1'
48, 55	-45.000,	-45.000	0.000,	0.000	0.000,	0.000	'LOADING/V2L1'
54, 56	-134.952,	-134.952	0.000,	0.000	0.000,	0.000	'LOADING/V2L1'
41, 42	0.000,	0.000	-5.000,	-5.000	0.000,	2.875	'LOADING/V2L1'
44, 45	0.000,	0.000	-6.000,	-6.000	-0.063,	2.938	'LOADING/V2L1'
47, 48	0.000,	0.000	-6.000,	-6.000	0.000,	3.000	'LOADING/V2L1'
42, 43	0.000,	0.000	39.000,	39.000	15.000,	0.000	'LOADING/V2L1'
45, 46	0.000,	0.000	39.188,	39.188	14.945,	0.063	'LOADING/V2L1'
48, 49	0.000,	0.000	38.000,	38.000	15.000,	-1.000	'LOADING/V2L1'
50, 51	0.000,	0.000	-45.000,	-45.000	0.000,	58.938	'LOADING/V2L1'
51, 52	0.000,	0.000	44.973,	44.973	58.918,	0.012	'LOADING/V2L1'
53, 54	0.000,	0.000	-89.930,	-89.930	-0.004,	117.859	'LOADING/V2L1'
54, 55	0.000,	0.000	44.977,	44.977	117.852,	0.008	'LOADING/V2L1'

'DISPLACEMENTS IN GROUP MEMBERS'

JOINT	XDEF MM	YDEF MM	ZROT RAD	LOADCASE
1	0.000	29.430	-0.021	'LOADING/V2L1'
2	-0.000	14.932	-0.022	'LOADING/V2L1'
3	-0.000	-0.000	-0.023	'LOADING/V2L1'
4	-0.000	-12.693	-0.023	'LOADING/V2L1'
5	-0.000	-24.477	-0.020	'LOADING/V2L1'
6	-0.176	-29.542	-0.017	'LOADING/V2L1'
7	-0.328	-33.910	-0.015	'LOADING/V2L1'
8	-0.454	-37.550	-0.012	'LOADING/V2L1'
9	-0.555	-40.456	-0.009	'LOADING/V2L1'
10	-0.765	-42.240	-0.007	'LOADING/V2L1'
11	-1.131	-43.665	-0.006	'LOADING/V2L1'
12	-1.287	-44.845	-0.005	'LOADING/V2L1'
13	-1.313	-45.546	-0.004	'LOADING/V2L1'
14	-1.313	-47.409	-0.002	'LOADING/V2L1'
15	-1.313	-47.961	0.000	'LOADING/V2L1'
16	-1.313	-47.157	0.003	'LOADING/V2L1'
17	-1.313	-45.003	0.005	'LOADING/V2L1'
18	-1.313	-41.547	0.007	'LOADING/V2L1'
19	-1.313	-38.090	0.009	'LOADING/V2L1'
20	-1.313	-34.005	0.010	'LOADING/V2L1'
23	-1.313	-11.881	0.015	'LOADING/V2L1'
24	-1.313	-5.279	0.016	'LOADING/V2L1'
25	-1.313	1.641	0.016	'LOADING/V2L1'
28	-1.313	32.090	0.018	'LOADING/V2L1'
29	-1.313	39.988	0.018	'LOADING/V2L1'
30	-1.313	47.930	0.018	'LOADING/V2L1'
21	-1.313	-27.575	0.012	'LOADING/V2L1'
22	-1.313	-20.168	0.013	'LOADING/V2L1'
26	-1.313	11.411	0.017	'LOADING/V2L1'
27	-1.313	21.587	0.018	'LOADING/V2L1'
31	-1.313	56.181	0.018	'LOADING/V2L1'

'DISPLACEMENTS IN GROUP LINKS/3'

JOINT	XDEF MM	YDEF MM	ZROT RAD	LOADCASE
18	-1.313	-41.547	0.007	'LOADING/V2L1'
41	0.000	-41.547	0.009	'LOADING/V2L1'
20	-1.313	-34.005	0.010	'LOADING/V2L1'
43	0.000	-34.004	0.009	'LOADING/V2L1'
23	-1.313	-11.881	0.015	'LOADING/V2L1'
44	0.000	-11.881	0.016	'LOADING/V2L1'
25	-1.313	1.641	0.016	'LOADING/V2L1'
46	0.000	1.641	0.016	'LOADING/V2L1'
28	-1.313	33.090	0.018	'LOADING/V2L1'
47	0.000	33.090	0.018	'LOADING/V2L1'
30	-1.313	47.930	0.018	'LOADING/V2L1'
49	0.000	47.930	0.018	'LOADING/V2L1'
42	0.000	-37.326	0.009	'LOADING/V2L1'
50	0.000	-37.326	0.013	'LOADING/V2L1'
45	0.000	-4.314	0.016	'LOADING/V2L1'
52	0.000	-4.314	0.013	'LOADING/V2L1'
51	0.000	-20.772	0.013	'LOADING/V2L1'
53	0.000	-20.772	0.016	'LOADING/V2L1'
48	0.000	40.954	0.018	'LOADING/V2L1'
55	0.000	40.954	0.016	'LOADING/V2L1'
54	0.000	-0.004	0.016	'LOADING/V2L1'
56	0.000	-0.000	0.000	'LOADING/V2L1'

RESULTS FOR SUPPORT AT KING-PIN AND 3 AXLES - LOADING/1 - (CASE 2)
****

NUMBER OF JOINTS = 47
NUMBER OF MEMBERS = 51

NEW NUMBERING SCHEME WITH MAXIMUM
JOINT NUMBER DIFFERENCE OF 4
FOR INTERNAL USE ONLY,
WILL BE USED BY THE SUBSYSTEM

NUMBER OF SUPPORTS = 2

'REACTIONS IN GROUP SUPPORTS/KP3'

JOINT	DIRECTION	FORCE KN	MOMENT KN*M	LOADCASE
3	'X'	0.069	0.000	'LOADING/1'
3	'Y'	61.736	0.000	'LOADING/1'
3	'Z'	000	0.000	'LOADING/1'
56	'X'	0.000	0.000	'LOADING/1'
56	'Y'	99.645	0.000	'LOADING/1'
56	'Z'	0.000	0.000	'LOADING/1'

'FORCES IN GROUP MEMBERS'

MEMBER	COMPRESSION KN		SHEAR KN		MOMENT KN*M		LOADCASE
1, 2	0.000,	0.000	-0.000,	-7.964	0.000,	2.697	'LOADING/1'
2, 3	0.000,	0.000	-7.964,	-15.928	2.697,	10.790	'LOADING/1'
3, 4	0.069,	0.069	45.809,	39.344	10.790,	-12.627	'LOADING/1'
4, 5	0.069,	0.069	39.338,	32.873	-12.627,	-32.488	'LOADING/1'
5, 6	-1.079,	-0.966	32.849,	29.619	-32.488,	-41.090	'LOADING/1'
6, 7	-0.967,	-0.852	29.603,	26.347	-41.086,	-48.797	'LOADING/1'
7, 8	-0.854,	-0.745	26.398,	23.178	-48.793,	-55.617	'LOADING/1'
8, 9	-0.739,	-0.628	23.140,	19.927	-55.613,	-61.547	'LOADING/1'
9, 10	-2.290,	-2.009	19.815,	17.281	-61.540,	-65.606	'LOADING/1'
10, 11	-4.319,	-3.725	16.867,	14.381	-65.599,	-69.110	'LOADING/1'
11, 12	-1.974,	-1.636	14.723,	12.206	-69.079,	-72.142	'LOADING/1'
12, 13	-0.461,	-0.395	12.341,	10.750	-72.103,	-73.728	'LOADING/1'
13, 14	0.000,	0.000	10.558,	3.926	-73.751,	-77.841	'LOADING/1'
14, 15	0.000,	0.000	3.917,	-2.714	-77.837,	-78.180	'LOADING/1'
15, 16	0.000,	0.000	-2.715,	-9.347	-78.176,	-74.778	'LOADING/1'
16, 17	0.000,	0.000	-9.344,	-15.976	-74.774,	-67.633	'LOADING/1'
17, 18	0.000,	0.000	-15.973,	-22.605	-67.633,	-56.751	'LOADING/1'
18, 19	0.000,	0.000	-7.958,	-13.042	-56.758,	-52.203	'LOADING/1'
19, 20	0.000,	0.000	-13.021,	-18.104	-52.203,	-45.478	'LOADING/1'
23, 24	0.000,	0.000	-5.540,	-10.624	-28.149,	-24.657	'LOADING/1'
24, 25	0.000,	0.000	-10.618,	-15.702	-24.660,	-18.971	'LOADING/1'
28, 29	0.000,	0.000	-3.021,	-8.104	-5.891,	-3.457	'LOADING/1'
29, 30	0.000,	0.000	-8.208,	-13.292	-3.457,	1.191	'LOADING/1'
20, 21	0.000,	0.000	0.438,	-6.438	-45.469,	-43.716	'LOADING/1'
21, 22	0.000,	0.000	-6.437,	-13.313	-43.719,	-37.946	'LOADING/1'
22, 23	0.000,	0.000	-13.316,	-20.192	-37.942,	-28.145	'LOADING/1'
25, 26	0.000,	0.000	2.852,	-4.024	-18.973,	-18.634	'LOADING/1'
26, 27	0.000,	0.000	-4.019,	-10.895	-18.634,	-14.278	'LOADING/1'
27, 28	0.000,	0.000	-10.898,	-17.774	-14.278,	-5.891	'LOADING/1'
30, 31	0.000,	0.000	5.264,	-0.014	1.186,	-0.006	'LOADING/1'

'FORCES IN GROUP LINKS/3'

MEMBER	COMPRESSION KN		SHEAR KN		MOMENT KN*M	LOADCASE
18, 41	-14.000,	-14.000	0.000,	0.000	0.000, 0.000	'LOADING/1'
20, 43	-18.563,	-18.563	0.000,	0.000	0.000, 0.000	'LOADING/1'
23, 44	-14.688,	-14.688	0.000,	0.000	0.000, 0.000	'LOADING/1'
25, 46	-18.559,	-18.559	0.000,	0.000	0.000, 0.000	'LOADING/1'
28, 47	-14.688,	-14.688	0.000,	0.000	0.000, 0.000	'LOADING/1'
30, 49	-19.000,	-19.000	0.000,	0.000	0.000, 0.000	'LOADING/1'
42, 50	-34.000,	-34.000	0.000,	0.000	0.000, 0.000	'LOADING/1'
45, 52	-33.250,	-33.250	0.000,	0.000	0.000, 0.000	'LOADING/1'
51, 53	-66.000,	-66.000	0.000,	0.000	0.000, 0.000	'LOADING/1'
48, 55	-34.000,	-34.000	0.000,	0.000	0.000, 0.000	'LOADING/1'
54, 56	-99.645,	-99.645	0.000,	0.000	0.000, 0.000	'LOADING/1'
41, 42	0.000,	0.000	-14.688,	-14.688	0.000, 7.063	'LOADING/1'
44, 45	0.000,	0.000	-14.813,	-14.813	-0.008, 7.102	'LOADING/1'
47, 48	0.000,	0.000	-14.813,	-14.813	-0.063, 7.125	'LOADING/1'
42, 43	0.000,	0.000	18.000,	18.000	7.063, 0.000	'LOADING/1'
45, 46	0.000,	0.000	18.500,	18.500	7.074, 0.020	'LOADING/1'
48, 49	0.000,	0.000	19.000,	19.000	7.063, 0.063	'LOADING/1'
50, 51	0.000,	0.000	-33.219,	-33.219	-0.004, 43.512	'LOADING/1'
51, 52	0.000,	0.000	33.223,	33.223	43.516, 0.000	'LOADING/1'
53, 54	0.000,	0.000	-66.434,	-66.434	0.000, 87.027	'LOADING/1'
54, 55	0.000,	0.000	33.212,	33.212	87.016, 0.007	'LOADING/1'

'DISPLACEMENTS IN GROUP MEMBERS'

JOINT	XDEF MM	YDEF MM	ZROT RAD	LOADCASE
1	-0.000	9.858	-0.007	'LOADING/1'
2	-0.000	4.994	-0.007	'LOADING/1'
3	-0.000	-0.000	-0.008	'LOADING/1'
4	-0.000	-4.219	-0.008	'LOADING/1'
5	-0.000	-8.102	-0.006	'LOADING/1'
6	-0.057	-9.754	-0.006	'LOADING/1'
7	-0.105	-11.165	-0.005	'LOADING/1'
8	-0.145	-12.325	-0.004	'LOADING/1'
9	-0.176	-13.234	-0.003	'LOADING/1'
10	-0.239	-13.776	-0.002	'LOADING/1'
11	-0.345	-14.191	-0.002	'LOADING/1'
12	-0.389	-14.518	-0.001	'LOADING/1'
13	-0.396	-14.704	-0.001	'LOADING/1'
14	-0.396	-15.147	-0.000	'LOADING/1'
15	-0.396	-15.160	0.000	'LOADING/1'
16	-0.396	-14.741	0.001	'LOADING/1'
17	-0.396	-13.909	0.002	'LOADING/1'
18	-0.396	-12.703	0.002	'LOADING/1'
19	-0.396	-11.559	0.003	'LOADING/1'
20	-0.396	-10.245	0.003	'LOADING/1'
23	-0.396	-3.451	0.004	'LOADING/1'
24	-0.396	-1.487	0.005	'LOADING/1'
25	-0.396	0.556	0.005	'LOADING/1'
28	-0.396	9.458	0.005	'LOADING/1'
29	-0.396	11.748	0.005	'LOADING/1'
30	-0.396	14.049	0.005	'LOADING/1'
21	-0.396	-8.227	0.004	'LOADING/1'
22	-0.396	-5.951	0.004	'LOADING/1'

26	-0.396	3.422	0.005	'LOADING/1'
27	-0.396	6.399	0.005	'LOADING/1'
31	-0.396	16.438	0.005	'LOADING/1'

'DISPLACEMENTS IN GROUP LINKS/3'

JOINT	XDEF MM	YDEF MM	ZROT RAD	LOADCASE
18	-0.396	-12.703	0.002	'LOADING/1'
41	0.000	-12.702	0.003	'LOADING/1'
20	-0.396	-10.245	0.003	'LOADING/1'
43	0.000	-10.245	0.003	'LOADING/1'
23	-0.396	-3.451	0.004	'LOADING/1'
44	0.000	-3.450	0.005	'LOADING/1'
25	-0.396	0.556	0.005	'LOADING/1'
46	0.000	0.556	0.005	'LOADING/1'
28	-0.396	9.458	0.005	'LOADING/1'
47	0.000	9.458	0.005	'LOADING/1'
30	-0.396	14.049	0.005	'LOADING/1'
49	0.000	14.049	0.005	'LOADING/1'
42	0.000	-11.327	0.003	'LOADING/1'
50	0.000	-11.326	0.004	'LOADING/1'
45	0.000	-1.208	0.005	'LOADING/1'
52	0.000	-1.208	0.004	'LOADING/1'
51	0.000	-6.232	0.004	'LOADING/1'
53	0.000	-6.232	0.005	'LOADING/1'
48	0.000	12.028	0.005	'LOADING/1'
55	0.000	12.028	0.005	'LOADING/1'
54	0.000	-0.003	0.005	'LOADING/1'
56	0.000	-0.000	0.000	'LOADING/1'

RESULTS FOR SUPPORT AT LANDING LEGS AND 3 AXLES - LOADING/1 - (CASE 3)
****

NUMBER OF JOINTS = 47
NUMBER OF MEMBERS = 51

NEW NUMBERING SCHEME WITH MAXIMUM
JOINT NUMBER DIFFERENCE OF 4
,FOR INTERNAL USE ONLY,
WILL BE USED BY THE SUBSYSTEM

NUMBER OF SUPPORTS = 2

'REACTIONS IN GROUP SUPPORTS/LL3'

JOINT	DIRECTION	FORCE KN	MOMENT KN*M	LOADCASE
12	'X'	0.008	0.000	'LOADING/1'
12	'Y'	90.724	0.000	'LOADING/1'
12	'Z'	0.000	0.000	'LOADING/1'
56	'X'	0.000	0.000	'LOADING/1'
56	'Y'	70.654	0.000	'LOADING/1'
56	'Z'	0.000	0.000	'LOADING/1'

'FORCES IN GROUP MEMBERS'

MEMBER	COMPRESSION KN		SHEAR KN		MOMENT KN*M		LOADCASE
1, 2	0.000,	0.000	0.001,	-7.962	-0.004,	2.700	'LOADING/1'
2, 3	0.000,	0.000	-7.964,	-15.927	2.699,	10.790	'LOADING/1'
3, 4	0.000,	0.000	-15.928,	-22.393	10.794,	21.328	'LOADING/1'
4, 5	0.000,	0.000	-22.393,	-28.857	21.328,	35.423	'LOADING/1'
5, 6	1.016,	1.125	-28.829,	-32.050	35.422,	43.801	'LOADING/1'
6, 7	1.131,	1.242	-32.078,	-35.305	43.805,	53.062	'LOADING/1'
7, 8	1.241,	1.354	-35.289,	-38.521	53.062,	63.223	'LOADING/1'
8, 9	1.354,	1.467	-38.536,	-41.763	63.224,	74.258	'LOADING/1'
9, 10	4.949,	5.248	-41.493,	-44.029	74.269,	83.593	'LOADING/1'
10, 11	11.121,	11.755	-42.934,	-45.396	83.600,	93.482	'LOADING/1'
11, 12	6.230,	6.568	-46.464,	-48.989	93.485,	103.924	'LOADING/1'
12, 13	-1.545,	-1.480	41.288,	39.558	103.928,	97.898	'LOADING/1'
13, 14	0.000,	0.000	39.546,	32.915	97.902,	77.463	'LOADING/1'
14, 15	0.000,	0.000	32.910,	26.278	77.462,	60.765	'LOADING/1'
15, 16	0.000,	0.000	26.277,	19.645	60.765,	47.809	'LOADING/1'
16, 17	0.000,	0.000	19.648,	13.016	47.808,	38.594	'LOADING/1'
17, 18	0.000,	0.000	13.015,	6.383	38.594,	33.122	'LOADING/1'
18, 19	0.000,	0.000	16.757,	11.673	33.121,	26.976	'LOADING/1'
19, 20	0.000,	0.000	11.667,	6.583	26.976,	23.027	'LOADING/1'
23, 24	0.000,	0.000	9.502,	4.418	6.439,	3.428	'LOADING/1'
24, 25	0.000,	0.000	4.420,	-0.663	3.428,	2.616	'LOADING/1'
28, 29	0.000,	0.000	2.257,	-2.827	-1.254,	-1.141	'LOADING/1'
29, 30	0.000,	0.000	-2.825,	-7.909	-1.133,	1.183	'LOADING/1'
20, 21	0.000,	0.000	19.756,	12.890	23.028,	13.476	'LOADING/1'
21, 22	0.000,	0.000	12.891,	6.015	13.476,	7.946	'LOADING/1'
22, 23	0.000,	0.000	6.011,	-0.865	7.946,	6.439	'LOADING/1'
25, 26	0.000,	0.000	12.523,	5.647	2.615,	-2.699	'LOADING/1'
26, 27	0.000,	0.000	5.645,	-1.231	-2.698,	-3.990	'LOADING/1'
27, 28	0.000,	0.000	-1.230,	-8.106	-3.990,	-1.259	'LOADING/1'
30, 31	0.000,	0.000	5.279,	0.002	1.186,	-0.002	'LOADING/1'

'FORCES IN GROUP LINKS/3'

MEMBER	COMPRESSION KN		SHEAR KN		MOMENT KN*M		LOADCASE
18, 41	-10.375,	-10.375	0.000,	0.000	0.000,	0.000	'LOADING/1'
20, 43	-13.188,	-13.188	0.000,	0.000	0.000,	0.000	'LOADING/1'
23, 44	-10.367,	-10.367	0.000,	0.000	0.000,	0.000	'LOADING/1'
25, 46	-13.180,	-13.180	0.000,	0.000	0.000,	0.000	'LOADING/1'
28, 47	-10.375,	-10.375	0.000,	0.000	0.000,	0.000	'LOADING/1'
30, 49	-13.188,	-13.188	0.000,	0.000	0.000,	0.000	'LOADING/1'
42, 50	-23.563,	-23.563	0.000,	0.000	0.000,	0.000	'LOADING/1'
[illegible], 52	-23.551,	-23.551	0.000,	0.000	0.000,	0.000	'LOADING/1'
51, 53	-47.063,	-47.063	0.000,	0.000	0.000,	0.000	'LOADING/1'
48, 55	-23.500,	-23.500	0.000,	0.000	0.000,	0.000	'LOADING/1'
54, 56	-70.654,	-70.654	0.000,	0.000	0.000,	0.000	'LOADING/1'
41, 42	0.000,	0.000	-10.313,	-10.313	0.000,	5.020	'LOADING/1'
44, 45	0.000,	0.000	-10.359,	-10.359	-0.000,	5.016	'LOADING/1'
47, 48	0.000,	0.000	-10.375,	-10.375	0.004,	5.016	'LOADING/1'
42, 43	0.000,	0.000	13.188,	13.188	5.063,	0.063	'LOADING/1'
45, 46	0.000,	0.000	13.184,	13.184	5.020,	0.002	'LOADING/1'
48, 49	0.000,	0.000	13.188,	13.188	5.000,	0.000	'LOADING/1'
50, 51	0.000,	0.000	-23.551,	-23.551	-0.004,	30.855	'LOADING/1'
51, 52	0.000,	0.000	23.551,	23.551	30.853,	-0.000	'LOADING/1'
53, 54	0.000,	0.000	-47.105,	-47.105	0.000,	61.704	'LOADING/1'
54, 55	0.000,	0.000	23.552,	23.552	61.705,	-0.000	'LOADING/1'

'DISPLACEMENTS IN GROUP MEMBERS'

JOINT	XDEF MM	YDEF MM	ZROT RAD	LOADCASE
1	-0.064	-35.903	0.011	'LOADING/1'
2	-0.064	-25.970	0.011	'LOADING/1'
3	-0.064	-20.768	0.011	'LOADING/1'
4	-0.064	-14.995	0.010	'LOADING/1'
5	-0.064	-9.810	0.009	'LOADING/1'
6	-0.056	-7.545	0.008	'LOADING/1'
7	-0.050	-5.537	0.007	'LOADING/1'
8	-0.044	-3.803	0.006	'LOADING/1'
9	-0.039	-2.355	0.005	'LOADING/1'
10	-0.028	-1.423	0.004	'LOADING/1'
11	-0.009	0.652	0.003	'LOADING/1'
12	-0.000	-0.000	0.003	'LOADING/1'
13	0.015	0.394	0.003	'LOADING/1'
14	0.015	1.562	0.002	'LOADING/1'
15	0.015	2.297	0.000	'LOADING/1'
16	0.015	2.694	0.000	'LOADING/1'
17	0.015	2.824	0.000	'LOADING/1'
18	0.015	2.737	-0.000	'LOADING/1'
19	0.015	2.547	-0.000	'LOADING/1'
20	0.015	2.269	-0.000	'LOADING/1'
23	0.015	0.589	-0.001	'LOADING/1'
24	0.015	0.107	-0.001	'LOADING/1'
25	0.015	-0.386	-0.001	'LOADING/1'
28	0.015	-2.361	-0.001	'LOADING/1'
29	0.015	-2.826	-0.001	'LOADING/1'
30	0.015	-3.288	-0.001	'LOADING/1'
21	0.015	1.780	-0.000	'LOADING/1'
22	0.015	1.209	-0.001	'LOADING/1'
26	0.015	-1.061	-0.001	'LOADING/1'
27	0.015	-1.722	-0.001	'LOADING/1'
31	0.015	-3.768	-0.001	'LOADING/1'

'DISPLACEMENTS IN GROUP LINKS/3'

JOINT	XDEF MM	YDEF MM	ZROT RAD	LOADCASE
18	0.015	2.737	-0.000	'LOADING/1'
41	0.000	2.738	-0.000	'LOADING/1'
20	0.015	2.269	-0.000	'LOADING/1'
43	0.000	2.269	-0.000	'LOADING/1'
23	0.015	0.589	-0.001	'LOADING/1'
44	0.000	0.589	-0.001	'LOADING/1'
25	0.015	-0.386	-0.001	'LOADING/1'
46	0.000	-0.386	-0.001	'LOADING/1'
28	0.015	-2.361	-0.001	'LOADING/1'
47	0.000	-2.361	-0.001	'LOADING/1'
30	0.015	-3.288	-0.001	'LOADING/1'
49	0.000	-3.287	-0.001	'LOADING/1'
42	0.000	2.476	-0.000	'LOADING/1'
50	0.000	2.476	-0.000	'LOADING/1'
45	0.000	0.044	-0.001	'LOADING/1'
52	0.000	0.044	-0.000	'LOADING/1'
51	0.000	1.285	-0.000	'LOADING/1'
53	0.000	1.285	-0.000	'LOADING/1'
48	0.000	-2.879	-0.001	'LOADING/1'
55	0.000	-2.879	-0.001	'LOADING/1'
54	0.000	-0.002	-0.001	'LOADING/1'
56	0.000	-0.000	0.000	'LOADING/1'

RESULTS FOR SUPPORT AT KING-PIN AND FRONT AXLE - LOADING/1 - (CASE 4)
****

NUMBER OF JOINTS = 35
NUMBER OF MEMBERS = 35

NEW NUMBERING SCHEME WITH MAXIMUM
JOINT NUMBER DIFFERENCE OF 3
FOR INTERNAL USE ONLY,
WILL BE USED BY THE SUBSYSTEM

NUMBER OF SUPPORTS = 2

'REACTIONS IN GROUP SUPPORTS/F'

JOINT	DIRECTION	FORCE KN	MOMENT KN*M	LOADCASE
3	'X'	-0.033	0.000	'LOADING/1'
3	'Y'	20.352	0.000	'LOADING/1'
3	'Z'	0.000	0.000	'LOADING/1'
50	'X'	0.000	0.000	'LOADING/1'
50	'Y'	141.019	0.000	'LOADING/1'
50	'Z'	0.000	0.000	'LOADING/1'

'FORCES IN GROUP MEMBERS'

MEMBER	COMPRESSION KN		SHEAR KN		MOMENT KN*M		LOADCASE
1, 2	0.000,	0.000	0.000,	-7.963	-0.000,	2.698	'LOADING/1'
2, 3	0.000,	0.000	-7.964,	-15.928	2.698,	10.791	'LOADING/1'
3, 4	-0.033,	-0.033	4.425,	-2.040	10.791,	10.135	'LOADING/1'
4, 5	-0.033,	-0.033	-2.037,	-8.502	10.136,	13.034	'LOADING/1'
5, 6	0.264,	0.377	-8.500,	-11.733	13.039,	15.815	'LOADING/1'
6, 7	0.377,	0.490	-11.730,	-14.960	15.816,	19.492	'LOADING/1'
7, 8	0.491,	0.608	-14.972,	-18.199	19.488,	24.051	'LOADING/1'
8, 9	0.601,	0.716	-18.169,	-21.412	24.055,	29.500	'LOADING/1'
9, 10	2.501,	2.812	-21.294,	-23.834	29.503,	34.425	'LOADING/1'
10, 11	5.992,	6.652	-23.256,	-25.701	34.417,	39.913	'LOADING/1'
11, 12	3.525,	3.864	-26.295,	-28.797	39.909,	45.921	'LOADING/1'
12, 13	1.088,	1.154	-29.054,	-30.805	45.959,	50.397	'LOADING/1'
13, 14	0.000,	0.000	-30.817,	-37.449	50.394,	69.648	'LOADING/1'
14, 15	0.000,	0.000	-37.469,	-44.101	69.648,	92.659	'LOADING/1'
15, 16	0.000,	0.000	-44.075,	-50.707	92.656,	119.394	'LOADING/1'
16, 17	0.000,	0.000	-50.715,	-57.347	119.398,	149.886	'LOADING/1'
17, 18	0.000,	0.000	-57.364,	-63.996	149.882,	184.116	'LOADING/1'
18, 19	0.000,	0.000	-1.900,	-6.983	184.113,	186.043	'LOADING/1'
19, 20	0.000,	0.000	-6.985,	-12.069	186.042,	190.166	'LOADING/1'
23, 24	0.000,	0.000	46.229,	41.146	90.921,	72.023	'LOADING/1'
24, 25	0.000,	0.000	41.229,	36.146	72.027,	55.324	'LOADING/1'
28, 29	0.000,	0.000	15.417,	10.333	10.183,	4.496	'LOADING/1'
29, 30	0.000,	0.000	10.042,	4.958	4.433,	1.308	'LOADING/1'
20, 21	0.000,	0.000	66.872,	59.995	190.167,	153.063	'LOADING/1'
21, 22	0.000,	0.000	59.993,	53.117	153.058,	119.980	'LOADING/1'
22, 23	0.000,	0.000	53.126,	46.249	119.984,	90.913	'LOADING/1'
25, 26	0.000,	0.000	36.126,	29.249	55.327,	36.238	'LOADING/1'
26, 27	0.000,	0.000	29.251,	22.374	36.245,	21.171	'LOADING/1'
27, 28	0.000,	0.000	22.313,	15.437	21.179,	10.132	'LOADING/1'
30, 31	0.000,	0.000	5.451,	0.174	1.197,	-0.053	'LOADING/1'

'FORCES IN GROUP LINKS/F'

MEMBER	COMPRESSION KN		SHEAR KN		MOMEN KN*M		LOADCASE
18, 41	-62.063,	-62.063	0.000,	0.000	0.000,	0.000	'LOADING/1'
20, 43	-78.938,	-78.938	0.000,	0.000	0.000,	0.000	'LOADING/1'
41, 42	0.000,	0.000	-61.938,	-61.938	0.008,	30.039	'LOADING/1'
42, 43	0.000,	0.000	79.063,	79.063	30.055,	0.000	'LOADING/1'
42, 50	-141.019,	-141.019	0.000,	0.000	0.000,	0.000	'LOADING/1'

'DISPLACEMENTS IN GROUP MEMBERS'

JOINT	XDEF MM	YDEF MM	ZROT RAD	LOADCASE
1	0.000	-5.974	0.005	'LOADING/1'
2	0.000	-2.922	0.004	'LOADING/1'
3	0.000	-0.000	0.004	'LOADING/1'
4	0.000	2.105	0.004	'LOADING/1'
5	0.000	3.926	0.003	'LOADING/1'
6	0.027	4.713	0.003	'LOADING/1'
7	0.051	5.407	0.002	'LOADING/1'
8	0.071	6.009	0.002	'LOADING/1'
9	0.088	6.484	0.002	'LOADING/1'
10	0.122	6.782	0.001	'LOADING/1'
11	0.181	7.015	0.000	'LOADING/1'
12	0.204	7.097	0.000	'LOADING/1'
13	0.208	7.298	0.000	'LOADING/1'
14	0.208	7.487	-0.000	'LOADING/1'
15	0.208	7.287	-0.000	'LOADING/1'
16	0.208	6.572	-0.002	'LOADING/1'
17	0.208	5.192	-0.003	'LOADING/1'
18	0.208	2.978	-0.005	'LOADING/1'
19	0.208	0.614	-0.006	'LOADING/1'
20	0.208	-2.358	-0.008	'LOADING/1'
23	0.208	-19.801	-0.012	'LOADING/1'
24	0.208	-25.038	-0.012	'LOADING/1'
25	0.208	-30.510	-0.013	'LOADING/1'
28	0.208	-54.118	-0.014	'LOADING/1'
29	0.208	-60.095	-0.014	'LOADING/1'
30	0.208	-66.089	-0.014	'LOADING/1'
21	0.208	-7.323	-0.009	'LOADING/1'
22	0.208	-13.203	-0.011	'LOADING/1'
26	0.208	-38.191	-0.013	'LOADING/1'
27	0.208	-46.090	-0.014	'LOADING/1'
31	0.208	-72.315	-0.014	'LOADING/1'

'DISPLACEMENTS IN GROUP LINKS/F'

JOINT	XDEF MM	YDEF MM	ZROT RAD	LOADCASE
18	0.208	2.978	-0.005	'LOADING/1'
41	0.000	2.979	-0.006	'LOADING/1'
20	0.208	-2.358	-0.008	'LOADING/1'
43	0.000	-2.357	-0.006	'LOADING/1'
42	0.000	-0.004	-0.006	'LOADING/1'
50	0.000	-0.000	0.000	'LOADING/1'

RESULTS FOR SUPPORT AT KING-PIN AND CENTRE AXLE - LOADING/1 - (CASE 5)
****

NUMBER OF JOINTS = 35
NUMBER OF MEMBERS = 35

NEW NUMBERING SCHEME WITH MAXIMUM
JOINT NUMBER DIFFERENCE OF 3
,FOR INTERNAL USE ONLY,
WILL BE USED BY THE SUBSYSTEM

NUMBER OF SUPPORTS = 2

'REACTIONS IN GROUP SUPPORTS/C'

JOINT	DIRECTION	FORCE KN	MOMENT KN*M	LOADCASE
3	'X'	0.064	0.000	'LOADING/1'
3	'Y'	61.743	0.000	'LOADING/1'
3	'Z'	0.000	0.000	'LOADING/1'
52	'X'	0.000	0.000	'LOADING/1'
52	'Y'	99.637	0.000	'LOADING/1'
52	'Z'	0.000	0.000	'LOADING/1'

'FORCES IN GROUP MEMBERS'

MEMBER	COMPRESSION KN		SHEAR KN		MOMENT KN*M		LOADCASE
1, 2	0.000,	0.000	0.000,	-7.963	0.000,	2.697	'LOADING/1'
2, 3	0.000,	0.000	-7.964,	-15.927	2.697,	10.790	'LOADING/1'
3, 4	0.064,	0.064	45.817,	39.352	10.790,	-12.631	'LOADING/1'
4, 5	0.064,	0.064	39.350,	32.885	-12.631,	-32.497	'LOADING/1'
5, 6	-1.084,	-0.970	32.868,	29.636	-32.496,	-41.102	'LOADING/1'
6, 7	-0.972,	-0.862	29.653,	26.435	-41.094,	-48.809	'LOADING/1'
7, 8	-0.859,	-0.746	26.421,	23.183	-48.805,	-55.633	'LOADING/1'
8, 9	-0.748,	-0.633	23.175,	19.944	-55.633,	-61.555	'LOADING/1'
9, 10	-2.296,	-2.014	19.827,	17.268	-61.559,	-65.622	'LOADING/1'
10, 11	-4.328,	-3.727	16.884,	14.401	-65.622,	-69.122	'LOADING/1'
11, 12	-1.975,	-1.637	14.753,	12.187	-69.079,	-72.079	'LOADING/1'
12, 13	-0.461,	-0.195	12.208,	10.457	-72.103,	-73.791	'LOADING/1'
13, 14	0.000,	0.000	10.558,	3.926	-73.778,	-77.860	'LOADING/1'
14, 15	0.000,	0.000	3.937,	-2.695	-77.856,	-78.208	'LOADING/1'
15, 16	0.000,	0.000	-2.708,	-9.339	-78.208,	-74.809	'LOADING/1'
16, 17	0.000,	0.000	-9.333,	-15.964	-74.813,	-67.669	'LOADING/1'
17, 18	0.000,	0.000	-15.977,	-22.609	-67.673,	-56.790	'LOADING/1'
18, 19	0.000,	0.000	-22.583,	-27.667	-56.786,	-45.922	'LOADING/1'
19, 20	0.000,	0.000	-27.708,	-32.792	-45.922,	-32.848	'LOADING/1'
23, 24	0.000,	0.000	-9.493,	-14.577	42.756,	47.958	'LOADING/1'
24, 25	0.000,	0.000	-14.575,	-19.659	47.958,	55.359	'LOADING/1'
28, 29	0.000,	0.000	15.436,	10.353	10.144,	4.570	'LOADING/1'
29, 30	0.000,	0.000	10.354,	5.271	4.566,	1.187	'LOADING/1'
20, 21	0.000,	0.000	-32.769,	-39.645	-32.848,	-11.673	'LOADING/1'
21, 22	0.000,	0.000	-39.640,	-46.516	-11.669,	13.531	'LOADING/1'
22, 23	0.000,	0.000	-46.519,	-53.395	13.531,	42.756	'LOADING/1'
25, 26	0.000,	0.000	36.075,	29.199	55.359,	36.267	'LOADING/1'
26, 27	0.000,	0.000	29.196,	22.320	36.266,	21.197	'LOADING/1'
27, 28	0.000,	0.000	22.333,	15.456	21.198,	10.148	'LOADING/1'
30, 31	0.000,	0.000	5.276,	-0.002	1.190,	0.002	'LOADING/1'

'FORCES IN GROUP LINKS/C'

MEMBER	COMPRESSION KN		SHEAR KN		MOMENT KN*M		LOADCASE
23, 44	-43.938,	-43.938	0.000,	0.000	0.000,	0.000	'LOADING/1'
25, 46	-55.750,	-55.750	0.000,	0.000	0.000,	0.000	'LOADING/1'
44, 45	0.000,	0.000	-43.871,	-43.871	0.000,	21.246	'LOADING/1'
45, 46	0.000,	0.000	55.688,	55.688	21.242,	0.004	'LOADING/1'
45, 52	-99.637,	-99.637	0.000,	0.000	0.000,	0.000	'LOADING/1'

'DISPLACEMENTS IN GROUP MEMBERS'

JOINT	XDEF MM	YDEF MM	ZROT RAD	LOADCASE
1	-0.000	9.378	-0.007	'LOADING/1'
2	-0.000	4.754	-0.007	'LOADING/1'
3	-0.000	-0.000	-0.007	'LOADING/1'
4	-0.000	-4.023	-0.007	'LOADING/1'
5	-0.000	-7.710	-0.006	'LOADING/1'
6	-0.053	-9.266	-0.005	'LOADING/1'
7	-0.099	-10.579	-0.004	'LOADING/1'
8	-0.135	-11.642	-0.003	'LOADING/1'
9	-0.163	-12.452	-0.002	'LOADING/1'
10	-0.216	-12.917	-0.002	'LOADING/1'
11	-0.302	-13.255	-0.001	'LOADING/1'
12	-0.340	-13.504	-0.000	'LOADING/1'
13	-0.340	-13.648	-0.000	'LOADING/1'
14	-0.340	-13.880	-0.000	'LOADING/1'
15	-0.340	-13.692	0.000	'LOADING/1'
16	-0.340	-13.071	0.001	'LOADING/1'
17	-0.340	-12.037	0.002	'LOADING/1'
18	-0.340	-10.629	0.003	'LOADING/1'
19	-0.340	-9.333	0.003	'LOADING/1'
20	-0.340	-7.889	0.003	'LOADING/1'
23	-0.340	-1.493	0.003	'LOADING/1'
24	-0.340	-0.085	0.003	'LOADING/1'
25	-0.340	1.166	0.003	'LOADING/1'
28	-0.340	4.491	0.002	'LOADING/1'
29	-0.340	5.650	0.002	'LOADING/1'
30	-0.340	6.392	0.002	'LOADING/1'
21	-0.340	-5.774	0.004	'LOADING/1'
22	-0.340	-3.592	0.004	'LOADING/1'
26	-0.340	2.596	0.002	'LOADING/1'
27	-0.340	3.808	0.002	'LOADING/1'
31	-0.340	7.158	0.002	'LOADING/1'

'DISPLACEMENTS IN GROUP LINKS/C'

JOINT	XDEF MM	YDEF MM	ZROT RAD	LOADCASE
23	-0.340	-1.493	0.003	'LOADING/1'
44	0.000	-1.492	0.003	'LOADING/1'
25	-0.340	1.166	0.003	'LOADING/1'
46	0.000	1.166	0.003	'LOADING/1'
45	0.000	-0.003	0.003	'LOADING/1'
52	0.000	-0.000	0.000	'LOADING/1'

RESULTS FOR SUPPORT AT KING-PIN AND REAR AXLE - LOADING/1 - (CASE 6)
****

NUMBER OF JOINTS = 35
NUMBER OF MEMBERS = 35

NEW NUMBERING SCHEME WITH MAXIMUM
JOINT NUMBER DIFFERENCE OF 3
,FOR INTERNAL USE ONLY,
WILL BE USED BY THE SUBSYSTEM

NUMBER OF SUPPORTS = 2

'REACTIONS IN GROUP SUPPORTS/R'

JOINT	DIRECTION	FORCE KN	MOMENT KN*M	LOADCASE
3	'X'	0.185	0.000	'LOADING/1'
3	'Y'	84.357	0.000	'LOADING/1'
3	'Z'	0.000	0.000	'LOADING/1'
55	'X'	0.000	0.000	'LOADING/1'
55	'Y'	77.040	0.000	'LOADING/1'
55	'Z'	0.000	0.000	'LOADING/1'

'FORCES IN GROUP MEMBERS'

MEMBER	COMPRESSION KN		SHEAR KN		MOMENT KN*M		LOADCASE
1, 2	0.000,	0.000	0.001,	-7.962	0.000,	2.696	'LOADING/1'
2, 3	0.000,	0.000	-7.965,	-15.928	2.697,	10.789	'LOADING/1'
3, 4	0.185,	0.185	68.432,	61.967	10.789,	-25.070	'LOADING/1'
4, 5	0.185,	0.185	61.963,	55.498	-25.073,	-57.371	'LOADING/1'
5, 6	-1.753,	-1.638	55.476,	52.238	-57.371,	-72.199	'LOADING/1'
6, 7	-1.641,	-1.527	52.259,	49.025	-72.195,	-86.125	'LOADING/1'
7, 8	-1.525,	-1.414	49.001,	45.765	-86.121,	-99.164	'LOADING/1'
8, 9	-1.416,	-1.302	45.795,	42.566	-99.160,	-111.317	'LOADING/1'
9, 10	-4.849,	-4.603	42.297,	39.758	-111.267,	-120.329	'LOADING/1'
10, 11	-9.915,	-9.397	38.799,	36.301	-120.204,	-128.767	'LOADING/1'
11, 12	-4.980,	-4.642	37.185,	34.677	-128.767,	-136.517	'LOADING/1'
12, 13	-1.307,	-1.242	34.956,	33.198	-136.603,	-141.603	'LOADING/1'
13, 14	0.000,	0.000	33.128,	26.497	-141.645,	-158.477	'LOADING/1'
14, 15	0.000,	0.000	26.503,	19.872	-158.477,	-171.575	'LOADING/1'
15, 16	0.000,	0.000	19.878,	13.247	-171.571,	-180.923	'LOADING/1'
16, 17	0.000,	0.000	13.253,	6.622	-180.923,	-186.532	'LOADING/1'
17, 18	0.000,	0.000	6.628,	-0.003	-186.532,	-188.407	'LOADING/1'
18, 19	0.000,	0.000	-0.021,	-5.104	-188.379,	-187.317	'LOADING/1'
19, 20	0.000,	0.000	-5.083,	-10.167	-187.317,	-184.004	'LOADING/1'
23, 24	0.000,	0.000	-30.771,	-35.854	-148.055,	-133.629	'LOADING/1'
24, 25	0.000,	0.000	-35.896,	-40.979	-133.653,	-117.032	'LOADING/1'
28, 29	0.000,	0.000	-27.552,	-32.636	-27.047,	-14.032	'LOADING/1'
29, 30	0.000,	0.000	-32.646,	-37.729	-14.028,	1.188	'LOADING/1'
20, 21	0.000,	0.000	-10.124,	-17.001	-184.009,	-176.048	'LOADING/1'
21, 22	0.000,	0.000	-17.062,	-23.938	-176.051,	-164.067	'LOADING/1'
22, 23	0.000,	0.000	-23.874,	-30.751	-164.067,	-148.063	'LOADING/1'
25, 26	0.000,	0.000	-40.937,	-47.813	-117.040,	-91.063	'LOADING/1'
26, 27	0.000,	0.000	-47.824,	-54.700	-91.067,	-61.067	'LOADING/1'
27, 28	0.000,	0.000	-54.730,	-61.606	-61.071,	-27.048	'LOADING/1'
30, 31	0.000,	0.000	5.295,	0.017	1.186,	0.002	'LOADING/1'

'FORCES IN GROUP LINKS/R'

MEMBER		COMPRESSION KN		SHEAR KN		MOMENT KN*M		LOADCASE
28,	47	-33.875,	-33.875	0.000,	0.000	0.000,	0.000	'LOADING/1'
30,	49	-43.000,	-43.000	0.000,	0.000	0.000,	0.000	'LOADING/1'
47,	46	0.000,	0.000	33.875,	-33.875	0.028,	16.375	'LOADING/1'
48,	49	0.000,	0.000	43.188,	43.188	16.563,	-0.047	'LOADING/1'
48,	55	-77.040,	-77.040	0.000,	0.000	0.000,	0.000	'LOADING/1'

'DISPLACEMENTS IN GROUP MEMBERS'

JOINT	XDEF MM	YDEF MM	ZROT RAD	LOADCASE
1	-0.000	25.545	-0.019	'LOADING/1'
2	-0.000	12.837	-0.019	'LOADING/1'
3	-0.000	-0.000	-0.019	'LOADING/1'
4	-0.000	-10.529	-0.019	'LOADING/1'
5	-0.000	-20.386	-0.017	'LOADING/1'
6	-0.153	-24.799	-0.015	'LOADING/1'
7	-0.290	-28.787	-0.014	'LOADING/1'
8	-0.413	-32.332	-0.012	'LOADING/1'
9	-0.520	-35.430	-0.010	'LOADING/1'
10	-0.770	-37.556	-0.009	'LOADING/1'
11	-1.255	-39.449	-0.008	'LOADING/1'
12	-1.487	-41.178	-0.006	'LOADING/1'
13	-1.528	-42.295	-0.007	'LOADING/1'
14	-1.528	-46.011	-0.006	'LOADING/1'
15	-1.528	-48.850	-0.004	'LOADING/1'
16	-1.528	-50.738	-0.002	'LOADING/1'
17	-1.528	-51.623	-0.000	'LOADING/1'
18	-1.528	-51.476	0.001	'LOADING/1'
19	-1.528	-50.655	0.003	'LOADING/1'
20	-1.528	-49.225	0.004	'LOADING/1'
23	-1.528	-37.494	0.009	'LOADING/1'
24	-1.528	-33.291	0.010	'LOADING/1'
25	-1.528	-28.652	0.011	'LOADING/1'
28	-1.528	-6.598	0.013	'LOADING/1'
29	-1.528	-0.728	0.014	'LOADING/1'
30	-1.528	5.187	0.014	'LOADING/1'
21	-1.528	-46.339	0.006	'LOADING/1'
22	-1.528	-42.405	0.008	'LOADING/1'
26	-1.528	-21.782	0.012	'LOADING/1'
27	-1.528	-14.371	0.013	'LOADING/1'
31	-1.528	11.333	0.014	'LOADING/1'

'DISPLACEMENTS IN GROUP LINKS/R'

JOINT	XDEF MM	YDEF MM	ZROT RAD	LOADCASE
28	-1.528	-6.598	0.013	'LOADING/1'
47	0.000	-6.598	0.014	'LOADING/1'
30	-1.528	5.187	0.014	'LOADING/1'
49	0.000	5.187	0.014	'LOADING/1'
48	0.000	-0.002	0.014	'LOADING/1'
55	0.000	-0.000	0.000	'LOADING/1'

RESULTS FOR SUPPORT AT KING-PIN AND FRONT & CENTRE AXLE - LOADING/1 - (CASE 7)
****

NUMBER OF JOINTS = 41
NUMBER OF MEMBERS = 43

NEW NUMBERING SCHEME WITH MAXIMUM
JOINT NUMBER DIFFERENCE OF 4
FOR INTERNAL USE ONLY,
WILL BE USED BY THE SUBSYSTEM

NUMBER OF SUPPORTS = 2

'REACTIONS IN GROUP SUPPORTS/FC'

JOINT	DIRECTION	FORCE KN	MOMENT KN*M	LOADCASE
3	'X'	0.011	0.000	'LOADING/1'
3	'Y'	44.606	0.000	'LOADING/1'
3	'Z'	0.000	0.000	'LOADING/1'
53	'X'	0.000	0.000	'LOADING/1'
53	'Y'	116.769	0.000	'LOADING/1'
53	'Z'	0.000	0.000	'LOADING/1'

'FORCES IN GROUP MEMBERS'

MEMBER	COMPRESSION KN		SHEAR KN		MOMENT KN*M		LOADCASE
1, 2	0.000,	0.000	-0.000,	-7.964	0.000,	2.698	'LOADING/1'
2, 3	0.000,	0.000	-7.964,	-15.927	2.698,	10.790	'LOADING/1'
3, 4	0.011,	0.011	28.679,	22.214	10.790,	-3.205	'LOADING/1'
4, 5	0.011,	0.011	22.214,	15.749	-3.205,	-13.645	'LOADING/1'
5, 6	-0.539,	-0.426	15.740,	12.509	-13.645,	-17.532	'LOADING/1'
6, 7	-0.426,	-0.313	12.513,	9.280	-17.532,	-20.530	'LOADING/1'
7, 8	-0.314,	-0.200	9.283,	6.053	-20.530,	-22.638	'LOADING/1'
8, 9	-0.200,	-0.087	6.055,	2.825	-22.638,	-23.859	'LOADING/1'
9, 10	-0.322,	-0.025	2.800,	0.271	-23.860,	-24.192	'LOADING/1'
10, 11	-0.061,	0.570	0.274,	-2.201	-24.196,	-23.977	'LOADING/1'
11, 12	0.302,	0.641	-2.284,	-4.748	-23.977,	-23.212	'LOADING/1'
12, 13	0.180,	0.246	-4.811,	-6.562	-23.209,	-22.361	'LOADING/1'
13, 14	0.000,	0.000	-6.571,	-13.203	-22.361,	-16.781	'LOADING/1'
14, 15	0.000,	0.000	-13.203,	-19.835	-16.782,	-7.462	'LOADING/1'
15, 16	0.000,	0.000	-19.835,	-26.467	-7.462,	5.600	'LOADING/1'
16, 17	0.000,	0.000	-26.468,	-33.099	5.600,	22.403	'LOADING/1'
17, 18	0.000,	0.000	-33.099,	-39.731	22.403,	42.948	'LOADING/1'
18, 19	0.000,	0.000	-14.013,	-19.097	42.948,	50.108	'LOADING/1'
19, 20	0.000,	0.000	-19.095,	-24.179	50.108,	59.467	'LOADING/1'
23, 24	0.000,	0.000	13.557,	8.474	62.678,	57.913	'LOADING/1'
24, 25	0.000,	0.000	8.479,	3.396	57.911,	55.352	'LOADING/1'
28, 29	0.000,	0.000	15.479,	10.396	10.144,	4.562	'LOADING/1'
29, 30	0.000,	0.000	10.354,	5.271	4.570,	1.183	'LOADING/1'
20, 21	0.000,	0.000	8.481,	1.605	59.467,	56.514	'LOADING/1'
21, 22	0.000,	0.000	1.610,	-5.266	56.514,	57.584	'LOADING/1'
22, 23	0.000,	0.000	-5.268,	-12.144	57.584,	62.678	'LOADING/1'
25, 26	0.000,	0.000	36.067,	29.191	55.346,	36.260	'LOADING/1'
26, 27	0.000,	0.000	29.200,	22.324	36.257,	21.191	'LOADING/1'
27, 28	0.000,	0.000	22.313,	15.437	21.187,	10.148	'LOADING/1'
30, 31	0.000,	0.000	5.264,	-0.014	1.182,	-0.002	'LOADING/1'

'FORCES IN GROUP LINKS/FC'

MEMBER	COMPRESSION KN		SHEAR KN		MOMENT KN*M	LOADCASE
18, 41	-25.750,	-25.750	0.000,	0.000	0.000,	0.000 'LOADING/1'
20, 43	-32.625,	-32.625	0.000,	0.000	0.000,	0.000 'LOADING/1'
23, 44	-25.711,	-25.711	0.000,	0.000	0.000,	0.000 'LOADING/1'
25, 46	-32.688,	-32.688	0.000,	0.000	0.000,	0.000 'LOADING/1'
41, 42	0.000,	0.000	-25.688,	-25.688	0.000,	12.449 'LOADING/1'
44, 45	0.000,	0.000	-25.684,	-25.684	0.008,	12.434 'LOADING/1'
42, 43	0.000,	0.000	32.688,	32.688	12.449,	-0.004 'LOADING/1'
45, 46	0.000,	0.000	32.688,	32.688	12.441,	0.004 'LOADING/1'
50, 51	0.000,	0.000	-58.388,	-58.388	0.000,	76.483 'LOADING/1'
51, 52	0.000,	0.000	58.382,	58.382	76.483,	0.000 'LOADING/1'
42, 50	-58.375,	-58.375	0.000,	0.000	0.000,	0.000 'LOADING/1'
45, 52	-58.438,	-58.438	0.000,	0.000	0.000,	0.000 'LOADING/1'
51, 53	-116.769,	-116.769	0.000,	0.000	0.000,	0.000 'LOADING/1'

'DISPLACEMENTS IN GROUP MEMBERS'

JOINT	XDEF MM	YDEF MM	ZROT RAD	LOADCASE
1	-0.000	1.608	-0.001	'LOADING/1'
2	-0.000	0.869	-0.001	'LOADING/1'
3	-0.000	-0.000	-0.002	'LOADING/1'
4	-0.000	-0.913	-0.002	'LOADING/1'
5	-0.000	-1.746	-0.001	'LOADING/1'
6	-0.010	-2.044	-0.000	'LOADING/1'
7	-0.017	-2.240	-0.000	'LOADING/1'
8	-0.020	-2.330	-0.000	'LOADING/1'
9	-0.019	-2.318	0.000	'LOADING/1'
10	-0.009	-2.241	0.000	'LOADING/1'
11	0.023	-2.116	0.000	'LOADING/1'
12	0.043	-1.961	0.000	'LOADING/1'
13	0.048	-1.842	0.000	'LOADING/1'
14	0.048	-1.318	0.001	'LOADING/1'
15	0.048	-0.702	0.001	'LOADING/1'
16	0.048	-0.046	0.001	'LOADING/1'
17	0.048	0.577	0.001	'LOADING/1'
18	0.048	1.074	0.000	'LOADING/1'
19	0.048	1.305	0.000	'LOADING/1'
20	0.048	1.372	-0.000	'LOADING/1'
23	0.048	-0.271	-0.002	'LOADING/1'
24	0.048	-1.163	-0.002	'LOADING/1'
25	0.048	-2.245	-0.003	'LOADING/1'
28	0.048	-8.004	-0.004	'LOADING/1'
29	0.048	-9.584	-0.004	'LOADING/1'
30	0.048	-11.179	-0.004	'LOADING/1'
21	0.048	1.166	-0.000	'LOADING/1'
22	0.048	0.620	-0.001	'LOADING/1'
26	0.048	-3.976	-0.003	'LOADING/1'
27	0.048	-5.926	-0.003	'LOADING/1'
31	0.048	-12.839	-0.004	'LOADING/1'

'DISPLACEMENTS IN GROUP LINKS/FC'

JOINT	XDEF MM	YDEF MM	ZROT RAD	LOADCASE
18	0.048	1.074	0.000	'LOADING/1'
41	0.000	1.074	0.000	'LOADING/1'
20	0.048	1.372	-0.000	'LOADING/1'
43	0.000	1.373	0.000	'LOADING/1'
23	0.048	-0.271	-0.002	'LOADING/1'

```
      44      0.000     -0.271     -0.002 'LOADING/1'
      25      0.048     -2.245     -0.003 'LOADING/1'
      46      0.000     -2.245     -0.002 'LOADING/1'
      42      0.000      1.242      0.000 'LOADING/1'
      45      0.000     -1.374     -0.002 'LOADING/1'

      50      0.000      1.242     -0.000 'LOADING/1'
      51      0.000     -0.003     -0.000 'LOADING/1'
      52      0.000     -1.374     -0.001 'LOADING/1'
      53      0.000     -0.000      0.000 'LOADING/1'

*FINISH



STATISTICS**********

SUBSYSTEM USED =FRAME-ANALYSIS/2

0243   LINES INPUT FROM READER
1438   LINES WRITTEN TO PRINTER
3867  BLOCKS READ FROM WORK-FILE
0926  BLOCKS WRITTEN TO WORK-FILE
0489  STORAGE REORGANISATIONS
0256  WORD WORK-FILE BLOCKSIZE

*EXIT
```

APPENDIX C

STRESS ANALYSIS OF CHASSIS SUB-STRUCTURE

C.1 Introduction

This appendix details the design calculations relating to the semi-trailer chassis sub-structure. The term chassis sub-structure refers to those portions of the chassis which contribute to the load bearing ability of the complete structure.

C.2 Side rails and outriggers

The stresses in the outrigger-side rail structure are analysed for the semi-trailer subject to loads during loading and unloading operations (eg. forklift truck tyre loads). The ISO container floor test load[48] is used as a representative maximum load.

ISO 1496/1 - 1978(E)[48] specifies maximum vertical loads as follows:

- 5 460 kg over two tyres (eg. front tyres of a forklift truck).
- Tyre centres at 760 mm.

The worst case for loading on the side rails and outriggers occurs when the the two tyre loads are applied on the deck directly above the side rail (Figure C1). This situation corresponds to a forklift truck or similar vehicle travelling transversely across the trailer deck at the point where the front tyres are directly above the side rail. A proportion of the 5460 kg total load is supported by the transversely mounted deck planks and the remainder by the outrigger structure.

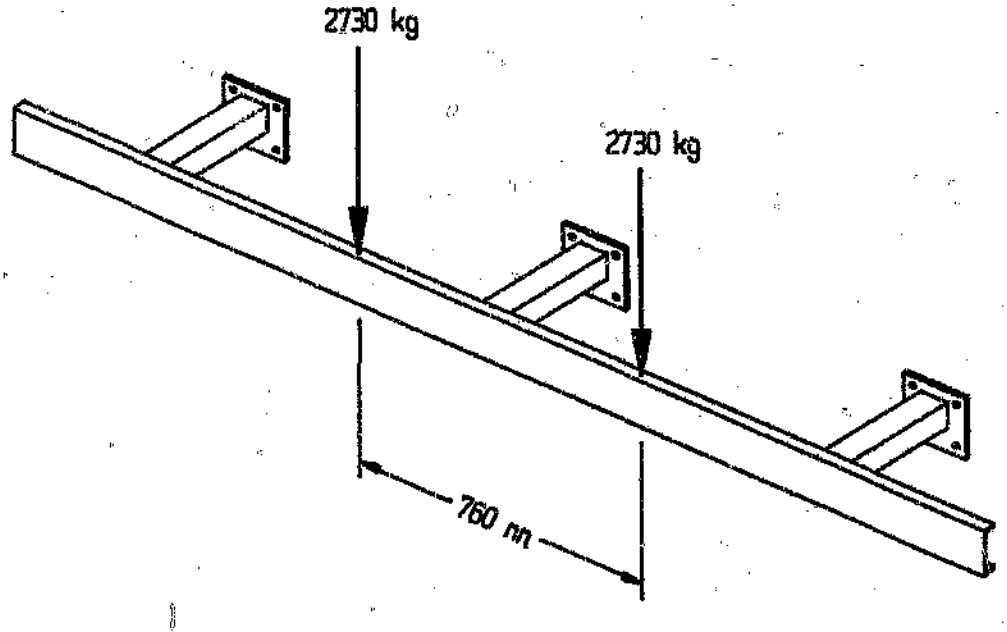

Figure C2 Typical loading configuration on portion of the side rail

In the following analysis the side rail is considered as a continuous beam supported over its full length on multiple elastic supports. The supports are positioned at each outrigger or end rail location, as well as midway between each pair of outriggers (refer Figure C7). Each support is considered as being made up of a combination of an outrigger and the series of deck planks immediately adjacent to the support position, or the series of deck planks alone, as the case may be. This is detailed further in Section C.2.3. Both the outrigger and cantilevered deck planks will have a certain flexibility or stiffness, and the total stiffness of each elastic support is then the sum of the individual outrigger and deck stiffnesses at that position. The proportions of a particular support reaction carried by the outrigger structure and

deck planks, respectively, are then determined relative to the outrigger and deck stiffnesses at that support. The resultant stresses in the outriggers are analysed in Section C.2.5, whilst those in the deck planks are analysed in Section C.3.

A beam analysis computer program, developed by the author at Henred Fruehauf Trailers (Pty) Ltd, and based on the 3-Moment equation for continuous beams, is used in all of the following analyses except Section C.2.1, where the complexity of the structure prevents its use. This program calculates the bending moments, support reactions and deflections at up to 26 nodes along the length of the continuous beam. Each of these nodes may be either a support node or a free node. A finite support flexibility is entered for a flexible support, whereas rigid supports have flexibilities of zero. Very high flexibilities (eg. 10^6 mm/N) are entered at free nodes.

C.2.1 Calculation of outrigger flexibility

The outrigger-torsion tube structure is as shown below.

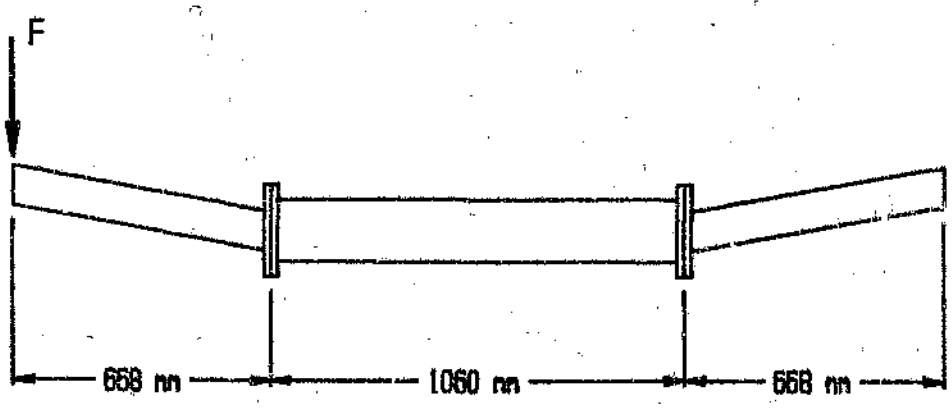

Figure C2 Outrigger/torsion tube structure

Considering the centre section of the structure on its own (ie. torsion tube only), loaded at the left hand end by a moment Fd, the free body diagram, bending moment and deflection diagrams are as shown in Figure C3.

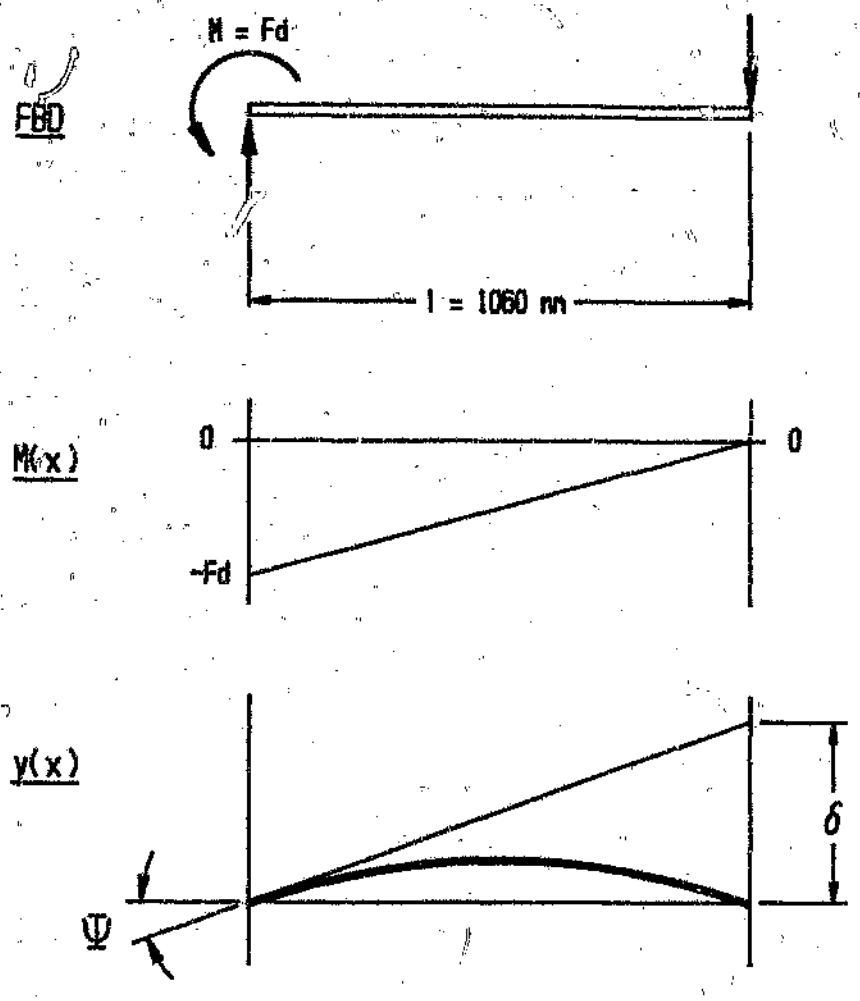

Figure C3 Loading and deflection diagrams for a torsion tube loaded via an outrigger

Applying the Moment-Area theorem[30,43] to this span:

$$\delta = \left(\frac{Fd\ell}{2}\right)\left(\frac{2\ell}{3}\right)\left(\frac{1}{EI_t}\right)$$

$$= \frac{Fd\ell^2}{3EI_t}$$

where I_t is the second moment of area of the torsion tube.

For Ψ small, $\Psi \approx \frac{\delta}{\ell}$ and hence

$$\Psi = \frac{FD\ell}{3EI_t}$$

Since the slope of the outriggers is always small (ie. maximum slope is 9,88°), the outrigger is assumed horizontal. The deflected shape of the outrigger/torsion tube structure is shown in Figure C4.

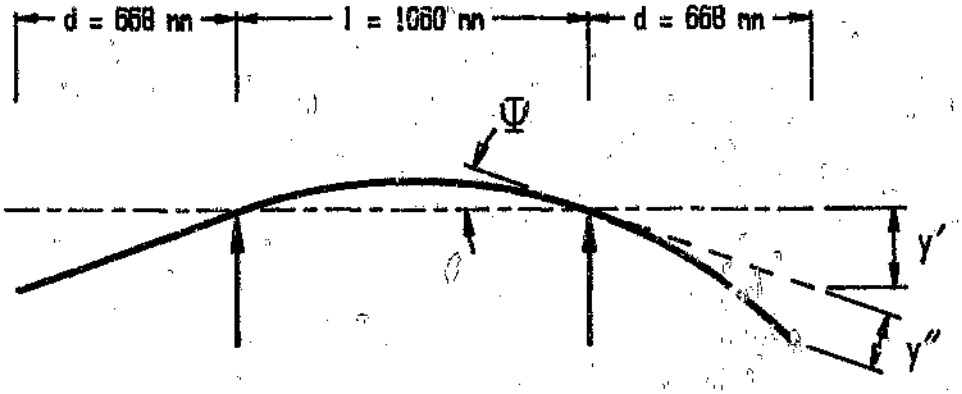

Figure C4 Deflected outrigger/torsion tube structure

The deflection of the loaded end of the outrigger is then calculated as follows:

y' = deflection due to rotation Ψ

$\approx \Psi d$, for Ψ small

$$= \frac{Fd^2\ell}{3EI_t}$$

y'' = deflection of cantilevered outrigger

$$= \frac{Fd^3}{3EI_0} \qquad \text{(standard solutions}^{(43)}\text{)}$$

where I_0 is the second moment of area of the outrigger.

For small deflections y'' is assumed vertical and the total deflection at the load is:

$$y = y' + y''$$

$$= \frac{Fd^2\ell}{3EI_t} + \frac{Fd^3}{3EI_0}$$

$$= \frac{Fd^2}{3E}\left(\frac{\ell}{I_t} + \frac{d}{I_0}\right)$$

Hence the flexibility of the outrigger/torsion tube structure for a load applied to the end of one of the outriggers is:

$$f_{OR} = y/F$$

$$= \frac{d^2}{3E}\left(\frac{\ell}{I_t} + \frac{d}{I_0}\right)$$

where

$I_t = 8,619 \times 10^6 \text{ mm}^4$

$I_0 = 3,336 \times 10^6 \text{ mm}^4$

$E = 69 \times 10^3 \text{ MPa}$ (refer Appendix E)

Whence:

$f_{OR} = 6,968 \times 10^{-4} \text{ mm/N}$

or, in terms of stiffness

$$k_{OR} = \frac{1}{f}$$

$$= 1435 \text{ N/mm}$$

A similar analysis to the above was also applied to the upper coupler cross-member and outrigger structure. In this case length ℓ is made up of the upper coupler cross-member and a 150 mm wide strip of rubbing plate (refer Figure C5).

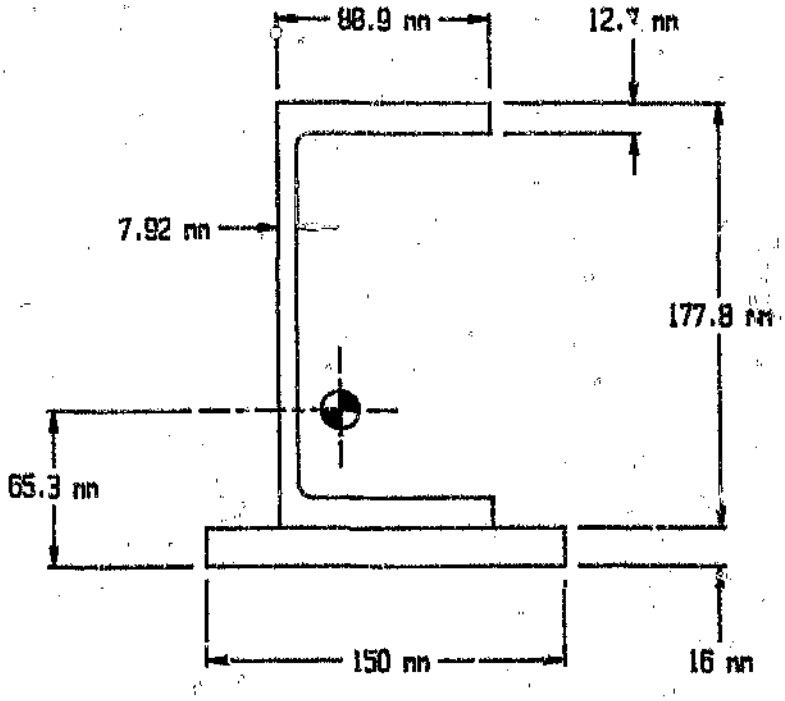

Figure C5 Combined cross-member/rubbing plate section

The second moment of area term I_t in the flexibility equation is replaced by the second moment of area of the combined upper coupler cross-member/plate section, ie:

$$I_c = 3,112 \times 10^7 \text{ mm}^4$$

For the upper coupler outrigger, the second moment of area term is:

$$I_0 = 8,673 \times 10^6 \text{ mm}^4$$

Hence, the flexibility and stiffness of the upper coupler outrigger for a load applied to its end are, respectively:

$f_{OR} = 2.395 \times 10^{-4}$ mm/N

$k_{OR} = 4176$ N/mm

C.2.2 Calculation of deck plank flexibility

The deck planks are supported over the full 200 mm width of the two main chassis I-beam top flanges and are firmly clamped on both the inner and outer edges of the flanges. This is modelled as shown in Figure C6.

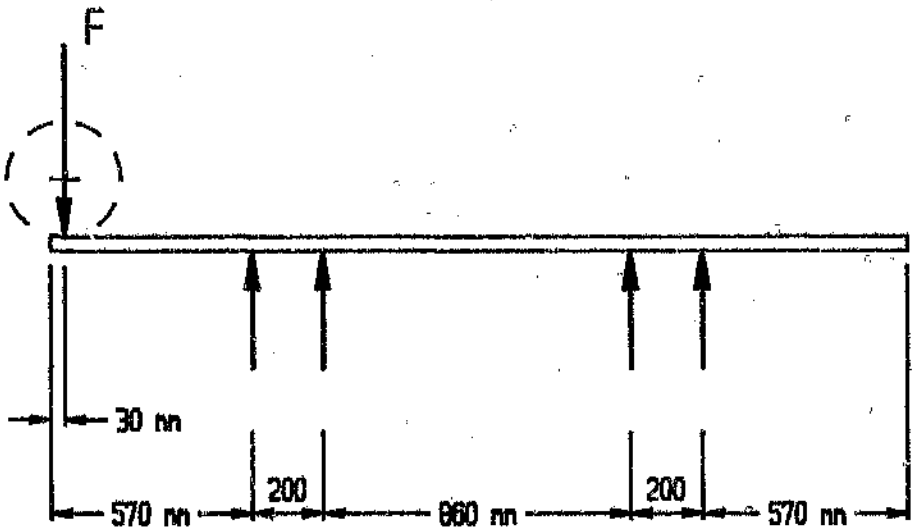

Figure C6 Loading diagram for deck plank loaded at side rail

The forklift tyre is positioned with the outer edge of the footprint area level with the end of the deck plank. The resultant load is approximately 30 mm from the end of the plank.

The beam analysis program discussed above was used to calculate the flexibility of the deck plank for a load positioned as shown in Figure C6. All four supports were entered as rigid supports and a unit force was entered for

force F. The resultant flexibility per deck plank is:

$$f_D = 1,658 \times 10^{-3} \text{ mm/N}$$

that is

$$k_D = 603,2 \text{ N/mm}$$

($I_D = 6,568 \times 10^3$ mm^4 – refer Section C.3)

C.2.3 Continuous beam analysis of side rail/outrigger structure

Three load cases are considered in this analysis. These are:

Load case 1 – Here the two loads are positioned on the side rail symmetrically arranged about the midspan node between two outrigger nodes. This situation results in maximum stress in the side rail.

Load case 2 and 3 – Here the two tyre loads are positioned on the side rail with each load an equal distance on each side of a square tube or upper coupler outrigger, respectively. These two loading conditions result in maximum load (and hence, maximum stress) on the outrigger under consideration.

In applying the beam analysis computer program, support nodes are positioned at the front and rear end rails, as well as at each outrigger position along the length of the beam and midway between the outriggers. These positions are detailed in Figure C7. The deck flexibility at each node is obtained by combining the deck plank flexibilities for half the span on either side of the node. Outrigger support flexibilities are then derived by combining this deck flexibility with the respective outrigger flexibility. The front

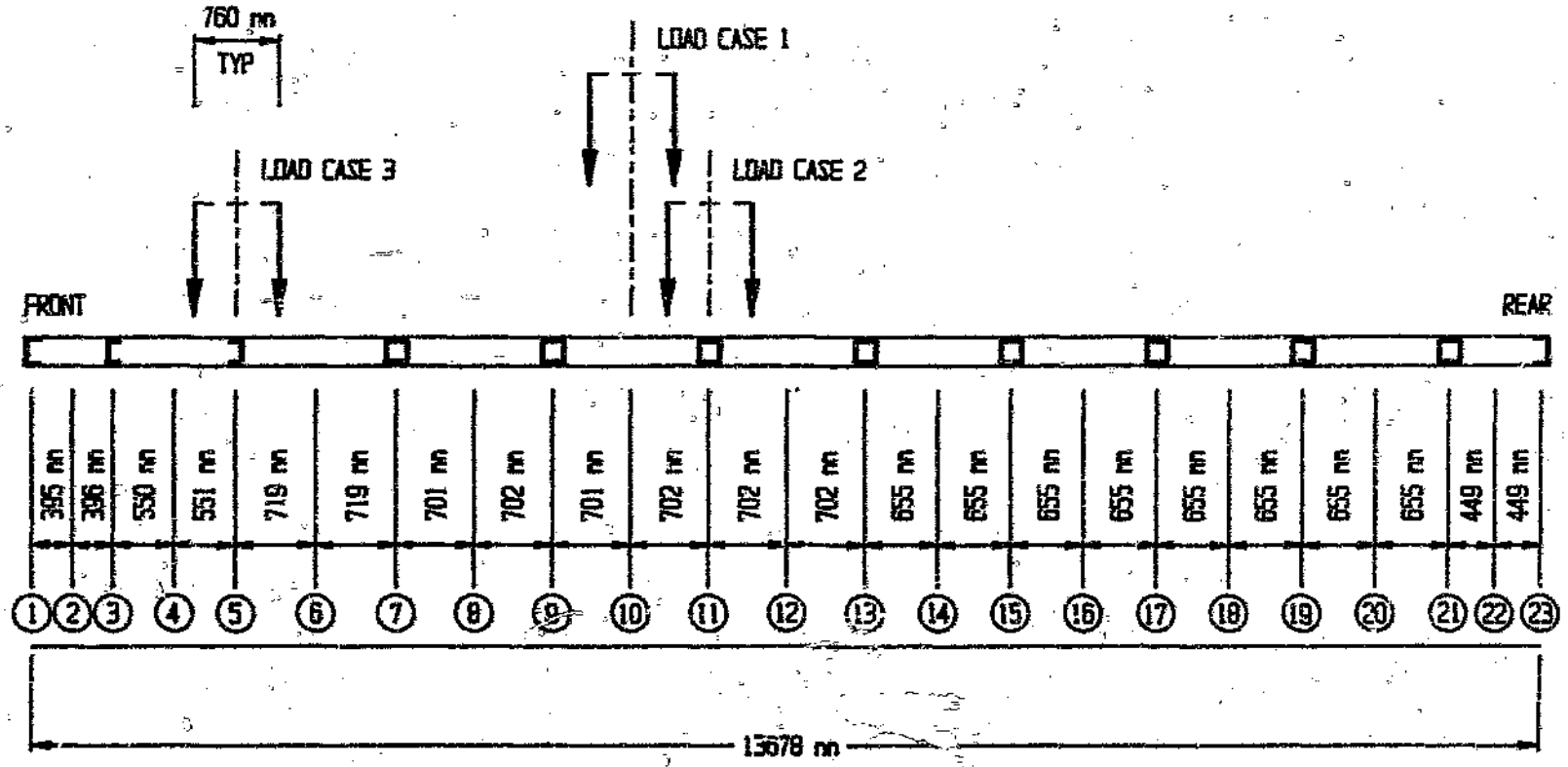

Figure C7 Support node positions for the analysis of the outrigger/side rail structure

and rear end rails are entered as rigid supports, due to the stiffening effect of the headboard and light boxes. Free nodes (ie. very high relative flexibility) are positioned at the points of application of the forklift tyre loads.

The support flexibilities for the 23 support nodes are tabulated in Table C1, and the most severe loading positions for each of the three load cases are indicated in Figure C7.

Tables C2 to C4 present results for bending moment, support reaction and deflection at each node. The support reactions and deflections are positive in the upward direction, while the sign convention for bending moment values is indicated in Figure C8.

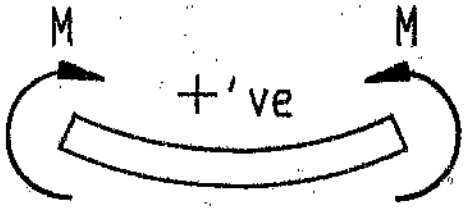

Figure C8 Bending moment sign convention for continuous beam program

Maximum bending moment in the side rail and maximum side rail deflection occur for load case 1. The results for this loadcase are presented in graphical form in Graphs 4.36 to 4.38 in Section 4.4.1.

Table C1 Support node flexibilities for the outrigger/side rail analysis

Support node	Support flexibility (mm/N × 10^4)	No. of deck planks included in calculation of flexibility
1	0,000	—
2	8,373	1,98
3	1,784	2,37
4	6,029	2,75
5	1,642	3,18
6	4,605	3,60
7	2,796	3,55
8	4,723	3,51
9	2,815	3,51
10	4,723	3,51
11	2,815	3,51
12	4,723	3,51
13	2,874	3,39
14	5,055	3,28
15	2,929	3,28
16	5,055	3,28
17	2,929	3,28
18	5,055	3,28
19	2,929	3,28
20	5,055	3,28
21	3,226	2,76
22	7,368	2,25
23	0,000	—

Table C2 Bending moment, reaction and deflection results for the side rail for load case 1

Support node	Bending moment (Nm)	Support reaction (N)	Nodal deflection (mm)
1	0,0	94,9	0,00
2	37,5	1,5	−0,00
3	75,6	−39,4	0,01
4	106,9	−83,9	0,05
5	92,0	−869,8	0,14
6	−552,8	−527,4	0,24
7	−1576,9	612,3	−0,17
8	−2146,2	3765,0	−1,78
9	−72,9	16852,1	−4,74
load	6285,0	–	−6,07
10	3634,7	13969,2	−6,60
load	6292,4	–	−6,07
11	−79,1	16852,0	−4,74
12	−2138,7	3770,0	−1,78
13	−1552,1	582,0	−0,17
14	−623,6	−511,9	0,26
15	−30,3	−730,8	0,21
16	84,4	−184,2	0,09
17	78,4	−57,0	0,02
18	35,1	19,2	−0,01
19	4,4	35,4	−0,01
20	−3,2	10,5	−0,01
21	−3,8	5,0	0,00
22	−2,1	0,7	0,00
23	0,0	−4,6	0,00

Table C3 Bending moment, reaction and deflection results for the side rail for load case 2

Support node	Bending moment (Nm)	Support reaction (N)	Nodal deflection (mm)
1	0,0	35,0	0,00
2	13,9	7,6	−0,01
3	30,7	50,9	−0,01
4	82,2	−5,4	0,00
5	130,8	−315,0	0,06
6	−32,3	−417,9	0,19
7	−495,8	−932,1	0,26
8	−1601,1	327,5	−0,15
9	−2478,2	6443,0	−1,81
10	1162,2	10248,1	−4,84
load	6134,3	–	−6,00
11	1825,1	22690,0	−6,39
load	6137,9	–	−6,01
12	1168,8	10270,9	−4,85
13	−2454,4	6345,0	−1,82
14	−1678,8	440,4	−0,22
15	−614,7	−849,4	0,25
16	−107,0	−455,3	0,23
17	102,5	−351,4	0,10
18	81,8	39,8	0,02
19	35,2	30,8	−0,01
20	8,7	22,7	−0,01
21	−2,9	19,1	−0,01
22	−2,3	3,7	0,00
23	0,0	−5,1	0,00

Table C4 Bending moment, reaction and deflection results for the side rail for load case 3

Support node	Bending moment (Nm)	Support reaction (N)	Nodal deflection (mm)
1	0,0	−2957,0	0,00
2	−1167,9	899,9	−0,75
3	−1982,3	10030,1	−1,79
4	2403,1	6064,6	−3,66
load	4803,6	–	−4,09
5	−39,0	27225,0	−4,47
load	5464,2	–	−4,46
6	1294,7	8018,4	−3,69
7	−1783,4	5104,0	−1,43
8	−1206,2	334,4	−0,16
9	−393,3	−658,5	0,19
10	−43,2	−327,3	0,16
11	77,6	−209,8	0,06
12	51,1	−12,1	0,01
13	16,2	28,3	−0,01
14	2,1	13,3	−0,01
15	−3,3	9,6	0,00
16	−2,4	0,9	0,00
17	−1,0	−1,1	0,00
18	−0,2	−0,6	0,00
19	0,1	−0,5	0,00
20	0,1	−0,1	0,00
21	0,1	0,0	0,00
22	0,0	0,0	0,00
23	0,0	0,1	0,00

C.2.4 Maximum stress in side rail

Maximum bending moment on the side rail occurs at the position of the applied loads for load case 1, ie:

$$M_{max} = 6292,4 \text{ Nm}$$

The second moment of area and maximum distance to extreme fibres for the side rail are:

$$I = 8,976 \times 10^6 \text{ mm}^4$$

$$y_{max} = 88,9 \text{ mm}$$

Whence the extreme fibre bending stress is:

$$\sigma_b = \frac{M_{max} \cdot y_{max}}{I}$$

$$= \frac{(6292,4 \times 10^3)(88,9)}{(8,976 \times 10^6)}$$

$$= 62,32 \text{ MPa}$$

Shear stress is zero at extreme fibres, and hence:

$$\sigma_1 = \sigma_b$$

Applying the Von Mises failure criterion ($\sigma_2 = \sigma_3 = 0$):

$$2{\sigma_1}^2 \leq 2{\sigma_{yt}}^2$$

that is

$$\sigma_m = \sigma_1 = 62,32 \text{ MPa} < \sigma_{yt}$$

where σ_{yt} = 255 MPa for the D65S-TF aluminium alloy (refer Section E.1.3).

C.2.5 Maximum stress in outriggers

The maximum support reaction at a square tube type outrigger position is found to occur for the two tyre loads positioned as indicated for load case 2, ie. maximum support reaction is:

$R_{11} = 22\,690$ N (Node 11, Table C3)

As previously discussed, the proportion of the support reaction which is carried by the outrigger is determined proportionally to the outrigger stiffness, ie:

$$P_{OR} = R_{11}\left(\frac{k_{OR}}{k_{11}}\right)$$

where

k_{OR} = stiffness of the square tube outrigger
k_{11} = support stiffness of node 11 (Table C1)

Alternatively, in terms of flexibilities:

$$P_{OR} = R_{11}\left(\frac{f_{11}}{f_{OR}}\right)$$

$$= (22\,690)\left(\frac{2{,}815 \times 10^{-4}}{6{,}968 \times 10^{-4}}\right)$$

$$= 9\,166 \text{ N}$$

Maximum bending stress occurs at the extreme fibres of the outrigger tube section immediately adjacent to the outrigger flange weld. The moment at this position is:

$$M = (9\,166)(668 - 21)$$

$$= 5,930 \times 10^6 \text{ Nmm}$$

Hence:

$$\sigma_b = \frac{(5,930 \times 10^6)(50)}{(3.336 \times 10^6)}$$

$$= 88,89 \text{ MPa}$$

Further, since shear stress is zero at extreme fibres:

$$\sigma_1 = \sigma_b$$

The Von Mises failure criterion then reduces to:

$$2{\sigma_1}^2 \leq 2{\sigma_{yt}}^2$$

that is

$$\sigma_m = \sigma_1 = 88,89 \text{ MPa} < \sigma_{yt}$$

where $\sigma_{yt} = \sigma_{0,2} = 110$ MPa for D655-TF aluminium alloy in the as welded condition (refer Section E.1.3).

Maximum support reaction at an upper coupler outrigger position, on the other hand, occurs for the two tyre loads positioned as indicated for load case 3. In this case the maximum support reaction is:

$R_5 = 27\,225$ N (Node 5, Table C4)

A similar analysis to that detailed above was completed for the upper coupler outrigger. The main results are:

$P_{OR} = 18\,460$ N

$\sigma_b = 106,7$ MPa (extreme fibres)

$= \sigma_1$ ($\tau = 0$)

The Von Mises failure criterion then yields ($\sigma_2 = \sigma_3 = 0$):

$2{\sigma_1}^2 \leq 2{\sigma_{yt}}^2$

that is

$\sigma_m = \sigma_1 = 106,7$ MPa $< \sigma_{yt}$

where $\sigma_{yt} = \sigma_{0,2} = 110$ MPa for D655-TF aluminium alloy in the as welded condition (refer Section E.1.3).

C.3 Deck Planks

The extruded aluminium deck planks are rated as being able to carry a forklift truck of maximum 3 500 kg GVM.[49]

In this section this value is checked for a single point load applied on a deck plank midway between the main chassis beams. The stresses in the deck planks as a result of the loading detailed in Section C.2 and Figure C6 are also analysed.

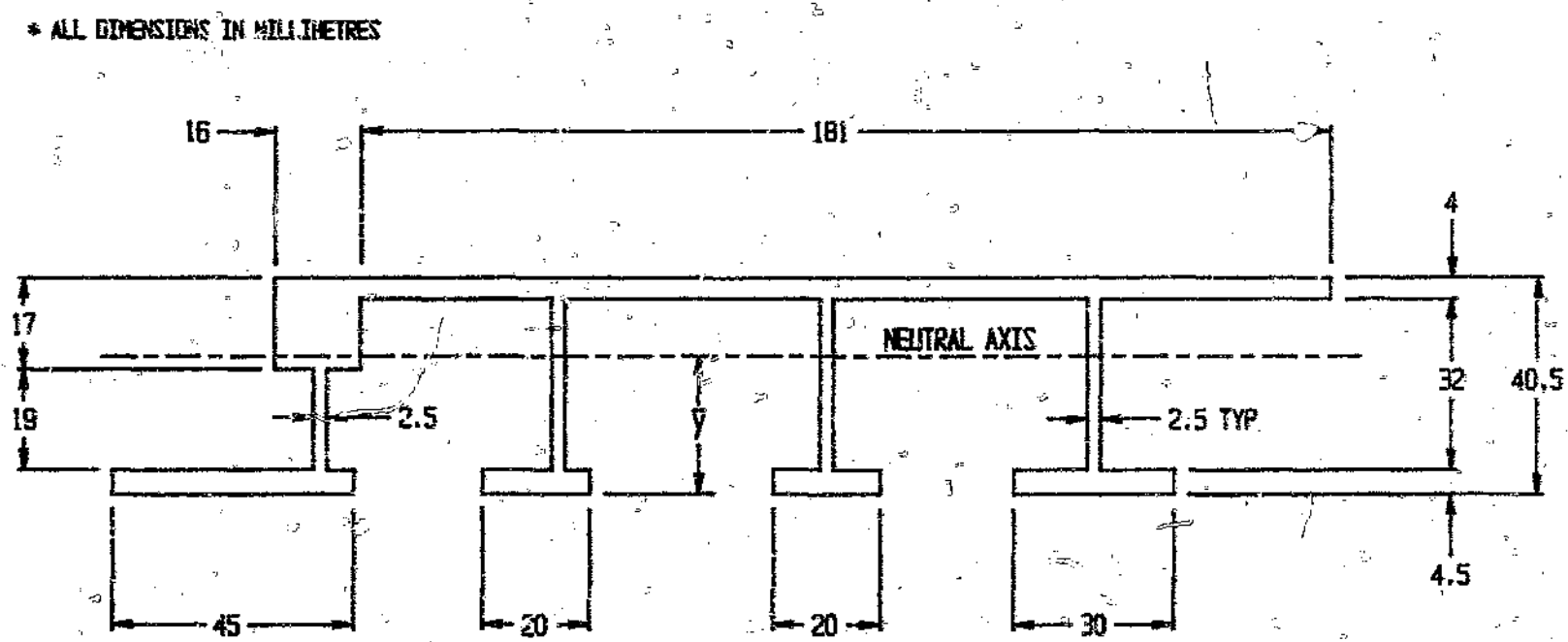

Figure C9 Approximated deck plank section

The position of the neutral axis (ie. centroid) and the second moment of area for the deck plank section are calculated for the approximated section shown in Figure C9. These results are:

$$\bar{y} = 24,06 \text{ mm}$$

$$I_D = 6,568 \times 10^5 \text{ mm}^4$$

C.3.1 Stress in the deck plank for a single point load midway between the main chassis beams

The free body diagram for this loading situation is shown in Figure C10.

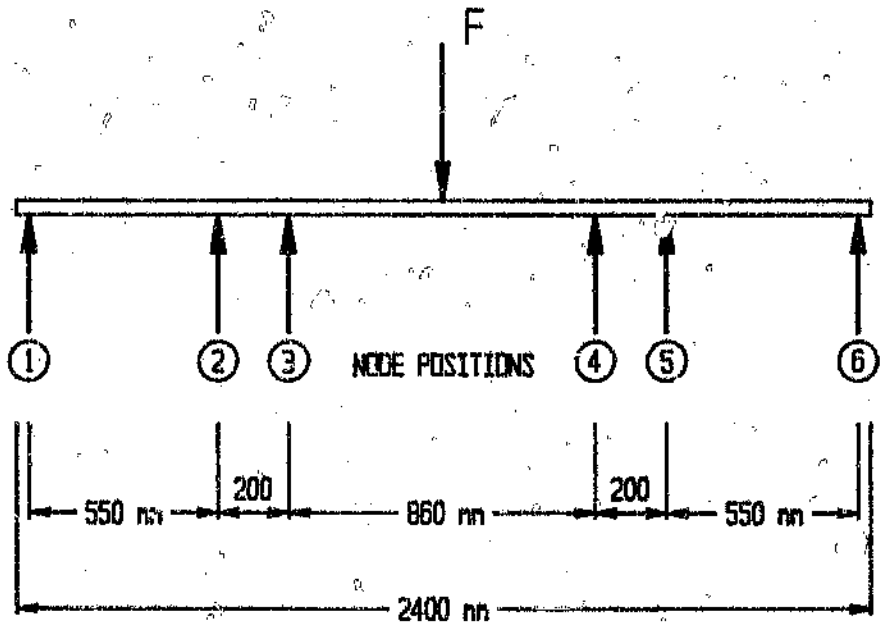

Figure C10 FBD of deck plank loaded at centre

The beam analysis program discussed in Section C.2 is used here since the

solution is statically indeterminate.

For the purpose of this analysis, Force F is entered as a 1 000 kg (9810 N) load. The maximum load that can be carried by the deck plank is then deduced by comparing the maximum stress resulting from the 1 000 kg load to the yield strength ($\sigma_{0,2}$) for the Anticorodal aluminium alloy. All six supports are assumed rigid.

Table C5 presents bending moment results for the deck plank.

Table C5 Bending moment distribution for deck plank loaded at centre

Support node	Bending moment (Nmm)
1	0
2	122 835
3	−921 265
load	1 187 885
4	−921 265
5	122 835
6	0

Maximum bending moment occurs at the point of application of load F and results in an extreme fibre bending stress of:

$$\sigma_b = \frac{(1\,187\,885)(24,06)}{(6,568 \times 10^5)}$$

$$= 43,51 \text{ MPa}$$

Since $\sigma_a = 0$ at the extreme fibres, the maximum principal stress is:

$$\sigma_1 = \sigma_b$$
$$= 43,51 \text{ MPa}$$

Further, since $\sigma_2 = \sigma_3 = 0$, the Von Mises failure stress is equal to this maximum principal stress, ie:

$$\sigma_m = 43,51 \text{ MPa}$$

The 0,2% proof stress for the Anticorodal - 100 aluminium alloy is 260 MPa (refer Section E.1.2). Hence, the maximum value for load F is:

$$F_{max} = (1\,000 \text{ kg})\left(\frac{260}{43,51}\right)$$
$$= 5\,976 \text{ kg}$$

This is obviously far in excess of the front tyre load from a 3 500 GVM forklift truck.

For the 2 730 kg, ISO 1496/1 - 1978(E) forklift truck tyre load[48] (refer Section C.2) the Von Mises stress is:

$$\sigma_m = 118,8 \text{ MPa}$$

C.3.2 Stress in the deck plank for loading at the side rail

The greatest load imposed on a section of deck for the loading detailed in Section C.2 is found to occur for those deck planks corresponding to node 11

in load case 2.

The support reaction at node 11 for load case 2 is (refer Table C3):

$$R_{11} = 22\,690 \text{ N}$$

and the proportion of this load supported by the outrigger is (refer Section C.2.5)

$$P_{OR} = 9\,166 \text{ N}$$

Hence, the load carried by the deck is:

$$P_D = 13\,524 \text{ N}$$

This section of deck corresponds to 3,51 deck planks (refer Table C1). The load per deck plank is then:

$$F = 3\,853 \text{ N}$$

Referring to Figure C6, the bending moment at the outer edge of the main chassis beam flange is:

$$\begin{aligned} M &= (3\,853)(570 - 30) \\ &= 2\,080\,620 \text{ Nmm} \end{aligned}$$

which results in an extreme fibre bending stress of

$$\sigma_b = \frac{(2\,080\,620)(24,06)}{(6,568 \times 10^5)}$$

$$= 76,22 \text{ MPa}$$

$\sigma_1 = \sigma_b$ at the extreme fibres and $\sigma_2 = \sigma_3 = 0$. The Von Mises failure criterion then reduces to:

$$2{\sigma_1}^2 \leq 2{\sigma_{yt}}^2$$

that is

$$\sigma_m = \sigma_1 = 76,22 \text{ MPa} < \sigma_{yt}$$

where $\sigma_{yt} = \sigma_{0,2} = 260$ MPa for the Anticorodal - 100 aluminium alloy (refer Section E.1.2).

C.4 Torsion tubes

The torsional and bending stresses developed in the torsion tubes due to the twisting of the 'ladder-frame' chassis structure (ie. main beams and torsion tubes) are analysed for the chassis subject to a representative angle of twist over the length from the king-pin to the centre of the tri-axle bogie. This is achieved by considering the tyres on one side of the trailer parked on a 200 mm high kerb while the tyres on the other side and all the tyres of the truck-tractor are resting on a level surface (refer Figure C11).

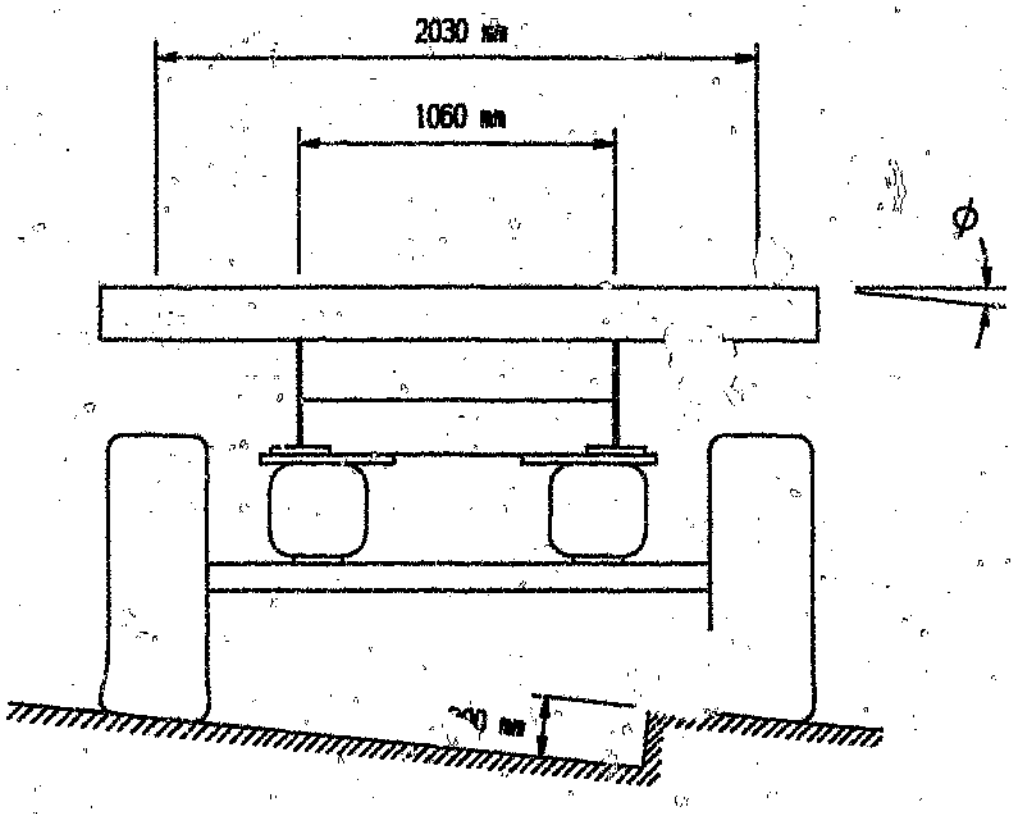

Figure C11 Torsionally deflected semi-trailer chassis viewed from rear

Apart from this torsional twisting, the two main chassis I-beams will rotate relative to one another. This is depicted in Figure C12.

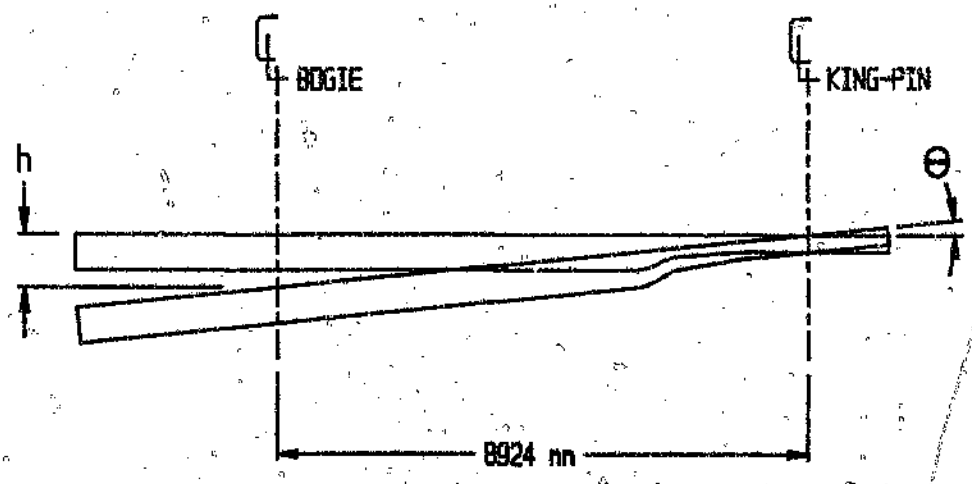

Figure C12 Main chassis I-beams in deflected position (exaggerated) as viewed from side

The height, h, is deduced from Figure C11 and Figure C12 as follows:

$$h = \left(\frac{1060}{2030}\right)(200)$$

$$= 104,4 \text{ mm}$$

$$\approx 105 \text{ mm}$$

Then:

$$\Theta = tan^{-1}\left(\frac{h}{8\,924}\right)$$

$$= 1,177 \times^{-2} \text{ radians}$$

Θ is approximately the angle of twist imposed on each of the torsion tube cross-members.

For a straight beam of circular cross-section:[44]

$$\frac{T}{J} = \frac{G\Theta}{\ell} = \frac{\tau}{r}$$

that is

$$\tau = \frac{\Theta G r}{\ell}$$

Maximum torsional shear stress occurs at the maximum radius. From Drawing No. OR-03:

$$r_{max} = 80 \text{ mm}$$

$$\ell = 1\,018 \text{ mm}$$

From Section E.1.3 in Appendix E:

$$G = 26,14 \times 10^3 \ MPa$$

Thus:

$$\tau_{max} = \frac{(1,177 \times 10^{-2})(26,14 \times 10^3)(80)}{(1\,018)}$$

$$= 24,18 \text{ MPa}$$

The torsion tubes are also subjected to a bending action (refer Figure C13) as a result of the angle of twist ϕ imposed on the main chassis I-beams.

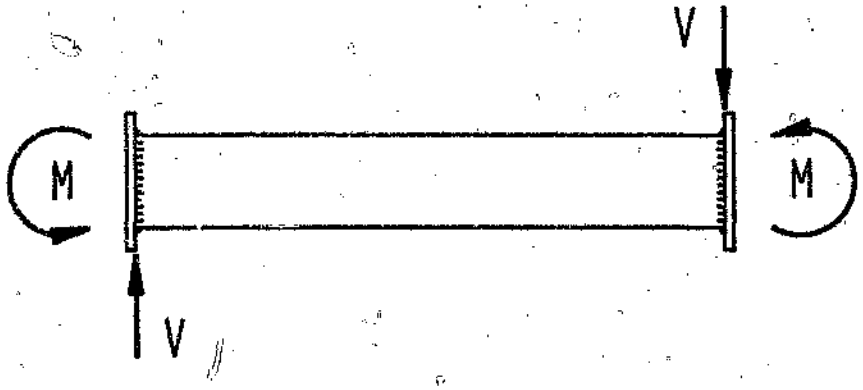

Figure C13 Bending moments and shear forces on the ends of the torsion tubes resulting from the torsional twisting of the chassis

Referring to Figure C13:

$$\phi = Sin^{-1}\left(\frac{200}{2030}\right)$$

$$= 9,868 \times 10^{-2} \text{ radians}$$

The varying depth of the chassis I-beams is approximated by considering the beams as stepped beams.

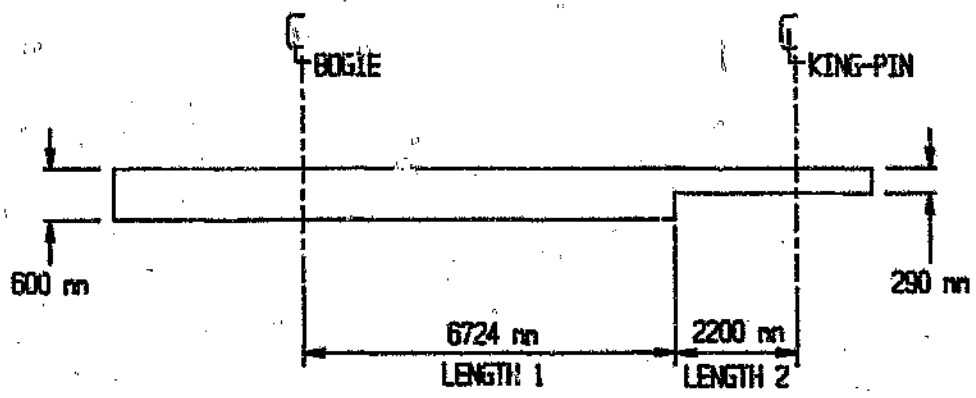

Figure C14 Chassis I-beams approximated as stepped beams

Then:

$$T_1 = T_2 = T$$

$$\phi_{total} = \phi_1 + \phi_2$$

For a thin walled open section:[30,43]

$$T = \frac{G\phi}{3\ell} \sum dt^3$$

Substituting:

$$\phi_{total} = \frac{3T\ell_1}{G(\sum dt^3)_1} + \frac{3T\ell_2}{G(\sum dt^3)_2}$$

and rearranging

$$T = \frac{G\phi_{total}}{3\left[\frac{\ell_1}{(\sum dt^3)_1} + \frac{\ell_2}{(\sum dt^3)_2}\right]}$$

where (refer Drawing No. M5260-415.3)

$$\left(\sum dt^3\right)_1 = (2)(200)(20)^3 + (560)(10)^3$$

$$= 3\,760\,000 \text{ mm}^4$$

$$\left(\sum dt^3\right)_2 = (2)(200)(20)^3 + (250)(10)^3$$

$$= 3\,450\,000 \text{ mm}^4$$

Hence:

$$T = \frac{(26,14 \times 10^3)(9,868 \times 10^{-2}}{(3)\left[\frac{6\,724}{3\,760\,000} + \frac{2\,200}{3\,450\,000}\right]}$$

$$= 354\,427 \text{ Nmm}$$

This torque is the bending moment applied to the ends of the torsion tubes.

The maximum bending stress will occur immediately adjacent to the welds at the ends of the tubes (ie. at max. bending moment) and is given by:

$$(\sigma_b)_{max} = \frac{My}{I}$$

where

$M = T = 354\,427$ Nmm

$y = 30$ mm

$I = 8,619 \times 10^6$ mm^4

Thus:

$(\sigma_b)_{max} = 3,290$ MPa

The direct shear stress resulting from the shear forces indicated in Figure C13 can be shown to be negligible.

The maximum principal stresses occur at the upper and lower ends of a vertical diameter at either end of the tube.

By Mohr Circle techniques for zero longitudinal stress:

$$\sigma_{1,2} = \left(\frac{\sigma_x}{2}\right) \pm \sqrt{\left(\frac{\sigma_x}{2}\right)^2 + \tau^2}$$

where

σ_x = maximum bending stress

τ = maximum torsional shear stress

that is

$\sigma_1 = 25,88$ MPa

and

$\sigma_2 = -22,59$ MPa

Here the maximum bending stress has been taken to be positive. The actual sign of the maximum bending stress, and hence of the principal stresses, will depend on the direction of the angle of twist ϕ and the position of the principal stresses being evaluated.

Applying the Von Mises failure criterion:

$$(\sigma_1 - \sigma_2)^2 + \sigma_1^2 + \sigma_2^2 \leq 2{\sigma_{yt}}^2$$

that is

$$\sigma_m = 42,01 \text{ MPa} < \sigma_{yt}$$

where $\sigma_{yt} = \sigma_{0,2} = 110$ MPa for the D65S aluminium alloy in the weld region (refer Section E.1.3).

C.5 Upper Coupler

Due to the possibility of high impact forces at the king-pin, the upper coupler structure is designed to stringent design requirements (refer Section 4.4.4).

In the following analysis, the maximum horizontal load applied at the king-pin is the 35 970 kg mass of the loaded semi-trailer times a load factor of 3,5. Maximum vertical load, on the other hand, is equal to the king-pin load for the pseudo-dynamic (Case 1) loading condition in Section A.2, that is, 187793 N.

Due to the extreme nature of these loads, they are not considered to act simultaneously.

C.5.1 Upper coupler structure - horizontal load analysis

Horizontal loads at the king-pin are applied relatively close to the plane of the rubbing plate (ie. via the wearing ring and lock jaw assembly of the 5th wheel on the truck-tractor) and are consequently resisted for the most part by the rubbing plate acting as a large shear plate. The upper coupler cross-members and rubbing plate cross-brace channels, especially those in close proximity to the king-pin position, also help to support these loads and to transfer them to the main chassis longitudinals.

In the following analysis then, all of the horizontal load is assumed to be carried by the two rubbing plate cross-brace channels immediately adjacent to the king-pin as well as a portion of the rubbing plate (refer Figure C15 and Drawing No. UC-02).

The 280 mm cut-out corresponds to the mounting recess for the 'Hope' anti-jack-knife king-pin and the 70 millimetre dimension is assumed. Furthermore, only bending and shear loading are included in this analysis, since the shear centre of the rubbing plate and cross-brace structure can be shown to be marginally below the under surface of the plate, ie. in line with the 5th wheel wear ring and lock jaw assembly.

The free body diagram for horizontal loading of this composite beam is as shown in Figure C16. The end fixing conditions of the composite beam will be somewhere between fixed and simply supported, since flexure of the chassis beams will allow some movement and rotation at the plate edges. However, the precise nature of these edge fixing conditions is not determinable, and

so for the purpose of this design check, a worst case of simply supported is assumed. The length of the composite beam is assumed to extend to

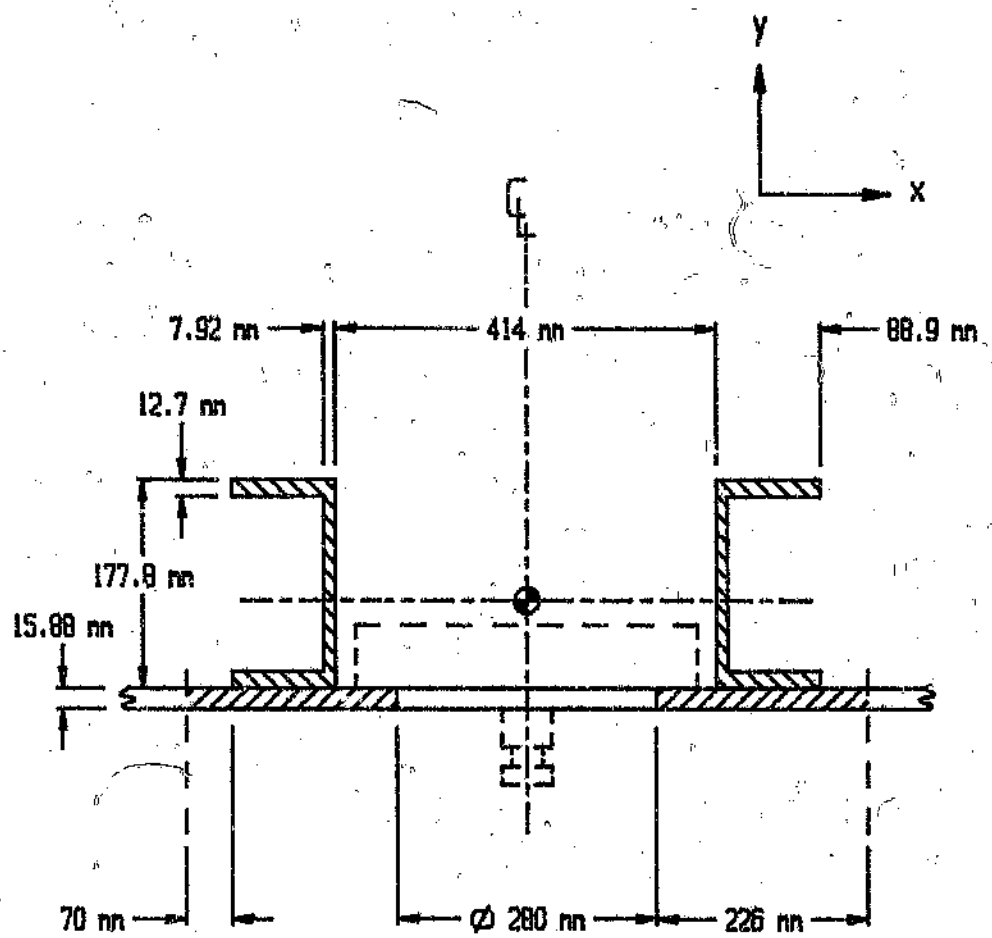

Figure C15 Section through upper coupler support structure at king-pin

the inner row of rubbing plate mounting bolts in the lower flanges of the chassis I-beams. The horizontal load is distributed over the width of the 'Hope' king-pin mounting recess.

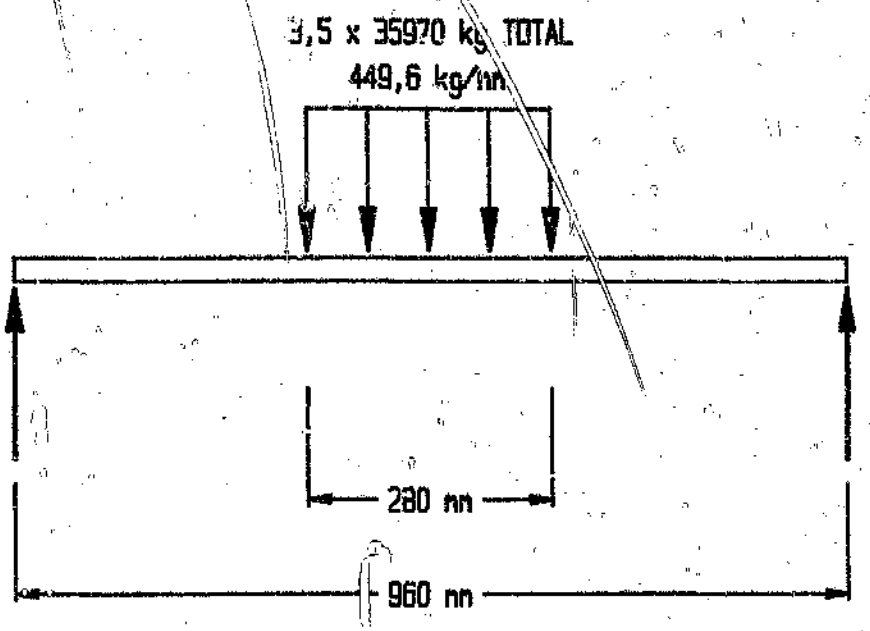

Figure C16 Free body diagram of upper coupler structure for horizontal loading

Maximum bending moment for bending about the y-axis occurs at the centre of the beam and is given by:

$$M_y = (3,5)(35\,970)(9,81)\left[\left(\frac{960}{4}\right) - \left(\frac{280}{8}\right)\right]$$

$$= 2,532 \times 10^8 \text{ Nmm}$$

The second moment of area of area of the total section about the y-axis in Figure C15 is:

$$I_y = 8,860 \times 10^8 \text{ mm}^4$$

The extreme fibre bending stress is then given by:

$$\sigma_b = \frac{(2,532 \times 10^6)(366)}{(8,860 \times 10^6)}$$

$$= \pm 104,6 \text{ MPa}$$

Shear force is zero at the centre of the beam. Hence, $\sigma_1 = \sigma_b$ and $\sigma_2 = \sigma_3 = 0$. The Von Mises failure criterion then reduces to:

$\sigma_m = 104,6$ MPa $< \sigma_{yt}$

where $\sigma_{yt} = \sigma_{0,2} = 255$ MPa for the B51S-TF aluminium alloy (refer Section E.1.4).

The bending stress in the heat affected zone immediately outboard of the outer channel to rubbing plate welds is:

$$\sigma_b = \frac{(2,532 \times 10^6)(301,9)}{(3,860 \times 10^7)}$$

$$= \pm 86,28 \text{ MPa}$$

As above, shear force is zero at the centre of the beam and hence $\sigma_1 = \sigma_b$ and $\sigma_2 = \sigma_3 = 0$. The Von Mises failure criterion thus yields:

$\sigma_m = 86,28$ MPa $< \sigma_{yt}$

where $\sigma_{yt} = \sigma_{0,2} = 110$ MPa for the D65S and B51S aluminium alloys in the welded condition (refer Section E.1.3 and Section E.1.4).

Maximum shear stress occurs at the neutral axis on the cross-section immediately adjacent to the 280 millimetre diameter 'Hope' king-pin mounting recess, viz:

$$\tau = \frac{VA\bar{y}}{tI}$$

where

$V = 617515$ N

$A = 9277$ mm^2

$\bar{y} = 203,3$ mm

$t = 15,88$ mm

$I = 9,150 \times 10^8$ mm^4

Thus:

$\tau = 80,15$ MPa

The shear yield strength of the B51S-TF aluminium alloy plate is 145 MPa (refer Section E.1.4).

C.5.2 Upper coupler structure - vertical load analysis

Vertical loads applied to the upper coupler structure are distributed over the roughly oval contact area between the truck-tractor 5th wheel coupling and the rubbing plate. For a typical 5th wheel,[51] this contact area is centred on the king-pin position and extends to a total width of 915 millimetres and a total length of 660 millimetres (refer Figure C17). Furthermore, the length of that portion of the contact area that protrudes under the main chassis

I-beam flanges is 275 millimetres.

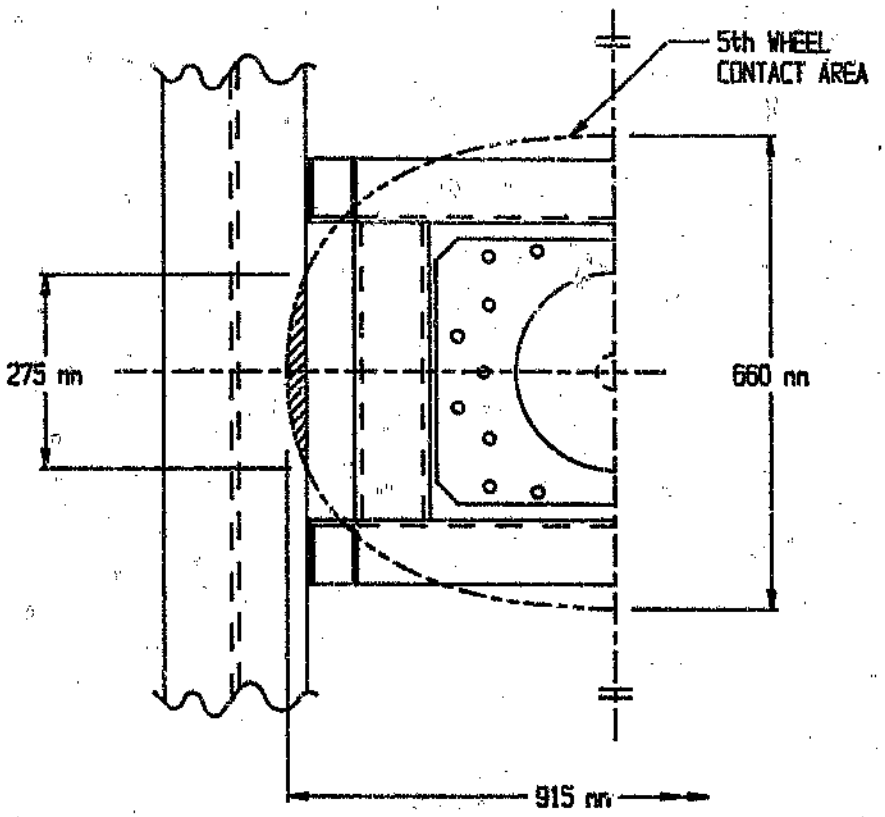

Figure C17 Contact area between 5th wheel and rubbing plate

Under these conditions, failure of the upper coupler structure as shown in Figure C15 due to bending is unlikely because of the large width over which the vertical load is distributed and the fact that the 5th wheel plate is very rigid. The likely mode of failure in this case is the development of a plastic hinge at the lower end of the chassis I-beam web and in the rubbing plate along the edge of the 5th wheel contact area. This is depicted in Figure C18 where F is the resultant of the force between the rubbing plate and the underside of the I-beam lower flange.

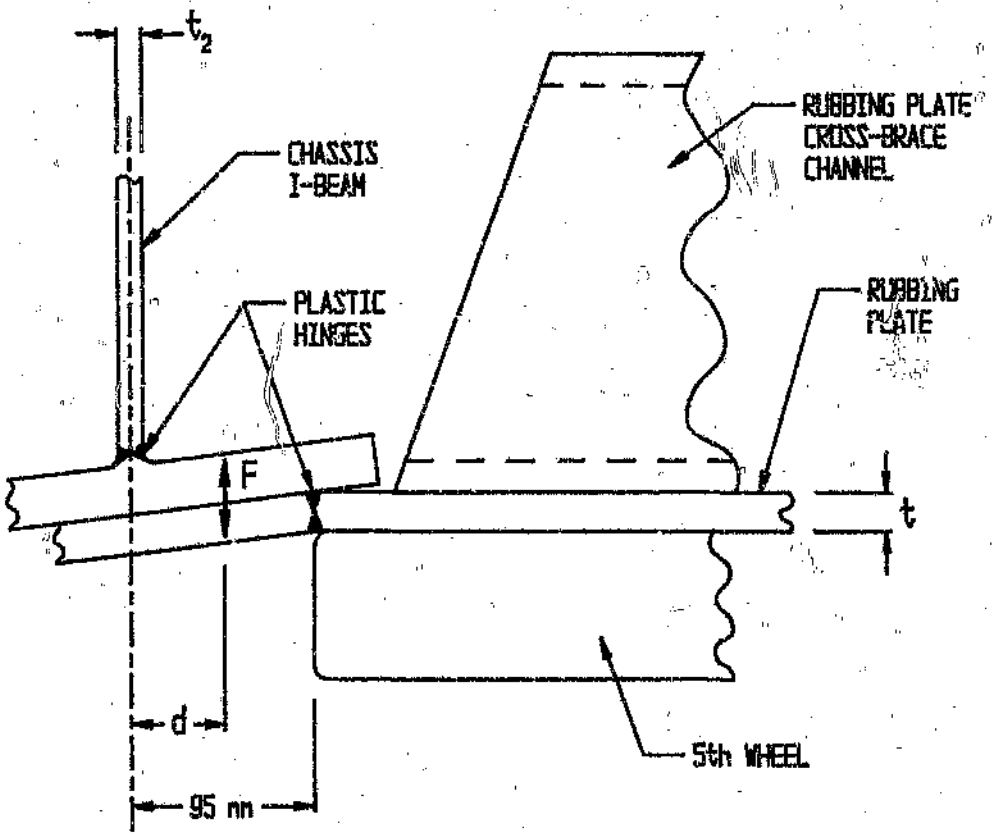

Figure C18 Plastic hinges at edge of upper coupler structure

In the following design check, for the sake of simplicity, all of the vertical load is assumed to be transferred from the 5th wheel to the chassis structure over a 400 millimetre length. The average distance from the edge of the 5th wheel contact area over this length to the centre of the chassis I-beam web is 95 millimetres.

The value of force F necessary to produce plastic hinges as indicated in Figure C18 is then derived from:

$$F = \left(\frac{M_p \text{ at I-web}}{d}\right) + \left(\frac{M_p \text{ at rubbing plate}}{4(95-d)}\right)$$

$$= \left(\frac{400\,\sigma_{yt}\,t_2^2}{4d}\right) + \left(\frac{400\,\sigma_{yt}\,t^2}{4(95-d)}\right)$$

$$= \frac{(400)(260)(10)^2}{(4)d} + \frac{(400)(255)(15,88)^2}{(4)(95-d)}$$

$$= \left(\frac{2,600 \times 10^6}{d}\right) + \left(\frac{6,430 \times 10^6}{95-d}\right)$$

Solving for minimum F:

$d = 36,9$ mm

from which

$F = 181\,140$ N

Hence, for both sides of the trailer, the total force necessary to cause failure is 362 280 N. This is 1,93 times greater than the maximum design vertical king-pin load of 187 793 N discussed above.

C.5.3 Rubbing plate mounting bolts

The horizontal load applied at the king-pin results in bearing stresses at the rubbing plate mounting bolts. Although a small percentage of this load is transferred from the rubbing plate to the chassis I-beams via the upper coupler cross-members, all of the horizontal load is assumed in this analysis

to be supported by the rubbing plate to main I-beam flange mounting bolts. Furthermore, in order to account for inaccuracies in the positioning and size of the bolt holes resulting during the manufacturing and assembly processes, only eighty percent of the bolts are assumed to be bearing.

Maximum bearing stress will occur in the rubbing plate since the rubbing plate is thinner than the chassis I-beam flange. For twenty M16 mounting bolts and a 15,88 millimetre rubbing plate (refer Drawing No. UC-03), the total bearing area is:

$$A = 4065 \text{ mm}$$

Whence, the average bearing stress is:

$$\sigma_B = \frac{(3,5)(35970)(9,81)}{(4065)}$$

$$= 303,8 \text{ MPa}$$

The allowable bearing stress for the B51S-TF aluminium alloy plate is 607 MPa (refer Section E.1.4).

C.5.4 'Hope' king pin foundation plate bolts

The horizontal king-pin load is supported at the 'Hope' king-pin foundation plate by eighteen M16 bolts. As above, only eighty percent of the bolts are assumed to be bearing at any time. For bearing in the rubbing plate, the total bearing area is:

$$A = 3659 \text{ mm}$$

Hence, the bearing stresses in the rubbing plate are:

$$\sigma_B = \frac{(3,5)(35970)(9,81)}{(3659)}$$

$$= 337,5 \text{ MPa}$$

The allowable bearing stress for the L51S-TF alloy rubbing plate material is 607 MPa (refer Section E.1.4).

Bearing stresses in the 12,3 millimetre foundation plate are discussed in Section D.5 of Appendix D.

APPENDIX D

STRESS ANALYSIS OF ANCILLARY STRUCTURE

D.1 Introduction

This appendix details the design calculations relating to the semi-trailer ancillary structure. The term ancillary structure refers to that semi-trailer structure that is in general non-load bearing, except under certain circumstances, and to minor vehicle components.

D.2 Rear Under-ride bumper

The rear under-ride bumper is designed to meet the specifications of SABS 1055-1983 (refer Section 4.5.1).

With reference to Figure D1, the maximum load requirements of SABS 1055 are:

- A horizontal force of 25 kN applied successively to both points P_1 and to point P_3.
- A horizontal force of 100 kN applied successively to both points P_2.

Note that the exact position of points P_2 are to be specified by the manufacturer. In this design these two points are positioned at 700 mm centres.

In order to allow the bumper to deflect to some degree under load, and thereby to absorb a certain amount of impact energy (refer Section 4.5.1), the bumper is designed without any factor of safety and over-design is reduced to a minimum.

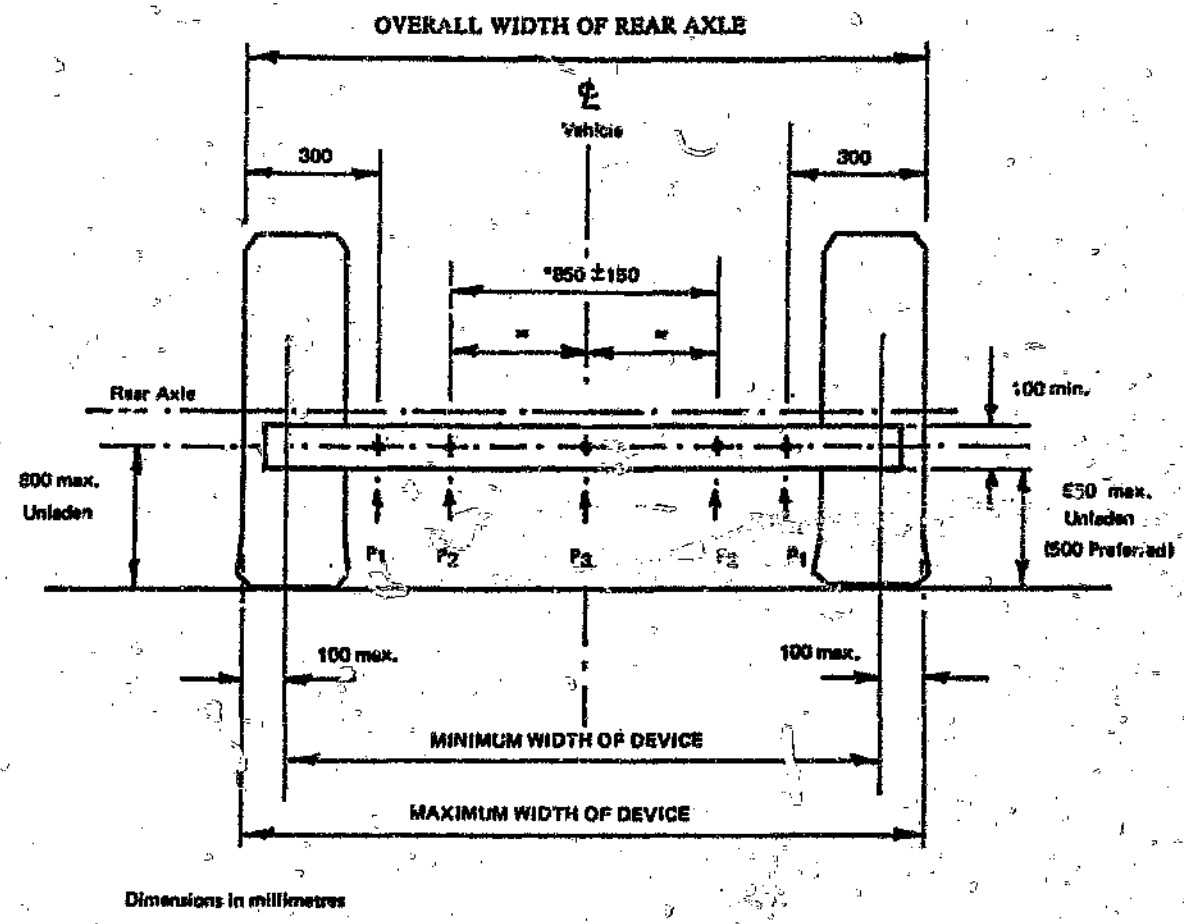

Figure D1 Resistance Points P_1, P_2 and P_3[23]

D.2.1 Stresses due to load at P_1

Maximum stress in the horizontal bumper bar for 25 kN applied at point P_1 occurs at the adjacent upright member.

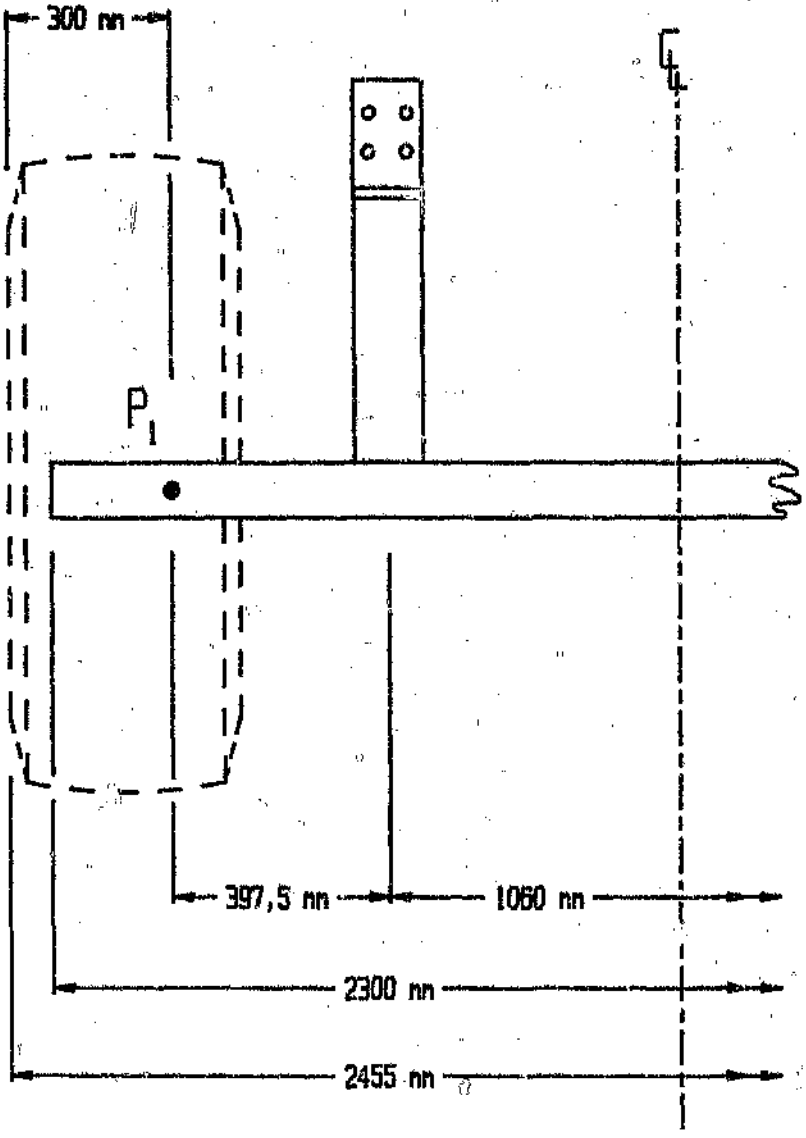

Figure D2 General dimensions of bumper showing position of point P_1

Referring to Drawing No. RB-01 and Figure D2 above, and assuming that the bumper bar is supported at the centre of the upright, the bending moment is:

$$M = (25\,000)(397,5)$$

$$= 9,938 \times 10^6 \text{ Nmm}$$

Section properties for the bumper bar are:

$$I = 5,684 \times 10^6 \text{ mm}^4$$

$$y_{max} = 63,5 \text{ mm}$$

Whence, the extreme fibre bending stress is:

$$\sigma_b = 111,0 \text{ MPa}$$

and

$$\sigma_1 = \sigma_b = 111,0 \text{ MPa}$$

since shear stress is zero at the extreme fibres. Consequently, for $\sigma_2 = \sigma_3 = 0$

$$\sigma_m = 111,0 \text{ MPa}$$

This value is approximately equal to the 110 MPa, minimum 0.2% proof stress for the D65S-TF alloy in the welded region, but is below the ultimate tensile strength of 165 MPa (refer Section E.1.3).

The stresses in the upright members due to the 25 kN load at P_1 can be shown to be less than those due to the loads at points P_2 and, hence, are not shown here.

D.2.2 Stresses due to load at P_2

The horizontal bumper bar is assumed to be simply supported at the centres of the upright members. The free body diagram for the bumper bar is then as shown in Figure D3.

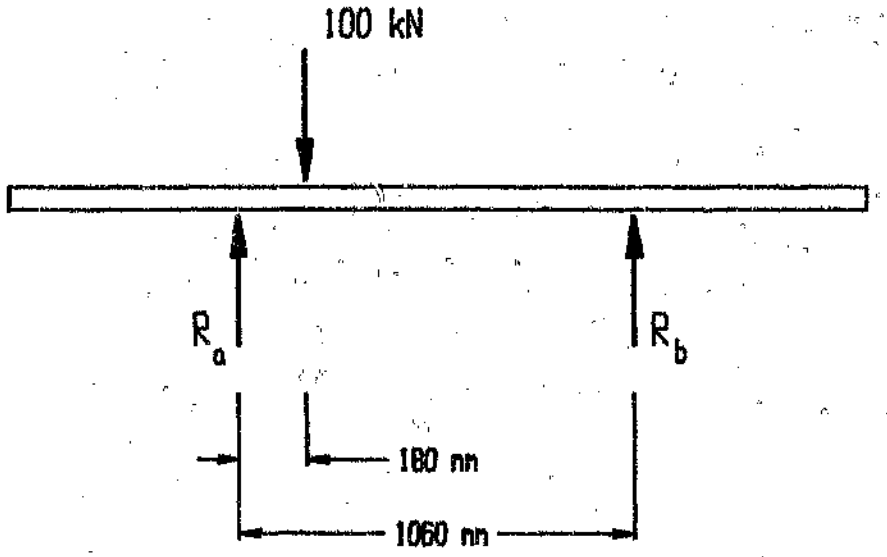

Figure D3 Free body diagram of bumper bar for 100 kN load at point P_2

The reactions at the uprights are:

$R_a = 83,0$ kN

and

$R_b = 17,0$ kN

Maximum bending moment in the bumper bar is at the 100 kN load and is

equal to:

$$M = 1,494 \times 10^7 \text{ Nmm}$$

The extreme fibre bending stress is then:

$$\sigma_b = \frac{(1,494 \times 10^7)(63,5)}{(5,684 \times 10^6)}$$

$$= 166,9 \text{ MPa}$$

and

$$\sigma_1 = \sigma_b = 166,9 \text{ MPa}$$

at the extreme fibres. Applying the Von Mises failure criterion for $\sigma_2 = \sigma_3 = 0$

$$\sigma_m = 166,9 \text{ MPa}$$

This value is significantly less than the allowable stresses for the D65S-TF alloy. That is:

$$\sigma_{0,2} = 255 \text{ MPa}$$

$$\sigma_{ULT} = 295 \text{ MPa}$$

The maximum stress in the upright member corresponding to force R_a occurs at the extreme fibres for the section immediately below the fillet welds (through the full penetration welds) at the top of the member. The bending moment at this section (refer Drawing No. RB-01) is:

$$M = (83\,000)(509)$$

$$= 4,225 \times 10^7 \text{ Nmm}$$

Section properties are:

$$I = 3,256 \times 10^7 \text{ mm}^4$$

$$y_{max} = 90,5 \text{ mm}$$

Thus, the extreme fibre bending stress is:

$$\sigma_b = 117,4 \text{ MPa}$$

Shear stress is zero at extreme fibres; whence:

$$\sigma_1 = \sigma_b = 117,4 \text{ MPa}$$

For $\sigma_2 = \sigma_3 = 0$, the Von Mises failure criterion reduces to:

$$\sigma_m = \sigma_1 = 117,4 \text{ MPa}$$

Note that, although the Von Mises stress calculated above is marginally higher than the 110 MPa 0,2 percent proof stress of the D65S aluminium alloy in the heat affected zone, it is significantly less than the 165 MPa ultimate tensile stress of the material in the heat affected zone, and is considered acceptable in this case.

The shear stress at the web-flange welds for this section are given by:

$$\tau = \frac{VA\bar{y}}{tI}$$

where

$V = 83\,000$ N

$A = 2\,017$ mm^2

$\bar{y} = 82,56$ mm

$t = (4)(6)(0,707)$

$= 16,97$ mm

That is:

$\tau = 25,01$ MPa

Bending stress at the welds is:

$\sigma_b = 96,80$ MPa

$= \sigma_x$

Maximum and minimum principal stresses are:

$$\sigma_{1,2} = \frac{\sigma_x}{2} \pm \sqrt{\left(\frac{\sigma_x}{2}\right)^2 + \tau^2}$$

that is

$\sigma_1 = 102,9$ MPa

$\sigma_2 = -6,08$ MPa

and

$\tau_p = 54,48$ MPa

This is the maximum principal shear stress in the web-flange welds of the upright members. The transverse shear stress at the web-flange welds for the section immediately above the bumper bar (ie. 40,93 MPa) is higher than that calculated for the section above, but the principal shear stress in the welds is less (ie. 41,31 MPa).

Substituting into the Von Mises failure criterion:

$$(\sigma_1 - \sigma_2)^2 + {\sigma_1}^2 + {\sigma_2}^2 \leq 2{\sigma_{yt}}^2$$

$$\sigma_m = 106,1 \text{ MPa} < \sigma_{yt}$$

where σ_{yt} is taken to be the lower of the 0,2 percent proof stresses for D65S and D54S alloys in the welded condition, ie. $\sigma_{yt} = 110$ MPa (refer Section E.1.3 and Section E.1.5).

D.2.3 Stresses due to load at P_3

The free body diagram for 25 kN at point P_3 is shown in Figure D4.

Maximum bending moment is at the centre, ie:

$$M = 6,625 \times 10^6 \text{ Nmm}$$

The section properties for the bumper bar are:

$$I = 5,681 \times 10^6 \text{ mm}^4$$

$$y_{max} = 63,5 \text{ mm}$$

Whence, the extreme fibre bending stress is:

$\sigma_b = 74,01 \quad MPa$

and

$\sigma_1 = \sigma_b$

since $\tau = 0$ at the extreme fibres. Applying the Von Mises failure criterion for $\sigma_2 = \sigma_3 = 0$

$\sigma_m = 74,01 \quad MPa \quad < \sigma_{yt}$

where $\sigma_{yt} = \sigma_{0,2} = 255 \quad MPa$ for the D65S-TF aluminium alloy (refer Section E.1.3).

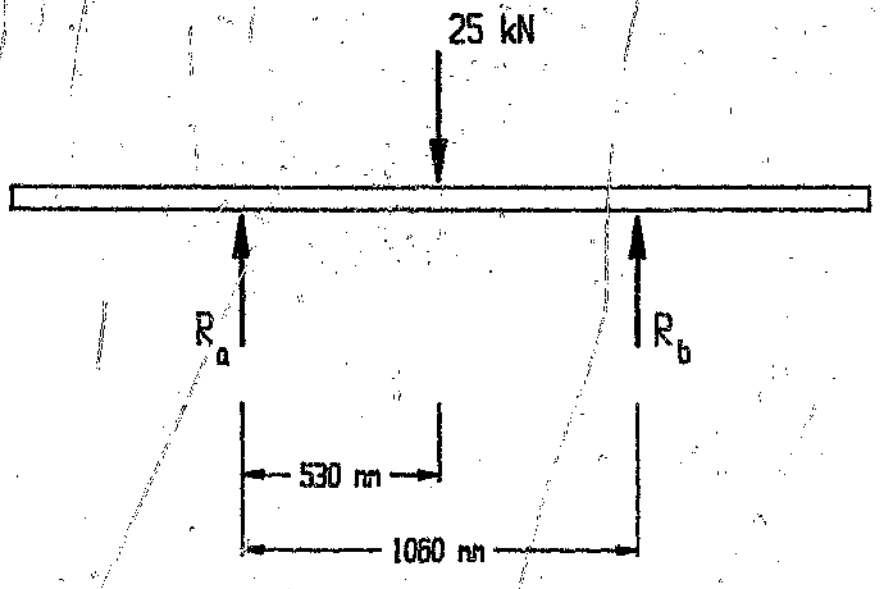

Figure D4 Free body diagram of bumper bar for 25 kN at load point P_3

The stress in the upright members as a result of this 25 kN load will be less than the maximum stress calculated in Section D.2.2.

D.3 Headboard

The headboard must be capable of sustaining any force exerted by the payload during braking. Assuming that there is no slip between the payload and the deck, the load distribution on the headboard may be modelled as follows:

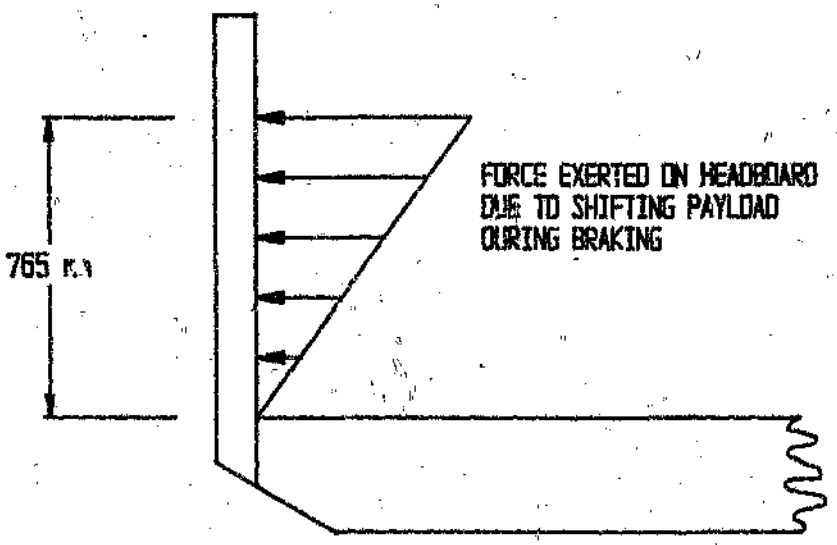

Figure D5 Load distribution on headboard

Note that the load is assumed to extend only to the top of the 4,77 mm plate on the headboard; that is, 765 mm above deck level (refer Drawing No. HB-01).

For a braking deceleration of 0,65-g and a limiting coefficient of friction of 0,5 between an evenly distributed load and the deck, the load imposed on the headboard can be shown to be in the region of 5 000 kg for a 30 000 kg payload. The two inner upright members are assumed to support one third

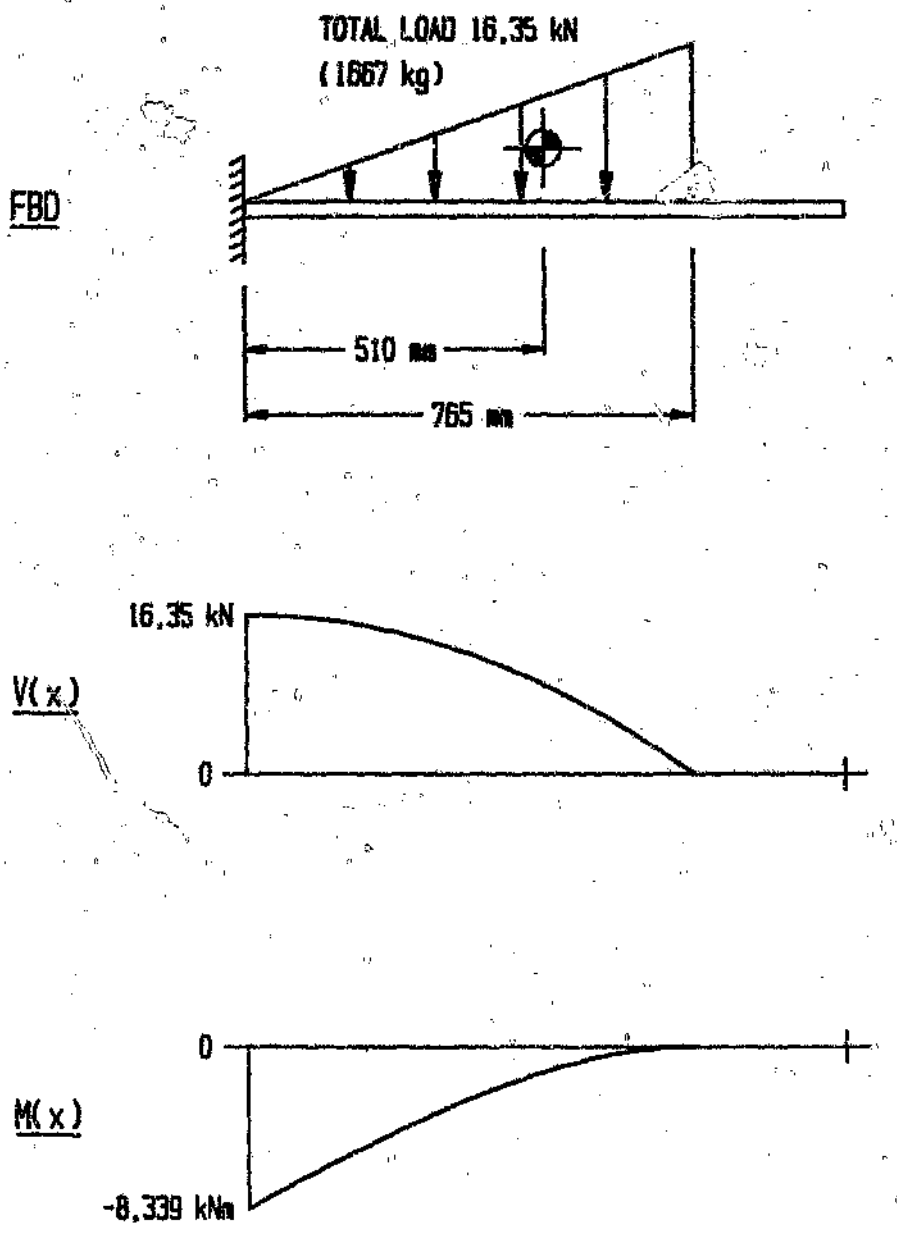

Figure D6 Shear force and bending moment diagrams for headboard inner members

of this load each while the outer uprights each support one sixth of the load. Figure D6 presents shear force and bending moment diagrams for the inner upright members.

The section properties for the headboard upright members are:

$$y_{max} = 52,5 \text{ mm}$$

$$I = 4,033 \times 10^6 \text{ mm}^4$$

Although maximum bending stress will occur at the extreme fibres of the I-section member immediately above the mounting bolts, the most critical section is at the welds at the deck level due to reduced material strength in the heat affected zone. This corresponds to the left hand end of Figure D6, above.

Calculating the extreme fibre bending stress for the section at deck level:

$$\sigma_b = \frac{(8,339 \times 10^6)(52,5)}{(4,033 \times 10^6)}$$

$$= 108,5 \text{ MPa}$$

At the extreme fibres $\sigma_1 = \sigma_b$ and the Von Mises stress is:

$$\sigma_m = \sigma_1 = 108,5 \text{ MPa} < \sigma_{yt}$$

where $\sigma_{yt} = \sigma_{0,2} = 110$ MPa for the D65S alloy in the weld zone (refer Section E.1.3).

For the load distribution in Figure D5 the horizontal channel section 765 mm above the deck will experience approximately 2 400 kg load uniformly

distributed over the full width of the headboard. This channel section is modelled as a continuous beam supported on four rigid supports and is analysed using the beam analysis program discussed in Section C.2. The main results are presented in Figure D7.

The section properties for the channel section are:

$y_{max} = 50,8 \ \ mm$

$I = 1,840 \times 10^6 \ \ mm^4$

Whence, the extreme fibre bending stress at the centre is:

$$\sigma_b = \frac{(585,2 \times 10^3)(50,8)}{(1,840 \times 10^6)}$$

$$= 16,16 \ \ MPa$$

Also, $\sigma_1 = \sigma_b$ at the extreme fibres. The Von Mises failure stress is:

$\sigma_m = \sigma_1 = 16,16 \ \ MPa \ \ < \sigma_{yt}$

where $\sigma_{yt} = \sigma_{0,2} = 255 \ \ MPa$ for the D65S-TF alloy (refer Section E.1.3).

The bending moments at the two inner supports above are carried by the welds. The weld area is shown in Figure D8 (also refer Drawing No. HB-01) and yields a second moment of area of $1,467 \times 10^6 \ \ mm^4$.

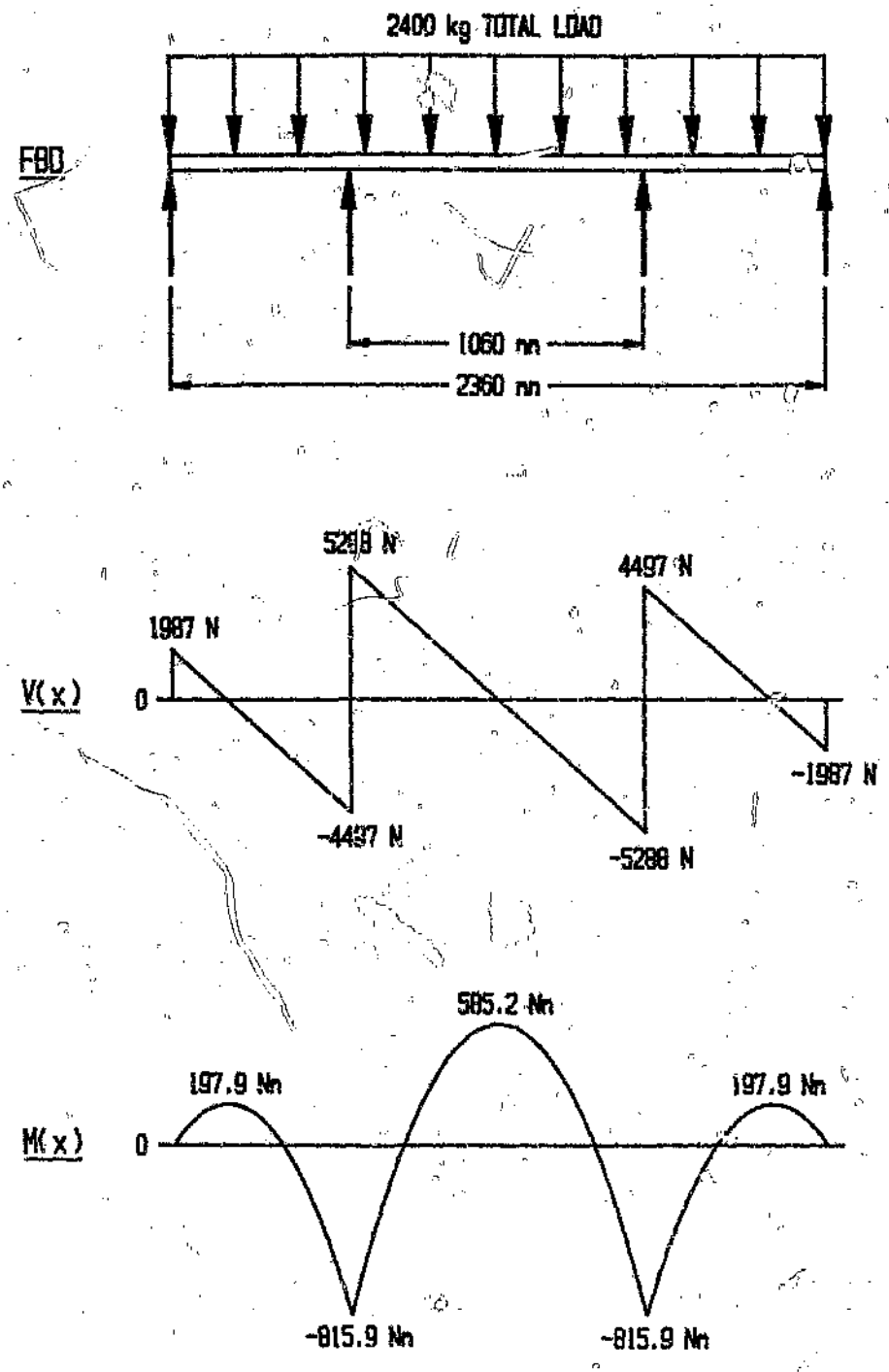

Figure D7 Shear force and bending moment diagrams for horizontal headboard member

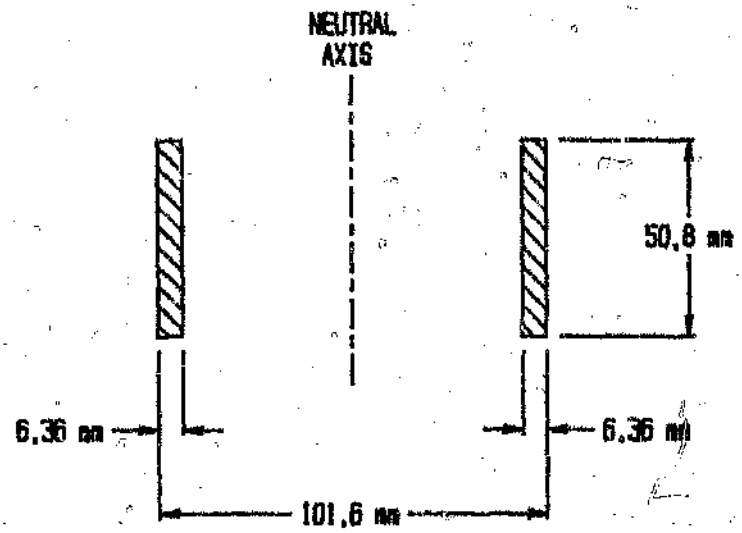

Figure D8 Headboard channel welds

The extreme fibre bending stress in the welds is then:

$$\sigma_b = \frac{(815,9 \times 10^3)(50,8)}{(1,467 \times 10^6)}$$

$$= 28,25 \text{ MPa}$$

Shear is zero at the extreme fibres and hence $\sigma_1 = \sigma_b$. Applying the Von Mises failure criterion:

$\sigma_{ms} = \sigma_1 = 28,25$ MPa $< \sigma_{yt}$

where $\sigma_{yt} = \sigma_{0,2} = 110$ MPa for the D65S alloy in the welded condition (refer Section E.1.3).

D.4 Landing Legs

Stresses in the landing leg mountings and support structure are checked here

for various loading conditions (also refer Section 4.5.3).

Vertical loading is modelled for a 2-g support slam when the trailer is in the uniformly loaded condition. This is depicted mathematically by superimposing onto the 1-g uniformly distributed load an additional triangular load of such magnitude as to only double R_L.[41] In order to accomplish this it is required that its centroid be at the landing leg location, ie. as shown in Figure D9.

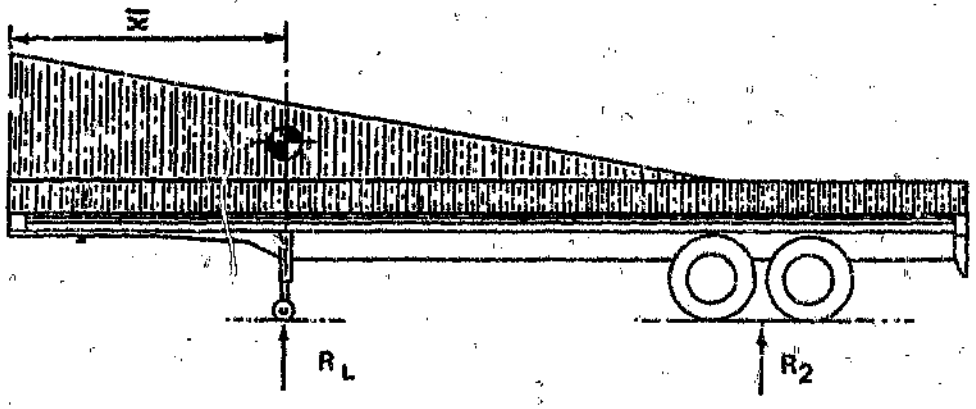

Figure D9 2-g Support slam condition

The stresses thus generated in the main chassis I-beams can, however, be shown to be less than the stresses resulting from the dynamic loading condition (ie. Case 1 loading - refer Appendix A and Appendix B) and, hence, are not considered here.

From the static uniform load distribution for the semi-trailer supported at the landing legs (refer Case 3 loading - Appendix B) the static landing leg load is 90724 N per leg or 181448 N per set. That is:

$R_L = 181448$ N

Hence, the 2-g slam load per landing leg is 181448 N.

Note that this is less than the maximum static load of 25 000 kg per leg (50 000 kg per set) that can be supported by the Jost E240G landing legs (refer Section 2.2.1).

Maximum transverse and longitudinal loads on the landing legs in this analysis are limited to 5 000 kg per leg in each direction applied at the underside of the foot.

D.4.1 Landing leg mounting bracket welds

Maximum stress in the welds of the landing leg mounting bracket occurs in the welds attaching the bracket to the main I-beam web (Figure D10). Note that, although much of the apparent bending load on these welds would be supported by the landing leg support structure, the full bending moment is applied here as a worst case situation.

Total weld area is:

$$A = (348)(10)(2) + (100)(10)(0,707)(2)$$
$$= 8\,374 \text{ mm}^2$$

Assuming a uniform distribution of shear stress on the weld section:[44]

$$\tau = \left(\frac{181\,448}{8\,374}\right)$$
$$= 21,67 \text{ MPa}$$

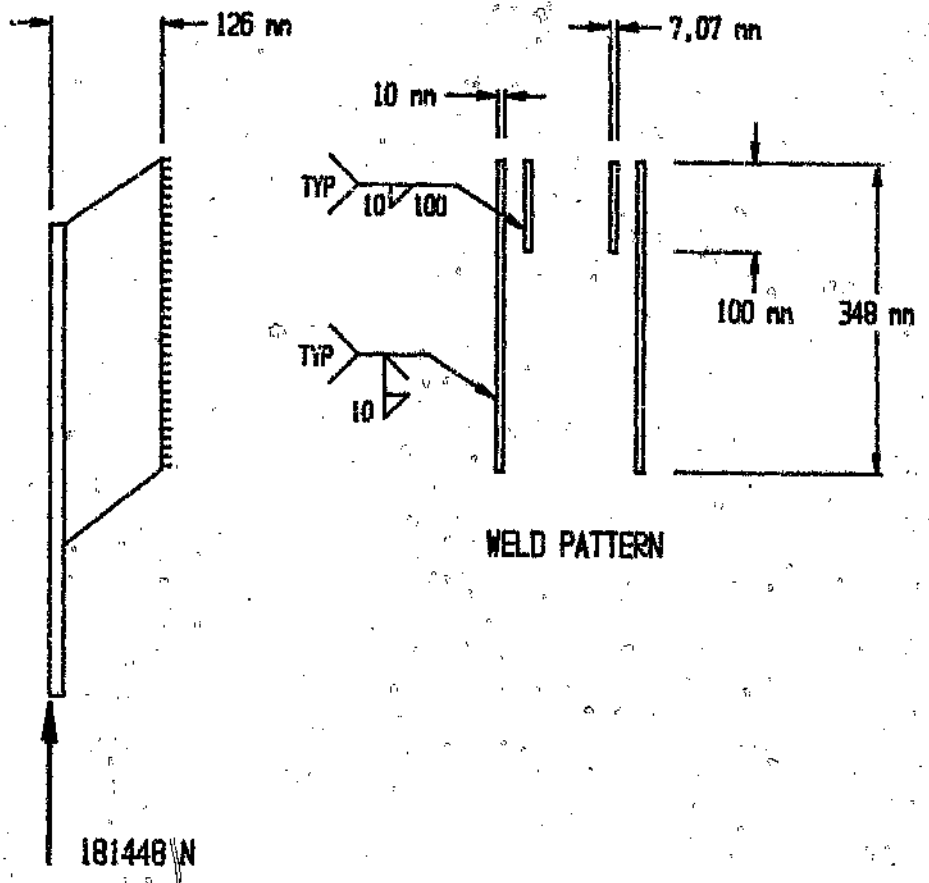

Figure D10 Landing leg mounting bracket

The ultimate shear strength of AA 5356 filler alloy welds is 124 MPa (refer Section E.2).

The bending load on the welds is:

$$M = (181\,448)(126)$$

$$= 2,286 \times 10^7 \text{ Nmm}$$

Section properties of the weld area are (refer Figure D10):

$y_{max} = 194,9 \text{ mm}$

$I = 8,949 \times 10^7 \text{ mm}^4$

Hence, the bending stress at the lower end of the weld pattern is:

$\sigma_b = 49,79 \text{ MPa}$

$= \sigma_x$

and

$$\sigma_{1,2} = \frac{\sigma_x}{2} \pm \sqrt{\left(\frac{\sigma_x}{2}\right)^2 + \tau^2}$$

that is

$\tau_p = 33,01 \text{ MPa}$

$\sigma_1 = 57,90 \text{ MPa}$

$\sigma_2 = -8,110 \text{ MPa}$

Applying the Von Mises failure criterion:

$$(\sigma_1 - \sigma_2)^2 + {\sigma_1}^2 + {\sigma_2}^2 \leq 2\sigma_{yt}^2$$

that is

$\sigma_m = 62,35 \text{ MPa} < \sigma_{yt}$

where $\sigma_{yt} = \sigma_{0,2} = 110$ MPa for the B5lS alloy in the welded condition (refer Section E.1.4).

D.4.2 Landing leg mounting bracket bolts and bolt holes

Each landing leg is bolted to its respective bracket using ten M14, 8.8 grade high tensile steel bolts.

The total bearing area on the mounting plate of the landing leg mounting bracket is:

$$A = (10)(14)(15,88)$$
$$= 2\,223 \text{ mm}^2$$

Hence, bearing stress is:

$$\sigma_B = -81,62 \text{ MPa}$$

The allowable bearing stress for the B51S-TF alloy is 607 MPa (refer Section E.1.4).

The M14 bolts will be in single shear. The total cross-sectional area of the ten bolts is:

$$A = (10)\frac{\pi(14)^2}{4}$$
$$= 1\,539 \text{ mm}^2$$

When assuming a uniform distribution of shear stress across each bolt sec[illegible]1)

$$\tau = 117,9 \text{ MPa}$$

The allowable bolt shear stress is taken as 50 percent of the 0,2 percent proof

stress for the 8.8 grade bolts; ie. 314 MPa.[6]

D.4.3 Rearward brace

The rearward landing leg brace will be in compression and will fail by lateral buckling when the landing legs are loaded as shown in Figure D11 below. Note that the loading legs are shown at half extension.

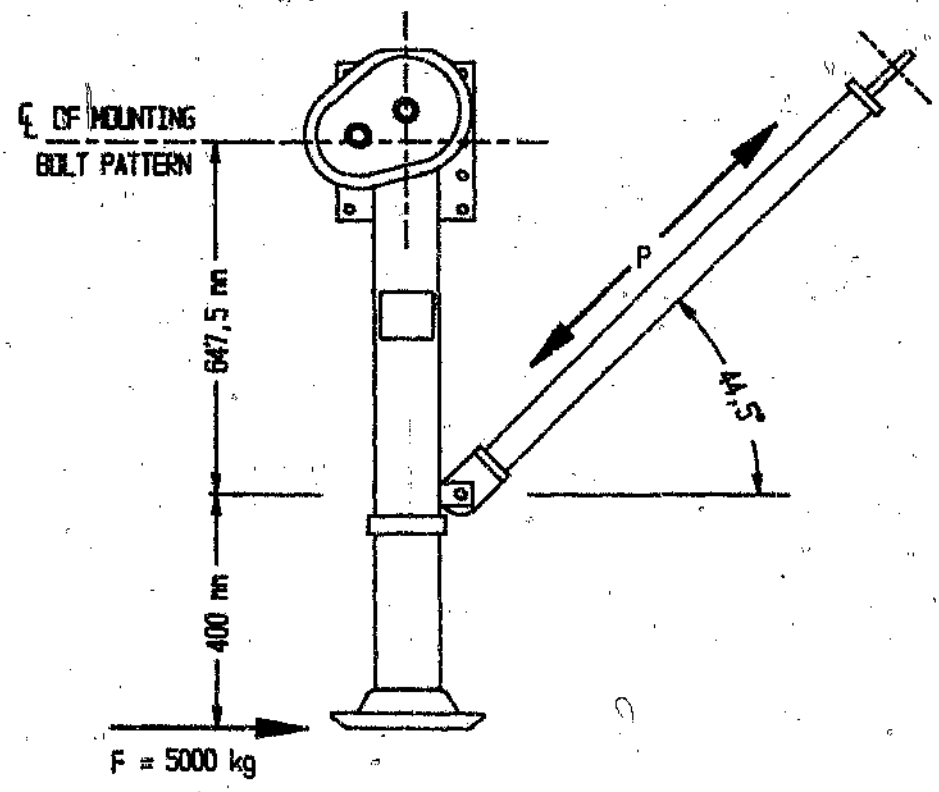

Figure D11 Landing leg rearward brace

Taking moments about the centre of the mounting bolt pattern:

$$PCos(44,5°)(647,5) = F(400 + 647,5)$$

that is

$$P = 11\,341 \quad \text{kg}$$

The buckling diagram for the D65S-TF aluminium alloy is presented in Graph D1 and is constructed by a similar procedure to that described in Appendix A, Section A.4.1.

The slenderness ratio for the rearward brace is:

$$\lambda = \frac{\ell}{k}$$

where

k = radius of gyration

$$= \sqrt{\frac{I}{A}}$$

and

$\ell = 1\,029$ mm (Drawing No. LL-05)

$I = 3,797 \times 10^5$ mm^4

$A = 1\,131$ mm^2

Graph D1 Buckling diagram for D65S-TF aluminium alloy

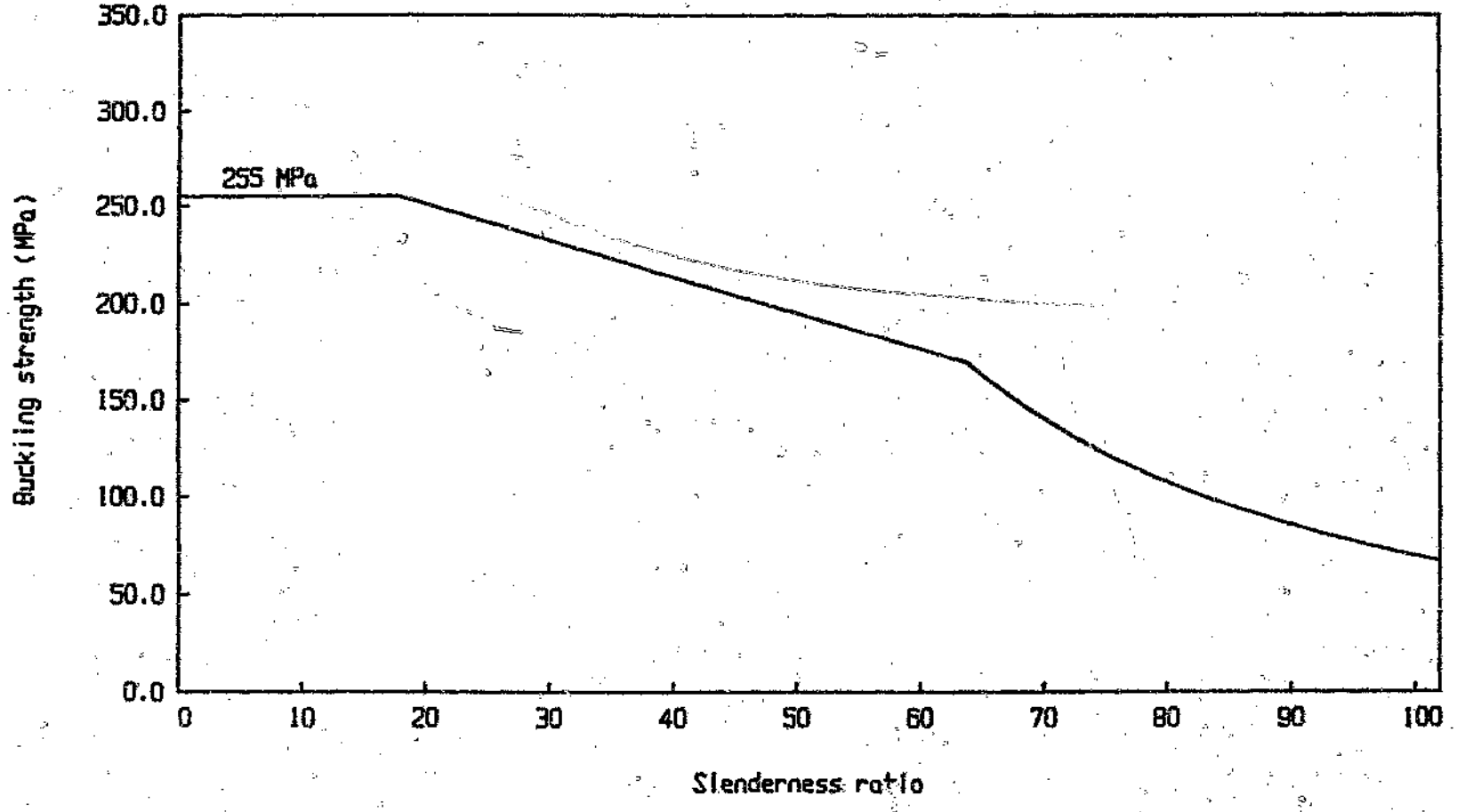

that is

$k = 18,32$ mm

and

$\lambda = 56,16$

The compressive load required to produce lateral buckling is then given by:[9]

$P_c = \sigma_c A$

where σ_c is obtained from Graph D1 for $\lambda = 56,16$. Thus:

$\sigma_c = 183,4$ MPa

and

$P_c = (183,4)(1\,131)$

$= 207425$ N

$= 21144$ kg

This is 1,86 times greater than the compressive load applied to the rearward brace.

The Euler buckling load for a pin-ended strut is:[30,43]

$P_e = \frac{\pi^2 EI}{\ell^2}$

$= 244207$ N

$= 24894$ kg

As expected, this value is slightly higher than the buckling load calculated above, since the Euler load does not include the contribution of direct compressive stress and is thus not accurate for relatively low slenderness ratios.[43]

D.4.4 Cross brace

The landing leg cross braces are loaded as depicted in Figure D12. As above, the landing legs are considered to be at half extension.

Taking moments about the centres of the mounting bolt patterns:

$$PCos(32,1°)(647,5) = F(400 + 647,5)$$

that is

$P = 9\,549$ kg The slenderness ratio for the cross brace is:

$$\lambda = \frac{\ell}{k}$$

where

$\ell = 664$ mm (Drawing No. LL-04)

$k = 18,32$ mm (refer Section D.4.3)

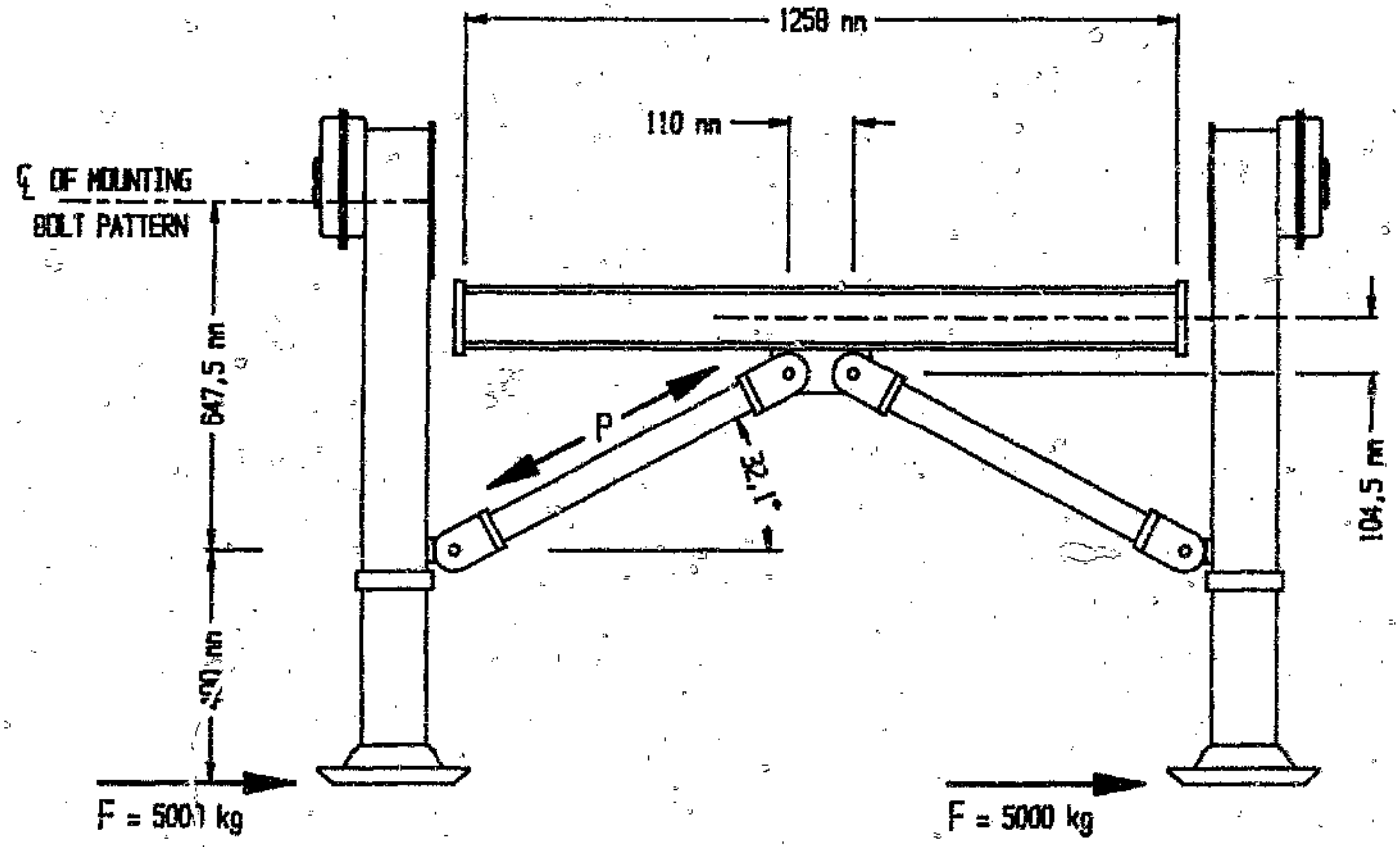

Figure D12 Landing leg cross braces

Thus:

$$\lambda = 36,24$$

Referring to Graph D1:

$$\sigma_c = 220 \quad \text{MPa}$$

Whence, the buckling load for the cross brace is given by:[9]

$$P_c = \sigma_c \ A$$
$$= 248820 \ \text{N}$$
$$= 25364 \ \text{kg}$$

This buckling load is 2,66 times greater than the maximum compressive load applied to the cross brace.

The Euler buckling load[30,43] in this case is (pin-ended)

$$P_e = \frac{\pi^2 EI}{\ell^2}$$
$$= 58480 \ \text{N}$$
$$= 59784 \ \text{kg}$$

which is far in excess of the applied load.

D.4.5 Landing leg brace ends

If force F in Figure D11 is applied in the opposite direction to that indicated, the rearward brace will be in tension and the brace ends will be required to

sustain the tensile force P calculated in Section D.4.3.

Referring to Drawing No. LL-05, the minimum cross sectional area in the weld zone between the brace end and the end cap is:

$$\begin{aligned} A &= (70)(15,88) \\ &= 1112 \text{ mm}^2 \end{aligned}$$

Hence, the weld stress is:

$$\begin{aligned} \sigma &= \frac{(11341)(9,81)}{(1112)} \\ &= 100,0 \text{ MPa} \end{aligned}$$

This is less than the 110 MPa 0,2 percent proof stress of the B51S alloy plate in the heat affected zone (refer E.1.4).

For the 7 mm fillet welds between the square tube and the brace end cap:

$$\begin{aligned} A &= [(50,8) + (2)(7)(0,707)]^2 - [50,8]^2 \\ &= 1104 \text{ mm}^2 \end{aligned}$$

and

$$\begin{aligned} \tau &= \frac{(11341)(9,81)}{(1104)} \\ &= 100,7 \text{ MPa} \end{aligned}$$

The ultimate shear strength of the transversely loaded AA 5356 filler alloy welds is 165 MPa (refer Section E.2).

The bearing area at the bolt hole for a M16 bolt is:

$$A = (16)(15,88) = 254,1 \text{ mm}^2$$

which results in a bearing stress of:

$$\sigma_B = -437,8 \text{ MPa}$$

The allowable bearing stress for B51S-T4 aluminium alloy is 607 MPa (refer Section E.1.4).

The 17 mm diameter hole is greater than 1,5 diameters from the edge of the plate and, hence, shear tear-out can be neglected.[66]

D.4.6 Landing leg cross-member

Once again referring to Figure D12, the resultant compression in the left hand cross brace causes the landing leg cross member to be loaded as indicated in Figure D13, below.

From Section D.4.4 above:

$$P = 9549 \text{ kg}$$
$$= 93676 \text{ N}$$

The moment M is given by (refer Figure D12):

$$M = PCos(32,1^o) \times (164,5)$$
$$= 8,293 \times 10^6 \text{ Nmm}$$
$$= 8,293 \text{ kNm}$$

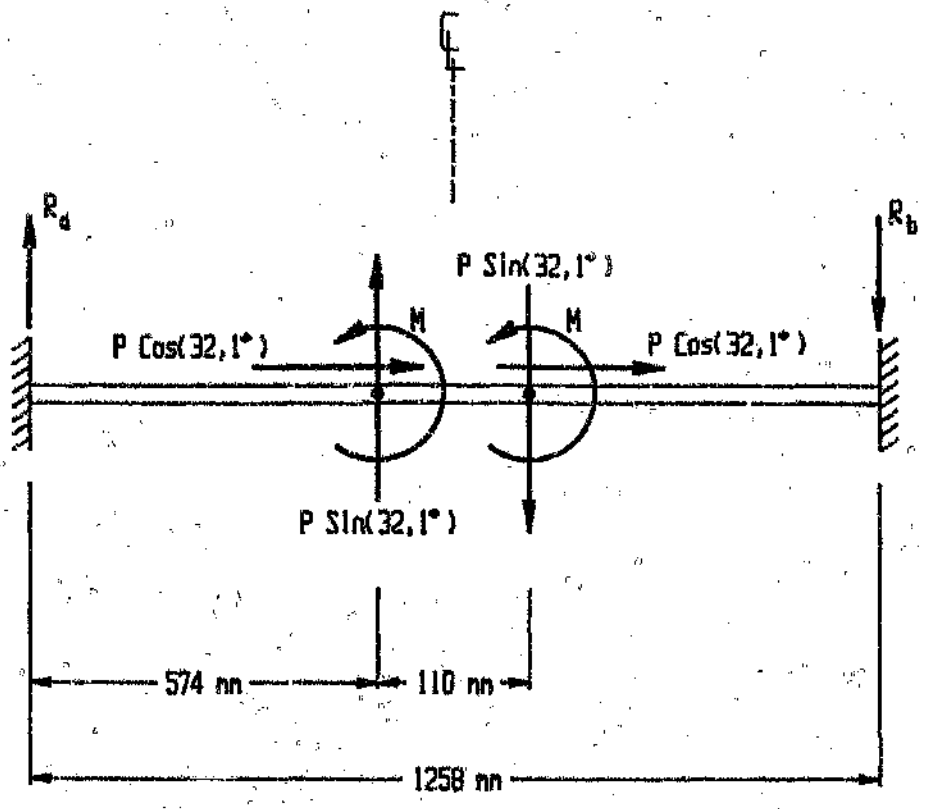

Figure D13 Free body diagram of landing leg cross member

The free and fixing moment diagrams are as presented in Figure D14. By consideration of the final deflected shape and by symmetry, the left and right hand end fixing moments are equal in magnitude and of opposite sign.

Deflection at the centre of the beam is zero. Hence, taking moments of area[43] of the portion of the free and fixing moment diagrams between the centre and right hand end of the beam about the centre of the diagram, the following equation is obtained:

$$M' - 2,693 \text{ kNm} = 0$$

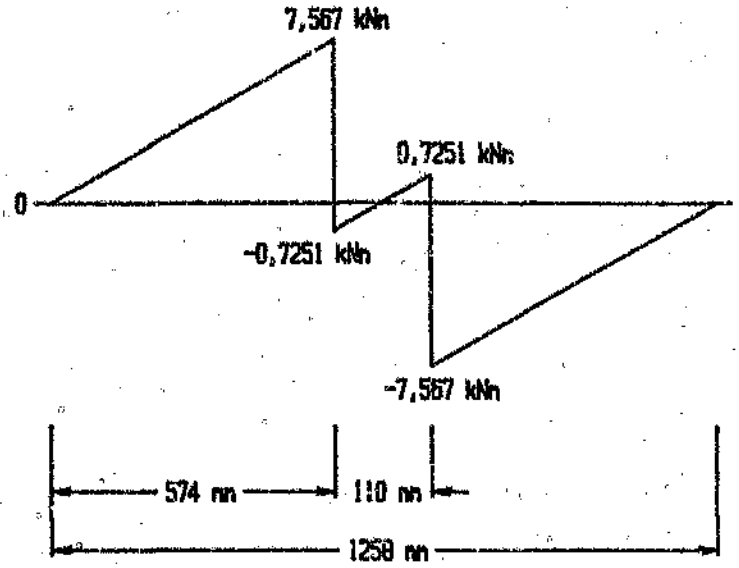

a) Free nonent diagran due to nonents M

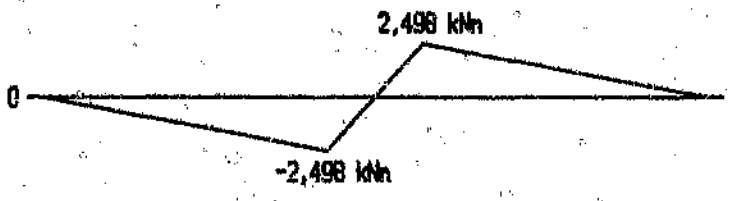

b) Free nonent diagran due to forces (P Sin 32,1°)

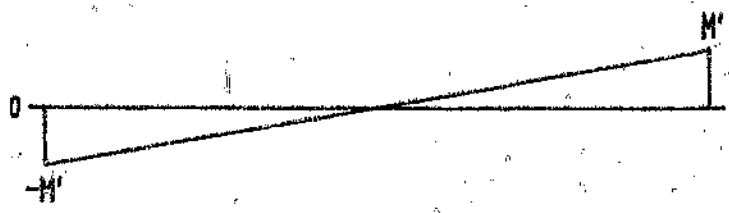

c) Fixing nonent diagran

Figure D14 Free and fixing moment diagrams of landing leg cross member

that is

$M' = 2,693$ kNm

Whence, the total bending moment diagram is as shown in Figure D15.

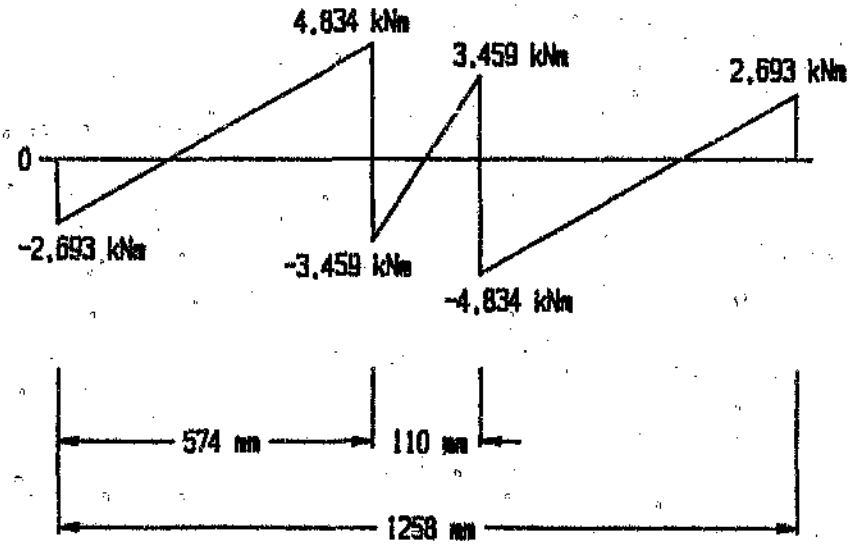

Figure D15 Total bending moment diagram of landing leg cross member

Section properties for the landing leg cross member are:

$I = 4,033 \times 10^6$ mm^4

$y_{max} = 52,5$ mm

Maximum extreme fibre bending stress is then:

$$\sigma_b = \pm\frac{(4,834 \times 10^6)(52,5)}{(4,033 \times 10^6)}$$

$$= \pm 62,93 \text{ MPa}$$

The forces $PCos(32,1^o)$ result in a tensile direct stress in the leftmost 574 mm of the beam, and a compressive direct stress in the rightmost 574 mm which is given by:

$$\sigma_d = \pm\frac{(93676)Cos(32,1^o)}{(2280)}$$

$$= \pm 34,80 \text{ MPa}$$

Hence, the maximum stress in the cross member beam occurs at the extreme fibres at the points of attachment of the cross braces, ie:

$$\sigma_1 = \sigma_b + \sigma_d$$

$$= 62,93 + 34,80$$

$$= 97,73 \text{ MPa}$$

and

$$\sigma_m = \sigma_1 = 97,73 < \sigma_{yt}$$

since, $\sigma_2 = \sigma_3 = 0$

This satisfies the Von Mises failure criterion for no failure. Note, that here $\sigma_{yt} = 110$ MPa in the heat affected zone adjacent to the cross brace bracket welds (refer Section E.1.3 for the D65S alloy).

Taking moments in Figure D13, the support reactions at the ends of the beam are:

$$R_a = -R_b = 8831 \text{ N}$$

The cross sectional area of the welds at the landing leg cross member flanges is shown in Figure D16.

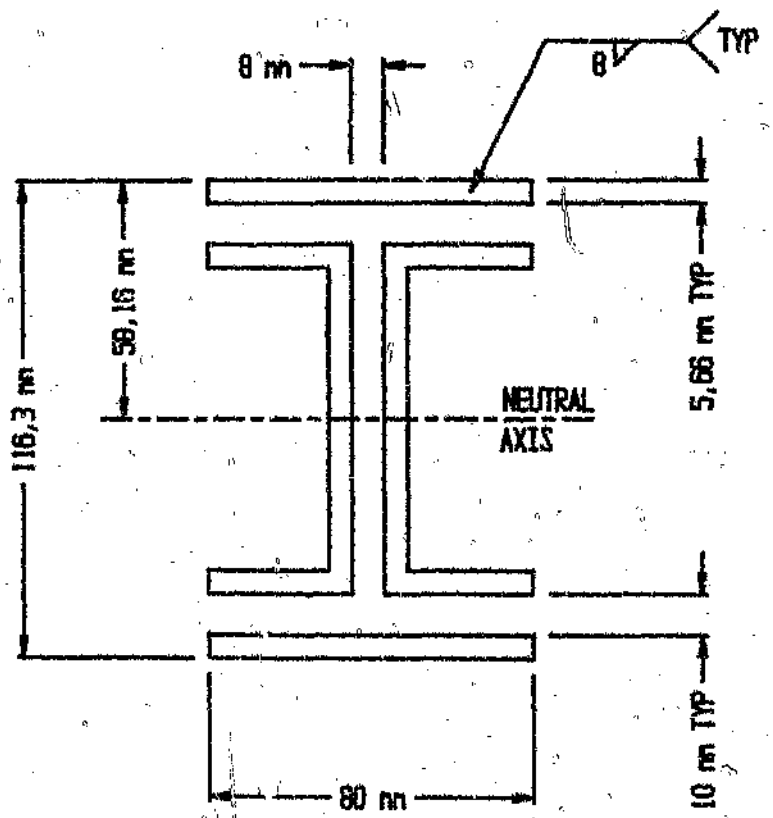

Figure D16 Weld cross section at landing leg cross member flanges

Section properties of the weld area are:

$$y_{max} = 58,16 \text{ MPa}$$

$$I = 4,434 \times 10^6 \text{ mm}^4$$

$$A = 2553 \text{ mm}^2$$

The average weld shear stress is then:

$$\tau = \frac{8831}{2553}$$

$$= 3,46 \text{ MPa}$$

which is significantly less than the minimum ultimate shear strength of the AA 5356 fillet welds (refer Section E.2).

The bending moment on the flange welds is equal to the end fixing moments calculated above, ie:

$$M_f = 2,693 \times 10^6 \text{ Nmm}$$

The extreme fibre bending stress is then given by:

$$\sigma_b = \pm \frac{(2,693 \times 10^6)(58,16)}{(4,434 \times 10^6)}$$

$$= \pm 35,32 \text{ MPa}$$

The longitudinal direct stress on the weld cross section is:

$$\sigma_d = \pm\frac{(93676)Cos(32,1^0)}{(2553)}$$

$$= \pm 31,08 \text{ MPa}$$

For the left hand end of Figure D13, the longitudinal direct stress adds to the tensile bending stress on the flange welds. Thus, the total x-direction stress at this position is:

$$\sigma_x = \sigma_b + \sigma_d$$

$$= 66,40 \text{ MPa}$$

Further, since $\tau = 0$ at the extreme fibres:

$$\sigma_1 = \sigma_x = 66,40 \text{ MPa}$$

and

$$\tau_p = \sigma_x/2 = 33,20 \text{ MPa}$$

Applying the Von Mises failure criterion for $\sigma_2 = \sigma_3 = 0$

$$\sigma_m = \sigma_1 = 66,40 \text{ MPa} < \sigma_{yt}$$

where $\sigma_{yt} = \sigma_{0,2} = 110$ MPa for the D65S and B51S alloys in the weld zone (refer Sections E.1.3 and E.1.4).

D.5 'Hope' king-pin foundation plate

The stresses in the 12,3 mm thick, bolted mounting foundation plate for the 'Hope' anti-jack-knife king-pin (refer Section 4.5.4 and Drawing No. UC-13), due to a horizontal load applied at the king-pin, are checked in

this section at the following positions:

- Bearing stresses at the $18 \times \phi 16$ mm foundation plate mounting bolt holes.
- Thread stresses in the foundation plate at the $8 \times \frac{1}{2}$ inch UNF device mounting bolt holes.

The horizontal load at the king-pin applied here is the same as that used in Section C.5, that is 1235 kN. No vertical loads are imposed on the 'Hope' device.

D.5.1 Bearing stresses

The full horizontal load applied at the king-pin is transferred to the rubbing plate by the eighteen M16 foundation plate bolts. As in Section C.5, assuming that only eighty percent of the bolts are bearing at any time, the total bearing area at the foundation plate bolt holes is:

$$\begin{aligned} A &= (18)(16)(12,3)(0,8) \\ &= 2834 \text{ mm}^2 \end{aligned}$$

Hence, the average bearing stress at the bolt hole is:

$$\begin{aligned} \sigma_B &= \left(\frac{1235 \times 10^3}{2834}\right) \\ &= 435,8 \text{ MPa} \end{aligned}$$

The allowable bearing stress for the ROC-tuf AD690 steel foundation plate material is taken as the 0,2 percent proof stress, ie. $\sigma_{0,2} = 690$ MPa (refer Section E.3).

D.5.2 Thread stresses

The maximum axial load applied to the $8 \times \frac{1}{2}$ inch UNF device mounting bolts, and hence to the threads in the foundation plate, is equal to the bolt preload. Shigley[66] gives an approximate formula for pre-load in terms of the tightening torque:

$$F = \frac{T}{(0,2)d_0}$$

or

$$T = (0,2)Fd_0$$

where

F = preload [lb-force]

T = torque [lb-inch]

d_0 = nominal diameter

= 0,5 inch

(0,2) = Constant

The installation instructions for the Hope device require the eight bolts to be tightened to a torque of 80 lb-ft (960 lb-inch).[59] The resulting preload is then:

F = 9 600 lb-force

= 42807 N

For an internal thread, the threads will shear off on the major diameter, and

so the average thread shear stress[66] is:

$$\tau = \frac{2F}{\pi d_m t}$$

where

d_m = major diameter

$= 12,7$ mm

t = thickness of foundation plate

$= 12,3$ mm

Thus:

$\tau = 174,46$ MPa

Multiplying by a factor of safety of 2:

$\tau = 348,93$ MPa

Allowable shear stress for the ROC-tuf AD 690 steel is 400 MPa minimum (refer Section E.3).

The bearing stress on the threads[66] is:

$$\sigma_B = \frac{-4pF}{\pi t\,(d_m{}^2 - d_r{}^2)}$$

where

p = thread pitch

= 20 threads/inch

= 1,270 mm

d_r = minor diameter

= 11,47 mm

Thus:

$\sigma_B = -189,30$ MPa

Multiplying by a factor of safety of 2:

$\sigma_B = -378,60$ MPa

The allowable compressive stress for ROC-tuf AD690 steel is $\sigma_{0,2} = 690$ MPa (refer Section E.3).

APPENDIX E

MATERIAL SPECIFICATIONS AND MECHANICAL PROPERTIES

E.1 Aluminium Alloys

E.1.1 Anticorodal - 112 aluminium alloy

Origin : 'Alusuisse' - Swiss Aluminium Ltd, Zurich.

In house designation : Anticorodal - 112/61

Aluminium Assoc. Equivalent : AA 6082-T6

Temper : Solution heat treated and artificially aged.

Form used : Main chassis I-beams.

Reference : Alusuisse[15,67]; Alcan[57]

Mechanical Properties - Base Material :

Ultimate tensile strength (σ_{UTS})	=	310 MPa (310 – 370 MPa)
0,2% Proof stress ($\sigma_{0,2}$)	=	260 MPa (260 – 350 MPa)
Ultimate shear strength (τ_{ULT})	=	155 MPa[a]
Shear yield strength (τ_{yi})	=	130 MPa[b]
Modulus of elasticity (E)	=	70 GPa
Shear modulus (G)	=	25 GPa
Elongation, minimum, $A5$	=	9 percent
Hardness, Brinnel HB (typ.)	=	90
Fatigue strength at 10^7 cycles[c]		
– Pulsating strength ($R = 0$)	=	130 MPa
– Alternating strength ($R = -1$)	=	80 MPa
– Alt. bending strength ($R = -1$)	=	80 MPa

Mechanical Properties - Welded Condition :

Ultimate tensile strength (σ_{UTS})	=	170 MPa
0,2% Proof stress ($\sigma_{0,2}$)	=	110 MPa
Ultimate shear strength (τ_{ULT})	=	95 MPa
Shear yield strength (τ_{yi})	=	65 MPa[d]

(a) Based on 50 percent of σ_{UTS}

(b) Based on 50 percent of $\sigma_{0,2}$

(c) Typical values.

(d) Based on 50 percent of equivalent base material property. S-Al Si 5 filler allow (DIN 1732). These properties apply to the weldment and to the base material within 25 mm of the weld.

Unless otherwise specified all properties are minimum guaranteed values. Expected ranges are given in parentheses.

E.1.2 Anticorodal - 100 aluminium alloy

Origin : 'Alusuisse' - Swiss Aluminium Ltd, Zurich.

In house designation : Anticorodal - 100/61

Aluminium Assoc. Equivalent : AA 6081-T6

Temper : Solution heat treated and artificially aged.

Form used : Deck planks; deck clamp section.

Reference : Alusuisse[15,67]; Alcan[57]

Mechanical Properties - Base Material :

Ultimate tensile strength (σ_{UTS})	=	310 MPa (310 – 370 MPa)
0,2% Proof stress ($\sigma_{0,2}$)	=	260 MPa (260 – 350 MPa)
Ultimate shear strength (τ_{ULT})	=	155 MPa[a]
Shear yield strength (τ_{yi})	=	130 MPa[b]
Modulus of elasticity (E)	=	70 GPa
Shear modulus (G)	=	25 GPa
Elongation, minimum, $A5$	=	10 percent
Hardness, Brinnel HB (typ.)	=	100
Fatigue strength at 10^7 cycles[c]		
– Pulsating strength ($R = 0$)	=	130 MPa
– Alternating strength ($R = -1$)	=	80 MPa
– Alt. bending strength ($R = -1$)	=	80 MPa

Mechanical Properties - Welded Condition :

Ultimate tensile strength (σ_{UTS})	=	170 MPa
0,2% Proof stress ($\sigma_{0,2}$)	=	110 MPa
Ultimate shear strength (τ_{ULT})	=	95 MPa
Shear yield strength (τ_{yi})	=	65 MPa[d]

(a) Based on 50 percent of σ_{UTS}

(b) Based on 50 percent of $\sigma_{0,2}$

(c) Typical values.

(d) Based on 50 percent of equivalent base material property. S-Al Si 5 filler alloy (DIN 1732). These properties apply to the weldment and to the base material within 25 mm of the weld.

Unless otherwise specified all properties are minimum guaranteed values. Expected ranges are given in parentheses.

E.1.3 D65S aluminium alloy

Origin : Huletts Aluminium Ltd, SA.

In house designation : D65S - TF

Aluminium Assoc. Equivalent : AA 6261-T6[a]

Temper : Solution heat treated and subsequently precipitation treated.

Form used : Extrusions.

Reference : Huletts;[10,20] Alcan[9]

Mechanical Properties - Base Material :

Ultimate tensile strength (σ_{UTS})	=	295 MPa (295 – 330 MPa)
0,2% Proof stress ($\sigma_{0,2}$)	=	255 MPa (255 – 315 MPa)
Bearing strength (σ_B)	=	552 MPa
Ultimate shear strength (τ_{ULT})	=	165 MPa
Shear yield strength (τ_{yi})	=	138 MPa
Modulus of elasticity (E)	=	69 GPa
Shear modulus (G)	=	26 GPa
Elongation, minimum, $A5$	=	7 percent
Hardness, Brinnel HB (typ.)	=	95

Mechanical Properties - Welded Condition :[b]

Ultimate tensile strength (σ_{UTS})	=	165 MPa
0,2% Proof stress ($\sigma_{0,2}$)	=	110 MPa
Ultimate shear strength (τ_{ULT})	=	103 MPa
Shear yield strength (τ_{yi})	=	69 MPa

(a) For chemical composition only.

(b) These properties apply to the weldment and to the base material within 25 mm of the weld. AA 5356 filler alloy.

Unless otherwise specified all properties are minimum guaranteed values. Expected ranges are given in parentheses.

E.1.4 B51S aluminium alloy

Origin : Huletts Aluminium Ltd, SA.

In house designation : B51S - TF

Aluminium Assoc. Equivalent : AA 6351-T6

Temper : Solution heat treated and subsequently precipitation treated.

Form used : Plate.

Reference : Huletts;[10,20] Alcan[9]

Mechanical Properties - Base Material :

Ultimate tensile strength (σ_{UTS})	=	295 MPa (295 – 330 MPa)
0,2% Proof stress ($\sigma_{0,2}$)	=	255 MPa (255 – 315 MPa)
Bearing strength (σ_B)	=	607 MPa
Ultimate shear strength (τ_{ULT})	=	172 MPa
Shear yield strength (τ_{yi})	=	145 MPa
Modulus of elasticity (E)	=	69 GPa
Shear modulus (G)	=	26 GPa
Elongation, minimum, $A5$	=	8 percent
Hardness, Brinnel HB (typ.)	=	95

Mechanical Properties - Welded Condition :[a]

Ultimate tensile strength (σ_{UTS})	=	165 MPa
0,2% Proof stress ($\sigma_{0,2}$)	=	110 MPa
Ultimate shear strength (τ_{ULT})	=	103 MPa
Shear yield strength (τ_{yi})	=	69 MPa

(a) These properties apply to the weldment and to the base material within 25 mm of the weld. AA 5356 filler alloy.

Unless otherwise specified all properties are minimum guaranteed values. Expected ranges are given in parentheses.

E.1.5 D54S aluminium alloy

Origin : Huletts Aluminium Ltd, SA.

In house designation : D54S - H2

Aluminium Assoc. Equivalent : AA 5083 - H2

Temper : Strain hardened and partially annealed.

Form used : Plate.

Reference : Huletts;[10,20] Alcan[9]

Mechanical Properties - Base Material :

Ultimate tensile strength (σ_{UTS})	=	310 MPa (310 – 375 MPa)
0,2% Proof stress ($\sigma_{0,2}$)	=	235 MPa (235 – 250 MPa)
Ultimate shear strength (τ_{ULT})	=	179 MPa
Shear yield strength (τ_{yi})	=	138 MPa
Modulus of elasticity (E)	=	69 GPa
Shear modulus (G)	=	26 GPa
Elongation, minimum, $A5$	=	8 percent

Mechanical Properties - Welded Condition :[a]

Ultimate tensile strength (σ_{UTS})	=	262 MPa
0,2% Proof stress ($\sigma_{0,2}$)	=	124 MPa
Ultimate shear strength (τ_{ULT})	=	159 MPa
Shear yield strength (τ_{yi})	=	76 MPa

(a) These properties apply to the weldment and to the base material within 25 mm of the weld. AA 5356 filler alloy.

Unless otherwise specified all properties are minimum guaranteed values.

Expected ranges are given in parentheses.

E.2 Filler alloys - aluminium welds

The combinations of parent alloys welded together in the construction of the semi-trailer and the filler alloys used are presented in Table E1.

Table E1 Weld parent alloy combinations and filler alloys

Parent alloy combination	Filler alloy	Application
Anticorodal – 112/ Anticorodal – 112	*S/AlSi5* (*DIN* 1732)	Main chassis I-beam web/flange welds
Anticorodal – 112/ *D65S – TF*	*AA* 5356	Various
Anticorodal – 112/ *B51S – TF*	*AA* 5356	Various
Anticorodal – 112/ *D65S – TF*	*AA* 5356	Deck cover angle
D65S – TF/D65S – TF	*AA* 5356	Various
D65S – TF/B51S – TF	*AA* 5356	Various
D65S – TF/D54S – H2	*AA* 5356	Various
B51S – TF/B51S – TF	*AA* 5356	Various
B51S – TF/D54S – TF	*AA* 5356	Light box mounting
D54S – TF/D54S – HS	*AA* 5356	Light boxes

The strength of a butt weld is usually dictated by the welded strength of the parent alloy[9] (refer Section E.1). The shear strength of fillet welds, however, is usually governed by the filler alloy. The ultimate shear stress for fillet welds of *AA* 5356 filler alloy are given for longitudinal and transverse loading in Figure E1 below.[9]



Transverse
$\tau_{ULT} = 165$ MPa

Longitudinal
$\tau_{ULT} = 124$ MPa

Figure E1 Strength of fillet welds for *AA* 5356 filler alloy

As a general rule, the mechanical properties of heat-treatable alloys in the TF condition will drop to those in the TB condition, but the properties of material welded in the TB condition will be substantially unaltered.[10] Welding non-heat-treatable alloys, on the other hand, will reduce the mechanical properties in the heat affected zone to those of the annealed condition irrespective of the original temper.

E.3 ROC-tuf AD690 steel

Origin : ISCOR Ltd.

In house designation : ROC-tuf AD690 alloy steel
(roller quenched and tempered)

Application : 'Hope' anti-jack-knife device foundation plate

Reference : Van Rheenen and Nichols;[68] Iscor.[69]

Mechanical Properties :

Ultimate tensile strength (σ_{UTS})	=	790 MPa (790 – 930MPa)
0,2% Proof stress ($\sigma_{0,2}$)	=	690 MPa
Ultimate shear strength (τ_{ULT})	=	518 MPa
Shear yield strength (τ_{yi})	=	400 MPa
Modulus of elasticity (E)	=	200 GPa
Elongation, min. in 50 mm	=	18 percent
Hardness, HB (typ.)	=	235/293

Unless otherwise specified all properties are minimum guaranteed values.

E.4 BS4360 - Gd 43A steel

Origin : ISCOR Ltd.

Designation : BS 4360 - Grade 43 A

(Weldable structural steel)

Application : Suspension mounting plates.

Reference : Iscor;[69] British Standards.[70]

Mechanical Properties :

Ultimate tensile strength (σ_{UTS})	=	430 MPa (430 – 510 MPa)
Yield strength (σ_{yi})	=	220 MPa (220 – 280 MPa)
Ultimate shear strength (τ_{ULT})	=	215 MPa[a]
Shear yield strength (τ_{yi})	=	110 MPa[b]
Elongation (min)	=	20 percent

(a) Based on 50 percent of σ_{UTS}

(b) Based on 50 percent of σ_{yi}

All properties are minimum guaranteed values. Expected ranges are given in parentheses.

E.5 Nuts, Bolts, and Washers

The proof loads and tightening torques for all of the nuts and bolts used in the construction of the semi-trailer are presented in Tables E2 and E3. Grade 8 nuts and grade 8.8 bolts are used throughout. Minimum mechanical properties are:[6,71]

Ultimate tensile strength (σ_{UTS}) = 800 MPa

0,2% Proof stress ($\sigma_{0,2}$) = 640 MPa

All nuts, bolts and washers are either zinc or cadmium plated as protection against corrosion.

Table E2 Nut and bolt proof loads[6]

	Proof Loads (kN)				
Bolt size	**M10**	**M12**	**M14**	**M16**	**M20**
Gd. 8.8 bolt	33,2	48,2	65,6	89,7	140,3
Gd. 8 nut	45,5	66,1	90,3	123,6	192,3

Table E3 Bolt tightening torques[6,71]

	Torque (Nm)				
Bolt size	**M10**	**M12**	**M14**	**M16**	**M20**
Torque to induce load equal to 65% of Proof load	51,7	90,2	143,3	223,8	437,7

APPENDIX F

SEMI-TRAILER BRAKE SYSTEM

F.1 General

As discussed in Section 4.7, the semi-trailer brake system is designed to meet all requirements of SABS SV 1051:1980 – 'Motor vehicle safety specification for braking'.[24] This appendix presents all design and compatibility calculations for the trailer brake system as required by that specification, as well as other relevant calculations.

The pneumatic circuit diagram for the brake system and related pneumatic circuit diagrams are to be found in Drawing series PM-01 to PM-03 in Appendix H.

F.2 Available braking forces

As discussed in Section 4.7.2, the maximum coupling pressure in the service brake line is assumed to be 650 kPa and the threshold pressure, as measured at the coupling head, is assumed to be constant and equal to 50 kPa. This results in a maximum brake chamber pressure of 600 kPa.

The effective area of the service chamber of the type 24/30 spring brake chambers is:[55]

$$A = 14\,314 \quad \text{mm}^2$$

Hence, the pushrod force at 600 kPa brake chamber pressure is:

$$F_p = (14\,314)(600 \times 10^{-3})$$

$$= 8\,588 \text{ N}$$

The slack adjuster lever lengths for the FIA steering axles and for the Henred Propar 11 000 fixed axle are 145 mm and 152 mm respectively. The torque on the s-cam shafts is then:

$T_s = 1,245 \times 10^6$ Nmm — steering axles

$T_s = 1,305 \times 10^6$ Nmm — fixed axle

The brake ratio (ie. ratio of braking torque on wheel to input torque at the camshaft) for the Henred Fruehauf 420 × 160 mm brake is 11.[72] This results in braking torques at each foundation brake of:

$T_b = 1,370 \times 10^7$ Nmm — steering axles

$T_b = 1,436 \times 10^7$ Nmm — fixed axle

For a tyre radius of 561 mm the braking forces per axle are thus:

$F_b = 48\,836$ N — steering axles

$F_b = 51\,194$ N — fixed axle

Summing these forces over the full semi-trailer tri-axle bogie, the total available braking force at the road surface is:

$F_t = 148\,866$ N

This total braking force exceeds 45 percent of the maximum weight borne by the wheels of the trailer when stationary (ie. 23 100 kg or 226 611 N). The service braking system of the semi-trailer thus meets the minimum performance requirements of SABS SV 1051 for Category O_4 vehicles.

Dividing the total available braking force by the 600 kPa brake chamber

pressure, the total available braking force per unit pressure is:

$f_t = 248,1$ N/kPa

F.3 Compatibility curves

The laden and unladen compatibility bands are constructed by multiplying the upper and lower boundaries given in SAVS SV 1051 - Part VI by the k_c (laden) and k_v (unladen) correction factors, respectively (refer Graphs F1 and F2). The k_c and k_v correction factors are given by the following equation:

$$k_{c,v} = \left[1,7 - \frac{(0,7)R_2}{(R_2)_{max}}\right]\left[1,35 - \frac{0,96}{WS}\left(1,0 + (h_1 - 1,2)\frac{P_t}{R_2}\right)\right]$$

$$- \left[1,0 - \frac{R_2}{(R_2)_{max}}\right]\left[\frac{h_1 - 1,0}{2,5}\right]$$

where

P_t = gross weight of the trailer [N]

R_2 = total normal static reaction of the road surface on the wheels of the semi-trailer [N]

$(R_2)_{max}$ = value of R_2 at the maximum weight of the semi-trailer [N]

WS = wheelbase of semi-trailer [m]

h_1 = height above ground of centre of gravity of the semi-trailer and payload [m]

The laden and unladen data are (refer Figure 2.1 and Figure A1):

		Laden	Unladen
P_t (N)	=	359 831	65 531
R_2 (N)	=	226 611	51 826
$(R_2)_{max}$ (N)	=	226 611	226 611
WS (m)	=	8,924	8,924
h_1 (m)	=	2,47	0,96

Whence:

$k_c = 1,025$

$k_v = 2,087$

and

		Laden	Unladen
$z = \frac{F_t}{R_2}$ at 450 kPa	– max. limit	0,420	0,856
	– min. limit	0,297	0,605
$z = \frac{F_t}{R_2}$ at 750 kPa	– max. limit	0,666	1,357
	– min. limit	0,461	0,939

The load-sensing valve ratios selected for the laden and unladen conditions are 1,2 and 2,7 respectively. Note that load sensing is incorporated in the laden condition (ie. maximum legal payload) in order to allow a factor of safety in the event of the trailer being overloaded (refer Section 4.7.3).

From Section F.2, the total available braking force per unit pressure at the

road surface is:

$$f_t = 248,1 \text{ N/kPa}$$

Hence, the load sensed braking ratios at 650 kPa coupling pressure (600 kPa brake chamber pressure) are:

$$\text{Laden :} \quad z = \frac{F_t}{R_2}$$
$$= \frac{(248,1)(650-50)}{(226\,611)(1,2)}$$
$$= 0,547$$

$$\text{Unladen :} \quad z = \frac{F_t}{R_2}$$
$$= \frac{(248,1)(650-50)}{(51\,826)(2,7)}$$
$$= 1,064$$

The laden and unladen compatibility curves are shown in Graphs F1 and F2 respectively.

F.4 Load-sensing valve settings

As was previously mentioned (refer Section F), load-sensing is incorporated in the legal laden condition. The load-sensing valve is therefore adjusted for a correspondingly higher laden condition so as to achieve the required load-sensing ratio in the legal laden condition. The tri-axle bogie load corresponding to this maximum laden condition (hereafter referred to as the laden condition as opposed to the legal laden condition) is determined proportionately (refer Figure F1), ie:

$$(R_2)_x = 25\,476 \text{ kg}$$

Graph F1 Braking compatibility curve - Laden

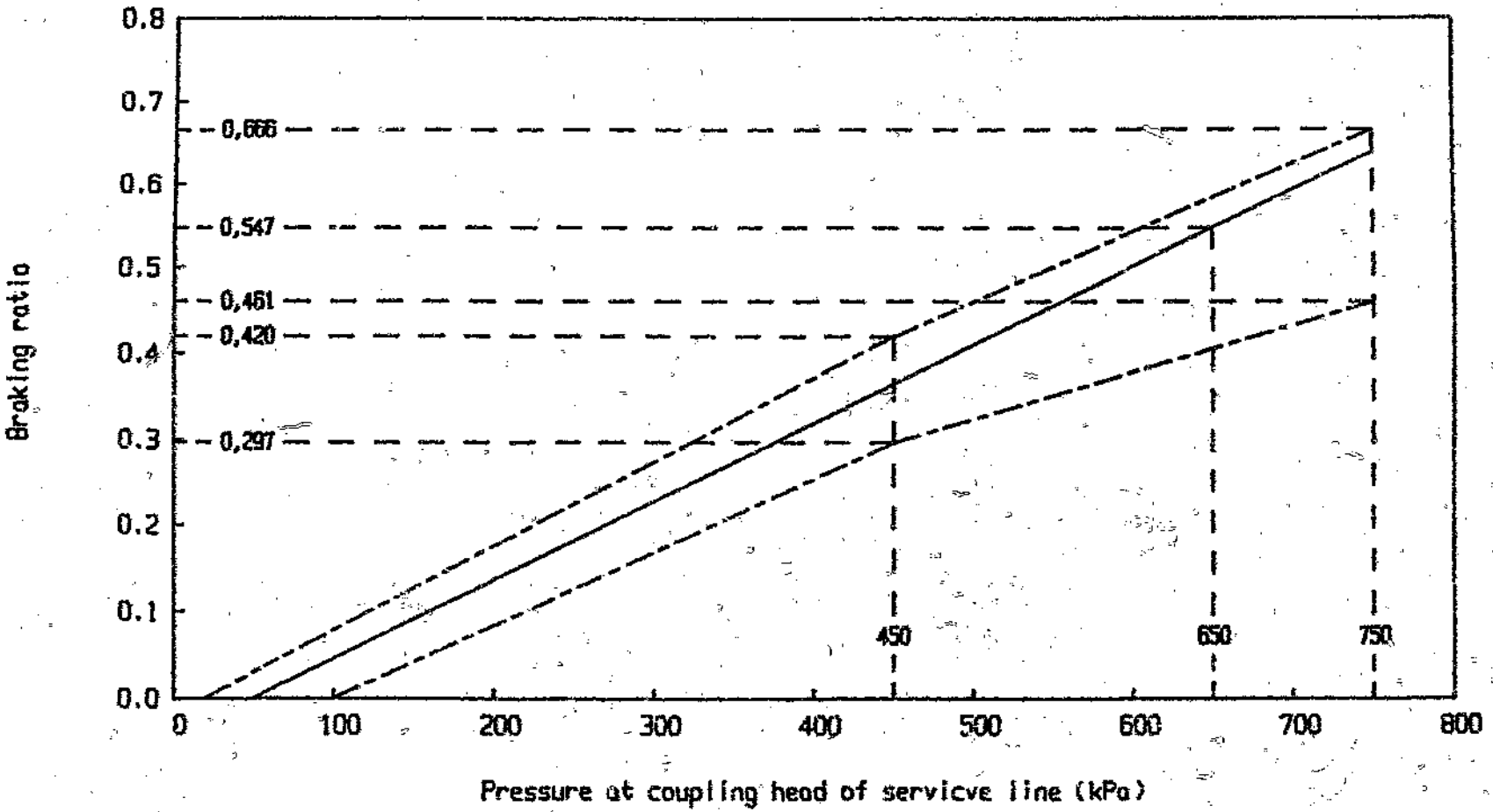

Graph F2 Braking compatibility curve - Unladen

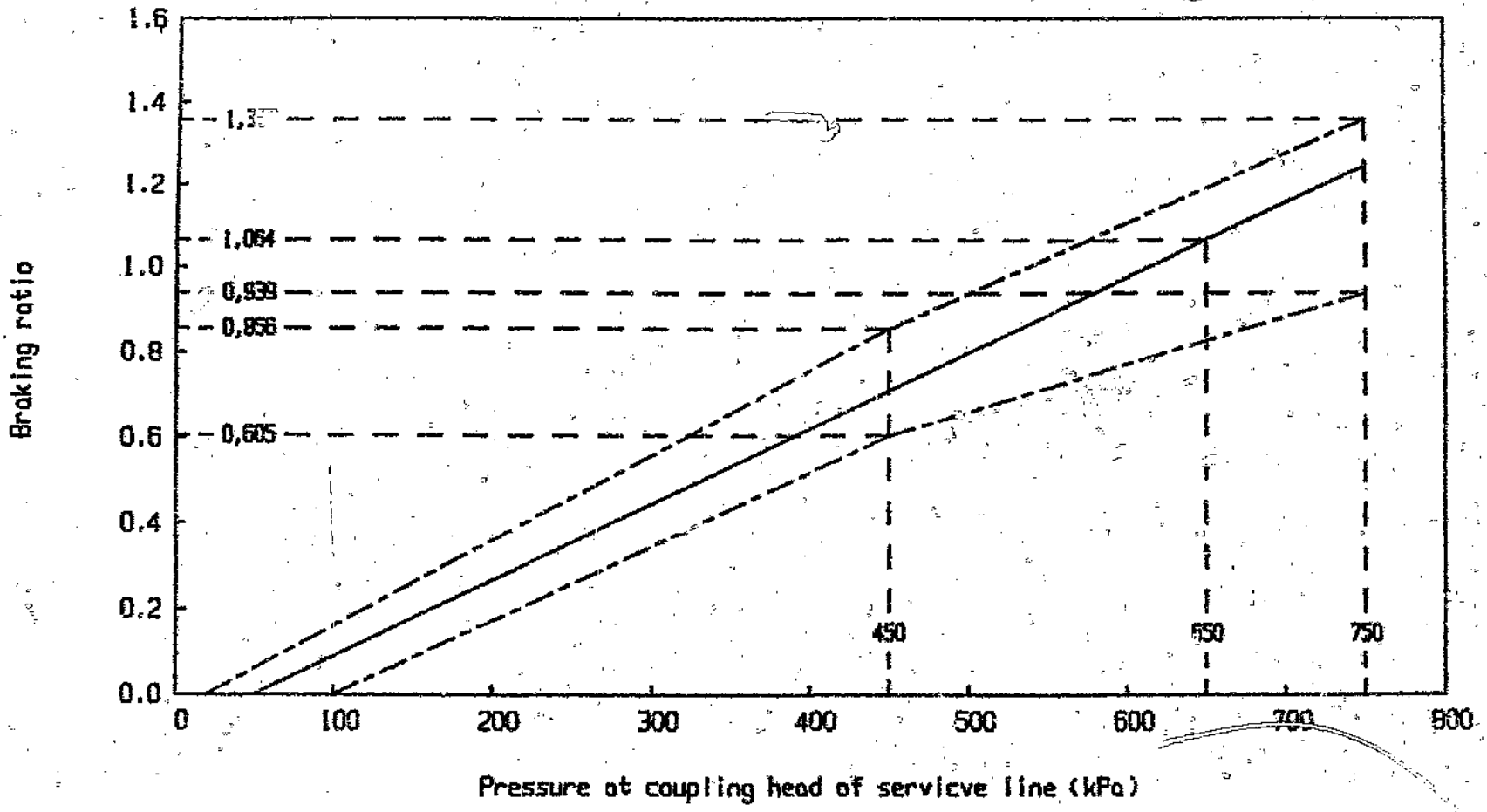

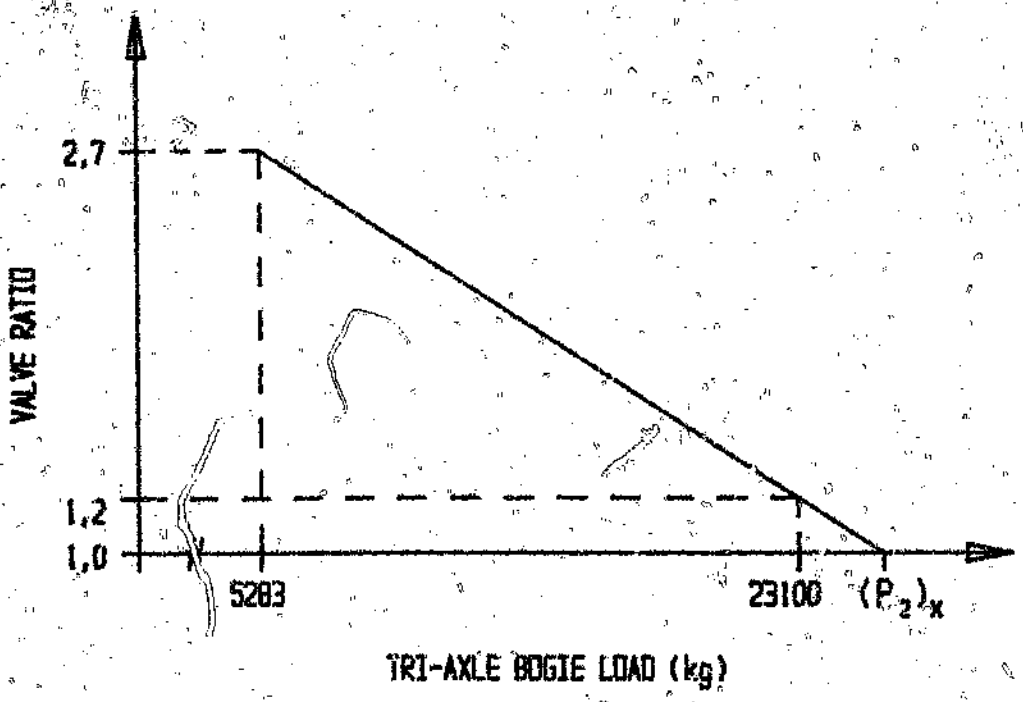

Figure F1 Load-sensing valve ratio as a function of tri-axle bogie load

For each loading condition the total load imposed on the suspension is equal to the tri-axle bogie load minus the unsprung mass (ie. axles, wheels, brakes, tyres, etc.). The total unsprung mass for the full tri-axle bogie is 3 240 kg (refer Figure 2.1). The resultant suspension air bag pressures required to sustain these loads are determined from Figure F2 and are presented in Table F1. Note that the suspension ride height of 514 mm on Drawing No. SS-01 results in an air bag design height of 420 mm or 16,5 inches.

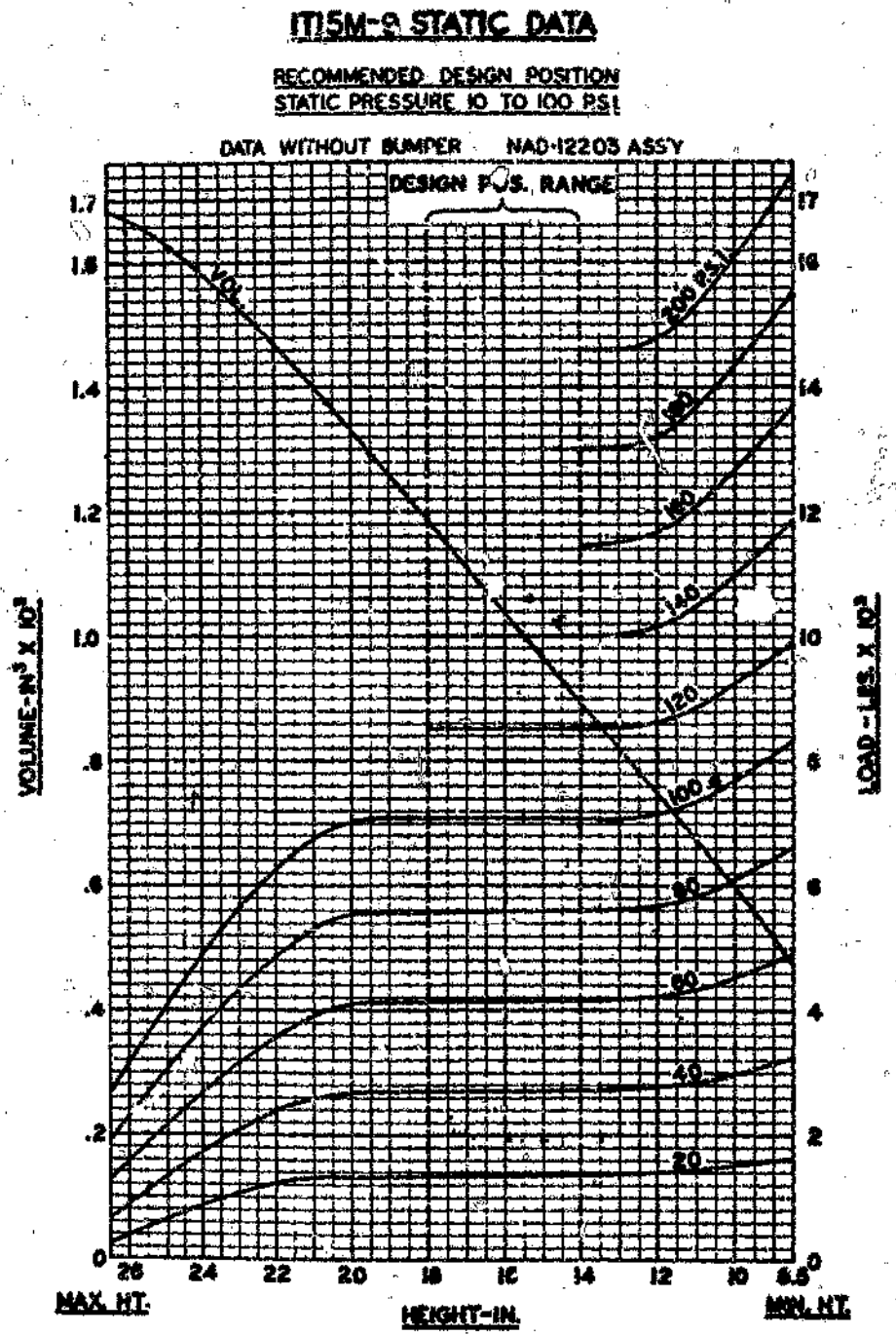

Figure F2 Design curves for 'Firestone' IT15-9 air bag used on 'Fruehauf T' air suspension[73]

Table F1 Suspension air-bag pressures for laden and unladen conditions

Load condition	Total load on suspension		Average load per air bag		Air bellows pressure	
	kg	lb	kg	lb	bar	psi
Unladen	2043	4504	191	420	0,488	7,08
Legal laden	19860	43784	1852	4083	4,02	58,3
Max. laden	22236	49022	2074	4572	4,49	65,1

The 'Wabco' automatic load-sensing valve (model 475 700 220 0) used on the trailer braking system is shown in Figure F3. As is the case with most load-sensing valves for use with pneumatic suspensions, this valve controls the service brake pressure as a function of air suspension pressure and consequently of axle load.

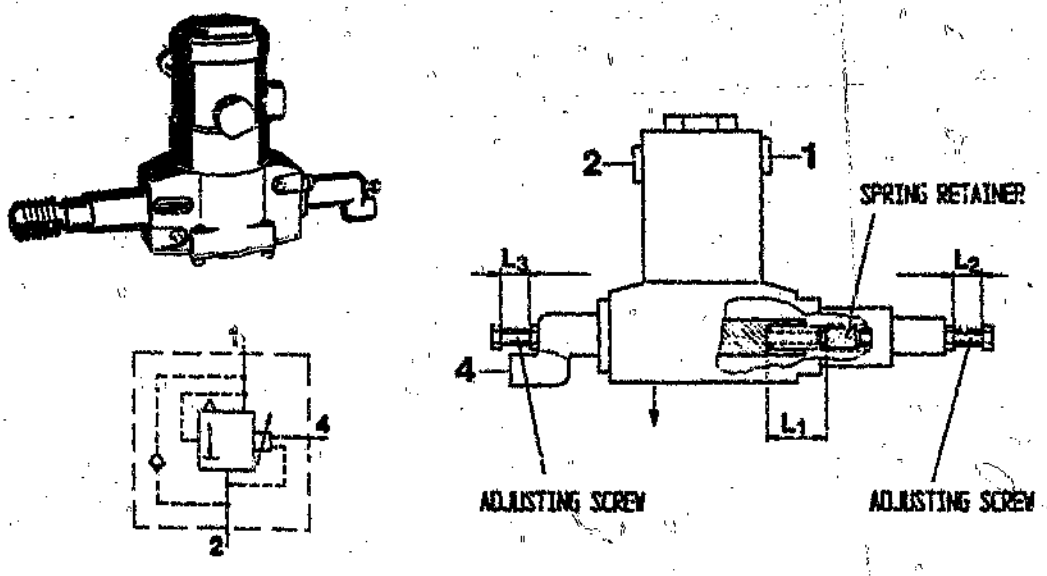

Figure F3 'Wabco' automatic load-sensing valve (model 475 700 220 0)

The device is adjusted to suit the range of air bag pressures encountered (Table F1) by selecting the correct spring and adjusting screws and setting them at the dimensions determined from the two valve nomograms, ie. Figures F4 and F5. To determine these setting dimensions, the following information is required:

- Brake cyl. pressure - laden (max. brake chamber pressure - Section F.1) = 6,00 bar
- Brake cyl. pressure - unladen = 2,22 bar
- Air bag pressure - unladen = 0,488 bar
- Air bag pressure - laden = 4,488 bar
- Air bag pressure difference (laden - unladen) = 4,000 bar

Using nomograph I (Figure F4) the correct spring and its adjusted length are determined, ie:

$L_1 = 110,8$ mm (Spring 896 032 530 1)

L_2 and L_3 are determined using nomograph II (Figure F5), ie:

$L_2 = 39,0$ mm (Hexagon head screw 891 201 020 2)

and

$L_3 = 20,3$ mm

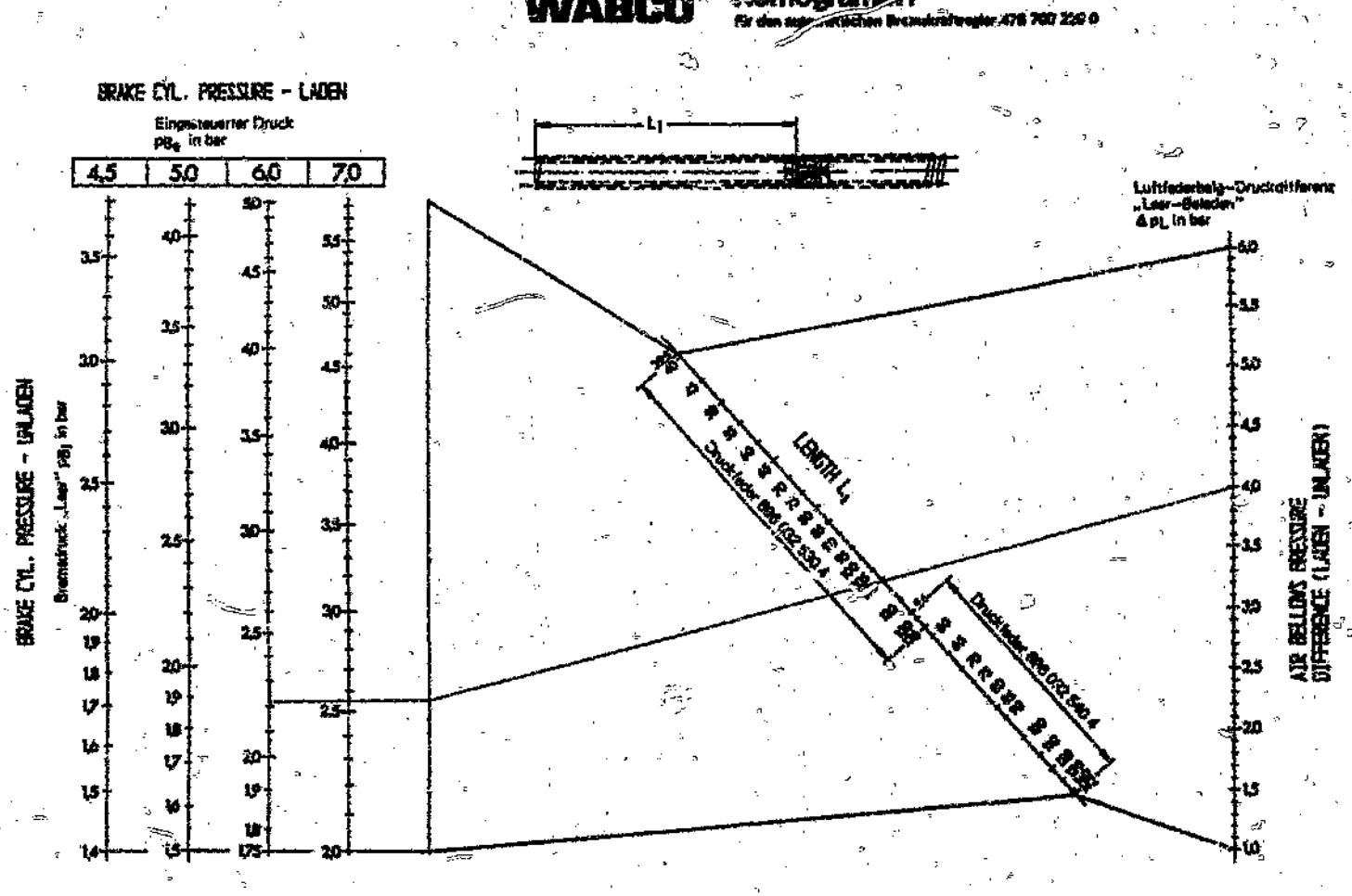

Figure F4 Nomogram I for 'Wabco' load-sensing valve

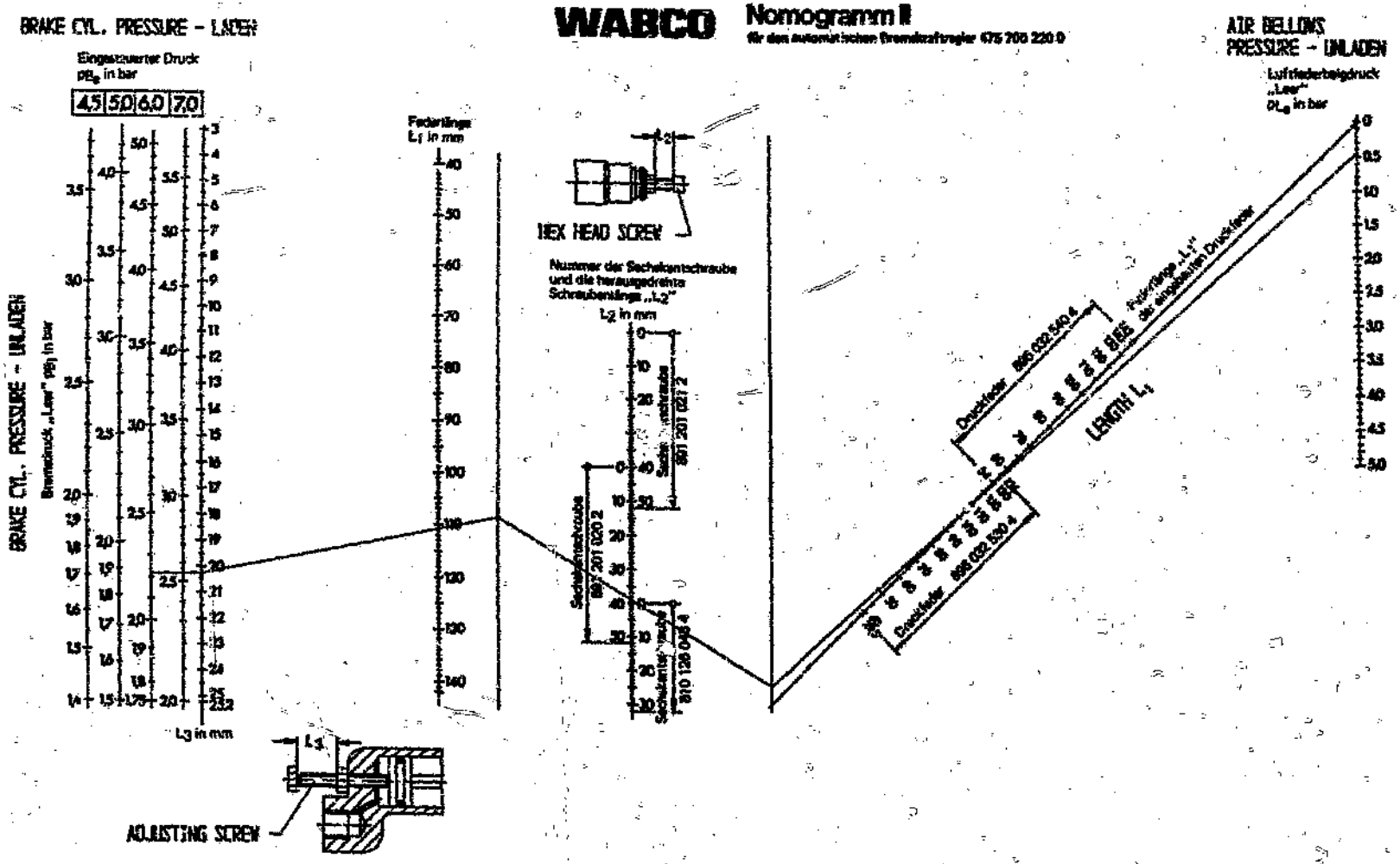

Figure F5 Nomogram II for 'Wabco' load-sensing valve

F.5 Parking brake

The semi-trailer parking brake is provided by means of the emergency spring brake cylinders on all three trailer axles (refer Drawing No. PM-01, Appendix H).

Figure F6[74] shows the spring force curve for the 24/30 spring brakes as a function of push rod stroke. Note that an Anchorlok spring force curve has been used here because no spring force curve was available from Diesel Electric SA (Pty) Ltd for the 24/30 spring brake cylinders supplied. This was, however, deemed acceptable since a review of a number of spring brake cylinders on the SA market by Henred Fruehauf Trailers (Pty) Ltd has indicated very similar spring force curves.[72] In this calculation, spring force is computed for half of maximum push rod stroke in order to allow a factor of safety for maladjusted brakes.

From Figure F6, the spring force at half maximum stroke (ie. 28,5 mm) is approximately:

$$F_s = 6\,400 \text{ N}$$

Thus, for the steering axles (145 mm lever), the s-cam torque is:

$$T_s = 9,280 \times 10^5 \text{ Nmm}$$

and for the fixed axle (152 mm lever)

$$T_s = 9,728 \times 10^5 \text{ Nmm}$$

Multiplying by the brake ratio of 11 (refer Section F2), the braking torques

per wheel are:

$T_b = 1,021 \times 10^7$ Nmm — steering axles

$T_b = 1,070 \times 10^7$ Nmm — fixed axle

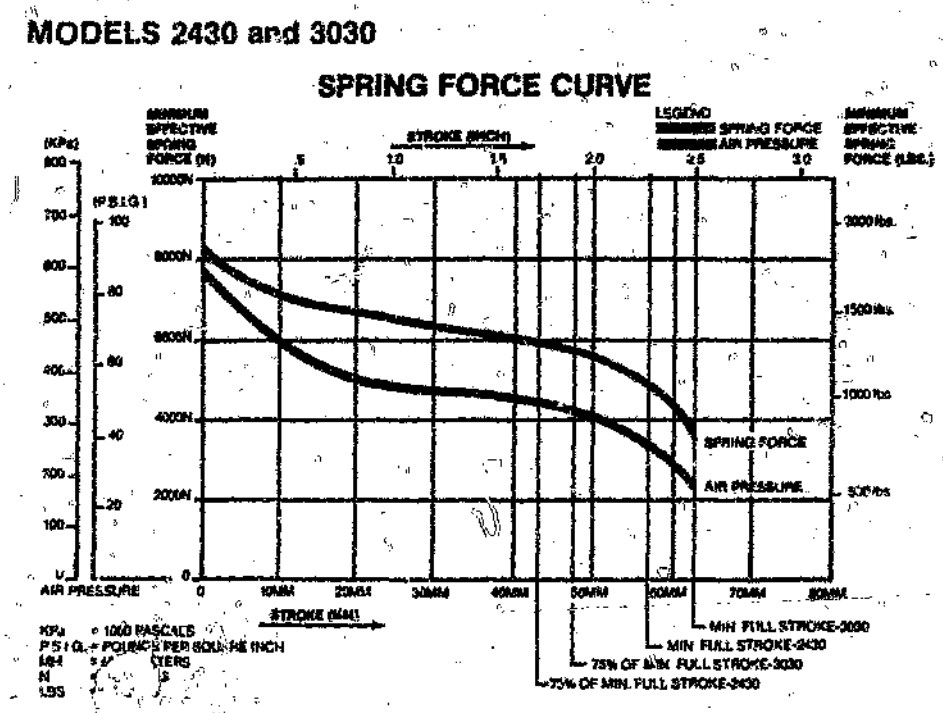

Figure F6 Spring force curve for Type 24/30 spring brake[74]

Dividing by 561 mm tyre radius, braking forces for each wheel are:

$F_b = 18196$ N — steering axles

$F_b = 19075$ N — fixed axle

Summing over the full tri-axle trailer bogie, the total available braking force at the road surface is:

$F_t = 110934$ N

SABS SV 1051 - Part I requires that the parking brake be capable of holding the fully laden vehicle stationary on an 18 percent gradient (ie. a slope of 1 in 5,556 or 10,20 degrees).

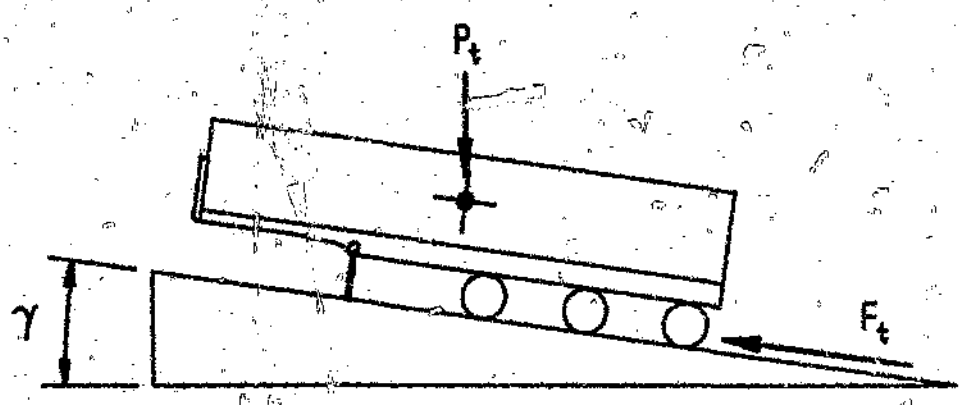

Figure F7 Maximum gradient for trailer park brake

With reference to Figure F7:

$$P_t Sin\gamma = F_t$$

that is

$$Sin\gamma = \frac{F_t}{P_t}$$

From Figure 2.1 in Chapter 2:

$P_t = 36680$ kg

$= 359831$ N

Thus:

$\gamma = 17,96°$

ie. a 32,4 percent gradient.

F.6 Required brake reservoir capacity

Figure F8 shows a simplified diagrammatic representation of the semi-trailer service brake system and reservoir. In Case A the system is charged to the maximum operating pressure (ie. $p_0 = 6,5$ bar) and is isolated from any compressed air supply. The relay valve is closed and the pressure in the service brake chambers is zero (gauge). Volume V_r is the reservoir volume.

During brake application (Case B), compressed air is released to the brake chambers and the overall system pressure reduces to p_1. The total volume V_t is then given by:

$V_t = V_r +$ volume of air in brake chambers + volume of air in service lines

$= V_r + V_c + V_s$

Note that V_c is calculated for half the maximum stroke of the service brake chambers. This allows for a certain factor of safety over the usual one-third of maximum stroke adjustment position.

When the brakes are released, the air in the brake chambers is exhausted and the pressure in the reservoir remains at p_1. Assuming that the air behaves as an ideal gas and that there is no temperature change:

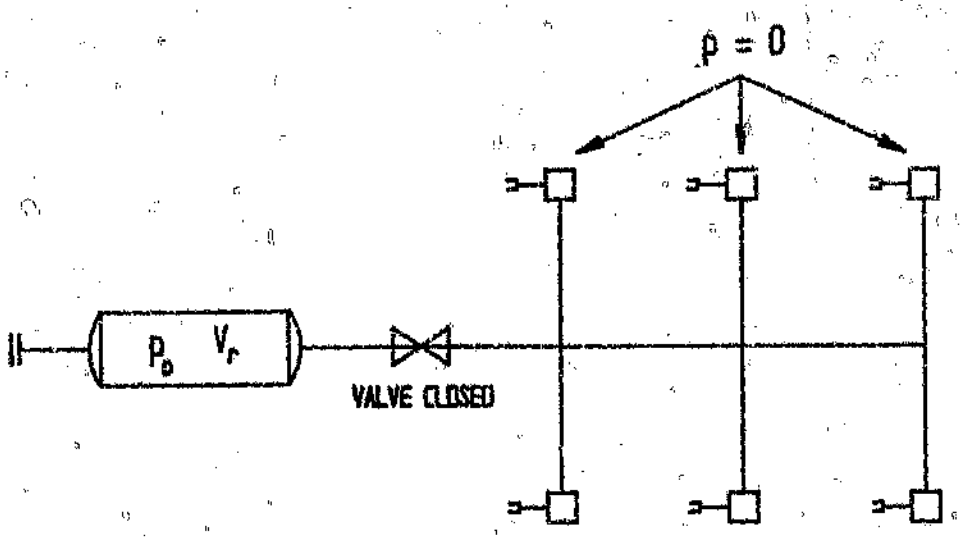

Case A – Before brake application

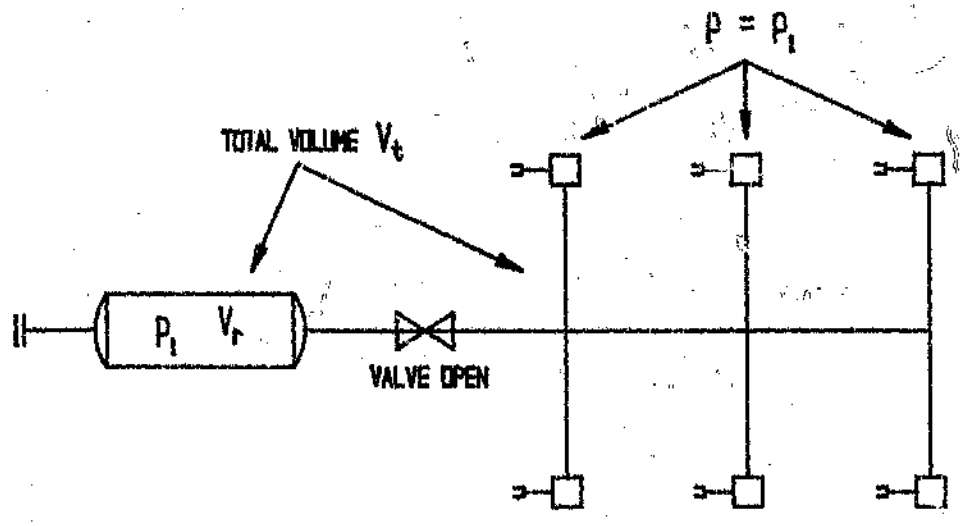

Case B – During brake application

Figure F8 Simplified schematic representation of semi-trailer service brake system

$$p_0 V_r = p_1 V_t$$

$$= p_1(V_r + V_c + V_s)$$

that is

$$p_1 = p_0 \left(\frac{V_r}{V_r + V_c + V_s} \right)$$

Similarly, after a second brake application:

$$p_1 V_r = p_2(V_r + V_c + V_s)$$

and after n brake applications

$$p_{n-1} V_r = p_n(V_r + V_c + V_s)$$

Hence:

$$p_n = p_0 \left(\frac{V_r}{V_r + V_c + V_s} \right)^n$$

Now, SABS SV 1051 : Part III – 1980 requires that the capacity of the air reservoirs in a trailer brake system be such that, when the system has been charged to the maximum operating pressure and then isolated from any external supply of air, the level of the energy produced in the trailer brake chambers on the ninth application of the service brake control is at least fifty percent of that attained on the first application, ie:

$$p_9 \geq \frac{p_1}{2}$$

Substituting:

$$p_0\left(\frac{V_r}{V_r+V_c+V_s}\right)^\gamma \geq \frac{p_0}{2}\left(\frac{V_r}{V_r+V_c+V_s}\right)$$

and simplifying

$$\left(\frac{V_r}{V_r+V_c+V_s}\right) \geq \left(\frac{1}{2}\right)^{\frac{1}{\gamma}}$$

that is

$$V_r \geq \frac{(V_c+V_s)\left(\frac{1}{2}\right)^{\frac{1}{\gamma}}}{\left[1-\left(\frac{1}{2}\right)^{\frac{1}{\gamma}}\right]}$$

The minimum required brake reservoir capacity is then:

$$(V_r)_{min} = (V_c+V_s)(11,049)$$

The volume of a type 24 service brake chamber at maximum stroke is 1,07 litres.[55] Total service chamber volume for six chambers adjusted to half maximum stroke is therefore:

$V_c = 3,21$ litres

The service line volume (including volume of relay valves) is estimated to be:

$V_s = 1,10$ litres

Hence:

$(V_r)_{min} = 47,6$ litres

The total of 60 litre brake reservoir capacity (ie. two 30 litre reservoirs) fitted to the semi-trailer is thus sufficient.

APPENDIX G

SELECTION OF OVERALL VEHICLE PARAMETERS

G.1 General

As a result of the dependence of the legal gross vehicle mass, payload and overall dimensions of the semi-trailer on the tare mass and dimensions of the towing vehicle, some discussion of possible truck-tractor and semi-trailer combinations is necessary in order to define overall design parameters.

The following analysis of eighteen representative truck-tractors on the South African market outlines calculations and presents results of maximum overall semi-trailer dimensions and truck-tractor 5th wheel position, as well as maximum gross combination mass and payload for each of the truck-tractor/semi-trailer combinations considered. Three distributions of load between the truck-tractor and trailer are considered. These are:

- **Case A** - Full use of the payload capacity of the truck-tractor as well as an optimum load distribution between the front axle and the rear axle bogie of the truck-tractor. Since the Gross Combination Mass (GCM) is lower than the sum of the individual legal axle mass loads due to bridge formula restrictions, this results in the axle loads on the semi-trailer tri-axle bogie being lower than the legal maximum allowed for that group of axles.
- **Case B** - Maximum legal axle mass loads on the semi-trailer tri-axle bogie and the front axle of the truck-tractor. Here the load on the rear axle bogie of the truck-tractor will be below the legal maximum load. This particular load distribution results in slightly longer trailer lengths since the required 5th wheel position is further forward than the previous case.

- **Case C** - Maximum legal axle mass load on the front axle of the truck-tractor and the centre of gravity of the payload at the centre of the trailer deck. This is an intermediate case which results in axle mass loads at both the truck-tractor rear bogie and the semi-trailer tri-axle bogie of less than the respective legal maximum loads.

Case B represents the foremost 5th wheel position without compromising on GCM in that 5th wheel positions further forward will necessitate a reduction in allowable payload to prevent overloading of the front axle of the truck-tractor. In all three cases above, the front axle of the truck-tractor is loaded to the legal maximum axle load in order to achieve the furthermost forward 5th wheel position on the truck-tractor and, thus, the longest possible semi-trailer length.

Only forward control or 'cab over engine' type 6×4 truck-tractors have been considered in this analysis since they afford considerable advantages in terms of allowable semi-trailer lengths when compared to normal control models. The overall dimensions and tare masses of the eighteen truck-tractors, as detailed in the individual manufacturer's data sheets, are presented in Table G.1. It should be noted, however, that the actual tare masses will vary slightly in practice depending on the optional equipment fitted to the vehicle. The tare mass of the 5th wheel and sub-frame is assumed to be 200 kg.

Figure G1 defines the relevant dimensions used in this analysis (refer Section 4.2.1). The tare mass of the semi-trailer is assumed to be 5 970 kg (refer Section 4.2.2).

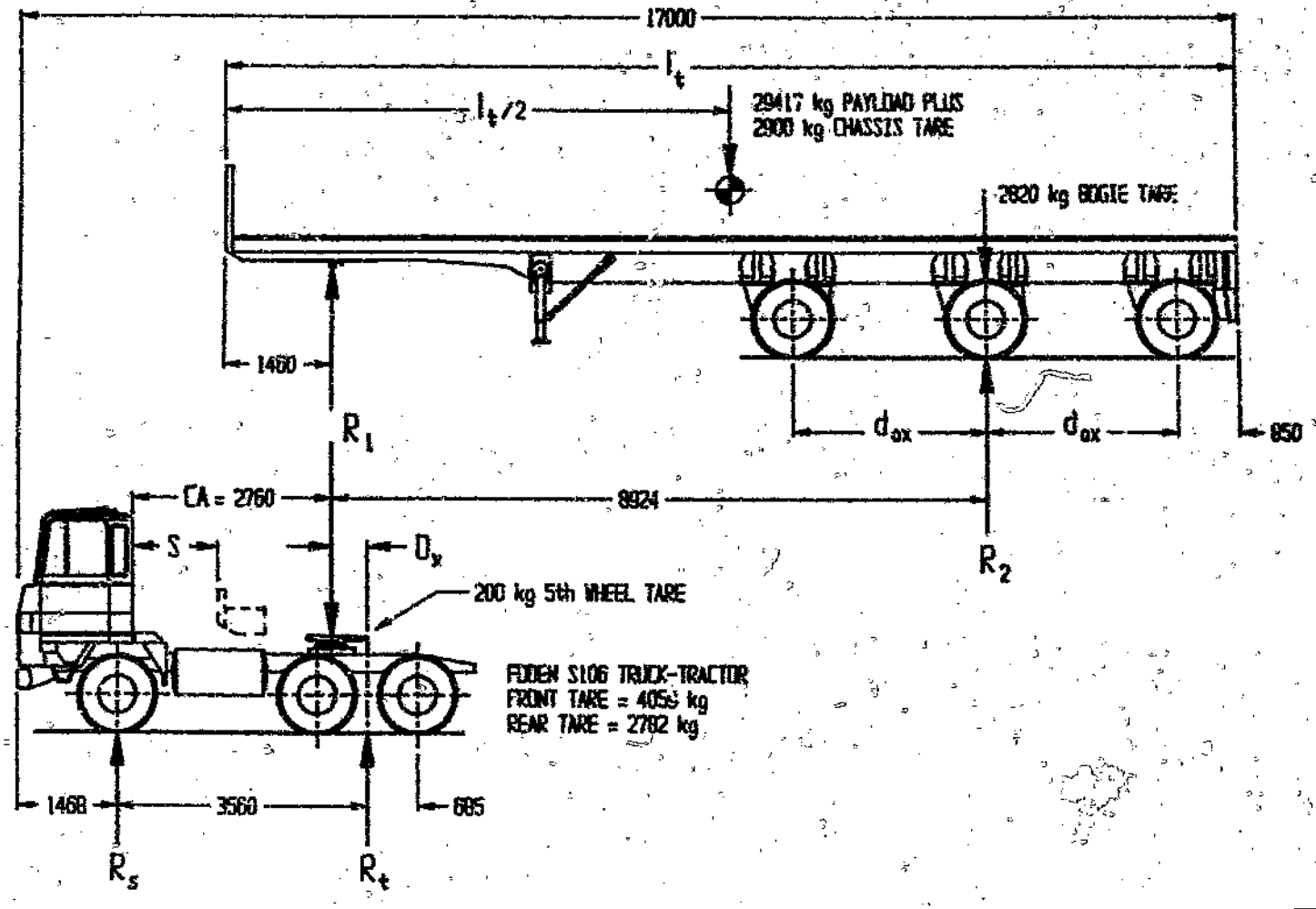

Figure G1 Relevant dimensions for truck-tractor/semi-trailer load distribution analysis

G.2 Sample calculation

For the purpose of this sample calculation a Foden S106 6 × 4 truck-tractor is selected.

For all of the truck-tractor/semi-trailer combinations considered in this analysis, the limiting bridge formula span (refer Section 4.2.1) is either from the front axle of the truck to the rearmost axle of the semi-trailer, or from the foremost drive axle of the truck to the rearmost axle of the semi-trailer. In this sample calculation the former span is limiting and the legal GCM is:

$$\begin{aligned} \text{GCM} &= 1{,}8 \times 14\,682 + 16\,000 \\ &= 42\,428 \text{ kg} \end{aligned}$$

Hence, subtracting the tare mass of the truck-tractor (Table G1), the 5th wheel and the semi-trailer:

$$\begin{aligned} \text{Payload} &= 42\,428 - 6\,841 - 200 - 5\,970 \\ &= 29\,417 \text{ kg} \end{aligned}$$

G.2.1 Case A - Full use of payload capacity of truck-tractor

The maximum front axle load for the Foden S106 truck-tractor is 6 100 kg (refer Table G1) and the maximum legal load on the truck rear tandem axle bogie is 16 400 kg (refer Section 4.2.1). Subtracting these axle loads from the GCM in Table G2, the semi-trailer tri-axle bogie load is thus:

$$\begin{aligned} R_2 &= 42\,428 - 6\,100 - 16\,400 \\ &= 19\,928 \text{ kg} \end{aligned}$$

Referring to Figure G1, the semi-trailer king-pin load is then:

$$R_1 = 29\,417 + 5\,970 - 19\,928$$

$$= 15\,459 \text{ kg}$$

Adding the mass of the 5th wheel and taking moments about the centre line of the truck-tractor rear axle bogie:

$$D_x = \frac{(2\,041)(3\,560)}{(15\,459 + 200)}$$

$$= 464 \text{ mm}$$

The semi-trailer length, from Figure G1, is thus:

$$l_t = 17\,000 - 1\,468 - 3\,560 + 464 + 1\,460$$

$$= 13\,896 \text{ mm}$$

and the axle spacing on the semi-trailer tri-axle bogie is

$$d_{ax} = 13\,896 - 1\,460 - 8\,924 - 850$$

$$= 2\,662 \text{ mm}$$

With the 5th wheel positioned 464 mm forward of the centre line of the truck rear axle bogie, the swing clearance between the trailer and the truck cab will be:

$$S = 2\,760 - 464 - \sqrt{\left(\frac{2\,490}{2}\right)^2 + (1\,460)^2}$$

$$= 403 \text{ mm}$$

G.2.2 Case B - Maximum load on trailer tri-axle bogie and front axle of truck-tractor

The legal maximum load on axles fitted with super single tyres is 7 700 kg per axle (refer Section 4.2.1). Provided the axle spacing on the trailer tri-axle bogie exceeds 1 072 mm and, thus, the bridge formula does not further limit the allowable load on the trailer bogie, the legal load on the truck tandem axle bogie is:

$$R_t = 42\,428 - 3 \times 7\,700 - 6\,100$$

$$= 13\,228 \text{ kg}$$

Referring to Figure G1, the semi-trailer king pin load is:

$$R_1 = 29\,417 + 5\,970 - 23\,100$$

$$= 12\,287 \text{ kg}$$

Taking moments about the centre of the truck rear axle bogie:

$$D_x = \frac{(2\,041)(3\,560)}{(12\,287 + 200)}$$

$$= 582 \text{ mm}$$

The trailer length from Figure G1 is:

$$l_t = 17\,000 - 1\,468 - 3\,560 + 582 + 1\,460$$

$$= 14\,014 \text{ mm}$$

and the axle spacing is

$$d_{sz} = 14\,014 - 1\,460 - 8\,924 - 850$$

$$= 2\,780 \text{ mm}$$

The swing clearance between the front of the trailer and the truck cab is:

$$S = 2\,760 - 582 - \sqrt{\left(\frac{2\,409}{2}\right)^2 + (1\,460)^2}$$

$$= 285 \text{ mm}$$

G.2.3 Case C - Maximum load on front axle of truck-tractor and centre of gravity of payload at centre of trailer deck

For a maximum front axle load of 6 100 kg on the Foden truck-tractor, the portion of the load imposed at the 5th wheel mounting that can be transferred to the truck front axle is 2 041 kg. Taking moments about the centre line of the truck-tractor rear axle bogie in Figure G1:

$$R_1 = \frac{(2\,041)(3\,560)}{D_x} - 200$$

The length of the semi-trailer is:

$$\ell_t = 17\,000 - 1\,468 - 3\,560 + D_x + 1\,460$$

$$= 13\,432 + D_x$$

Taking moments about the centre line of the semi-trailer tri-axle bogie:

$$R_1(8\,924) = (29\,417 + 2\,900 + 250)[8\,924 - (l_t/2 - 1\,460)]$$

that is

$$R_1 = (32\,567)\left(1 - \frac{l_t/2 - 1\,460}{8\,924}\right)$$

Solving these three equations simultaneously:

$D_x = 580$ mm

$l_t = 14\,012$ mm

$R_1 = 12\,328$ kg

Thus, the semi-trailer tri-axle bogie load is:

$$R_2 = 29\,417 + 5\,970 - 12\,328$$

$$= 23\,059 \text{ kg}$$

and the truck rear bogie load is

$$R_t = 42\,428 - 6\,100 - 23\,059$$

$$= 13\,269 \text{ kg}$$

Again referring to Figure G1, the semi-trailer axle spacing is given by:

$$d_{ax} = 14\,012 - 1\,460 - 8\,924 - 850$$

$$= 1\,778 \text{ mm}$$

Finally, the swing clearance between the front corner of the trailer and the truck cab in this case is:

$$S = 2\,760 - 580 - \sqrt{\left(\frac{2\,409}{2}\right)^2 + (1\,460)^2}$$

$$= 287 \text{ mm}$$

G.3 Results

Table G2 presents results of maximum GCM and payload, whilst Tables G3 to G5 present results as detailed in the above sample calculations for the eighteen truck-tractors considered.

The maximum payload achieved in this analysis is 29 417 kg (refer Table G2) for the case of the Foden S106 truck-tractor and semi-trailer combination. A design payload of 30 000 kg was thus selected for design purposes in this project.

Although the maximum deck length attained in this analysis is 14 196 mm (refer Table G4), it was considered prudent to size the length of the semi-trailer so that it could be coupled to the majority of the truck-tractors analysed without compromising on payload (also refer Section 4.2.1). With this in mind, an overall trailer length of 13 850 mm was selected. This length is suitable for approximately 75 percent of the truck-tractors for the Case B load distribution in Table G4 and results in a 2 620 mm spacing between axles on the semi-trailer.

Table G1 Truck-tractor data

Truck - tractor	Tare - steer axle (kg)	Tare tandem bogie (kg)	Max front axle load (kg)	Front overhang (mm)	Wheelbase (mm)	Half tandem bogie spread (mm)	CA dimension (mm)
Scania R112 H-31	4205	3760	6500	1360	3775	675	3505
International TF 2670 SWB	3950	3430	6000	1412	3845	675	3132
International TF 2670 LWB	4025	3560	6000	1412	4370	675	3282
Mercedes 2633/S-32	4975	4090	6500	1410	3875	675	3235
Samag 280M - 26FS	4050	4050	6500	1240	4190	690	3790
Samag 320M - 26FS	4200	4100	6500	1240	4190	690	3790
MAN 30.280 DFT	3980	4200	6500	1500	3875	675	3385
MAN 30.280 DFT/S	4070	4210	6500	1500	3875	675	3005
Nissan CW41 - HD	3580	4000	6000	1240	4000	650	3000
Isuzu VPZ 441S	3690	3285	6000	1425	3790	675	3350
Toyoto Hino 42-260F	3655	3505	6000	1465	4000	650	2916
Oshkosh E1446 T350	5120	3910	6000	1246	3734	685	2720
Oshkosh E1344 T290	4825	3675	6000	1246	3734	685	2720
Ford Louisville LNT 350	3700	3780	6000	693	4420	635	2758
ERF Single cab 66A 280B	4200	3400	6500	1283	3683	630	3033
ERF Euro cab 66A 280B	4400	3400	6500	1283	3683	635	2860
ERF Single cab 66Cu 350B	4650	4250	6500	1283	3683	635	3033
Foden S106 – 6 × 4	4059	2782	6100	1468	3560	685	2760

Table G2 Maximum GCM and payload

Truck-tractor	GCM (kg)	Payload (kg)
Scania R112 H-31	42 622	28 487
International TF 2670 SWB	42 528	28 978
International TF 2670 LWB	41 377	28 122
Mercedes 2633/S-32	42 532	27 397
Samag 280 M-26FS	42 838	28 568
Samag 320 M-26FS	42 838	28 368
MAN 30.280 DFT	42 370	28 020
MAN 30.280 DFT/S	42 370	27 920
Nissan CW41-HD	42 808	29 058
Isuzu VPZ 441S	42 505	29 360
Toyota Hino 42-260F	42 403	28 773
Oshkosh E1446 T350	42 827	27 627
Oshkosh E1344 T290	42 827	28 157
Ford Louisville LNT 350	43 010	29 360
ERF Single cab 66A 280B	42 761	28 991
ERF Euro cab 66A 280B	42 761	28 791
ERF Single cab 66Ca 350B	42 761	27 691
Foden S106 – 6 × 4	42 428	29 417

Table G3 Results for Case A weight distributions

Truck - tractor	Tandem bogie load (kg)	Tridem bogie load (kg)	King-pin load (kg)	5th wheel position (mm)	Trailer length (mm)	Trailer axle spacing (mm)	Swing clearance (mm)
Scania R112 H-31	16400	19722	14735	580	13905	2671	1032
International TF 2670 SWB	16400	20128	14820	525	13728	2494	714
International TF 2670 LWB	16400	19477	14615	583	13261	2027	806
Mercedes 2633/S-32	16400	19632	13635	427	13602	2,368	915
Samag 280M - 26FS	16400	19938	14600	694	13724	2490	1203
Samag 320M - 26FS	16400	19938	14400	660	13690	2456	1237
MAN 30.280 DFT	16400	19470	14520	663	13748	2514	829
MAN 30.280 DFT/S	16400	19470	14420	644	13729	2495	468
Nissan CW41 - HD	16400	20408	14620	653	13873	2639	454
Isuzu VPZ 441S	16400	20105	15225	568	13817	2579	869
Toyota Hino 42-260F	16400	20003	14740	628	13623	2389	395
Oshkosh E1445 T350	16400	20427	13170	246	13726	2492	581
Oshkosh E1344 T290	16400	20427	13700	316	13796	2562	511
Ford Louisville LNT 350	16400	20610	14720	681	14028	2794	184
ERF Single cab 66A 280F	16400	19861	15100	554	14048	2814	586
ERF Euro cab 66A 280B	16400	19861	14900	512	14006	2772	457
ERF Single cab 66Co 350B	16400	19861	13800	487	13981	2747	653
Foden S106 – 6 × 4	16400	19928	15459	464	13696	2662	403

Table G4 Results for Case B weight distribution

Truck - tractor	Tandem bogie load (kg)	Tridem bogie load (kg)	King-pin load (kg)	5th wheel position (mm)	Trailer length (mm)	Trailer axle spacing (mm)	Swing clearance (mm)
Scania R112 H-31	13022	23100	11357	750	14075	2841	862
International TF 2670 SWB	13428	23100	11848	654	13857	2623	585
International TF 2670 LWB	12777	23100	10992	771	13449	2215	606
Mercedes 2633/S-32	12932	23100	10167	570	13745	2,511	772
Samag 280M - 26FS	13238	23100	11436	882	13912	2678	1015
Samag 320M - 26FS	13238	23100	11238	843	13873	2639	1054
MAN 30.280 DFT	12770	23100	10890	881	13966	2732	611
MAN 30.250 DFT/S	12770	23100	10790	857	13942	2708	255
Nissan CW41 - HD	13708	23100	11928	796	14018	2784	309
Isuzu VPZ 441S	13405	23100	12230	704	13949	2715	733
Toyota Hino 42-260F	13303	23100	11643	702	13787	2553	231
Oshkosh E1446 T350	13727	23100	10497	307	13787	2553	520
Oshkosh E1444 T290	13727	23100	11027	391	13871	2637	436
Ford Louisville LNT 350	14059*	23100*	12230	765	14112	2878	100
ERF Single cab 66A 280B	13161	23100	11861	702	14196	2962	438
ERF Euro cab 66A 280B	13161	23100	11661	652	14146	2912	317
ERF Single cab 66Cu 350B	13161	23100	10561	633	14127	2893	507
Foden S106 -- 6 × 4	13228	23100	12287	582	14014	2780	285

*Maximum front axle load reduced to 5851 kg to ensure clearance greater than 100 mm.

Table G5 Results for Case C weight distribution

Truck - tractor	Tandem bogie load (kg)	Tridem bogie load (kg)	King-pin load (kg)	5th wheel position (mm)	Trailer length (mm)	Trailer axle spacing (mm)	Swing clearance (mm)
Scania R112 H-31	13592	22530	11927	714	14039	2805	898
International TF 2670 SWB	14080	22418	12500	621	13824	2590	618
International TF 2670 LWB	14817	21060	13052	652	13330	2096	737
Mercedes 2633/S-32	14901	21131	12136	479	13654	2,429	803
Samag 280M - 26FS	14091	22247	12291	582	13852	2618	822
Samag 320M - 26FS	14304	22034	12304	771	13801	2567	1126
MAN 30.280 DFT	13902	21968	12022	799	13884	2650	693
MAN 30.280 DFT/S	14015	21855	12035	770	13855	2621	342
Nissan CW41 - HD	13394	22814	12214	780	14000	2766	327
Isuzu VPZ 4413	13617	22688	12442	693	13938	2704	744
Toyota Hino 42-260F	14251	22152	12591	733	13728	2494	290
Oshkosh E1446 T350	15337	21490	12107	267	13747	2513	560
Oshkosh E1344 T290	14861	21905	12161	355	13835	2601	472
Ford Louisville LNT 350	14223*	23100*	12230	707	14054	2820	158
ERF Single cab 66A 280B	13210**	23100**	11861	687	14131	2947	453
ERF Euro cab 66A 280B	13371	22890	11871	641	14135	2901	328
ERF Single cab 66Cu 350B	14169	22092	11569	579	14073	2839	561
Foden 5106 – 6 × 4	13269	23059	12328	580	14012	2778	287

*5 687 kg on steering axle to prevent overload on tridem bogie.

**6 451 kg on steering axle to prevent overload on tridem bogie.

APPENDIX H

ENGINEERING DRAWINGS

This appendix contains all of the engineering drawings used in the construction of the aluminium semi-trailer. These are divided into fourteen drawing series denoted by the following prefixes:

CA - General assembly drawing

M5260 - 'Alusuisse' main I-beam drawing

CH - Chassis assembly and general component drawings

DE - Deck assembly and component drawings

UC - Upper coupling assembly and component drawings

OR - Outrigger and torsion tube drawings

SS - Suspension assembly and component drawings

LL - Landing leg assembly and component drawings

LG - Light and retro-reflector mounting drawings

RB - Rear bumper assembly and component drawings

HB - Headboard assembly and component drawings

PM - Pneumatic circuit drawings

EL - Electrical circuit drawing

JG - Jig drawings

Unless otherwise indicated on the drawings, the permissible deviations for machined dimensions and non-toleranced fabrication dimensions are given in Table H1 and Table H2 below.

Table H1 Permissible deviation for non-toleranced machined dimensions

Nominal machined dimension (mm)		Permissible deviation (mm)
Over	to	
0	15	0,2
15	70	0,3
70	200	0,4
200	500	0,5
500	1000	0,7

Table H2 Permissible deviation for non-toleranced fabrication dimensions

Nominal fabrication dimension (mm)		Permissible deviation (mm)
Over	to	
0	175	0,5
175	500	1,0
500	1300	1,5
1300	2800	2,0
2800	6000	3,0
6000	14000	4,0

All dimensions on the drawings are in millimetres.

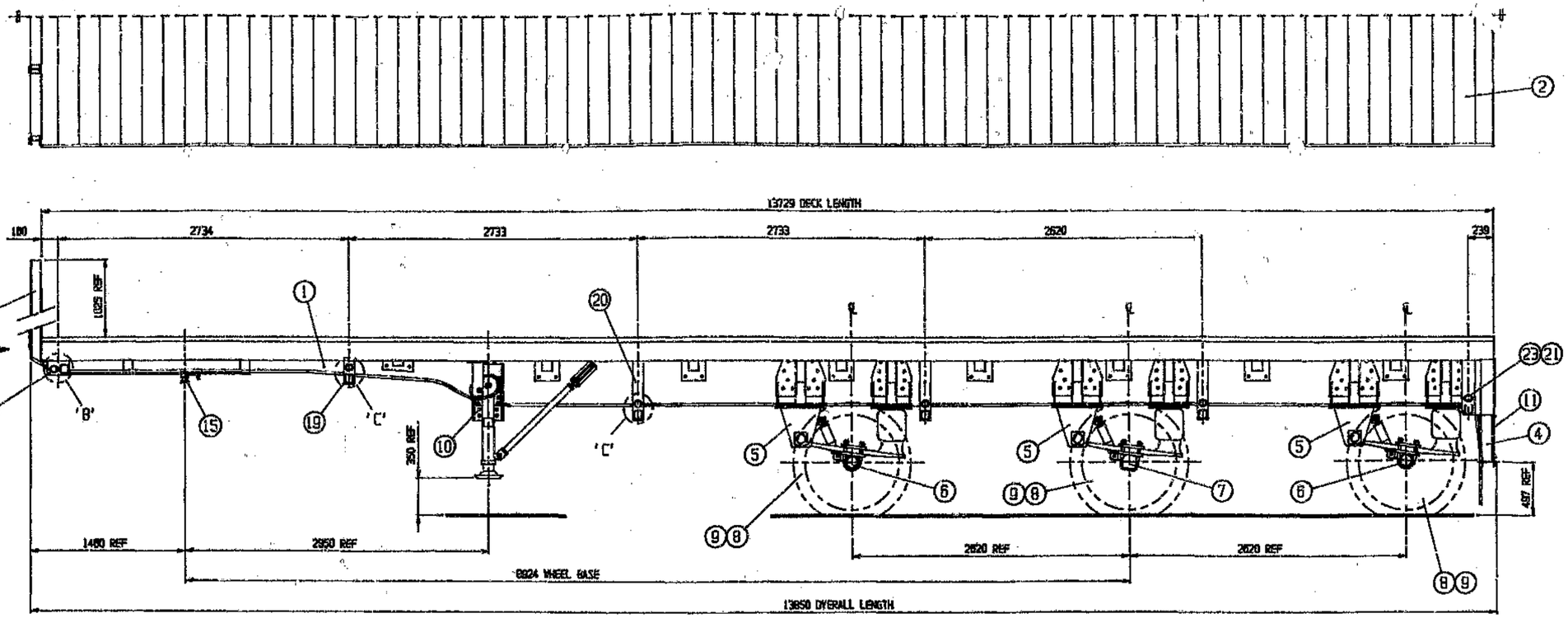

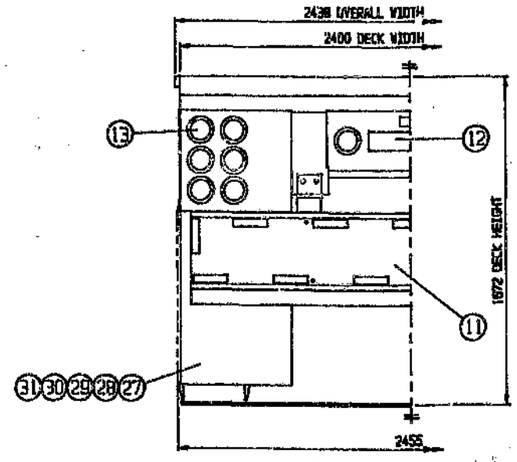

REAR END

ITEM	DESCRIPTION	DRG./PART NUMBER	QTY
24	M10 x 35 HEX BOLT, CADMIUM PLATED (GD 8.8)	-	20
23	ø4mm ALUMINIUM POP RIVET	-	24
22	CLEAR RETRO-REFLECTOR	HELLA RA 0490C	4
21	AMBER RETRO-REFLECTOR	HELLA RA 0391A	12
20	SIDE MARKER LIGHT BRACKET	LG-05-01	6
19	SIDE MARKER LIGHT BRACKET	LG-05-02	2
18	ASSEMBLY SIDE MARKER LIGHT BRACKET	LG-04	2
17	MCD. PNEUMATIC SYSTEM FOR STEERING AXLES	PN-03	1
16	AIR SUSPENSION PNEUMATIC SYSTEM	PN-02	1
15	HOPE ANTI-JACK-KNIFE DEVICE	-	1
14	BRAKE AND HOPE DEVICE PNEUMATIC SYSTEM	PN-01	1
13	ELECTRICAL SYSTEM	EL-01	1
12	NUMBER PLATE	-	1
11	CHEVRON BOARD ASSEMBLY	LG-07	1
10	LANDING LEG ASSEMBLY	LL-01	1
9	15 DEG DEEP CENTRE STEEL RIM	22.5 x 13.0, 10 STUD	6
8	TUBELESS RADIAL SUPER SINGLE TYRE	MICHELIN 16.5R22.5 XX	6
7	PRIMAR 1100 FIXED AXLE ASSEMBLY	HENRED AA-0001-13	1
6	FIA SELF-STEERING AXLE ASSEMBLY	HENRED AA-0005-03 (FIA S2180)	2
5	SUSPENSION ASSEMBLY	SS-01	3
4	REAR BUMPER ASSEMBLY	BB-01	1
3	HEADBOARD ASSEMBLY	HB-01	1
2	DECK ASSEMBLY	DE-01	1
1	CHASSIS ASSEMBLY	CH-01	1

ITEM	DESCRIPTION	DRG./PART NUMBER	QTY
31	M10 FLAT PREC WASHER, CADMIUM PLATED	-	16
30	M10 NYLOC NUT, CADMIUM PLATED	-	16
29	M10 x 25 HS HEX BOLT, CADMIUM PLATED	-	16
28	MOUNTING BRACKET FOR MUD FLAP	LG-10	2
27	MUD FLAP	HENRED FRUEHAUF ANTI-SAIL	2
26	M10 HS FLAT PREC WASHER, CADMIUM PLATED	-	28
25	M10 NYLOC NUT (GD 8) ZINC PLATED	-	28

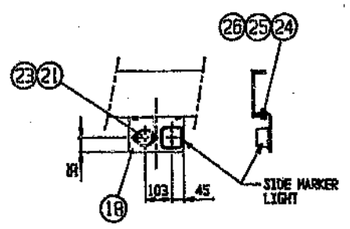

DETAIL 'B'
(SCALE 1:10)

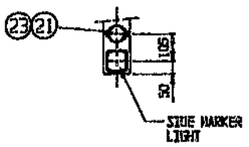

DETAIL 'C'
(SCALE 1:10)

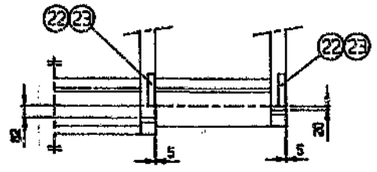

VIEW ON ARROW 'A'
(SCALE 1:12.5)

NOTE.

1. MOUNTING HOLES FOR HEADBOARD, LANDING LEG CRANK BRACKETS, SIDE MARKER LIGHT BRACKETS AND REAR BUMPER TO BE DRILLED ON ASSEMBLY.
2. MOUNTING HOLES IN BUMPER UPRIGHTS FOR CHEVRON BOARD ASSEMBLY TO BE DRILLED AND TAPPED ON ASSEMBLY (ø8.3mm DRILL - TAP M10).
3. REFER TABLE E3 IN APPENDIX E FOR BOLT TORQUES NOT SPECIFIED ON THIS DRAWING.
4. WHEEL STUDS TO BE TIGHTENED TO A TORQUE OF 530 Nm
5. REFER HOPE DEVICE INSTALLATION MANUAL FOR INSTALLATION PROCEDURES AND BOLT TORQUES FOR THE HOPE KING-PIN.

UWtec	UNIVERSITY OF THE WITWATERSRAND	
	LIGHTWEIGHT ALUMINIUM SEMI-TRAILER PROJECT	
MATERIAL:	TITLE:	DRG. No:
SCALE: 1:20	GENERAL ASSEMBLY	GA-01
DATE: 20-01-84		
DRAWN: M.ELSTON		

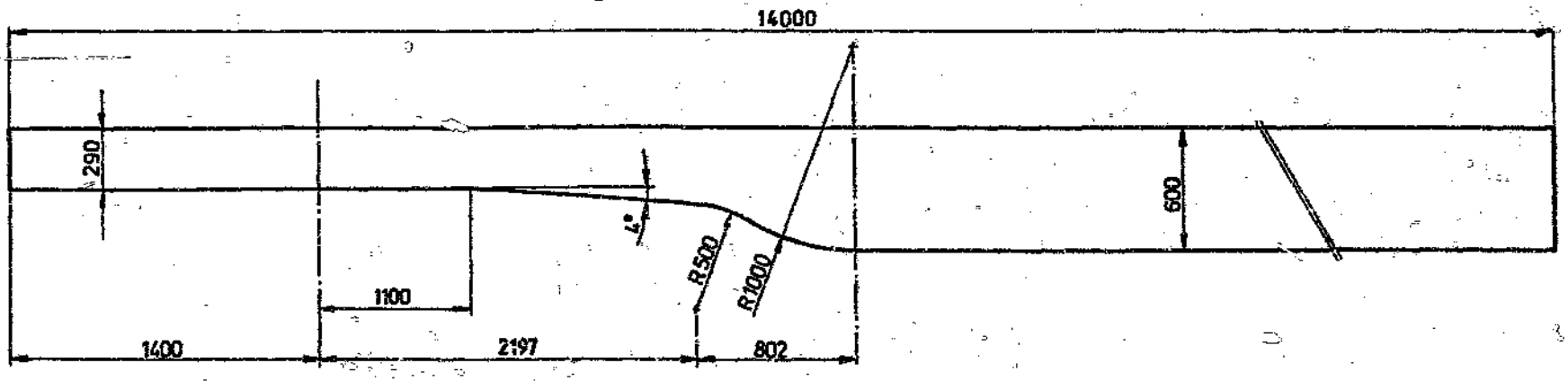

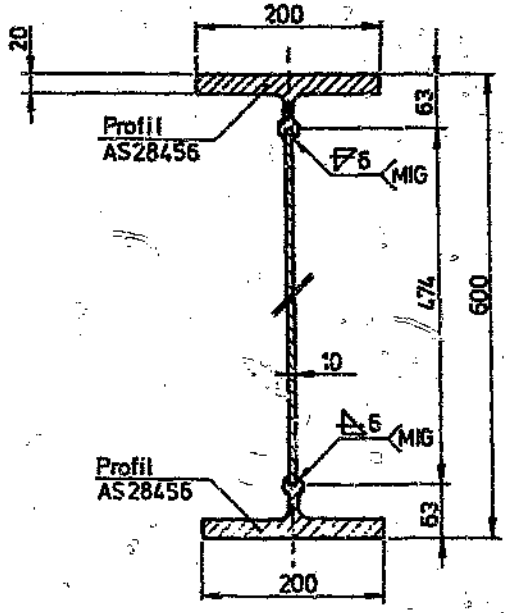

MATERIAL: Werkstoff : 6112/61
WELDING WIRE: Schweissdraht : S-AlSi 5 ø1,6 (ø1,2)
GOOSENECK TO: Schwanenhals nach ISO 1[illegible]-1973 (E)
COLD FORMED kaltgebogen
TOLERANCES: Toleranzen : M 5260-6.3.00

Diese Zeichnung ist ein geschützlicher Projektbestandteil. Änderungen, besonders Ausführung, Maßangaben und Materialangaben sind nur der Herstellerfirma zu übertragen.

Ce dessin projeté un projet sous engagement. Les calculs, mesures, dimensions exécutives, ainsi que les autres ont matières réservées au fabricant.

Das Urheberrecht an diesem Zeichnungen und allen Rechten, die dem Empfänger persönlich anvertraut sind, verbleibt bei uns. Ohne unsere schriftliche Genehmigung dürfen sie weder kopiert oder vervielfältigt, noch anderen dritten Personen mitgeteilt oder sonstwie benutzt werden.

Ce dessin et ses annexes sont restés notre propriété et sont protégés. Ils restent, où leur temps, notre propriété intellectuelle et ne peuvent pas être copiés, reproduits, communiqués à des tiers, ni livrés à leur portée, sans autorisation écrite de notre part.

LÄNGSTRÄGER

3-achs Pritschsattelanhänger
SA 142 F 3 PTC 32

Kunde: University of the Wit[illegible]tersrand

Maßstab	Datum	15.11.82
1:20	Gezeichnet	
1:5	Geprüft	
	Norm	

Schweizer[illegible] Aluminium AG

M5260-415.3

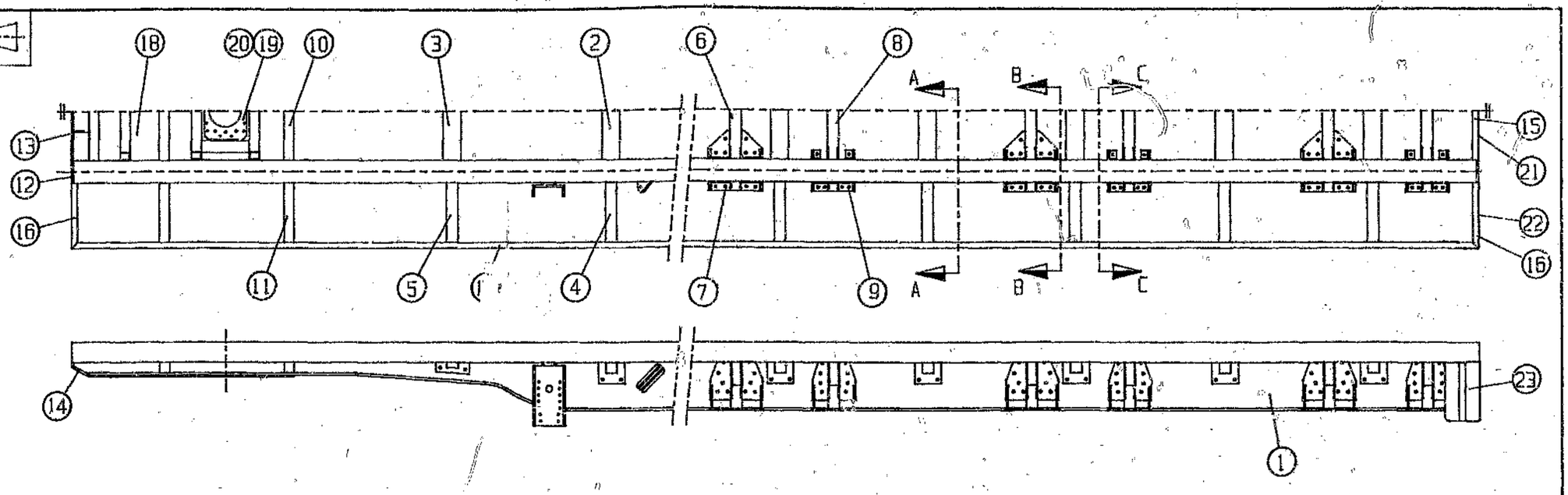

ITEM	DESCRIPTION	MATERIAL	DRG. NUMBER	QTY
23	SIDE PORTION OF OUTER LIGHT BOARD	0543 - H2 AL. ALLOY	LG-03	1 LH 1 RH
22	REAR PORTION OF OUTER LIGHT BOARD	0543 - H2 AL. ALLOY	LG-02	1 LH 1 RH
21	CENTRE LIGHT BOARD	0543 - H2 AL. ALLOY	LG-01	1
20	CSK SCREW	M18 x 80 CSK CAP SCREW (GD 8.8), CADMIUM PLATED	-	18
19	HOPE DEVICE FOUNDATION PLATE	ROC-TUF AD690 STEEL	UC-13	1
18	RUBBING PLATE ASSEMBLY		UC-02	1
17	SIDE RAIL	0655 - TF AL. ALLOY	CH-05	2
16	OUTER SECTION OF END RAIL	0655 - TF AL. ALLOY	CH-07	4
15	CENTRE SECTION OF REAR END RAIL	0655 - TF AL. ALLOY	CH-06	1
14	RUBBING PLATE LEAD-IN PLATE	8515 - TF AL. ALLOY	UC-04	1
13	FRONT PLATE GUSSET	8515 - TF AL. ALLOY	UC-06	2
12	FRONT PLATE	8515 - TF AL. ALLOY	UC-05	1
11	UPPER COUPLER OUTRIGGER	0655 - TF AL. ALLOY	UC-12	2 LH 2 RH
10	UPPER COUPLER CROSS-MEMBER ASSEMBLY		UC-09	3
9	SUSPENSION AIR-BAG OUTER BRACKET ASSEMBLY		SS-05	6
8	SUSPENSION AIR-BAG CROSS-MEMBER ASSEMBLY		SS-03	3
7	SUSPENSION HANGER OUTER BRACKET ASSEMBLY		SS-04	6
6	SUSPENSION HANGER CROSS-MEMBER ASSEMBLY		SS-02	3
5	OUTRIGGER ASSEMBLY		OR-02	1 LH 1 RH
4	OUTRIGGER ASSEMBLY		OR-01	14
3	TORSION TUBE ASSEMBLY		TR-04	1
2	TORSION TUBE ASSEMBLY		TR-03	7
1	MAIN CHASSIS I-BEAM ASSEMBLY		CH-04	1 LH 1 RH

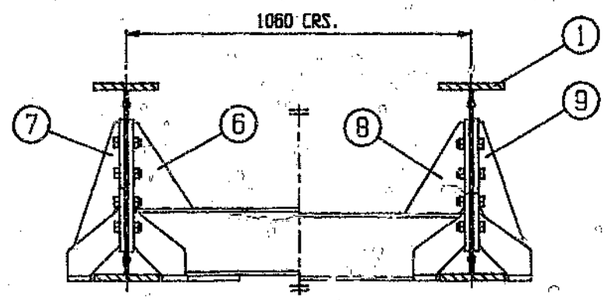

SECTION B-B
(SCALE 1:10)

SECTION C-C
(SCALE 1:10)

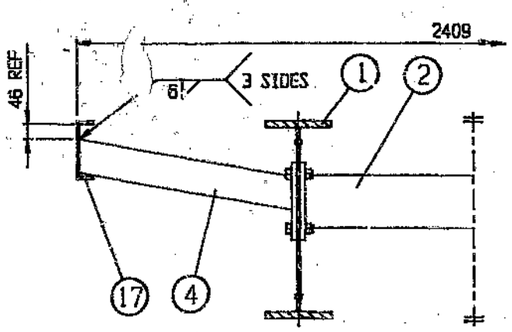

SECTION A-A
(TYPICAL FOR ALL SQUARE TUBE TYPE OUTRIGGERS)
(SCALE 1:10)

NOTE.

1. REFER DRAWINGS CH-02, CH-03 AND UC-01 FOR ASSEMBLY AND WELDING DETAILS AT FRONT, REAR AND UPPER COUPLER REGIONS OF THE CHASSIS RESPECTIVELY.
2. CHASSIS TO BE TURNED OVER TO COMPLETE WELDING FROM UNDERNEATH.
3. MOUNTING BOLT HOLES IN LOWER FLANGE OF CHASSIS I-BEAMS AND IN UPPER COUPLER CROSS-MEMEBER FOR RUBBING PLATE TO BE DRILLED ON ASSEMBLY.
4. UNDERSIDE OF HOPE DEVICE FOUNDATION PLATE TO BE PAINTED WITH ZINC CHROMATE PRIMER BEFORE ASSEMBLY. WHEN DRY, A SECOND COAT OF VISCOUS ZINC CHROMATE PRIMER TO BE APPLIED AND THE FOUNDATION PLATE BOLTED TO THE RUBBING PLATE ASSEMBLY WHILE THE PRIMER IS STILL WET.
5. ALL WELDS MIG WELDS. FILLER ALLOY AA 5356 1.2mm WIRE.
6. REFER TABLE E3 IN APPENDIX E FOR BOLT TORQUES NOT SPEC. ON THIS DRAWING.

UWtec		UNIVERSITY OF THE WITWATERSRAND	
		LIGHTWEIGHT ALUMINIUM SEMI-TRAILER PROJECT	
MATERIAL:		TITLE:	DRG. no.
SCALE:	1:25	MAIN CHASSIS ASSEMBLY	CH-01
DATE:	20-01-86		
DRAWN:	M.ELSTON		

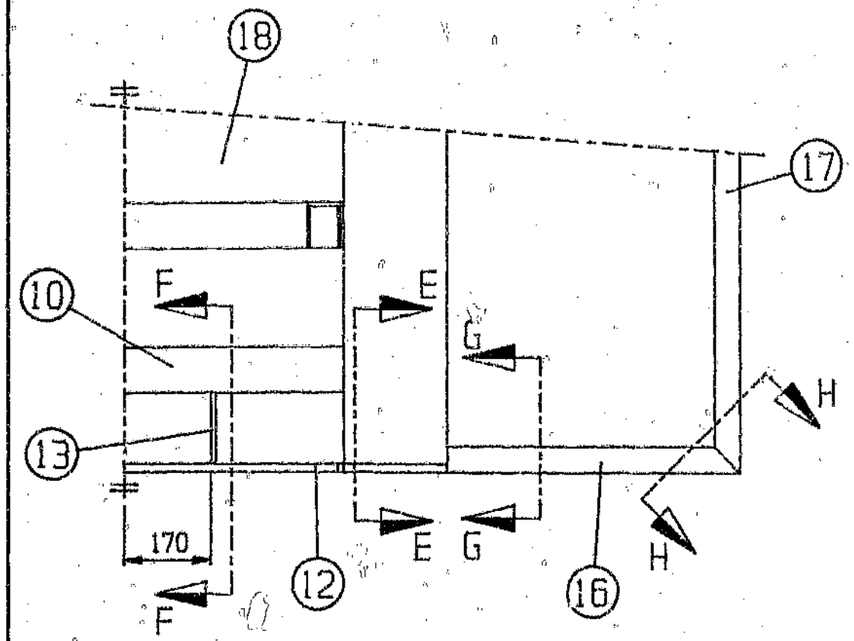

FRONT END

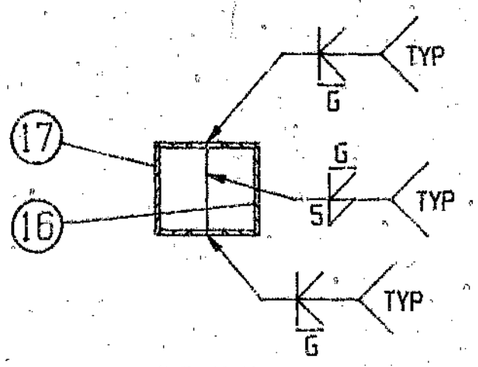

SECTION H-H
(TYPICAL FOR 4 CORNERS)

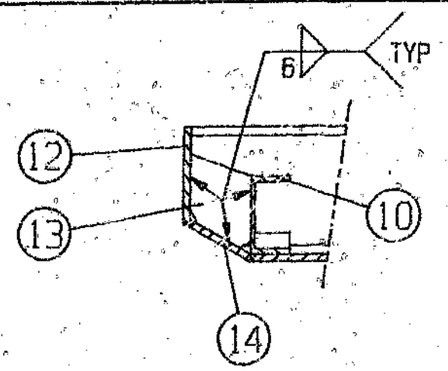

SECTION F-F

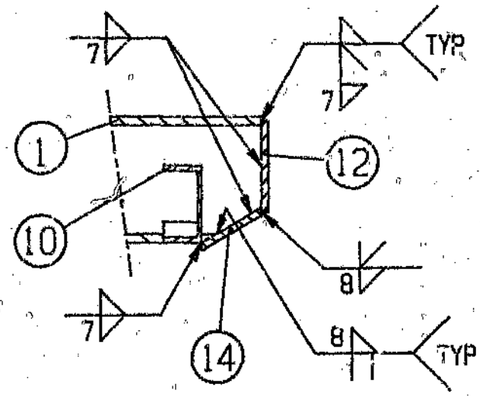

SECTION E-E
(RUBBING PLATE NOT SHOWN)

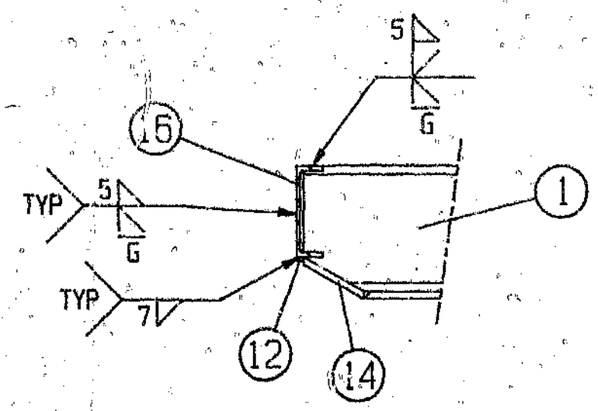

SECTION G-G

NOTE.

1. REFER DRG. CH-01 FOR FOR MATERIAL LIST.
2. ALL WELDS MIG WELDS. FILLER ALLOY AA 5356 1.2mm WIRE.

ITEM	DESCRIPTION	MATERIAL	DRG. NUMBER	QTY

UWtec	UNIVERSITY OF THE WITWATERSRAND
	LIGHTWEIGHT ALUMINIUM SEMI-TRAILER PROJECT
MATERIAL:	
SCALE:	1:10
DATE:	22-01-04
DRAWN:	M.ELSTON
TITLE:	CHASSIS ASSEMBLY - FRONT
DRG. No:	CH-02

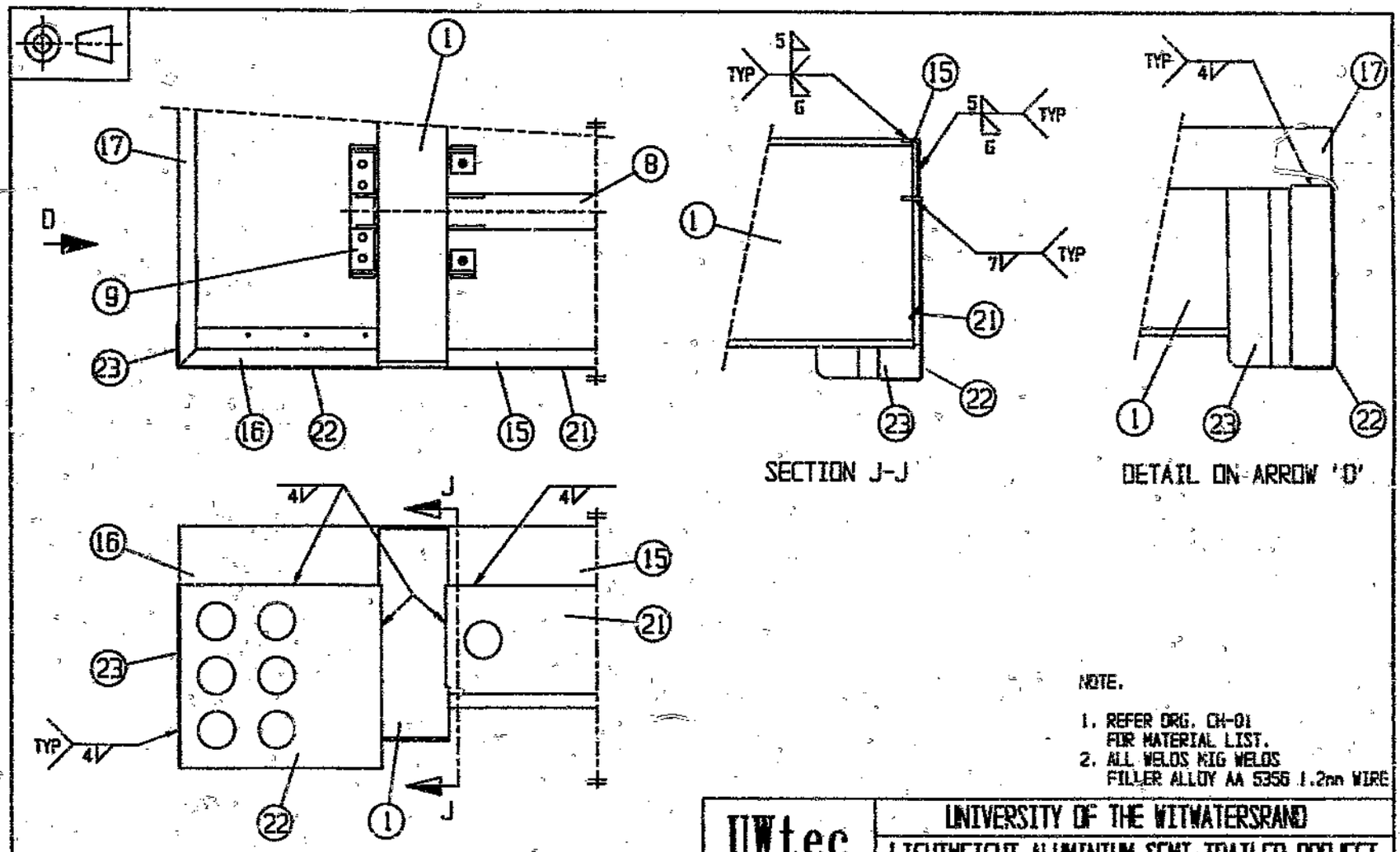
1
17
8
D
9
23
16
22
15
21
REAR END
J
J
4V
4V
TYP
4V
16
15
21
23
22
1
5
TYP
G
15
5
TYP
G
7V
TYP
21
22
23
SECTION J-J
TYP
4V
17
1
23
22
DETAIL ON ARROW 'D'
NOTE.
1. REFER DRG. CH-01 FOR MATERIAL LIST.
2. ALL WELDS MIG WELDS FILLER ALLOY AA 5356 1.2mm WIRE
UWtec
UNIVERSITY OF THE WITWATERSRAND
LIGHTWEIGHT ALUMINIUM SEMI-TRAILER PROJECT
MATERIAL:
SCALE: 1:10
DATE: 22-01-04
DRAWN: M.ELSTON
TITLE:
CHASSIS ASSEMBLY - REAR
DRG. No:
CH-03
ITEM
DESCRIPTION
MATERIAL
DRG. NUMBER
QTY

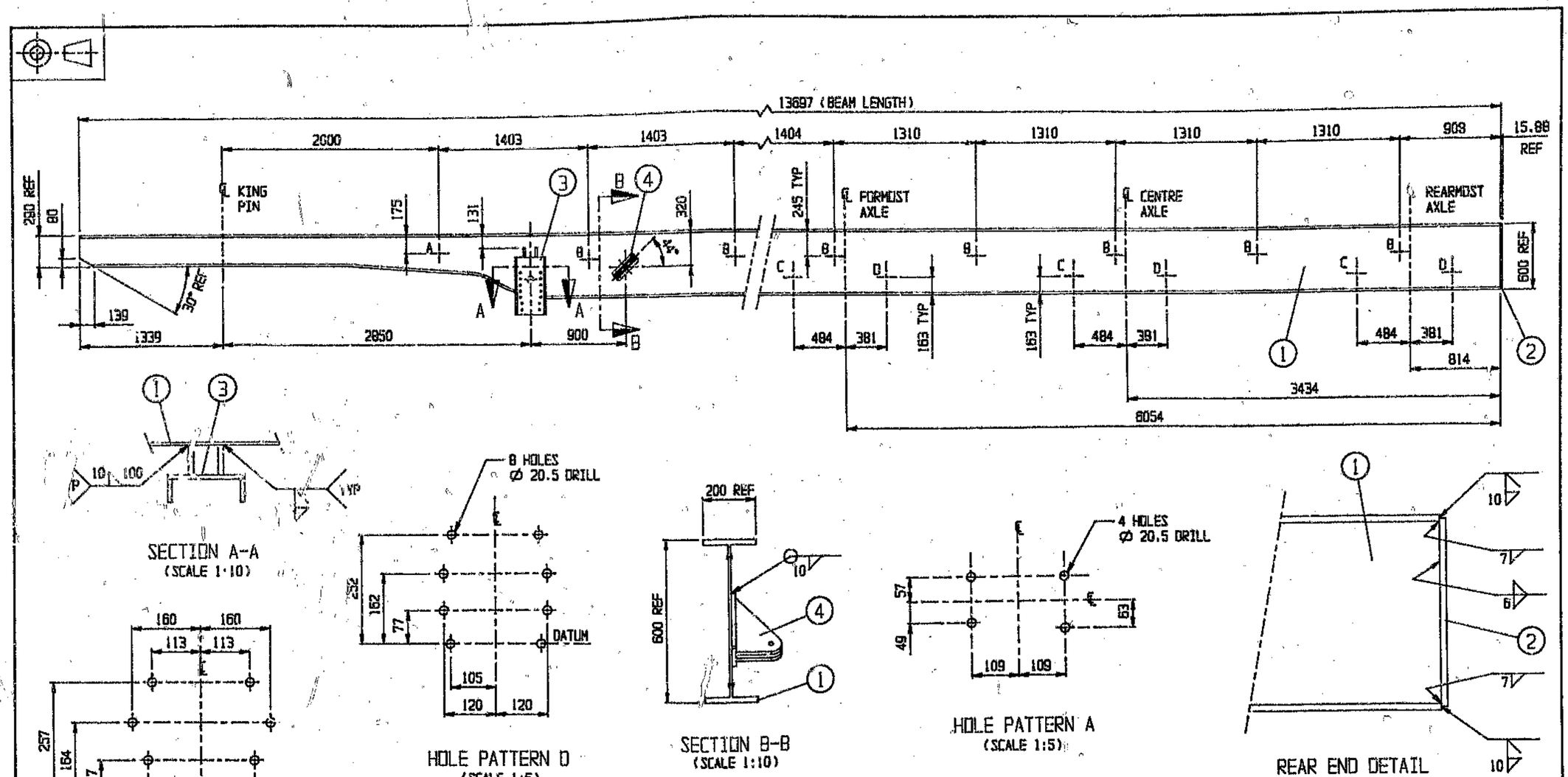

ITEM	DESCRIPTION	MATERIAL	DRG. NUMBER	QTY
4	LANDING LEG REARWARD BRACE BRACKET ASSY	6S1S - TF AL. ALLOY	LL-10	1
3	LANDING LEG MOUNTING BRACKET ASSY	6S1S - TF AL. ALLOY	LL-03	1
2	REAR FLANGE EXTENSION	6S1S - TF AL. ALLOY	CH-08	1
1	MAIN I-BEAM	ANTICORODAL - 112 ALLOY	ALUSUISSE M5260 - 415.3	1

NOTE.

1. LH AS SHOWN. RH OPPOSITE.
2. FOR TYPICAL I-BEAM CROSS-SECTION, REFER ALUSUISSE DRG. No. M5260 - 415.3.
3. FRONT AND REAR END OF BEAM TO BE CUT TO LENGTH AS INDICATED.
4. SUSPENSION HANGER AND AIR BAG CROSS-MEMBER FLANGES, AS WELL AS TORSION TUBE FLANGES, TO BE USED AS TEMPLATES WHEN DRILLING BOLT HOLES.
5. ALL WELDS TO BE MIG WELDS. FILLER ALLOY AA 5356 1.2 mm WIRE.

UWtec

UNIVERSITY OF THE WITWATERSRAND

LIGHTWEIGHT ALUMINIUM SEMI-TRAILER PROJECT

MATERIAL:	-
SCALE:	1:25
DATE:	20-01-84
DRAWN:	M.ELSTON

TITLE: MAIN CHASSIS I-BEAM ASSEMBLY

DRG. No: CH-04

25×10 32×10

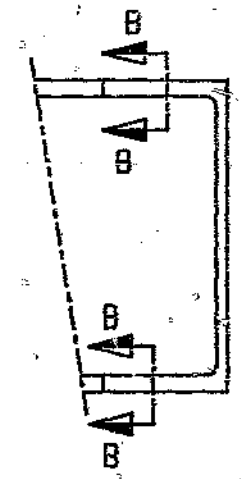

VIEW ON ARROW 'C'

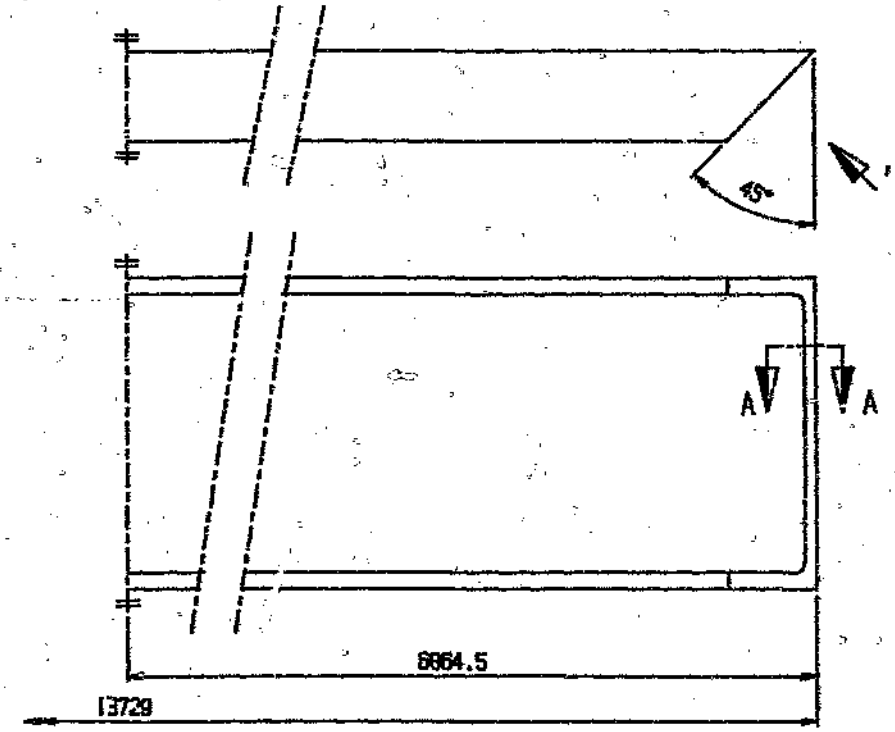

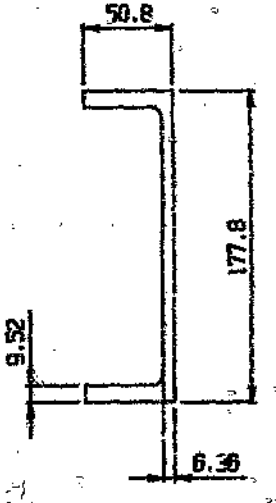

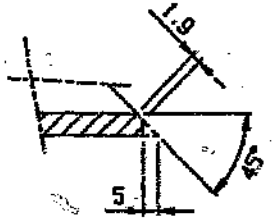

SECTION A-A
(WELD PREPARATION DETAIL)

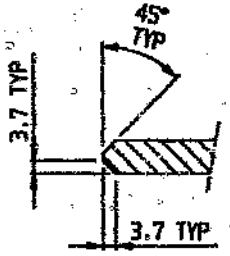

SECTION B-B
(WELD PREPARATION DETAIL)

MATERIAL: EXTRUDED ALUMINIUM CHANNEL SECTION.
177.8 x 50.8 x 9.52 x 6.36 x 13729 LG.
HULETTS SHAPE No. 16539
D54S - TF ALLOY

NOTE.

1. GRIND WELD PREPARATIONS USING NON-CARBORUNDUM GRINDING DISCS.

ITEM	DESCRIPTION	MATERIAL	DRG. NUMBER	QTY

UWtec

UNIVERSITY OF THE WITWATERSRAND
LIGHTWEIGHT ALUMINIUM SEMI-TRAILER PROJECT

MATERIAL:	
SCALE:	1:2.5
DATE:	20-1-84
DRAWN:	M.ELSTON

TITLE: SIDE RAIL

DRG. No: CH-05

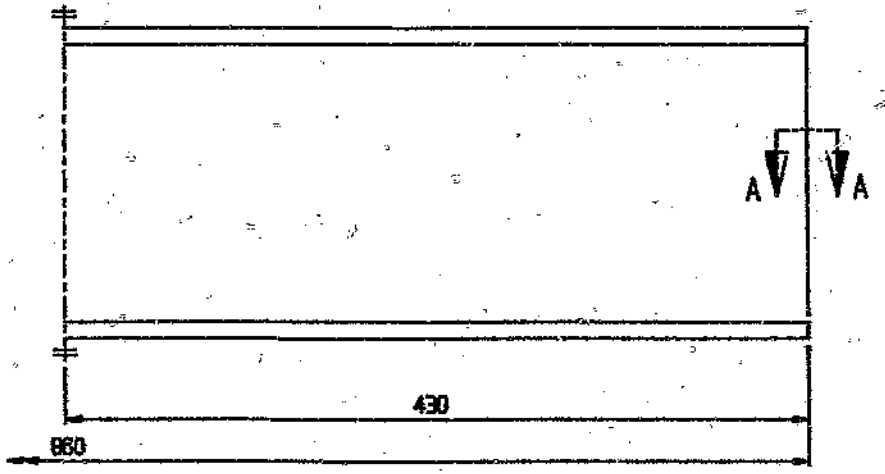

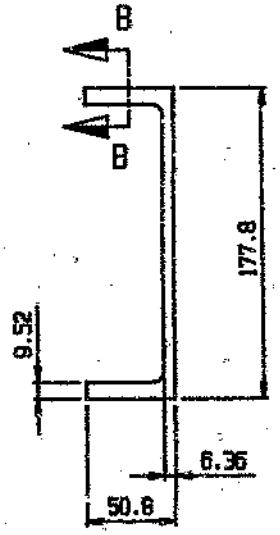

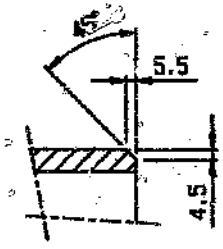

SECTION A-A
(WELD PREPARATION DETAIL)

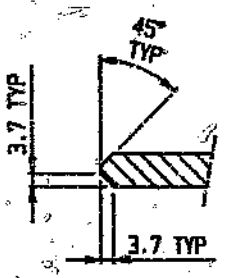

SECTION B-B
(WELD PREPARATION DETAIL)

MATERIAL: EXTRUDED ALUMINIUM CHANNEL SECTION
177.8 x 50.8 x 9.52 x 6.36 x 860 LG.
HULETTS SHAPE No. 16539
6063 - T6 ALLOY

NOTE.

1. GRIND WELD PREPARATIONS USING NON-CARBORUNDUM GRINDING DISCS.

ITEM	DESCRIPTION	MATERIAL	DRG. NUMBER	QTY

UWtec

MATERIAL:	
SCALE:	1:2.5
DATE:	20-1-84
DRAWN:	M.ELSTON

UNIVERSITY OF THE WITWATERSRAND
LIGHTWEIGHT ALUMINIUM SEMI-TRAILER PROJECT

TITLE: CENTRE SECTION OF REAR END RAIL

DRG. No: CH-06

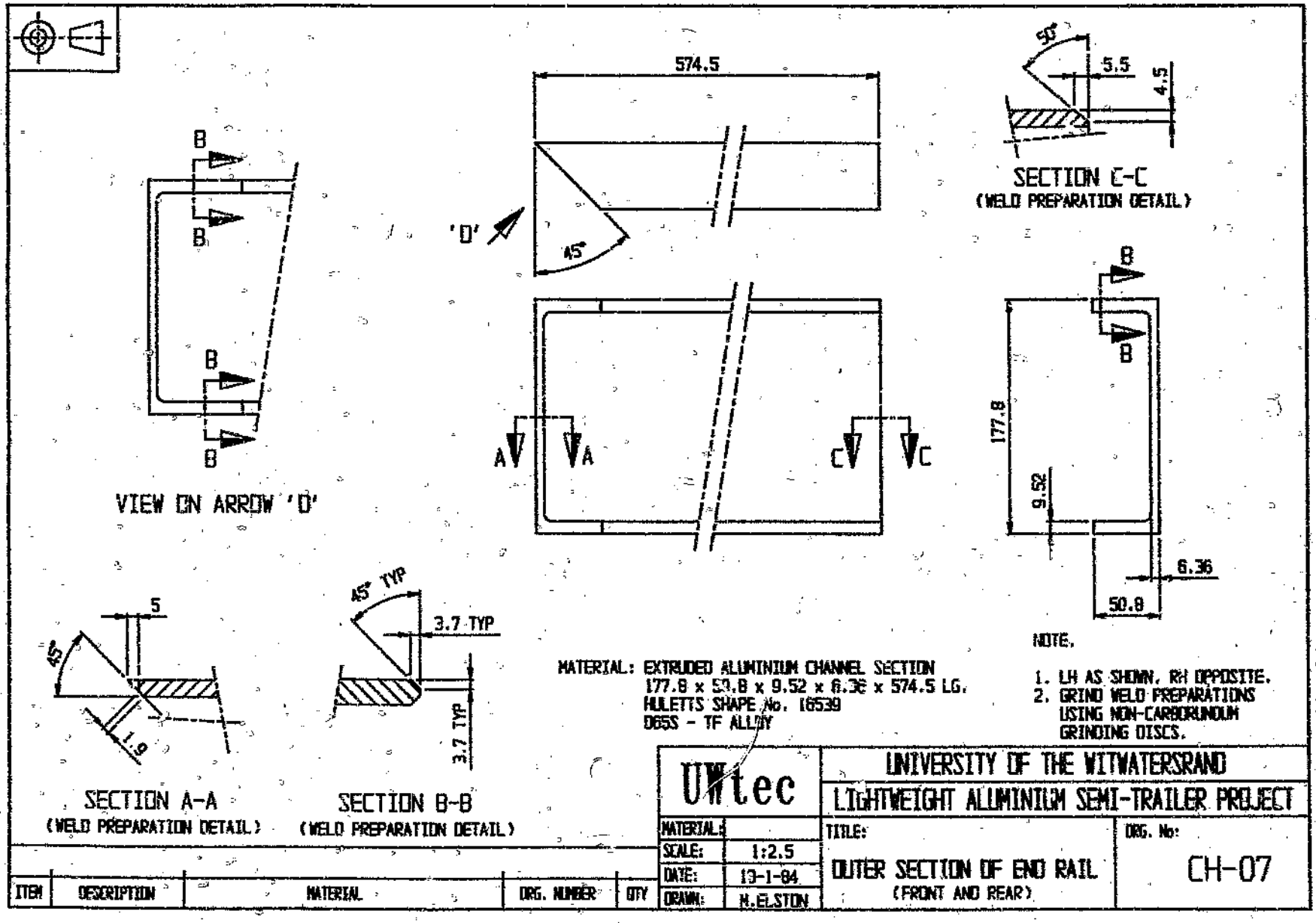
574.5
'D'
45°
A
A
C
C
B
B
B
B
VIEW ON ARROW 'D'
55°
5.5
4.5
SECTION C-C
(WELD PREPARATION DETAIL)
B
B
177.8
9.52
6.36
50.8
5
45°
1.9
SECTION A-A
(WELD PREPARATION DETAIL)
45° TYP
3.7 TYP
3.7 TYP
SECTION B-B
(WELD PREPARATION DETAIL)
MATERIAL: EXTRUDED ALUMINIUM CHANNEL SECTION
177.8 x 50.8 x 9.52 x 6.36 x 574.5 LG.
HULETTS SHAPE No. 16539
D65S - TF ALLOY
NOTE.
1. LH AS SHOWN. RH OPPOSITE.
2. GRIND WELD PREPARATIONS USING NON-CARBORUNDUM GRINDING DISCS.
UWtec
UNIVERSITY OF THE WITWATERSRAND
LIGHTWEIGHT ALUMINIUM SEMI-TRAILER PROJECT
MATERIAL:
SCALE: 1:2.5
DATE: 13-1-84
DRAWN: N.ELSTON
TITLE:
OUTER SECTION OF END RAIL
(FRONT AND REAR)
DRG. No:
CH-07
ITEM
DESCRIPTION
MATERIAL
DRG. NUMBER
QTY

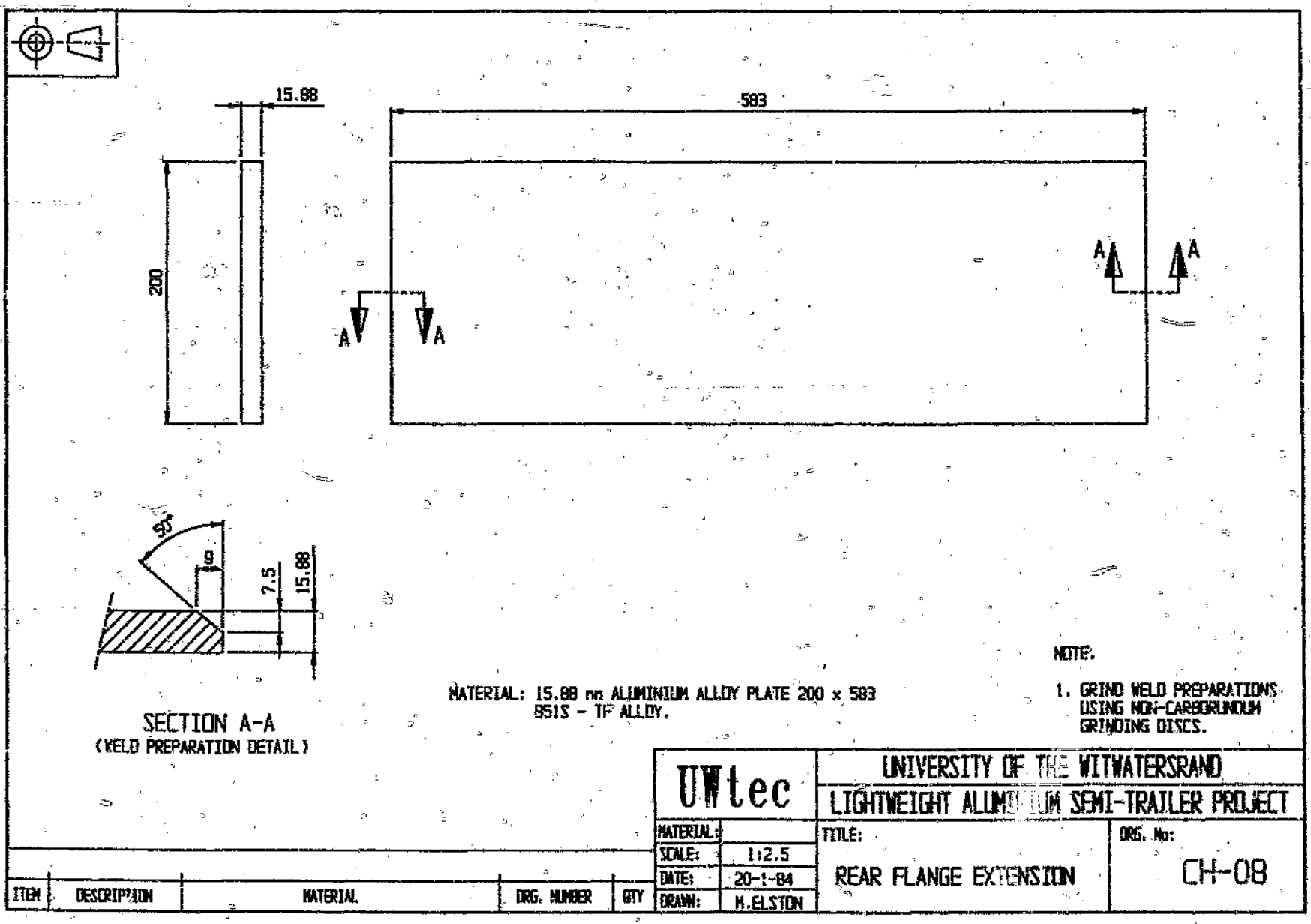

SECTION A-A
(WELD PREPARATION DETAIL)

MATERIAL: 15.88 mm ALUMINIUM ALLOY PLATE 200 x 583
9515 - TF ALLOY.

NOTE:

1. GRIND WELD PREPARATIONS USING NON-CARBORUNDUM GRINDING DISCS.

ITEM	DESCRIPTION	MATERIAL	DRG. NUMBER	QTY

UWtec

UNIVERSITY OF THE WITWATERSRAND
LIGHTWEIGHT ALUMINIUM SEMI-TRAILER PROJECT

MATERIAL:	
SCALE:	1:2.5
DATE:	20-1-84
DRAWN:	M.ELSTON

TITLE: REAR FLANGE EXTENSION

DRG. No: CH-08

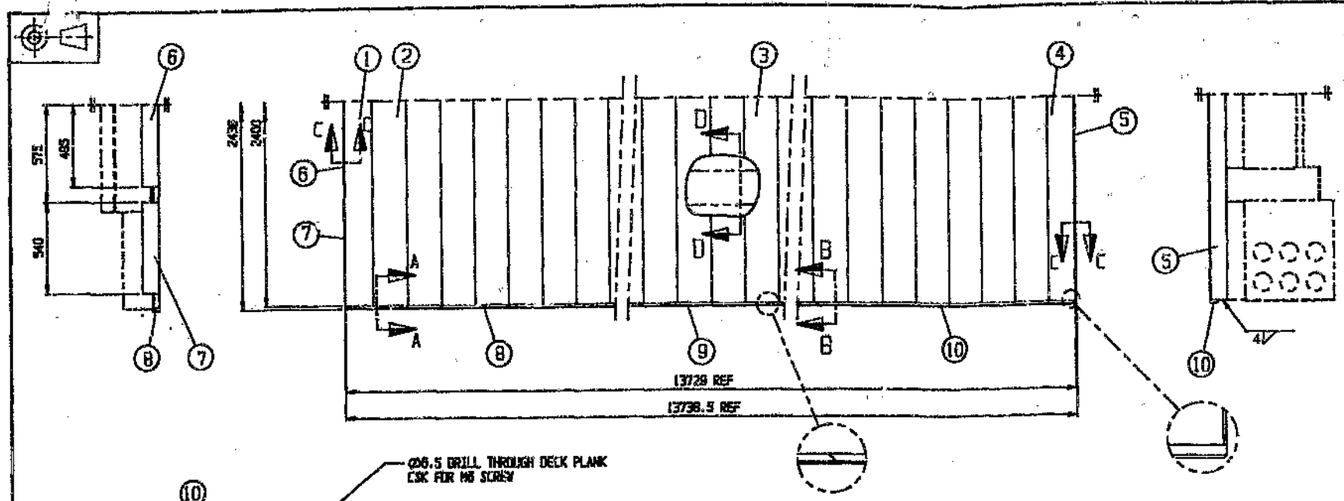

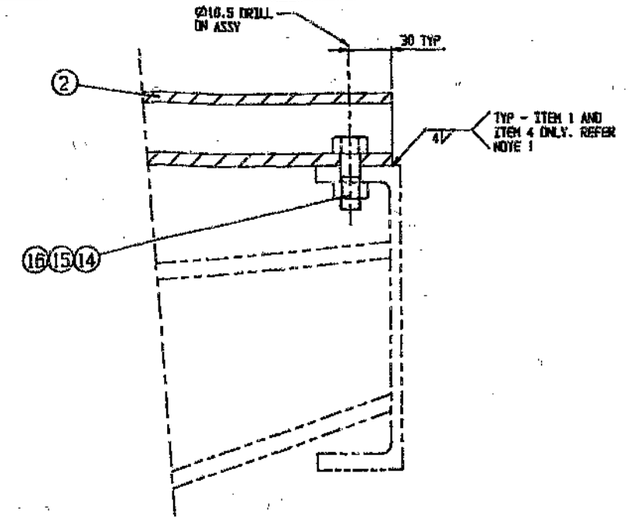

SECTION A-A
(BEFORE FITMENT OF RUBBING STRAKE)
(SCALE 1:1.5)

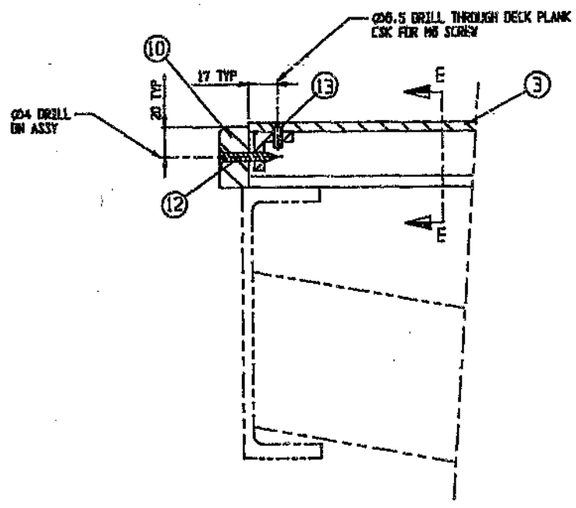

SECTION B-B
(SCALE 1:2.5)

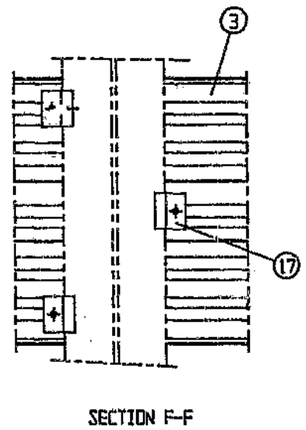

SECTION F-F
(SCALE 1:5)

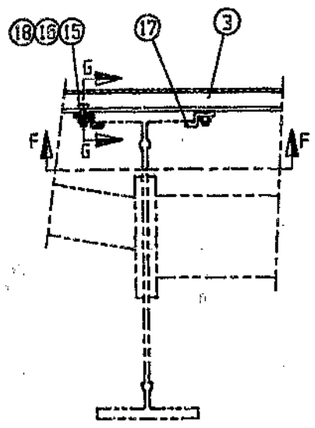

SECTION D-D
(SCALE 1:5)

SECTION G-G
(SCALE 1:1.5)

ITEM	DESCRIPTION	MATERIAL	DRG/PART NUMBER:	QTY
18	SUSPENSION SCREW	M13 x 35 SUSP. SCREW (GD 4.6), ZINC PLATED	ALBUTSSE NO 234 ØØ205 4.6VZB	138
17	DECK PLANK CLAMP SECTION	ANTICORDONAL 100/81 AL.ALLOY	DE-11	138
16	NUT	M10 NYLOC NUT (GD 8) ZINC PLATED	-	248
15	WASHER	M10 MS FLAT PREC. WASHER CADMIUM PLATED	-	248
14	BOLT	M10 x 35 HEX BOLT (GD 8.8) CADMIUM PLATED	-	148
13	CSK SCREW	MS CSK SCREW M8 x 15 CADMIUM PLATED	-	146
12	WASHER CSK SELF TAPPING SCREW	Ø25.5 x 35 - ZINC PLATED	-	146
11	ANGLE BRACKET	D655 - TF AL. ALLOY	DE-07	146
10	REAR RUBBING STRAKE	TEEKO WOOD	DE-10	1 OFF 1 NR
9	CENTRE RUBBING STRAKE	TEEKO WOOD	DE-09	2 OFF 2 NR
8	FRONT RUBBING STRAKE	TEEKO WOOD	DE-08	1 OFF 1 NR
7	DECK COVER ANGLE	D655 - TF AL. ALLOY	DE-06-02	2
6	DECK COVER ANGLE	D655 - TF AL. ALLOY	DE-06-01	1
5	DECK COVER ANGLE	D655 - TF AL. ALLOY	DE-06-03	1
4	REARMOST DECK PLANK	ANTICORDONAL 100/81 AL. ALLOY	DE-02	1
3	DECK PLANK	ANTICORDONAL 100/81 AL. ALLOY	DE-05	85
2	REMOVABLE DECK PLANK	ANTICORDONAL 100/81 AL. ALLOY	DE-04	1
1	FOREMOST DECK PLANK	ANTICORDONAL 100/81 AL. ALLOY	DE-03	1

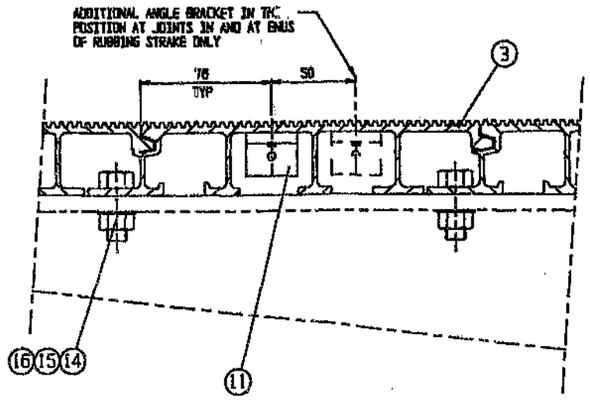

SECTION E-E
(SCALE 1:1.5)

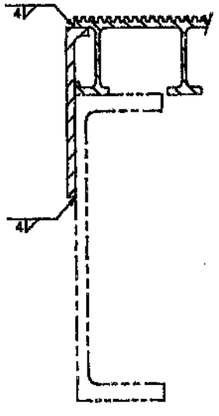

SECTION C-C
(SCALE 1:1.5)

NOTE.

1. THE DECK PLANKS TO BE ASSEMBLED ON THE CHASSIS STARTING AT THE FRONT AND PROGRESSING TOWARDS THE REAR. ITEM 1 TO BE POSITIONED ACCURATELY PERPENDICULAR TO THE LONGITUDINAL AXIS OF THE CHASSIS BEFORE IT IS BOLTED AND WELDED TO THE SIDE RAIL (REFER SECTION A-A) AND BEFORE THE REMAINING DECK PLANKS ARE FITTED. ITEM 4 TO BE FITTED LAST AND WELDED TO THE SIDE RAIL AS INDICATED.
2. THE DECK PLANK CLAMP SECTION (ITEM 17) TO BE POSITIONED ALTERNATELY INBOARD AND OUTBOARD OF THE CHASSIS I-BEAMS, AS SHOWN IN SECTION F-F, EXCEPT ABOVE THE RUBBING PLATE WHERE THEY ARE ALL TO BE MOUNTED OUTBOARD.
3. ITEMS 8,9 AND 10 TO BE COATED IN ALL SIDES WITH POLYURETHANE VARNISH AND ALLOWED TO DRY BEFORE ASSEMBLY. VARNISH TO BE TOUCHED UP AT SCREW HOLES AFTER ASSEMBLY.
4. ALL WELDS MIG WELDS, AA 5356 FILLER ALLOY 1.2mm WIRE.

UWtec	UNIVERSITY OF THE WITWATERSRAND LIGHTWEIGHT ALUMINIUM SEMI-TRAILER PROJECT	
MATERIAL:	TITLE: DECK ASSEMBLY	DRG. No: DE-01
SCALE: 1:15		
DATE: 25-02-04		
DRAWN: M.ELSTON		

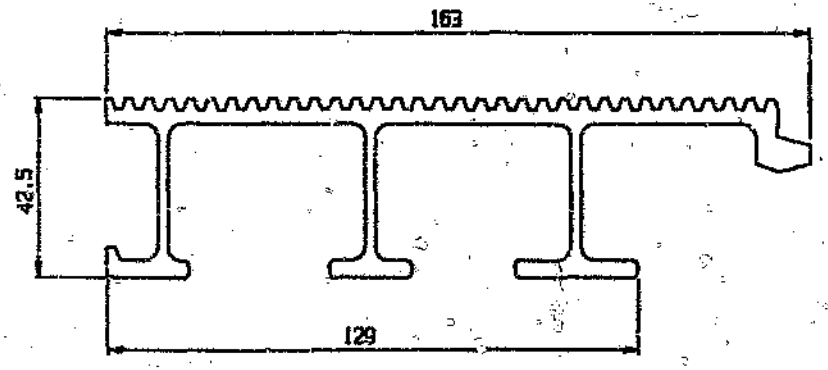

MATERIAL: EXTRUDED ALUMINIUM DECK PLANK SECTION
163 x 42.5 x 2400 LG
CUT FROM ALUSUISSE SECT. No. CH 39735
ANTICORRODAL 180/61 ALLOY

ITEM	DESCRIPTION	MATERIAL	DRG. NUMBER	QTY

UWtec

UNIVERSITY OF THE WITWATERSRAND

LIGHTWEIGHT ALUMINIUM SEMI-TRAILER PROJECT

MATERIAL:	
SCALE:	1:1
DATE:	18-10-83
DRAWN:	M.ELSTON

TITLE: REARMOST DECK PLANK

DRG. No: DE-02

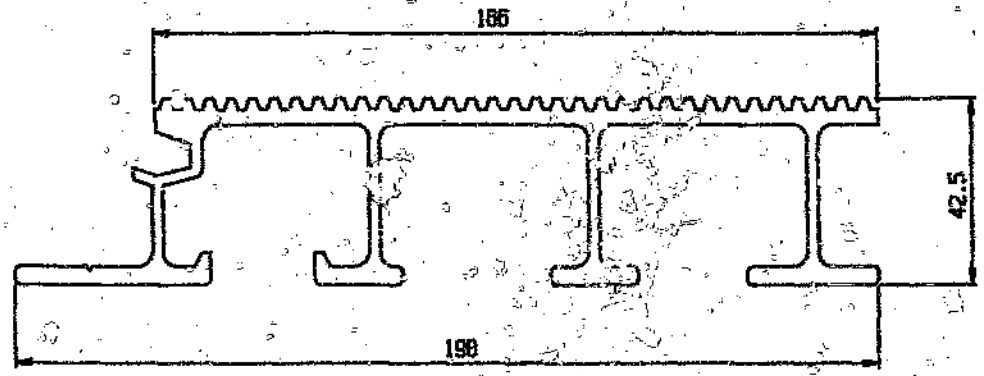

MATERIAL: EXTRUDED ALUMINIUM DECK PLANK SECTION
198 x 42.5 x 2400 LG
CUT FROM ALUSUISSE SECT. No. CH 39735
ANTICORODAL 1GD/6I ALLOY

ITEM	DESCRIPTION	MATERIAL	DRG. NUMBER	QTY

UWtec

MATERIAL:	
SCALE:	1:1
DATE:	18-10-83
DRAWN:	H. OLSTON

UNIVERSITY OF THE WITWATERSRAND
LIGHTWEIGHT ALUMINIUM SEMI-TRAILER PROJECT

TITLE: FOREMOST DECK PLANK

DRG. No: DE-03

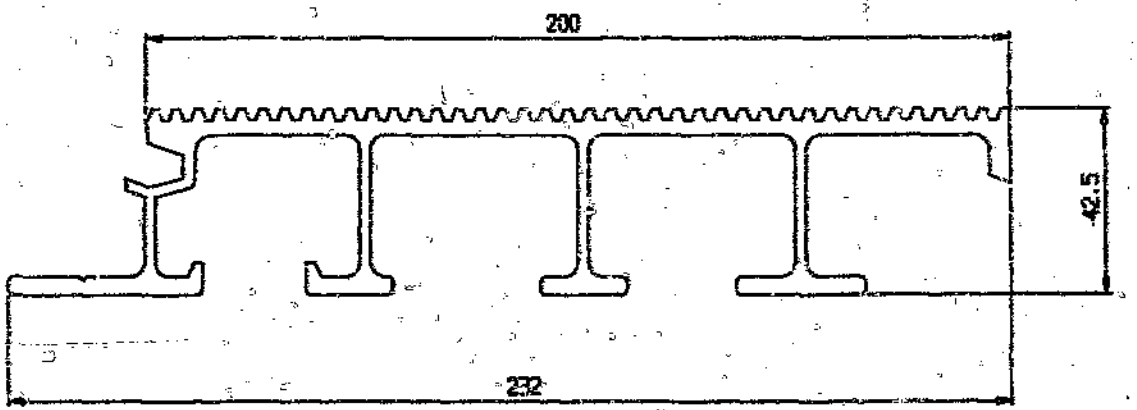

MATERIAL: EXTRUDED ALUMINIUM DECK PLANK SECTION
232 x 42.5 x 2400 LG
CUT FROM ALUSUISSE SECT. No. CH 38735
ANTICORODAL 100/21 ALLOY

ITEM	DESCRIPTION	MATERIAL	DRG. NUMBER	QTY

UWtec

MATERIAL:	
SCALE:	1:1
DATE:	18-10-83
DRAWN:	M.ELSTON

UNIVERSITY OF THE WITWATERSRAND
LIGHTWEIGHT ALUMINIUM SEMI-TRAILER PROJECT

TITLE: FIRST REMOVABLE DECK PLANK (UPPER COUPLER SECTION)

DRG. No: DE-04

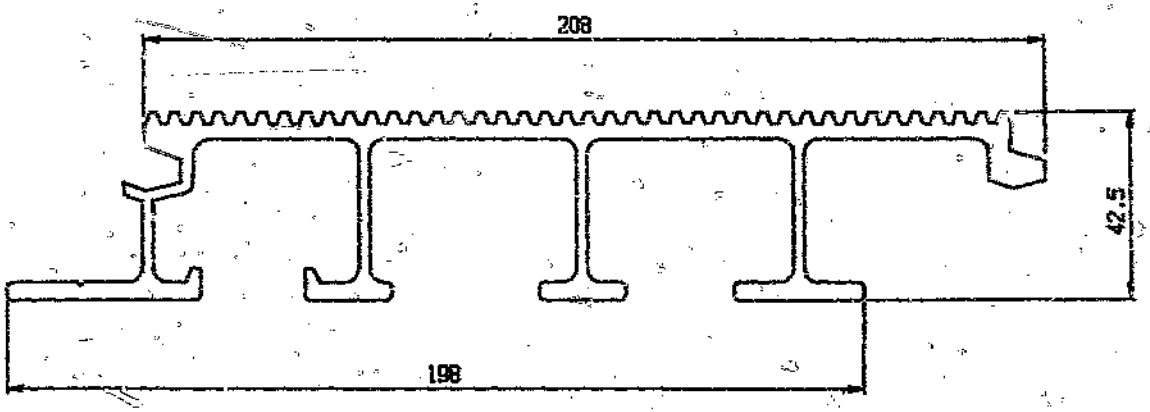

MATERIAL: EXTRUDED ALUMINIUM DECK PLANK SECTION
208 x 42.5 x 2400 LG
ALUSUISSE SECT. No. EN 36735
ANTICORODAL 100/61 ALLOY

ITEM	DESCRIPTION	MATERIAL	DRG. NUMBER	QTY

UWtec

MATERIAL:	
SCALE:	1:1
DATE:	18-10-83
DRAWN:	M.ELSTON

UNIVERSITY OF THE WITWATERSRAND
LIGHTWEIGHT ALUMINIUM SEMI-TRAILER PROJECT

TITLE: DECK PLANK

DRG. No: DE-05

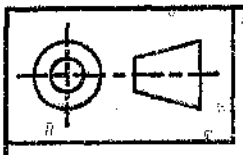

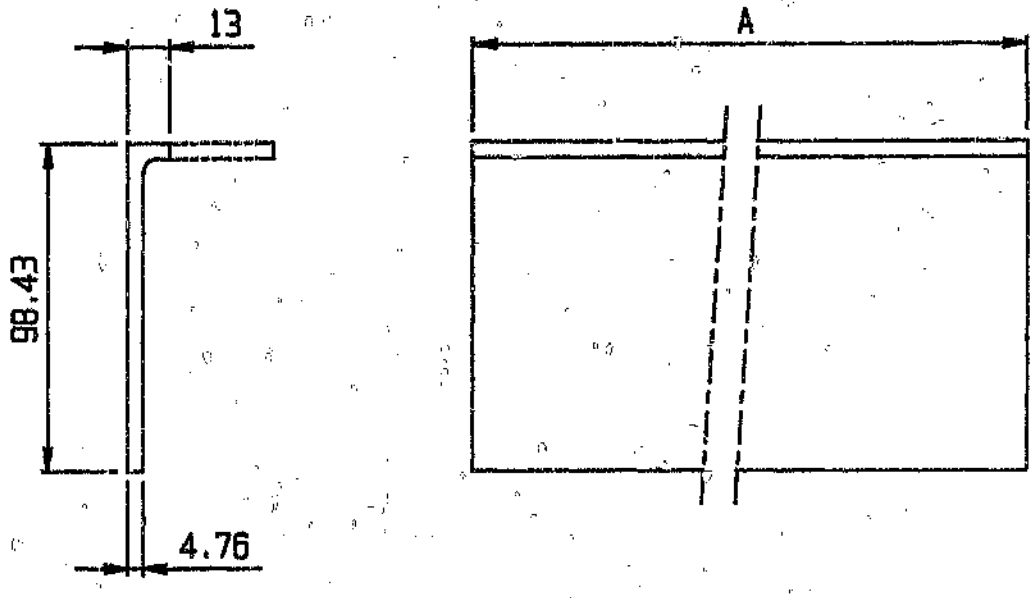

MATERIAL: EXTRUDED ALUMINIUM ANGLE SECTION
98.43 x 44.45 x 4.76 x A LG
CUT FROM HULETTS SHAPE No. 15442
D65S - TF ALLOY

NOTE.

CUT FLANGE TO 13mm
WIDTH AS INDICATED.

2400	DE-06-03
540	DE-06-02
970	DE-06-01
A	OPTION No.

UWtec

UNIVERSITY OF THE WITWATERSRAND

LIGHTWEIGHT ALUMINIUM SEMI-TRAILER PROJECT

MATERIAL:	
SCALE:	1:2
DATE:	28-10-83
DRAWN:	M.ELSTON

TITLE: DECK COVER ANGLE

DRG. No: DE-06

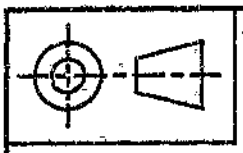

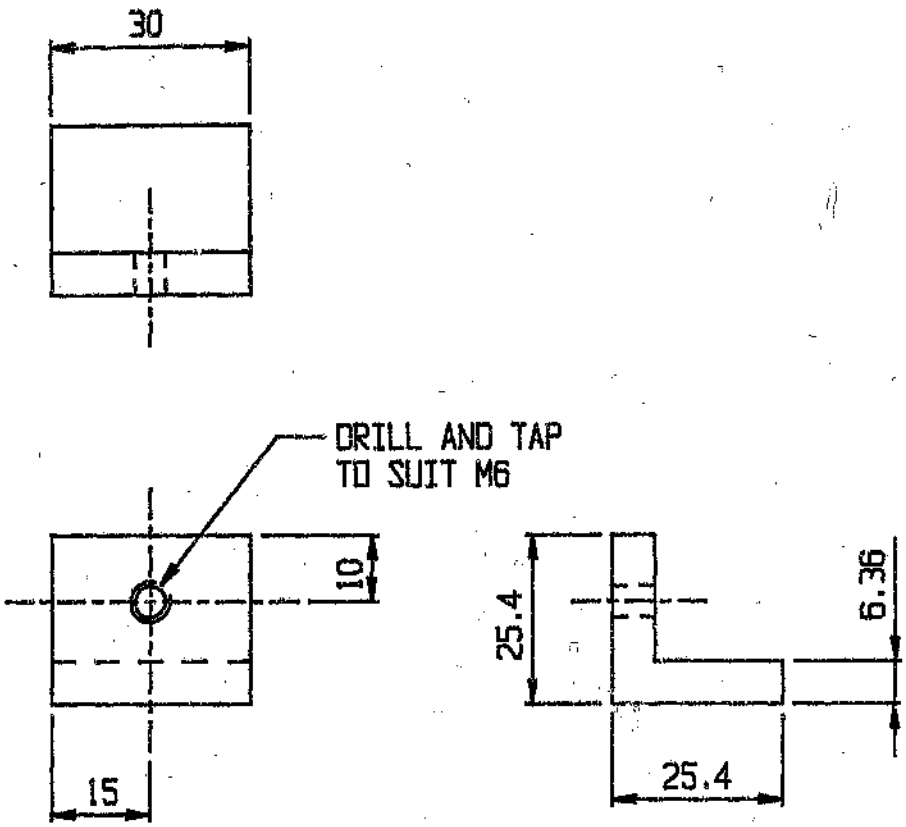

MATERIAL: EXTRUDED ALUMINIUM ANGLE SECTION
25.4 x 25.4 x 6.36 x 30 LG
HULETTS SHAPE No. 15158
D65S - TF ALLOY

UWtec		UNIVERSITY OF THE WITWATERSRAND	
		LIGHTWEIGHT ALUMINIUM SEMI-TRAILER PROJECT	
MATERIAL:		TITLE:	DRG. No:
SCALE:	1:1	ANGLE BRACKET FOR RUBBING STRAKE	DE-07
DATE:	23-08-84		
DRAWN:	M.ELSTON		

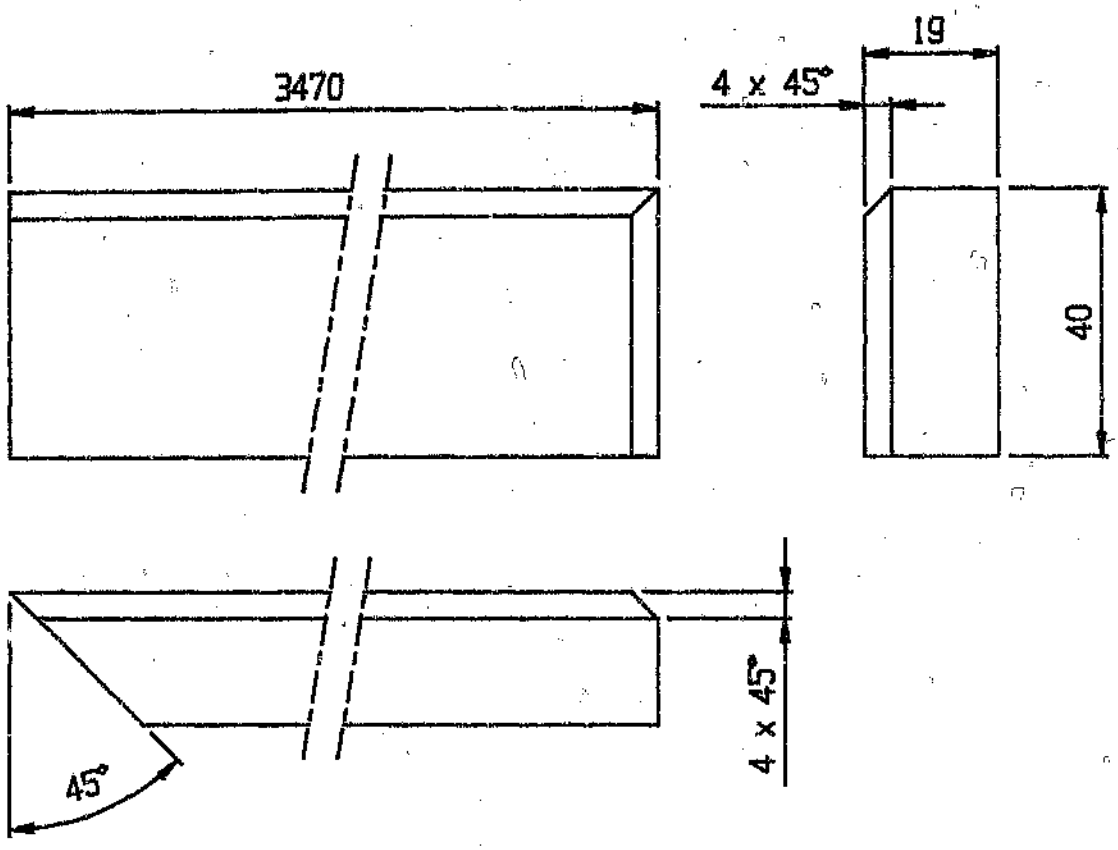

MATERIAL: IROKO WOOD 19 x 40 x 3470 LG

NOTE:

1. LH AS SHOWN
   RH OPPOSITE

UWtec		UNIVERSITY OF THE WITWATERSRAND	
		LIGHTWEIGHT ALUMINIUM SEMI-TRAILER PROJECT	
MATERIAL:		TITLE: FRONT PORTION OF RUBBING STRAKE	DRG. No: DE-08
SCALE:	1:1		
DATE:	23-08-84		
DRAWN:	M.ELSTON		

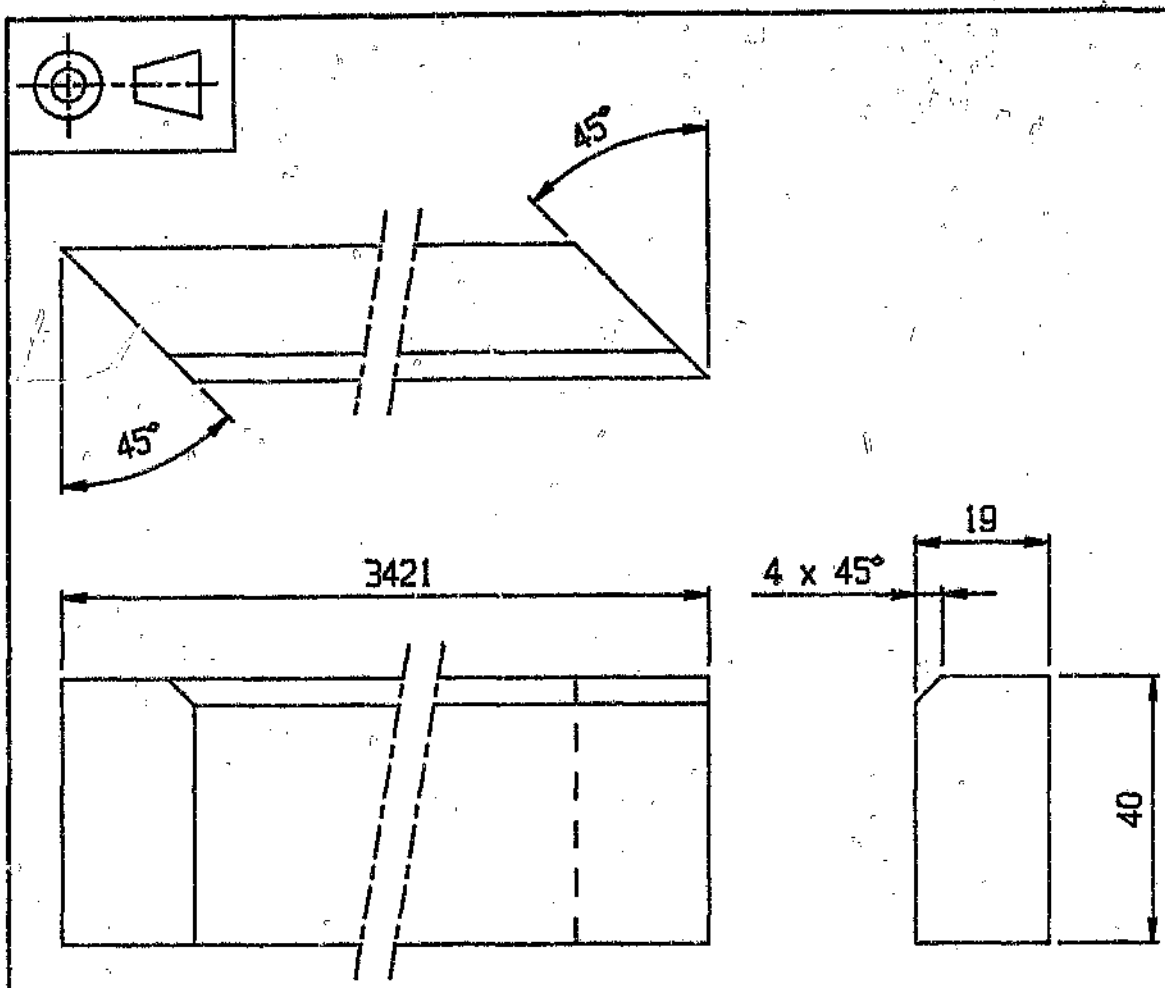

MATERIAL: IROKO WOOD 19 x 40 x 3421 LG

NOTE:

1. LH AS SHOWN
   RH OPPOSITE

UWtec	UNIVERSITY OF THE WITWATERSRAND LIGHTWEIGHT ALUMINIUM SEMI-TRAILER PROJECT		
MATERIAL:		TITLE:	DRG. No:
SCALE:	1:1	CENTRE PORTION OF RUBBING STRAKE	DE-09
DATE:	23-08-84		
DRAWN:	M.ELSTON		

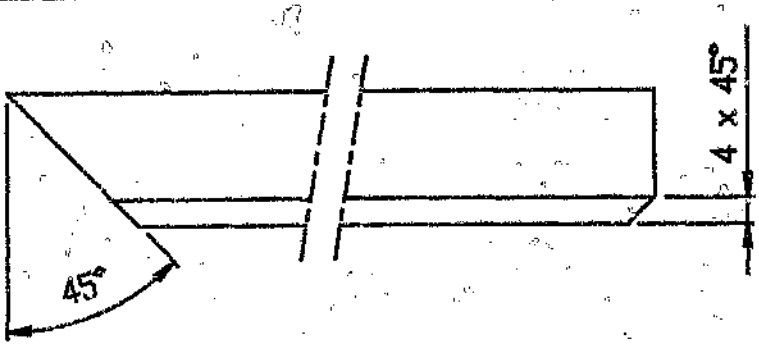

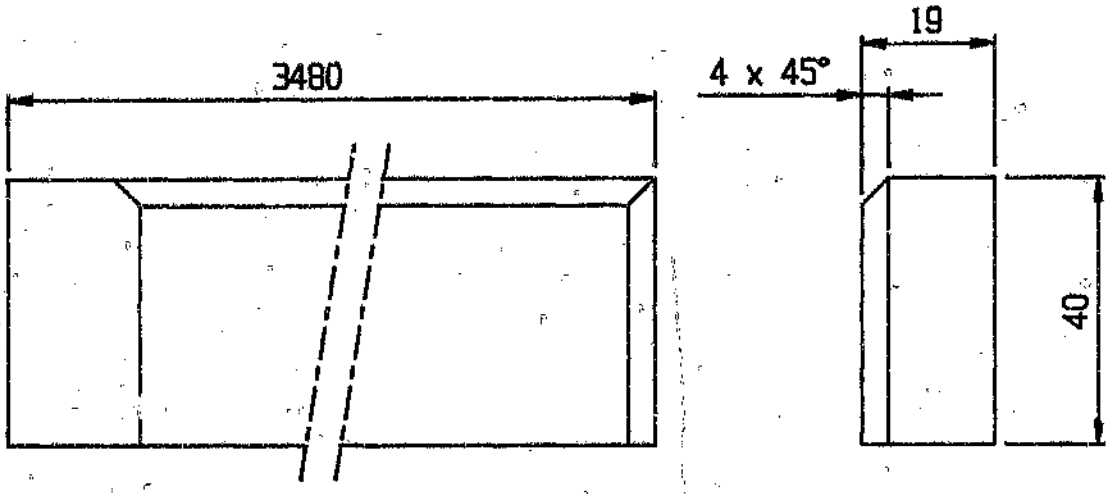

MATERIAL: IROKO WOOD 19 x 40 x 3480 LG

NOTE:

1. LH AS SHOWN
   RH OPPOSITE

UWtec		UNIVERSITY OF THE WITWATERSRAND	
		LIGHTWEIGHT ALUMINIUM SEMI-TRAILER PROJECT	
MATERIAL:		TITLE:	DRG. No:
SCALE:	1:1	REAR PORTION OF RUBBING STRAKE	DE-10
DATE:	23-08-84		
DRAWN:	M.ELSTON		

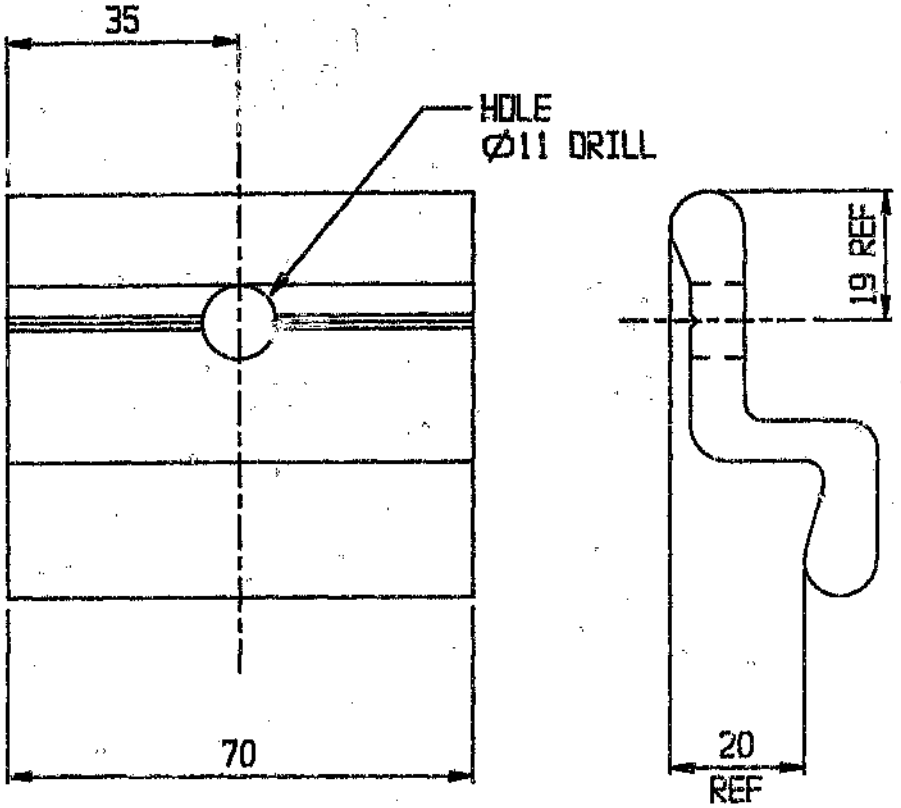

MATERIAL: EXTRUDED ALUMINIUM CLAMP SECTION
ALUSUISE SECT. No. CH46698.
ANTICORODAL 100/61 ALLOY

UWtec	UNIVERSITY OF THE WITWATERSRAND		
	LIGHTWEIGHT ALUMINIUM SEMI-TRAILER PROJECT		
MATERIAL:		TITLE: DECK PLANK CLAMP SECTION	DRG. No: DE-11
SCALE:	1:1		
DATE:	25-11-83		
DRAWN:	M.ELSTON		

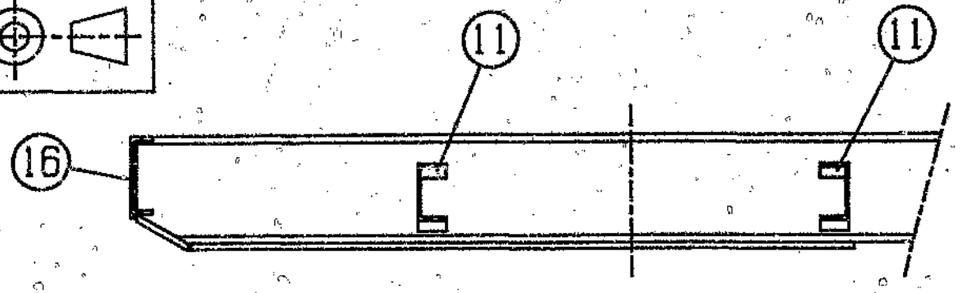

SECTION Y-Y

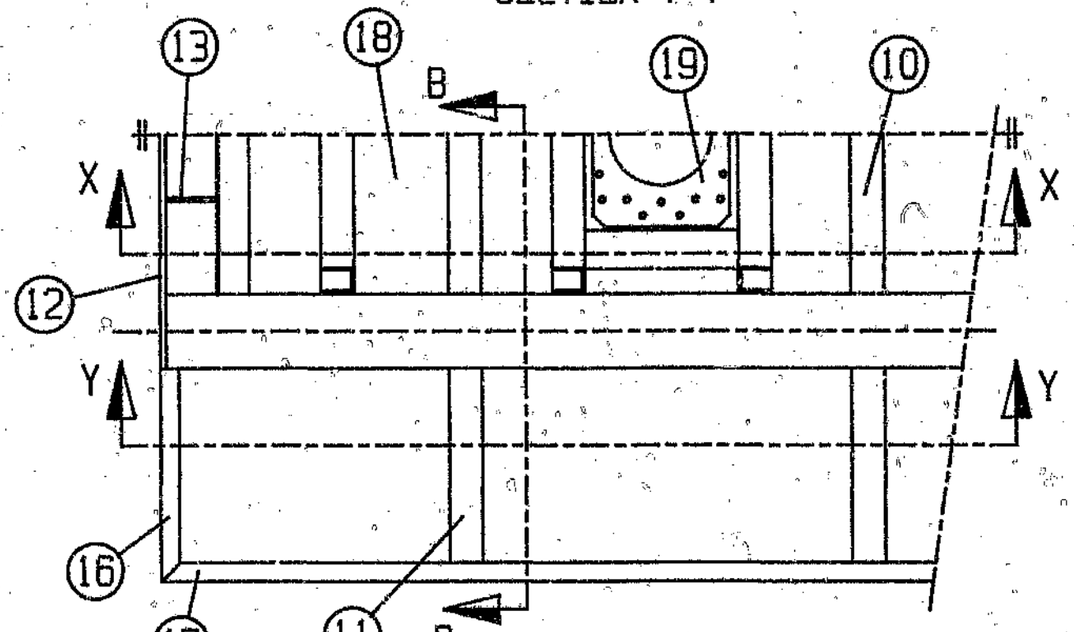

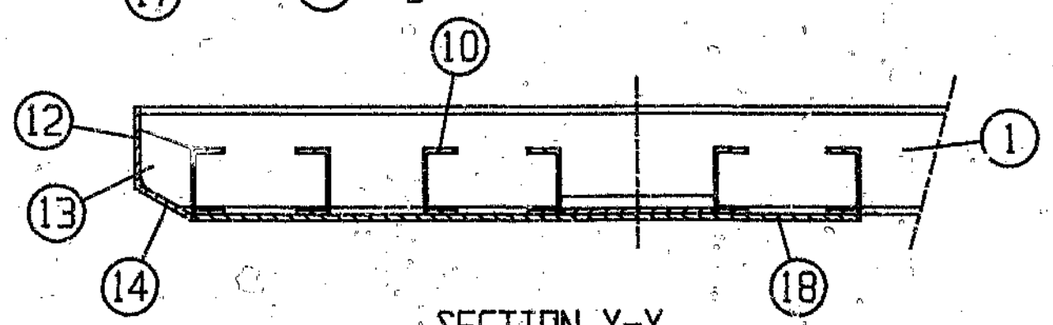

SECTION X-X

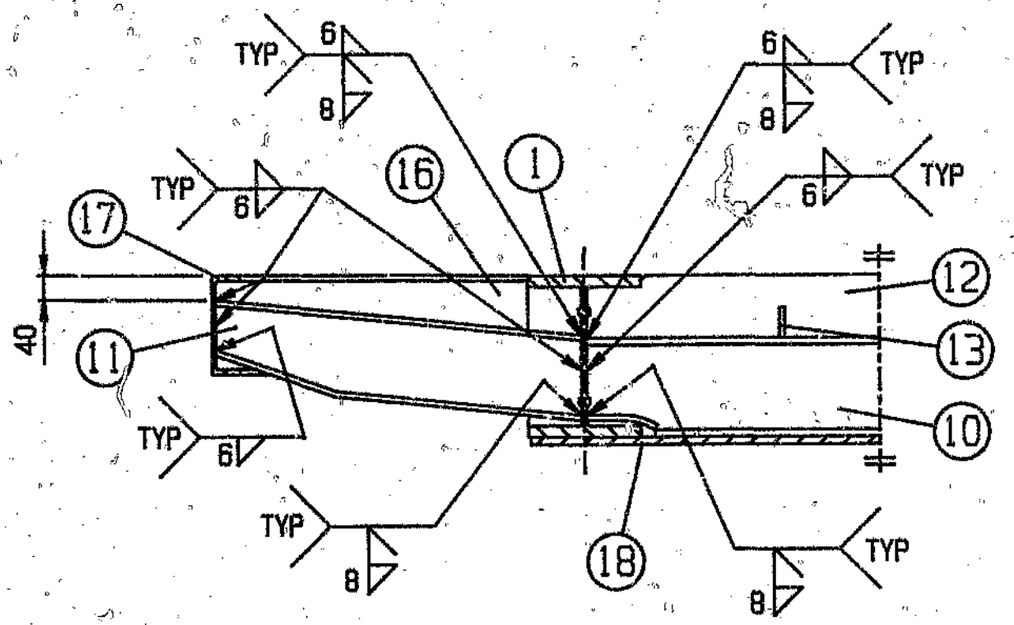

SECTION B-B

NOTE.

1. REFER DRG. CH-01 FOR MATERIAL LIST.
2. ALL WELDS MIG WELDS. FILLER ALLOY AA 5356 1.2mm WIRE.

ITEM	DESCRIPTION	MATERIAL	DRG. NUMBER	QTY

UWtec	UNIVERSITY OF THE WITWATERSRAND
	LIGHTWEIGHT ALUMINIUM SEMI-TRAILER PROJECT
MATERIAL:	
SCALE:	1:15/1:10
DATE:	20-01-84
DRAWN:	M.ELSTON
TITLE:	UPPER COUPLER ASSEMBLY
DRG. No:	UC-01

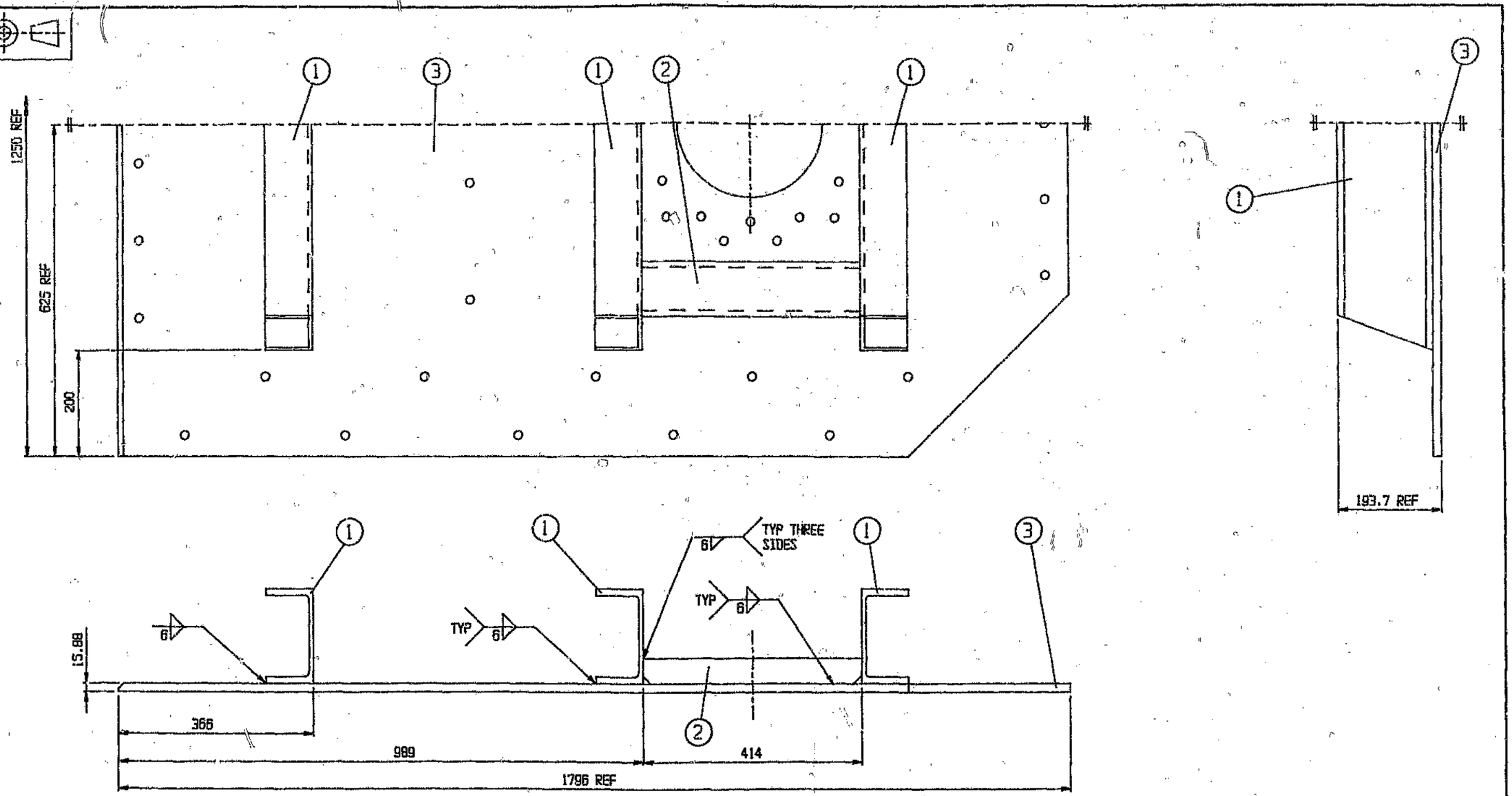

ITEM	DESCRIPTION	MATERIAL	DRG. NUMBER	QTY
9	WASHER	M12 MS FLAT PREC. WASHER, CADMIUM PLATED	-	15
8	NUT	M12 CLEVELOC NUT (GD 8), CADMIUM PLATED	-	15
7	CSK CAP SCREW	M12 x 50 CSK CAP SCREW (GD 8.8), CADMIUM PLATED	-	15
6	WASHER	M16 MS FLAT PREC. WASHER, CADMIUM PLATED	-	20
5	NUT	M16 CLEVELOC NUT (GD 8), CADMIUM PLATED	-	20
4	CSK CAP SCREW	M16 x 70 CSK CAP SCREW (GD 8.8), CADMIUM PLATED	-	20
3	RUBBING PLATE	B51S - TF AL. ALLOY	UC-03	1
2	LONGITUDINAL KING-PIN BRACE	D65S - TF AL. ALLOY	UC-06	2
1	RUBBING PLATE CROSS BRACE	D65S - TF AL. ALLOY	UC-07	3

NOTE.

1. CSK FOR ALL MOUNTING BOLT HOLES TO BE ON UNDERSIDE OF RUBBING PLATE.
2. ALL WELDS MIG WELDS. FILLER ALLOY AA 5356 1.2 mm WIRE.

UWtec

UNIVERSITY OF THE WITWATERSRAND

LIGHTWEIGHT ALUMINIUM SEMI-TRAILER PROJECT

MATERIAL:	
SCALE:	1:5
DATE:	15-02-84
DRAWN:	M.ELSTON

TITLE: RUBBING PLATE ASSEMBLY

DRG. No: UC-02

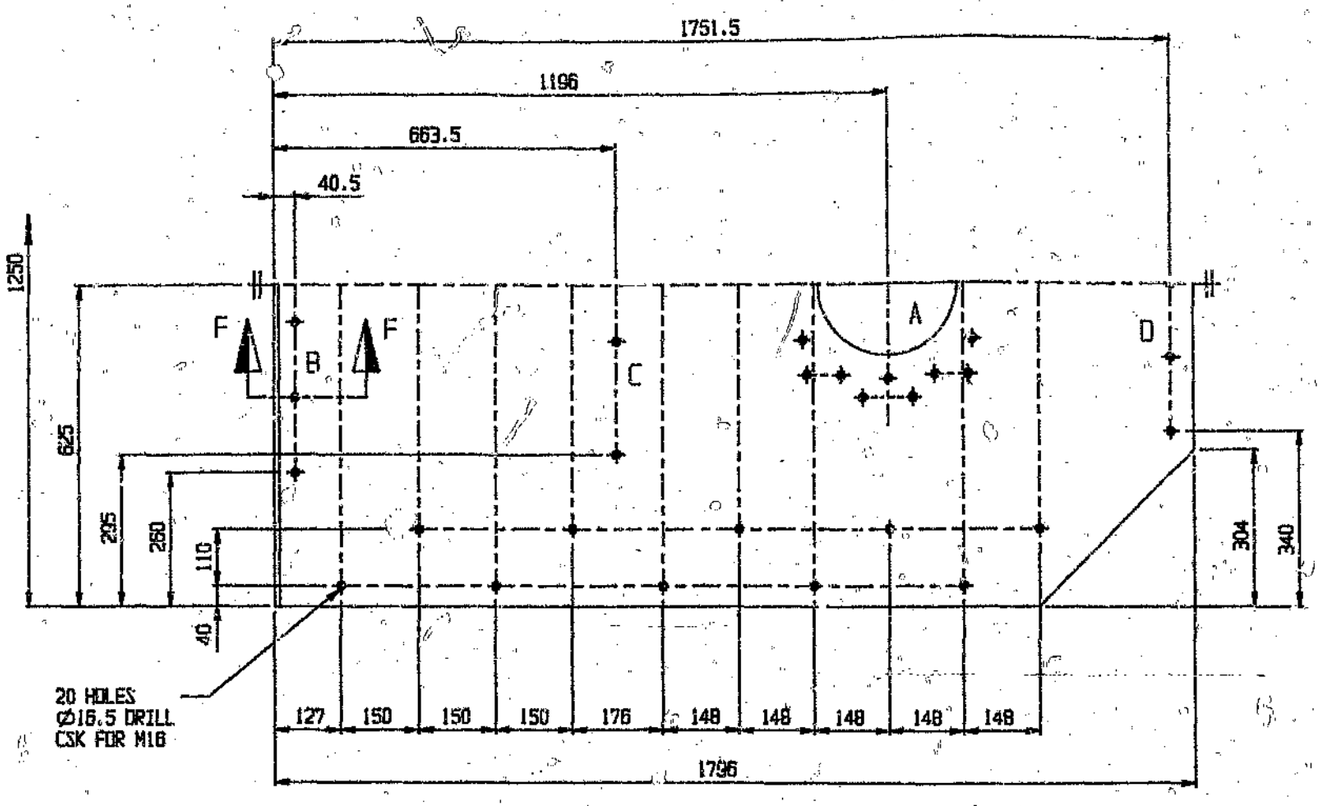

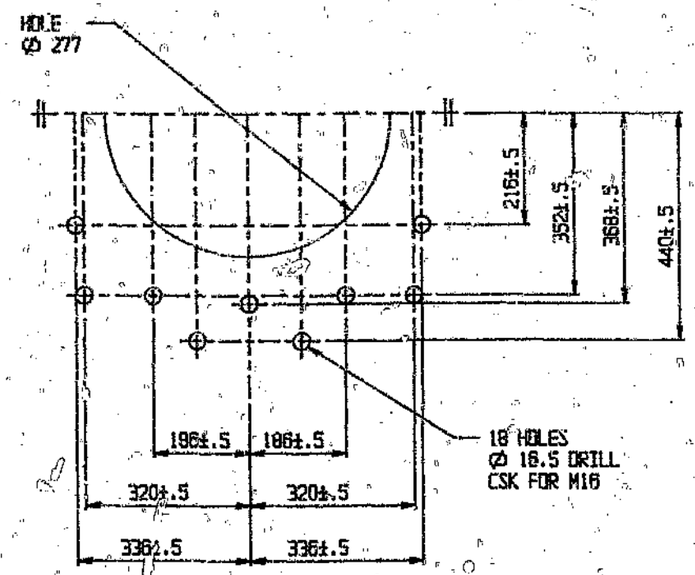

HOLE PATTERN A

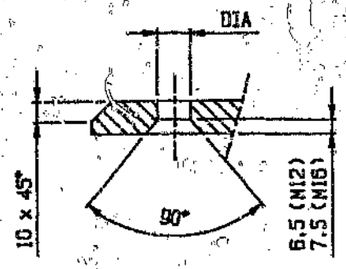

SECTION F-F
(SHOWING TYPICAL CSK DETAIL)

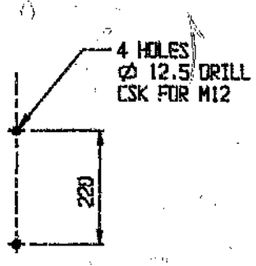

HOLE PATTERN C

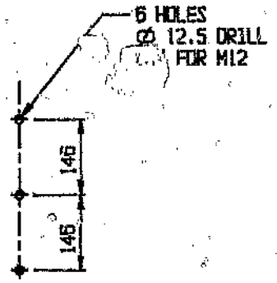

HOLE PATTERN B

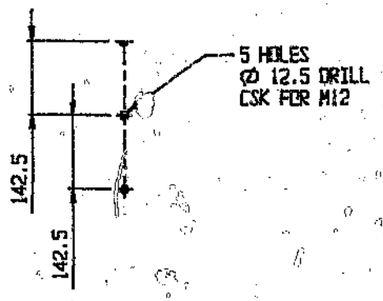

HOLE PATTERN D

MATERIAL: 15.88 mm ALUMINIUM ALLOY PLATE 1798 x 1250
B51S - TF ALLOY.

NOTE.

1. ALL CSK HOLES TO be DRILLED FROM UNDERSIDE OF RUBBING PLATE AS SHOWN IN SECTION F-F.

ITEM	DESCRIPTION	MATERIAL	DRG. NUMBER	QTY

UWtec	UNIVERSITY OF THE WITWATERSRAND
	LIGHTWEIGHT ALUMINIUM SEMI-TRAILER PROJECT
MATERIAL:	
SCALE:	1:7.5
DATE:	8-03-84
DRAWN:	M. ELSTON
TITLE:	RUBBING PLATE (PLASMA CUTTING & DRILL DETAIL)
DRG. No:	UC-03

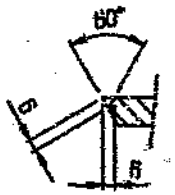

SECTION A-A
(WELD PREPARATION DETAIL)

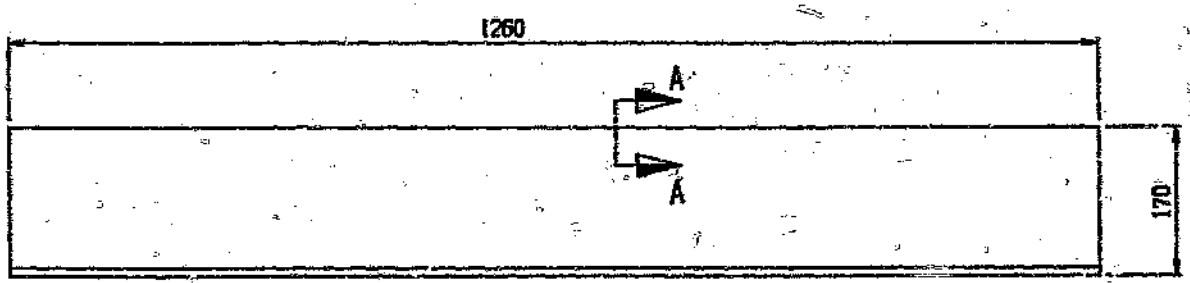

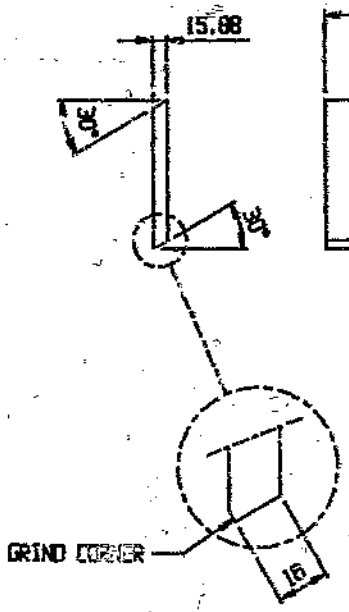

MATERIAL: 15.88mm ALUMINIUM ALLOY PLATE 170 x 1260
8515 - TF ALLOY

NOTE.

1. GRIND CORNER AND WELD PREPARATIONS USING NON-CARBORUNDUM GRINDING DISCS.

ITEM	DESCRIPTION	MATERIAL	DRG. NUMBER	QTY

UWtec

UNIVERSITY OF THE WITWATERSRAND

LIGHTWEIGHT ALUMINIUM SEMI-TRAILER PROJECT

MATERIAL:	
SCALE:	1:5
DATE:	20-1-84
DRAWN:	M. ELSTON

TITLE: RUBBING PLATE LEAD-IN PLATE

DRG. No: UC-04

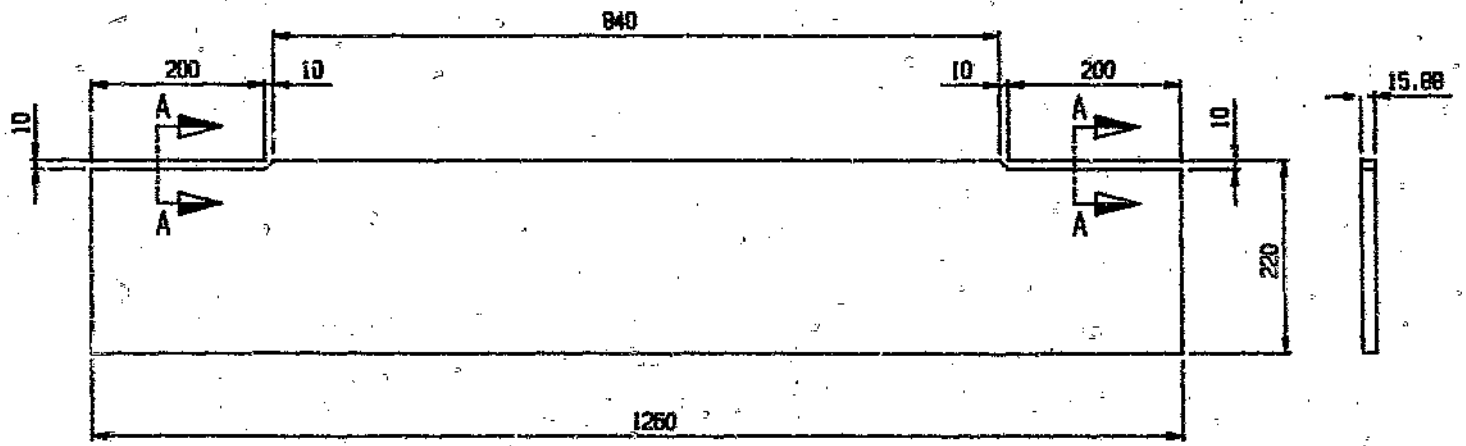

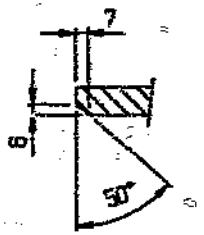

SECTION A-A
(WELD PREPARATION DETAIL)

MATERIAL: 15.88mm ALUMINIUM ALLOY PLATE 220 x 1260
8515 - TF ALLOY

NOTE:

1. GRIND WELD PREPARATIONS USING NON-CARBORUNDUM GRINDING DISCS.

ITEM	DESCRIPTION	MATERIAL	DRG. NUMBER	QTY

UWtec

UNIVERSITY OF THE WITWATERSRAND

LIGHTWEIGHT ALUMINIUM SEMI-TRAILER PROJECT

MATERIAL:	
SCALE:	1:5
DATE:	18-1-04
DRAWN:	M. ELSTON

TITLE: FRONT PLATE

DRG. No: UC-05

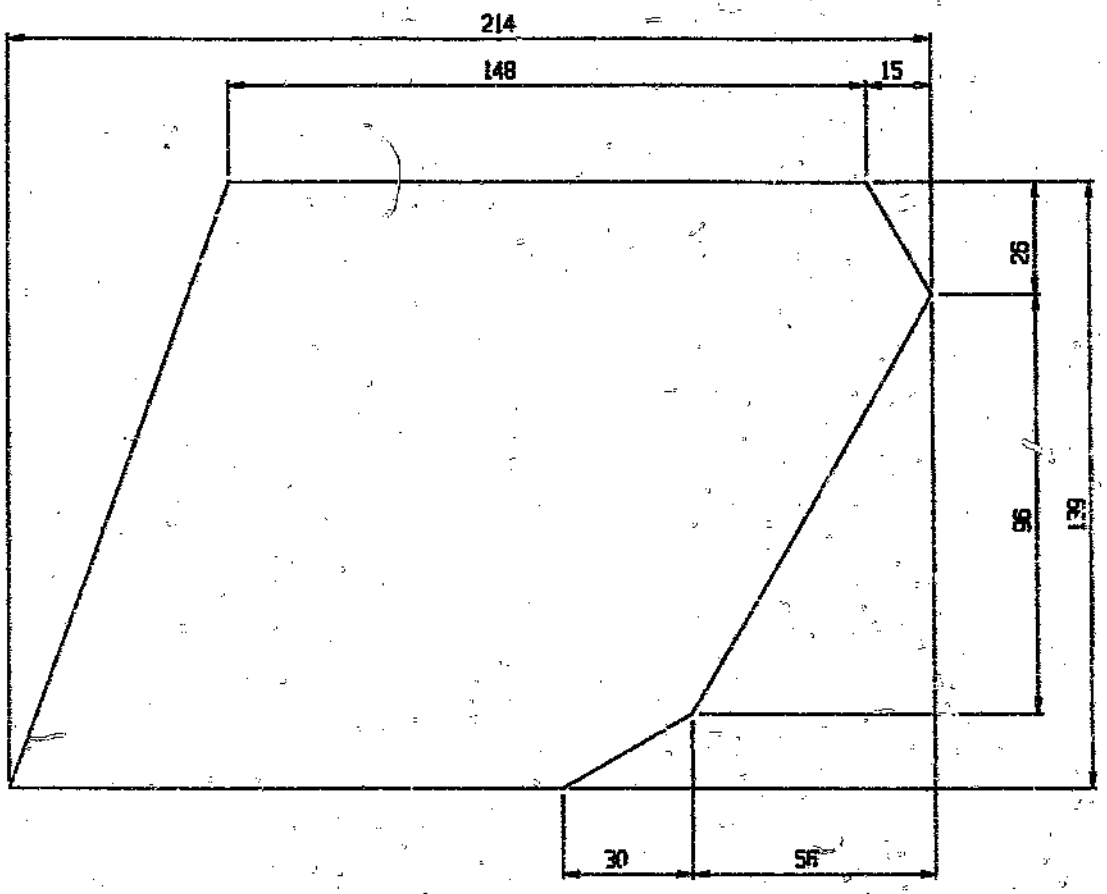

MATERIAL: 10mm ALUMINIUM PLATE 214 x 139
-8515 - TF ALLOY

ITEM	DESCRIPTION	MATERIAL	DRG. NUMBER	QTY

UWtec

UNIVERSITY OF THE WITWATERSRAND

LIGHTWEIGHT ALUMINIUM SEMI-TRAILER PROJECT

MATERIAL:	
SCALE:	1:1
DATE:	22-01-98
DRAWN:	M.E.STON

TITLE: FRONT PLATE GUSSET

DRG. No: UC-06

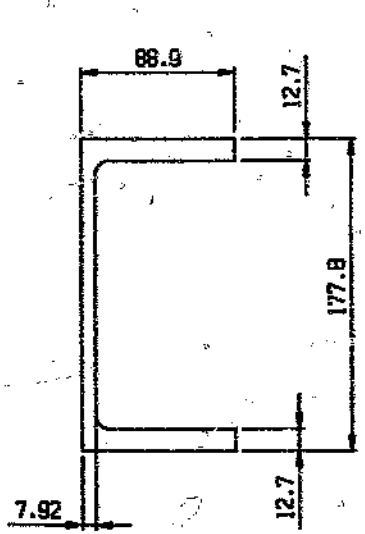

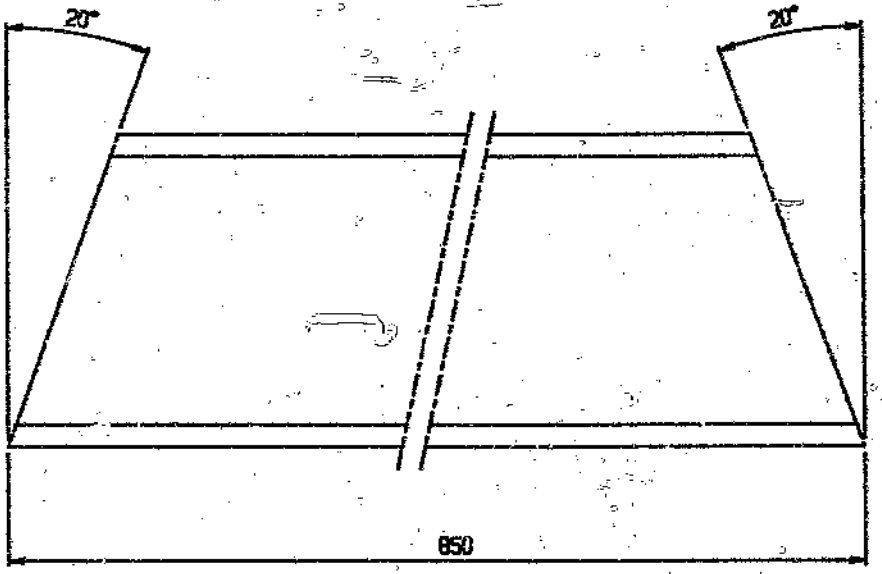

MATERIAL: EXTRUDED ALUMINIUM CHANNEL SECTION
117.8 x 88.9 x 12.7 x 9.52 x 850 LG
HULETTS TYPE 3 CHANNEL - SHAPE No. 16234
6055 - TF ALLOY

ITEM	DESCRIPTION	MATERIAL	DRG. NUMBER	QTY

UWtec

UNIVERSITY OF THE WITWATERSRAND
LIGHTWEIGHT ALUMINIUM SEMI-TRAILER PROJECT

MATERIAL:	
SCALE:	1:2.5
DATE:	21-02-84
DRAWN:	M.ELSTON

TITLE: RUBBING PLATE CROSS BRACE

DRG. No: UC-07

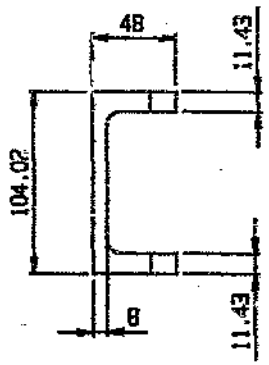

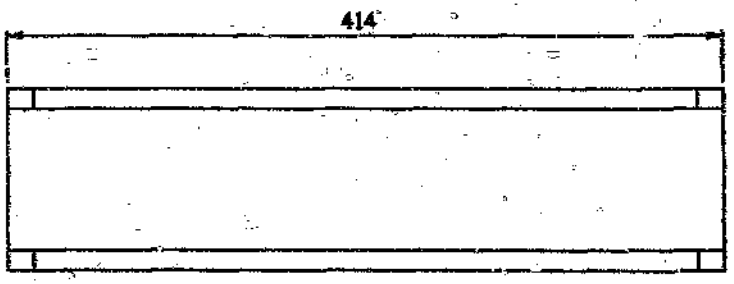

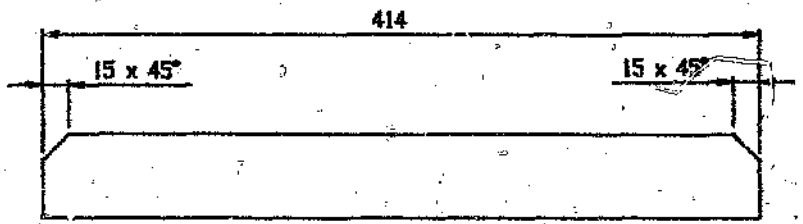

MATERIAL: EXTRUDED ALUMINIUM CHANNEL SECTION
104.02 x 48 x 11.43 x 8 x 414 LG
HULETTS TYPE 2 CHANNEL - SHAPE No. 16293.
D65S - TF ALLOY

ITEM	DESCRIPTION	MATERIAL	DRG. NUMBER	QTY

UWtec

UNIVERSITY OF THE WITWATERSRAND
LIGHTWEIGHT ALUMINIUM SEMI-TRAILER PROJECT

MATERIAL:	
SCALE:	1:2.5
DATE:	20-2-84
DRAWN:	M.ELSTON

TITLE: LONGITUDINAL KING-PIN BRACE

DRG. No: UC-08

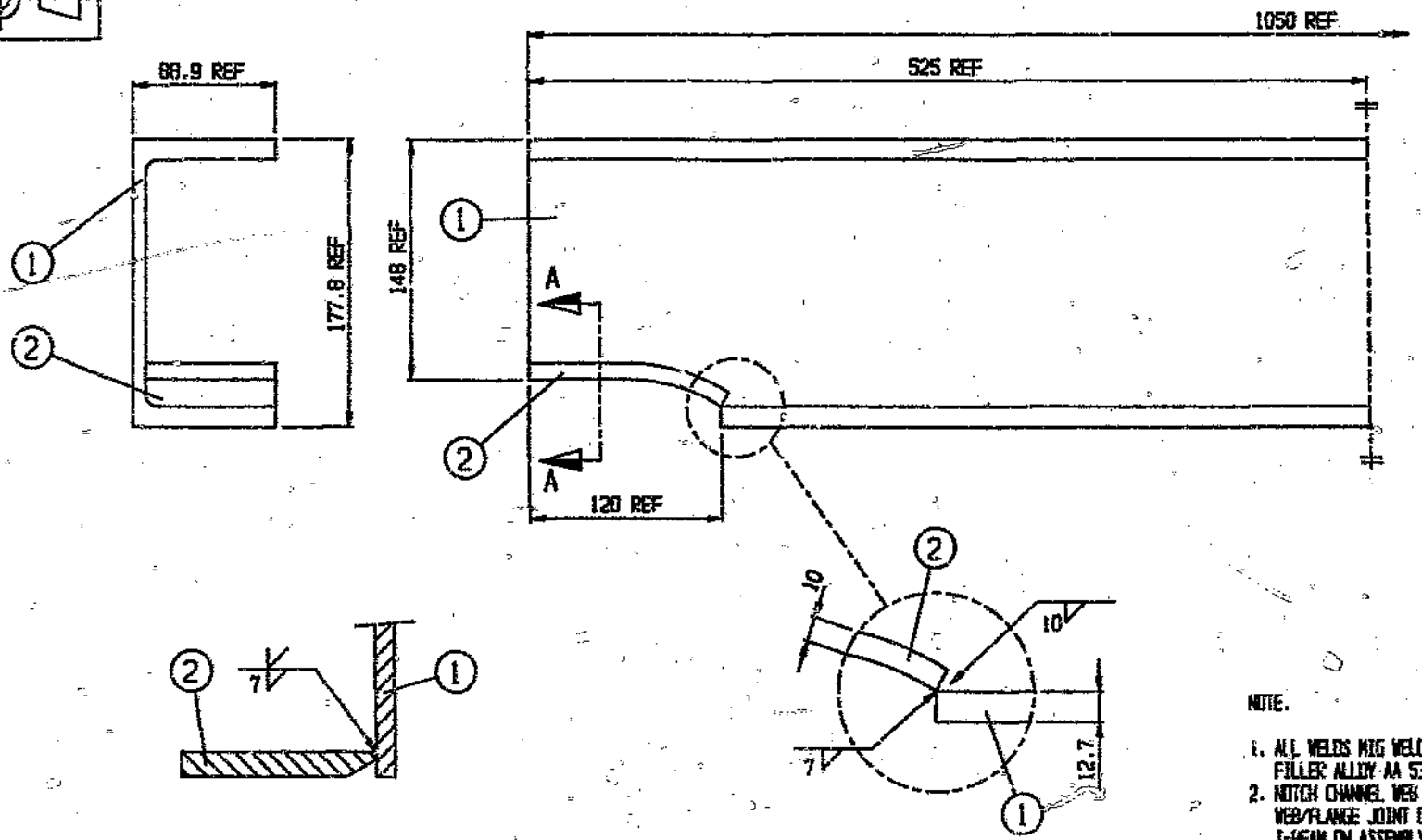

NOTE.

1. ALL WELDS MIG WELDS. FILLER ALLOY AA 5356 1.2 mm WIRE.
2. NOTCH CHANNEL WEB TO SUIT WEB/FLANGE JOINT ON MAIN I-BEAM ON ASSEMBLY.

UWtec

UNIVERSITY OF THE WITWATERSRAND

LIGHTWEIGHT ALUMINIUM SEMI-TRAILER PROJECT

ITEM	DESCRIPTION	MATERIAL	DRG. NUMBER	QTY
2	PLATE	6515 - TF ALLOY	UC-11	2
1	CHANNEL	6055 - TF ALLOY	UC-10	1

MATERIAL:	
SCALE:	1:2.5
DATE:	17-01-04
DRAWN:	M.ELSTON

TITLE: UPPER COUPLER CROSS MEMBER ASSEMBLY

DRG. No: UC-09

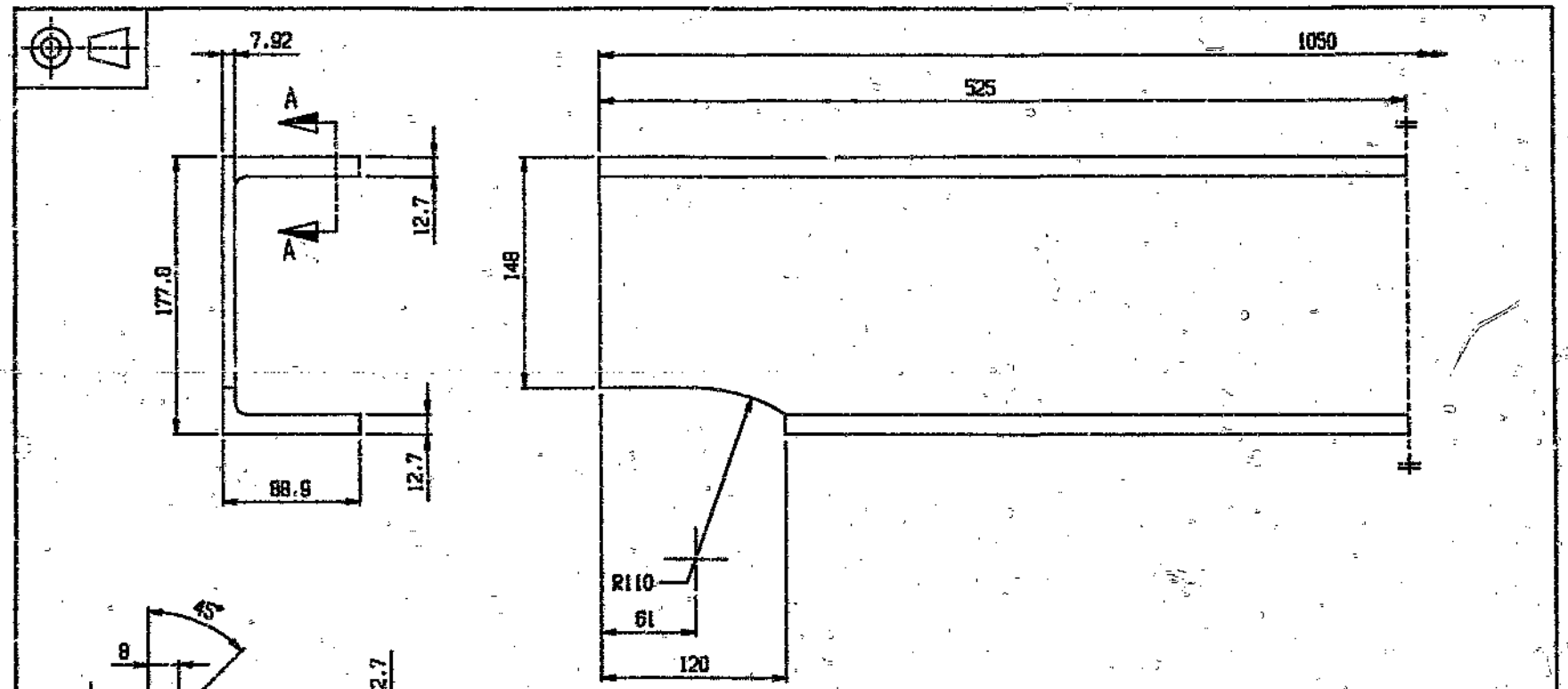

SECTION A-A
(WELD PREPARATION DETAIL)

MATERIAL: EXTRUDED ALUMINIUM I-SECTION
177.8 x 88.9 x 12.7 x 7.92 x 1050 LG
HULETTS SHAPE No. 16234
D65S - TF ALLOY

NOTE.

1. GRIND WELD PREPARATIONS USING NON-CARBORUNDUM GRINDING DISCS.

ITEM	DESCRIPTION	MATERIAL	DRG. NUMBER	QTY

UWtec

UNIVERSITY OF THE WITWATERSRAND
LIGHTWEIGHT ALUMINIUM SEMI-TRAILER PROJECT

MATERIAL:	
SCALE:	1:2.5
DATE:	18-01-84
DRAWN:	M.ELSTUN

TITLE: CHANNEL

DRG. No: UC-10

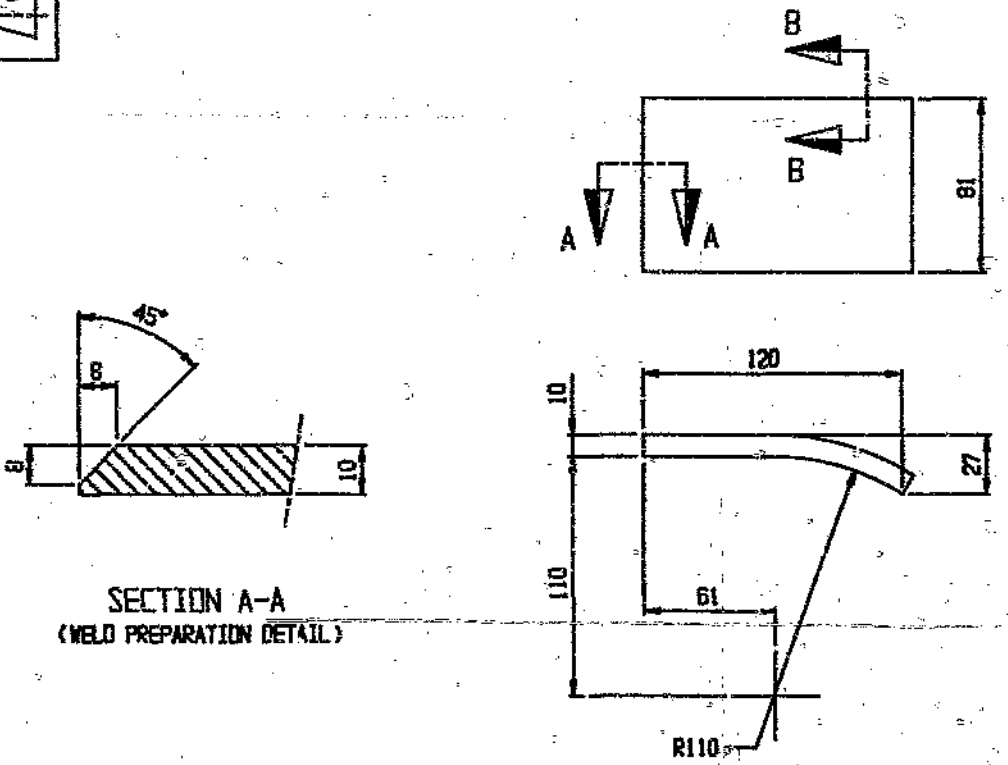

SECTION A-A
(WELD PREPARATION DETAIL)

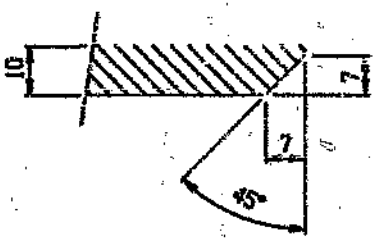

SECTION B-B
(WELD PREPARATION DETAIL)

MATERIAL: 10mm ALUMINIUM ALLOY PLATE 81 x 123
8515 - TF ALLOY

NOTE.

1. GRIND WELD PREPARATION USING NON-CARBORUNDUM GRINDING DISC.
2. LH AS SHOWN. RH OPPOSITE.

ITEM	DESCRIPTION	MATERIAL	DRG. NUMBER	QTY

UWtec	UNIVERSITY OF THE WITWATERSRAND
	LIGHTWEIGHT ALUMINIUM SEMI-TRAILER PROJECT
MATERIAL:	
SCALE:	1:2
DATE:	18-01-84
DRAWN:	M.ELSTON
TITLE:	PLATE
DRG. No:	UC-11

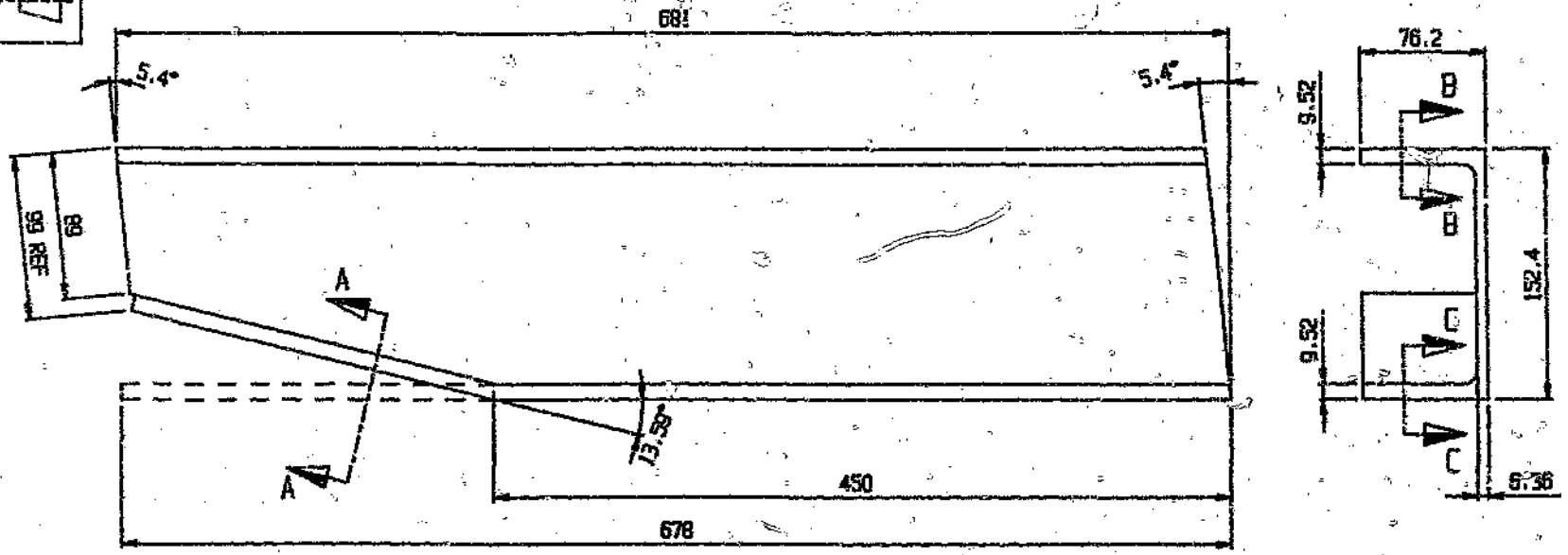

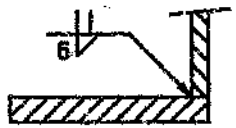

SECTION A-A

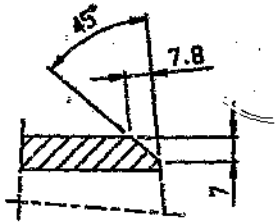

SECTION B-B
(WELD PREPARATION DETAIL)

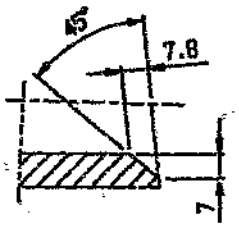

SECTION C-C
(WELD PREPARATION DETAIL)

MATERIAL: EXTRUDED ALUMINIUM CHANNEL SECTION
152.4 x 76.2 x 9.52 x 6.36 x 681 LG
HULETTS SHAPE No. 16209
6655 - TF ALLOY

NOTE.

1. SAW CUT V-SLOT IN WEB AND BEND UP AS INDICATED.
2. GRIND WELD PREPARATIONS [illegible] NON - CARBORUNDUM GRINDIN[illegible]S.
3. NOTCH CHANNEL WEB TO SUIT WEB/FLANGE JOINT ON MAIN [illegible] ON ASSEMBLY.
4. ALL WELDS MIG WELDS. FILLER ALLOY AA 5356 1.2mm WIRE.
5. LH AS SHOWN. RH OPPOSITE.

ITEM	DESCRIPTION	MATERIAL	ORG. NUMBER	QTY

UWtec

UNIVERSITY OF THE WITWATERSRAND

LIGHTWEIGHT ALUMINIUM SEMI-TRAILER PROJECT

MATERIAL:	
SCALE:	1:2.5
DATE:	20-01-84
DRAWN:	M.ELSTON

TITLE: UPPER COUPLER OUTRIGGER

DRG. No: UC-12

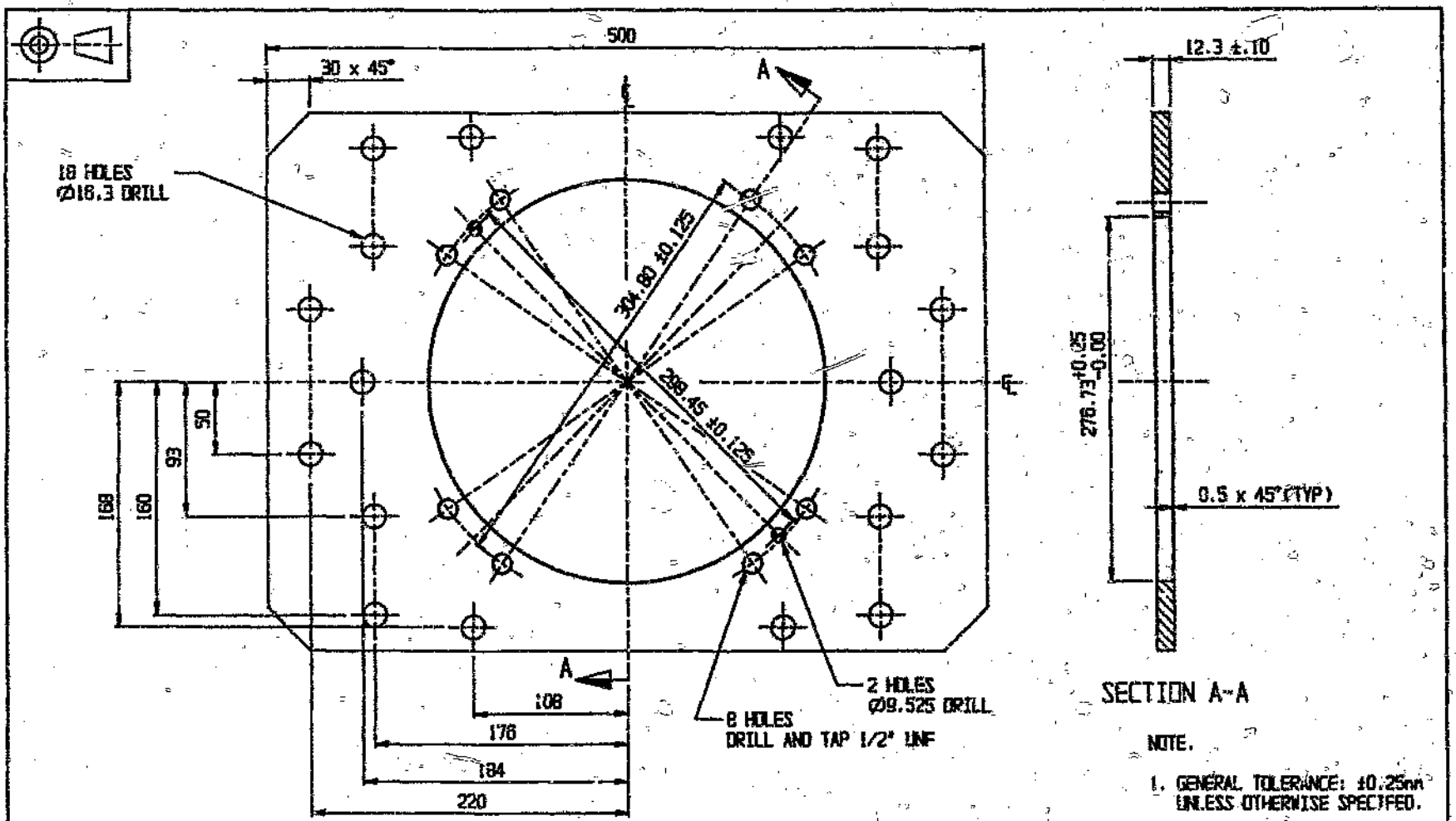

NOTE.

1. GENERAL TOLERANCE: ±0.25mm UNLESS OTHERWISE SPECIFIED.

MATERIAL: ROC TUF AD 690 STEEL PLATE

ITEM	DESCRIPTION	MATERIAL	DRG. NUMBER	QTY.

UWtec

UNIVERSITY OF THE WITWATERSRAND

LIGHTWEIGHT ALUMINIUM SEMI-TRAILER PROJECT

MATERIAL:	
SCALE:	1:2.5
DATE:	05-03-84
DRAWN:	M.ELSTON

TITLE: HUPE DEVICE FOUNDATION PLATE

DRG. No: UC-13

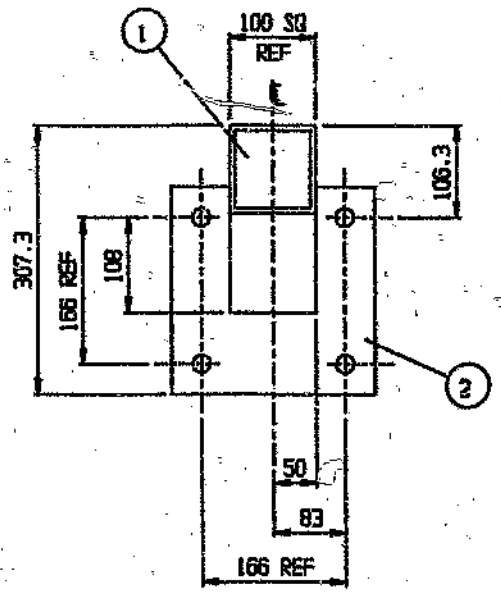

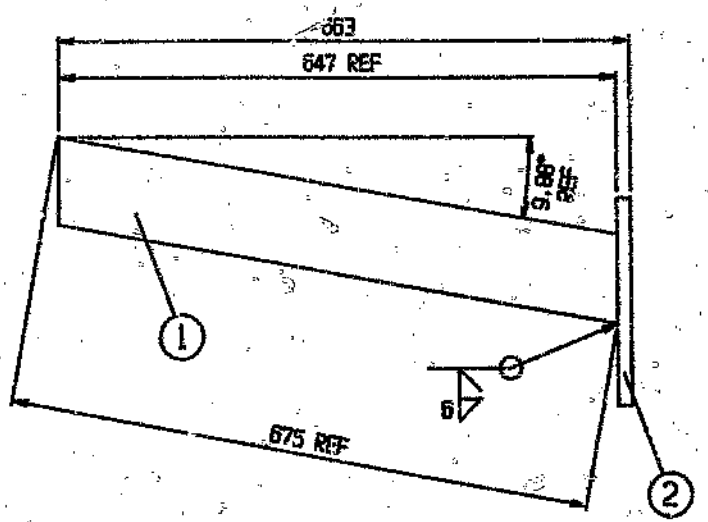

NOTE.

1. USE JIG DURING WELDING TO PREVENT DISTORTION. REFER DRG. No. JG-04.
2. PRE-HEAT ITEM 2 TO BETWEEN 100 °C AND 200 °C BEFORE WELDING.
3. ALL WELDS TO BE MIG WELDS. FILLER ALLOY AA 5356 1.2 mm WIRE.

ITEM	DESCRIPTION	MATERIAL	DRG. NUMBER	QTY
5	WASHER	M20 MS FLAT PREC. WASHER, CADMIUM PLATED	-	4
4	NUT	M20 ELEVELOC NUT (GD 8), CADMIUM PLATED	-	4
3	BOLT	M20 x 70 HEX BOLT (GD 8.8), CADMIUM PLATED	-	4
2	FLANGE PLATE	6S1S - TF ALLOY	DR-05	1
1	SQUARE TUBE	6S5S - TF ALLE	DR-06-01	1

UWtec

UNIVERSITY OF THE WITWATERSRAND

LIGHTWEIGHT ALUMINIUM SEMI-TRAILER PROJECT

MATERIAL:	
SCALE:	1:5
DATE:	7-11-83
DRAWN:	M. ELSTON

TITLE:

OUTRIGGER ASSEMBLY

(DEEP SECTION OF CHASSIS I-BEAM)

DRG. No:

DR-01

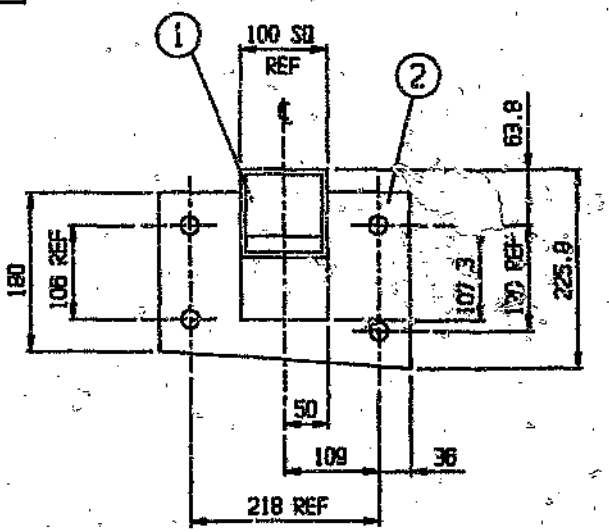

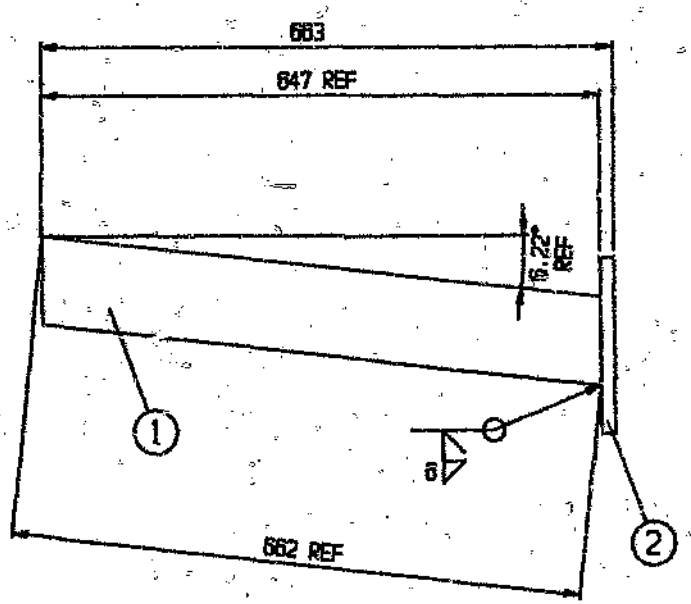

NOTE.

1. L4 AS SHOWN. RH OPPOSITE
2. USE JIG DURING WELDING TO PREVENT DISTORTION. REFER DRG. No. JG-04.
3. PRE-HEAT ITEM 2 TO BETWEEN 100 °C AND 200 °C BEFORE WELDING.
4. ALL WELDS TO BE MIG WELDS. FILLER ALLOY AA 5356 1.2 mm WIRE.

ITEM	DESCRIPTION	MATERIAL	DRG. NUMBER	QTY
5	WASHER	M20 MS FLAT PREC. WASHER, CADMIUM PLATED	-	4
4	NUT	M20 CLEVELOC NUT (GD 8), CADMIUM PLATED	-	4
3	BOLT	M20 x 70 HEX BOLT (GD 8.8), CADMIUM PLATED	-	4
2	FLANGE PLATE	6565 - TF ALLOY	DR-07	1
1	SQUARE TUBE	6065 - TF ALLOY	DR-06-02	1

UWtec

MATERIAL:	
SCALE:	1:5
DATE:	13-11-03
DRAWN:	M. ELSTON

UNIVERSITY OF THE WITWATERSRAND

LIGHTWEIGHT ALUMINIUM SEMI-TRAILER PROJECT

TITLE:

OUTRIGGER ASSEMBLY

(4° TAPERED SECTION OF CHASSIS I-BEAM)

DRG. No:

DR-02

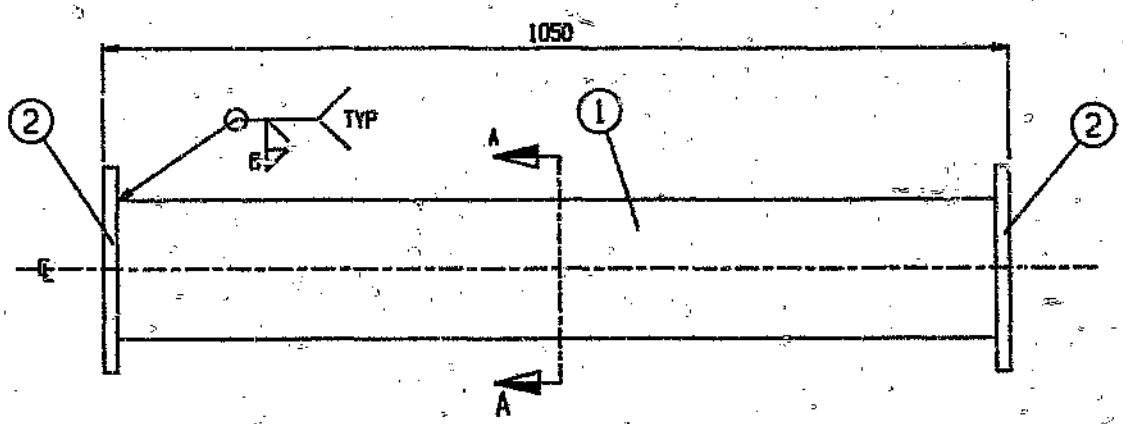

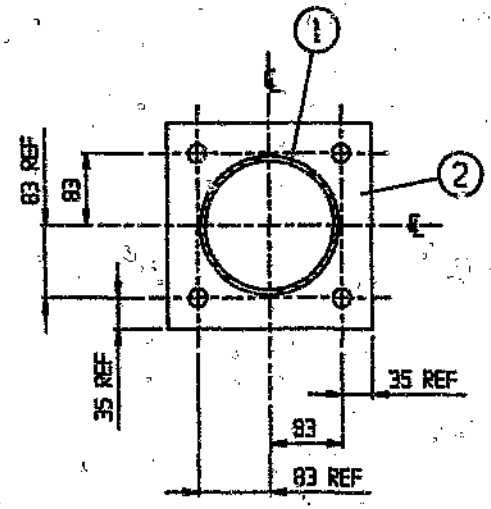

SECTION A-A

NOTE.

1. PRE-HEAT ITEMS 2 TO BETWEEN 100 °C AND 200 °C BEFORE WELDING.
2. ALL WELDS TO BE MIG WELDS. FILLER ALLOY AA 5356 1,2 dn WIRE.

ITEM	DESCRIPTION	MATERIAL	DRG. NUMBER	QTY
2	FLANGE PLATE	65S - TF ALLOY	DR-05	2
1	ROUND TUBE	65S - TF ALLOY	DR-08	1

UWtec

UNIVERSITY OF THE WITWATERSRAND
LIGHTWEIGHT ALUMINIUM SEMI-TRAILER PROJECT

MATERIAL:	
SCALE:	1:5
DATE:	7-11-83
DRAWN:	M. ELSTON

TITLE:
TORSION TUBE ASSEMBLY
(DEEP SECTION OF CHASSIS I-BEAM)

DRG. No:
DR-03

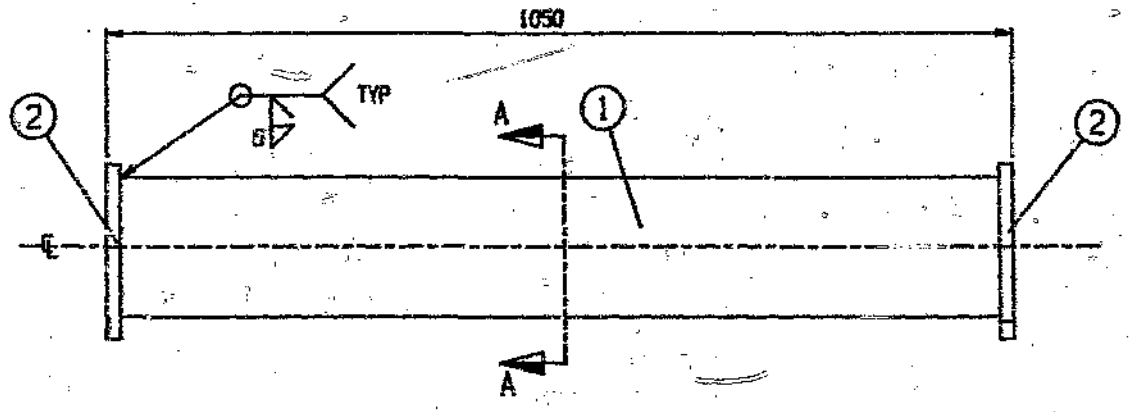

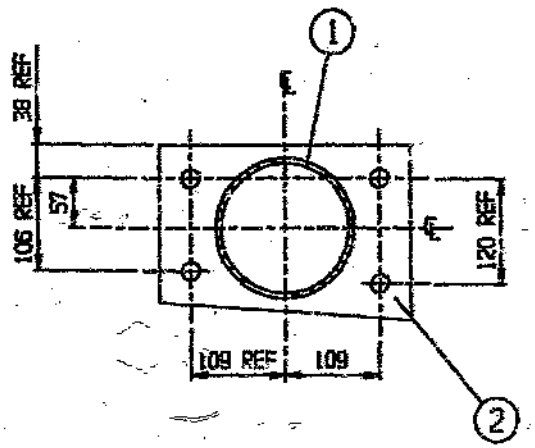

SECTION A-A

NOTE.

1. PRE-HEAT ITEMS 2 TO BETWEEN 100 °C AND 200 °C BEFORE WELDING.
2. ALL WELDS TO BE MIG WELDS. FILLER ALLOY AA 5356 1.2 mm WIRE.

ITEM	DESCRIPTION	MATERIAL	DRG. NUMBER	QTY
2	FLANGE PLATE	6061S - T6 ALLOY	DR-07	2
1	ROUND TUBE	6063S - T6 ALLOY	DR-08	1

UWtec

UNIVERSITY OF THE WITWATERSRAND

LIGHTWEIGHT ALUMINIUM SEMI-TRAILER PROJECT

MATERIAL:	
SCALE:	1:5
DATE:	8-11-03
DRAWN:	M. ELSTON

TITLE:

TORSION TUBE ASSEMBLY

(4° TAPERED SECTION OF CHASSIS I-BEAM)

DRG. No:

DR-04

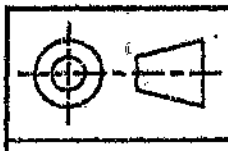

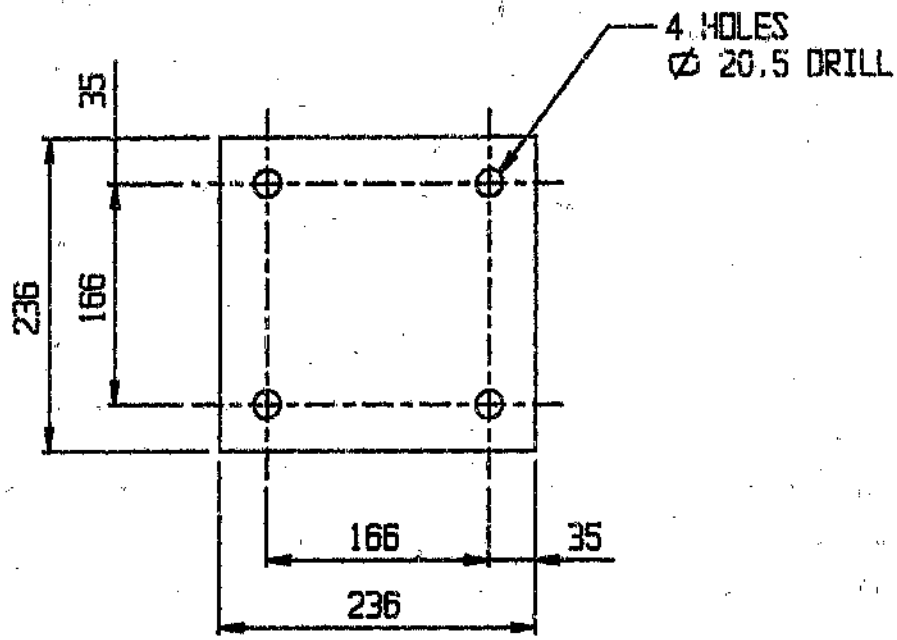

MATERIAL: 15.86 mm ALUMINIUM ALLOY PLATE 236 x 236
B51S - TF ALLOY

UWtec	UNIVERSITY OF THE WITWATERSRAND LIGHTWEIGHT ALUMINIUM SEMI-TRAILER PROJECT		
MATERIAL:		TITLE:	DRG. No:
SCALE:	1:5	FLANGE PLATE	DR-05
DATE:	08-11-83		

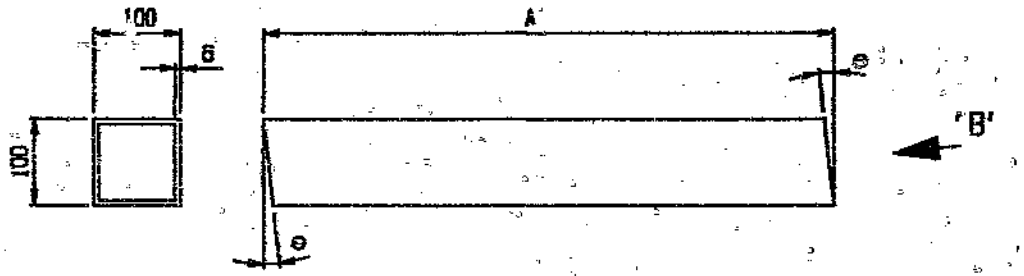

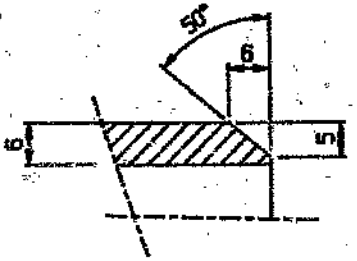

SECTION C-C
(WELD PREPARATION DETAIL)

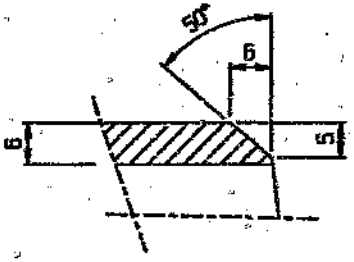

SECTION E-E
(WELD PREPARATION DETAIL)

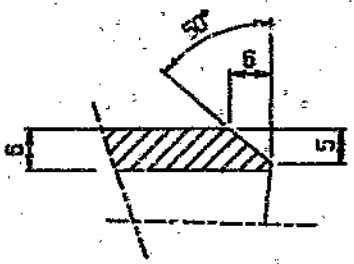

SECTION D-D
(WELD PREPARATION DETAIL)

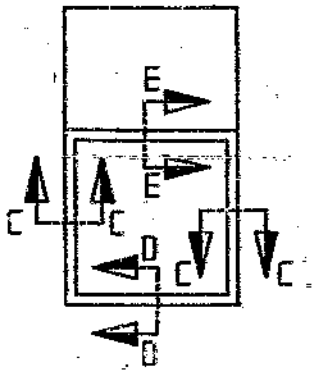

VIEW ON ARROW 'B'

MATERIAL: EXTRUDED ALUMINIUM TUBE SECTION
100 x 100 x 6 x A LG
HULETTS SHAPE No. H2027
6S5 - TF ALLOY

NOTE.

1. GRIND WELD PREPARATION USING NON-CARBORUNDUM GRINDING DISCS.

662	6.22°	DR-06-02
675	9.86°	DR-06-01
A	θ	OPTION No.

ITEM	DESCRIPTION	MATERIAL	DRG. NUMBER	QTY

UWtec

UNIVERSITY OF THE WITWATERSRAND
LIGHTWEIGHT ALUMINIUM SEMI-TRAILER PROJECT

MATERIAL:	
SCALE:	1:5
DATE:	8-11-93
DRAWN:	M. ELSTON

TITLE: SQUARE TUBE

DRG. No: DR-06

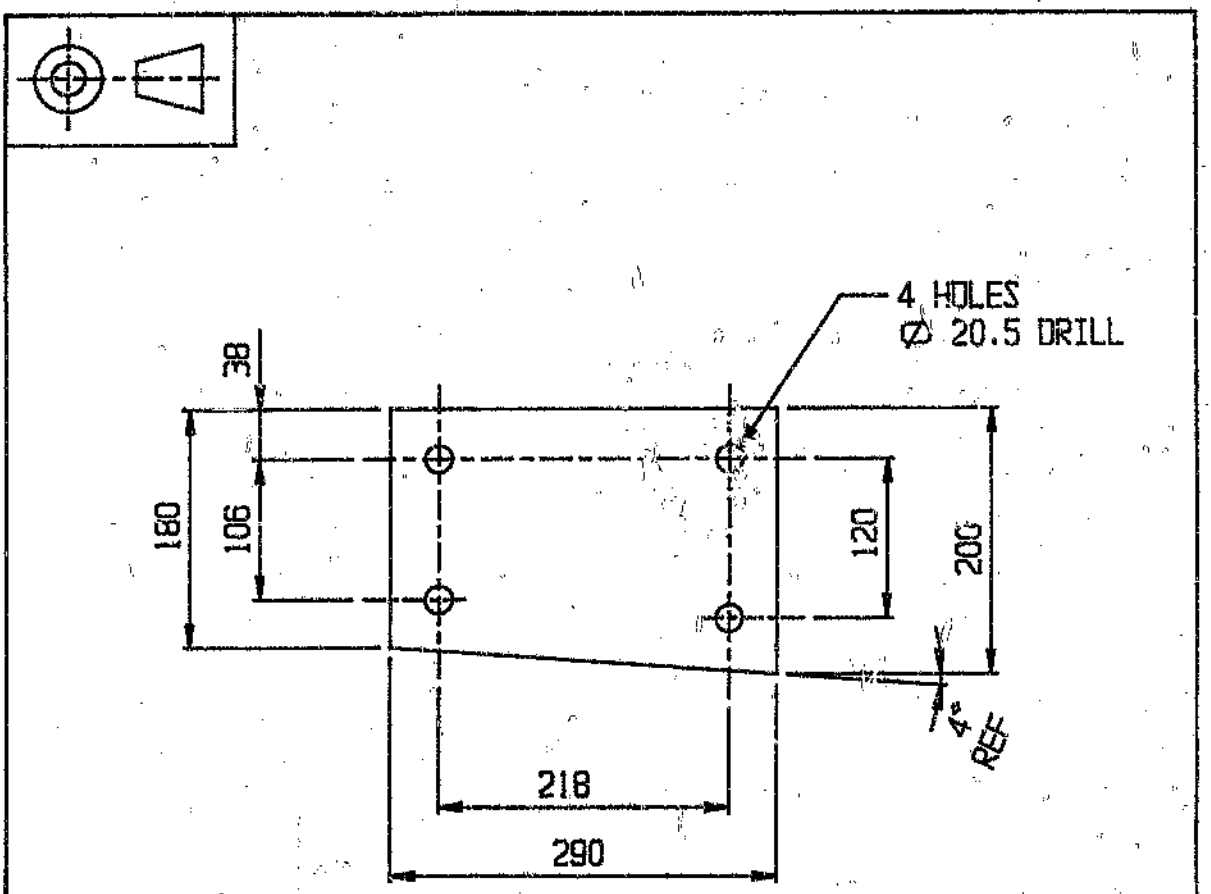

MATERIAL: 15.88 mm ALUMINIUM ALLOY PLATE 290 x 200
B51S - TF ALLOY

UWtec	UNIVERSITY OF THE WITWATERSRAND		
	LIGHTWEIGHT ALUMINIUM SEMI-TRAILER PROJECT		
MATERIAL:		TITLE:	DRG. No:
SCALE:	1:5	FLANGE PLATE	DR-07
DATE:	14-11-83		
DRAWN:	M. ELSTON		

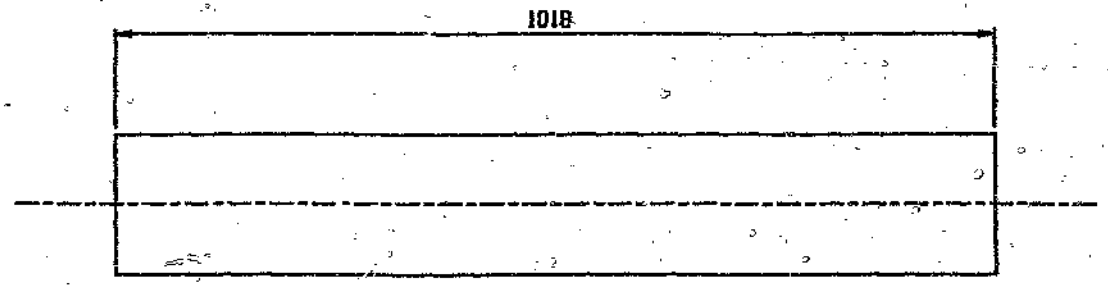

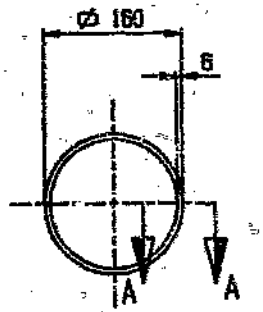

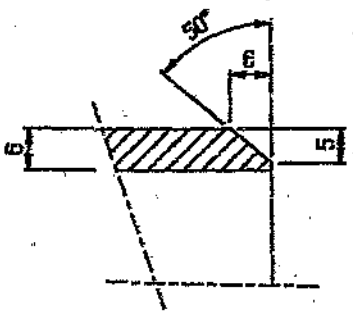

SECTION A-A
(WELD PREPARATION DETAIL)

MATERIAL: EXTRUDED ALUMINIUM TUBE SECTION
160 OD x 6 WALL x 1018 LG
HULETTS 160 x 6 ROUND TUBE
D6S - TF ALLOY

NOTE.

1. GRIND WELD PREPARATION USING NON-CARBORUNDUM GRINDING DISCS.
2. ENSURE ENDS OF TUBE ARE ACCURATLY CUT SQUARE.

ITEM	DESCRIPTION	MATERIAL	DRG. NUMBER	QTY

UWtec

UNIVERSITY OF THE WITWATERSRAND
LIGHTWEIGHT ALUMINIUM SEMI-TRAILER PROJECT

MATERIAL:	
SCALE:	1:5
DATE:	8-11-83
DRAWN:	M. ELSTON

TITLE: ROUND TUBE

DRG. No: DR-08

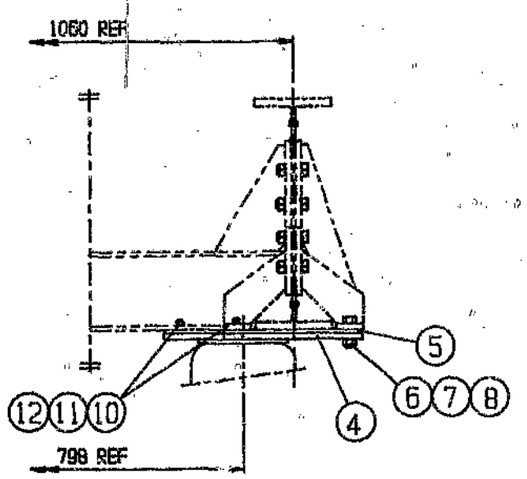

SECTION D-D

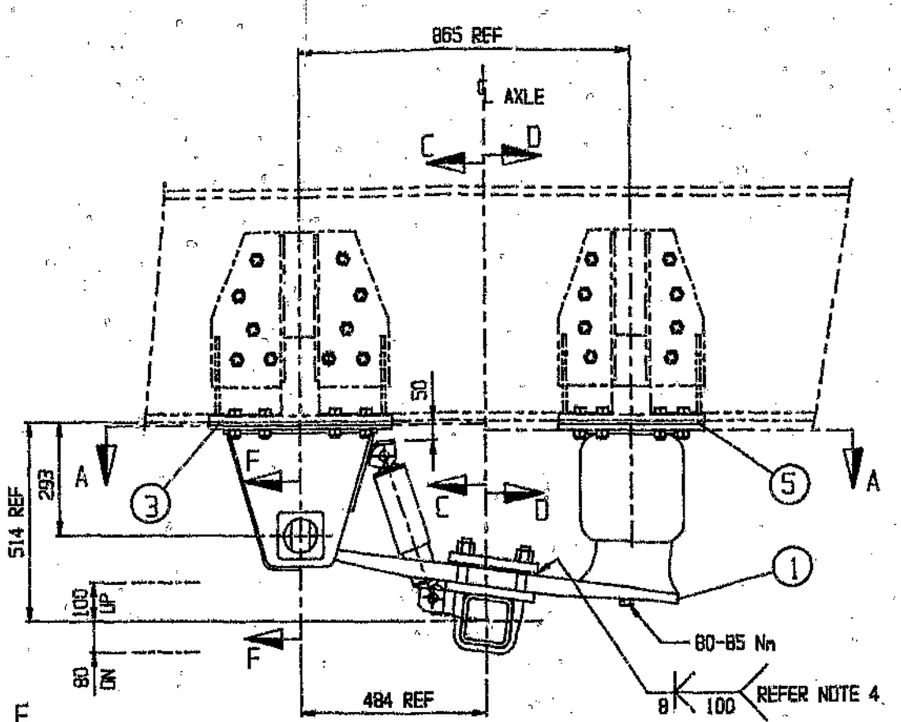

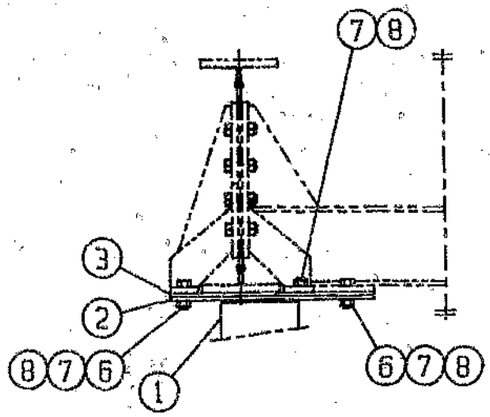

SECTION C-C

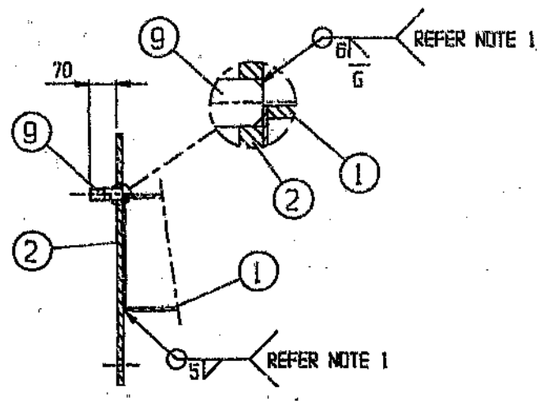

SECTION B-B
(SCALE 1:7.5)

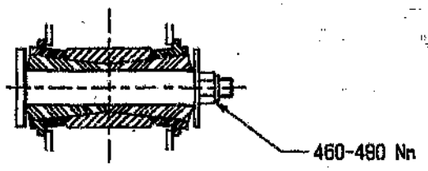

SECTION F-F
(SCALE 1:5)

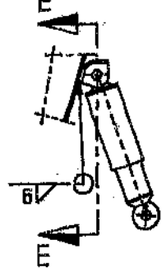

WELD DETAIL OF SHOCK ABSORBER

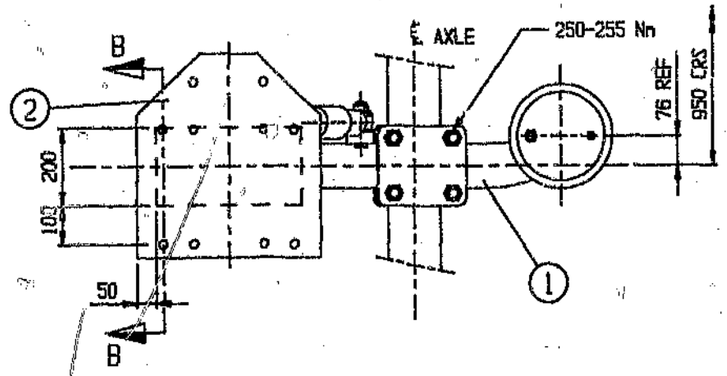

SECTION A-A

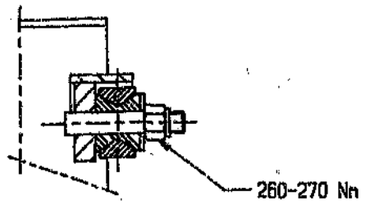

SECTION E-E
(SCALE 1:2.5)

ITEM	DESCRIPTION	MATERIAL	DRG/PART NUMBER	QTY
12	WASHER	M12 HS FLAT PREC. WASHER (GD 8), CADMIUM PLATED	-	8
11	NUT	M12 CLEVELOC NUT (GD 8), CADMIUM PLATED	-	8
10	CSK CAP SCREW	M12 x 70 CSK CAP SCREW (GD 8.8), CADMIUM PLATED	-	8
9	STUD	CUT FROM M20 x 70 HEX BOLT (GD 8.8), CADMIUM PLATED	-	6
8	WASHER	M20 HS FLAT PREC. WASHER (GD 8), CADMIUM PLATED	-	28
7	NUT	M20 CLEVELOC NUT (GD 8), CADMIUM PLATED	-	28
6	BOLT	M20 x 70 HEX BOLT (GD 8.8), CADMIUM PLATED	-	20
5	AIR BAG RUBBER GASKET	-	SS-27	2
4	AIR BAG MOUNTING PLATE	-	SS-25	2
3	SUSPENSION HANGER RUBBER GASKET	-	SS-26	2
2	SUSPENSION HANGER MOUNTING PLATE	BS 4360 GD 43A STEEL	SS-24	2
1	MODIFIED FRUEHAUF 'T' AIR SUSPENSION ASSEMBLY	-	HEMMED FRUEHAUF PART. 04-06-8237	1

NOTE.

1. WELD ITEMS 9 TO ITEM 2 BEFORE WELDING ITEM 2 TO SUSPENSION HANGER AND BEFORE ASSEMBLY OF HANGER ONTO CHASSIS.
2. PAINT UPPER SURFACE OF ITEM 2 WITH TWO COATS OF ZINC CHROMATE PRIMER BEFORE ASSEMBLY.
3. DIP THE TRAILING ARM RUBBER CONE BUSHINGS IN A SOLUTION OF 50 PERCENT LIQUID SOAP AND 50 PERCENT WATER BEFORE ASSEMBLY.
4. WELD THE AXLE CLAMP PLATES AS INDICATED AFTER THE WHEEL ALLIGNMENT IS COMPLETED AND BEFORE FITTING THE SHOCK ABSORBER. PROTECT TRAILING ARM FROM WELD SPLATTER.
5. REFER TABLE E3 IN APPENDIX E FOR BOLT TORQUES NOT SPECIFIED ON THIS DRAWING.

UWtec

UNIVERSITY OF THE WITWATERSRAND

LIGHTWEIGHT ALUMINIUM SEMI-TRAILER PROJECT

MATERIAL:	
SCALE:	1:10
DATE:	26-09-83
DRAWN:	M.ELSTON

TITLE: SUSPENSION MOUNTING ASSEMBLY

DRG. No: SS-01

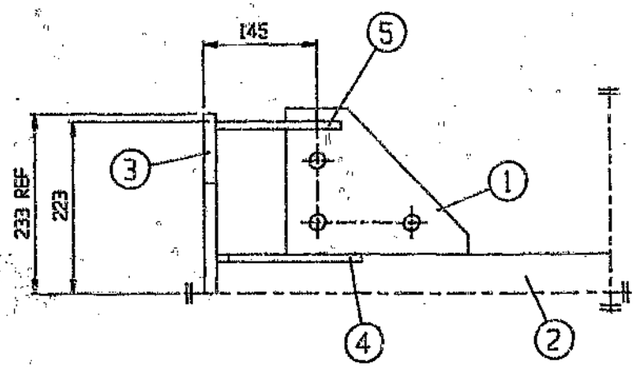

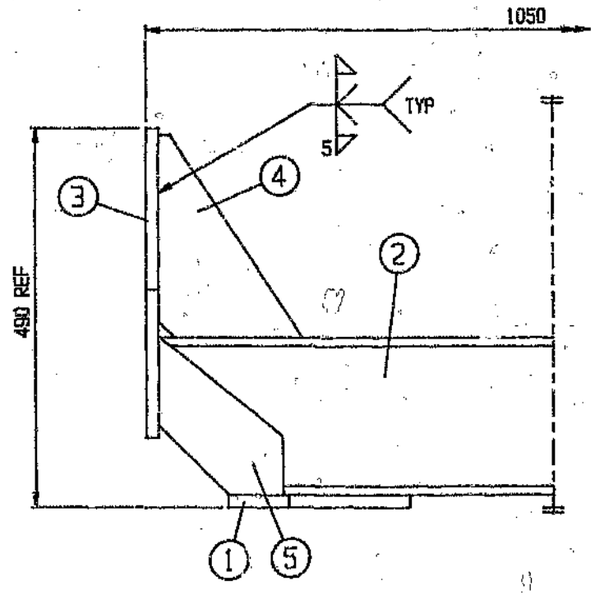

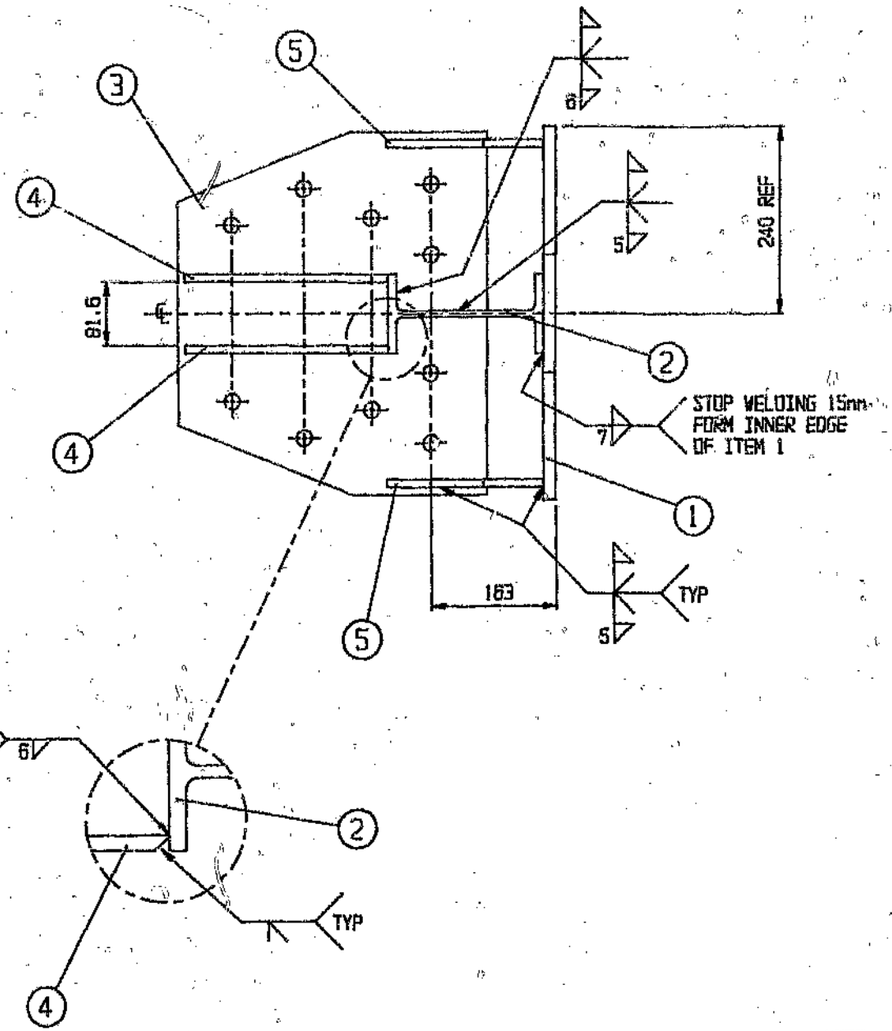

ITEM	DESCRIPTION	MATERIAL	DRG. NUMBER	QTY
8	WASHER	M20 MS FLAT PREC. WASHER, CADMIUM PLATED	-	10
7	NUT	M20 CLEVELOC NUT (GD 8), CADMIUM PLATED	-	10
6	BOLT	M20 x 70 HEX BOLT (GD 8.8), CADMIUM PLATED	-	10
5	GUSSET PLATE	6S1S - TF ALLOY	SS-14	4
4	GUSSET PLATE	6S1S - TF ALLOY	SS-12	2 LH 2 RH
3	PLATE	6S1S - TF ALLOY	SS-08	2
2	CROSS-MEMBER	065S - TF ALLOY	SS-06	1
1	PLATE	6S1S - TF ALLOY	SS-10	2

NOTE.

1. USE JIG DURING WELDING TO PREVENT DISTORTION. REFER DRG. No. JG-02.
2. PRE-HEAT ALL COMPONENTS TO BETWEEN 100° AND 200° C BEFORE WELDING.
3. ALL WELDS TO BE MIG WELDS. FILLER ALLOY AA 5356 1.2 mm WIRE.

UWtec

UNIVERSITY OF THE WITWATERSRAND

LIGHTWEIGHT ALUMINIUM SEMI-TRAILER PROJECT

MATERIAL:	
SCALE:	1:5
DATE:	2-10-83
DRAWN:	M. ELSTON

TITLE: SUSPENSION HANGER CROSS-MEMBER ASSEMBLY

DRG. No: SS-02

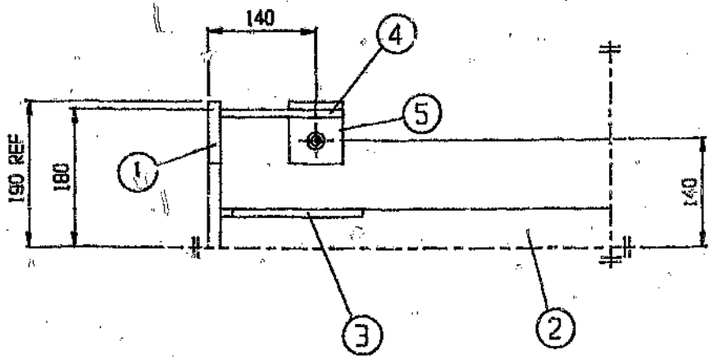

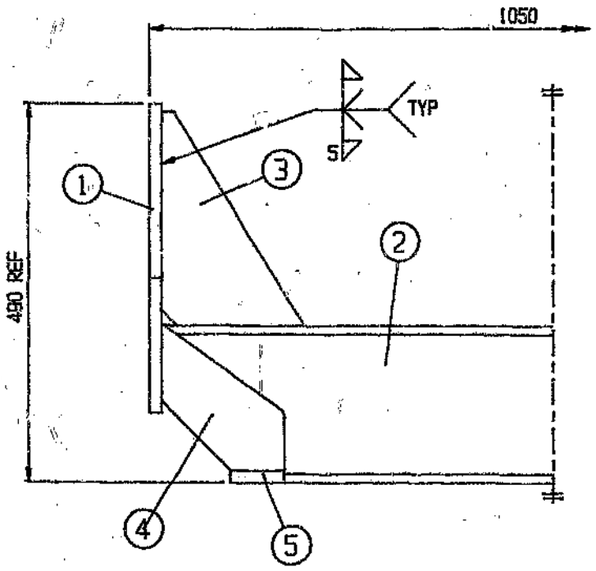

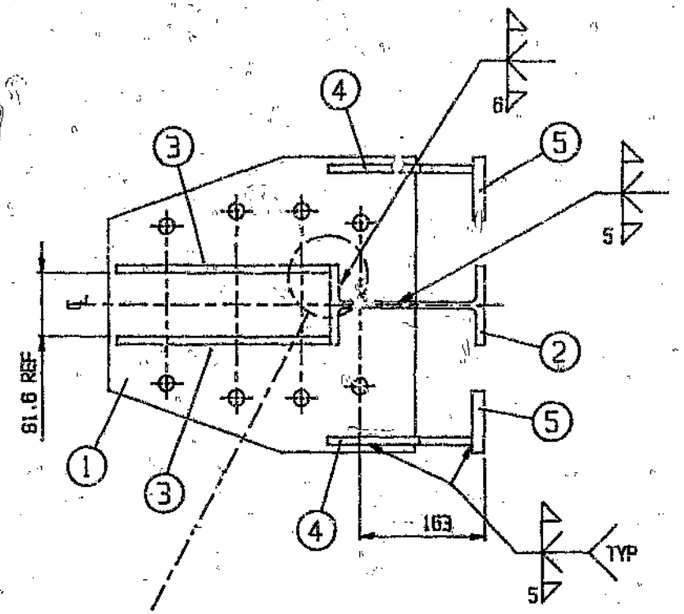

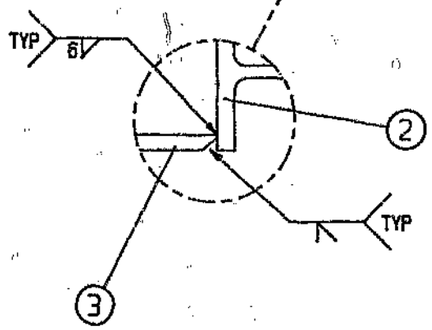

ITEM	DESCRIPTION	MATERIAL	DRG. NUMBER	QTY
8	WASHER	M20 MS FLAT PREC. WASHER, CADMIUM PLATED	-	8
7	NUT	M20 CLEVELOC NUT (GD 8), CADMIUM PLATED	-	8
6	BOLT	M20 x 70 HEX BOLT (GD 8.8), CADMIUM PLATED	-	8
5	PLATE	6S1S - TF ALLOY	SS-11	4
4	GUSSET PLATE	6S1S - TF ALLOY	SS-15	4
3	GUSSET PLATE	6S1S - TF ALLOY	SS-13	2 LH 2 RH
2	CROSS-MEMBER	6S5 - TF ALLOY	SS-07	1
1	PLATE	6S1S - TF ALLOY	SS-09	2

NOTE.

1. USE JIG DURING WELDING TO PREVENT DISTORTION. REFER DRG. No. JG-03.
2. PRE-HEAT ALL COMPONENTS TO BETWEEN 100° AND 200° C BEFORE WELDING.
3. ALL WELDS TO BE MIG WELDS. FILLER ALLOY AA 5356 1.2 mm WIRE.

UWtec

UNIVERSITY OF THE WITWATERSRAND

LIGHTWEIGHT ALUMINIUM SEMI-TRAILER PROJECT

MATERIAL:	-
SCALE:	1:5
DATE:	28-12-83
DRAWN:	M. ELSTEIN

TITLE: SUSPENSION AIR BAG CROSS-MEMBER ASSEMBLY

DRG. No: SS-03

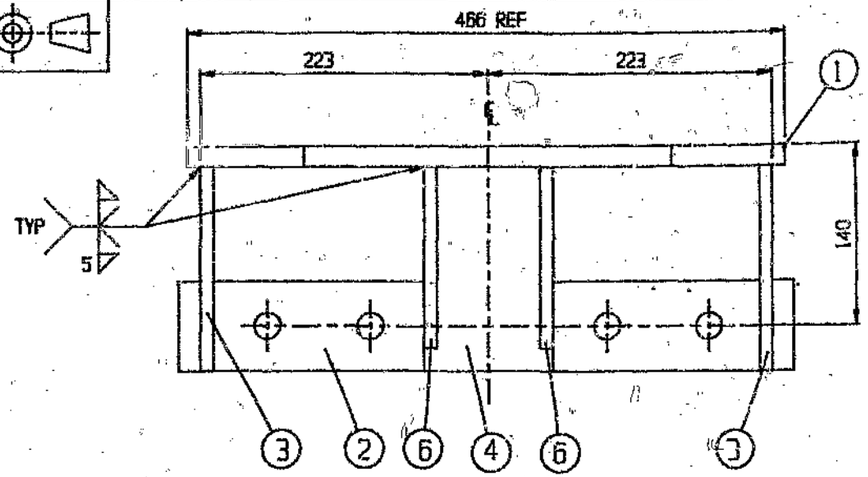

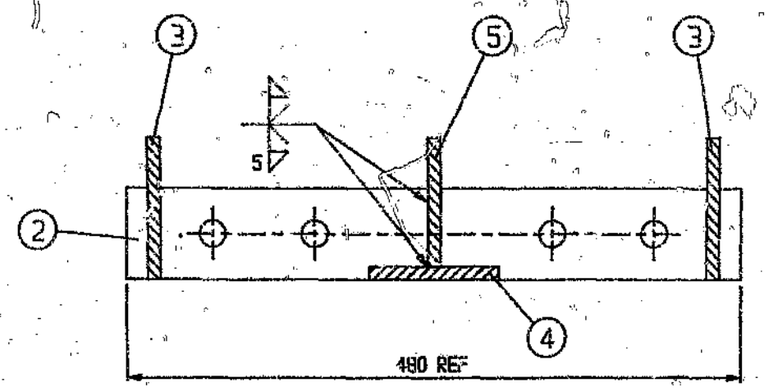

SECTION A-A

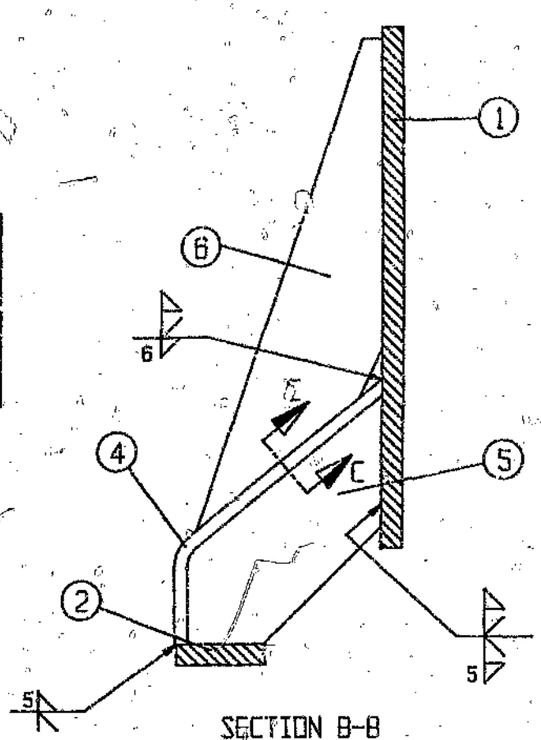

SECTION B-B

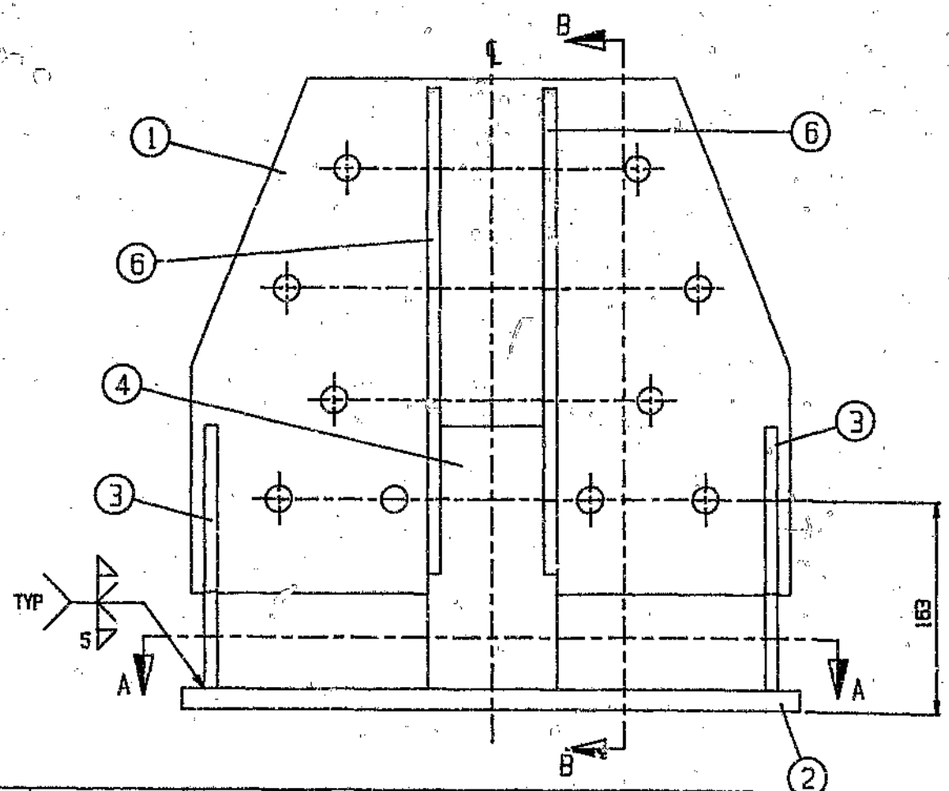

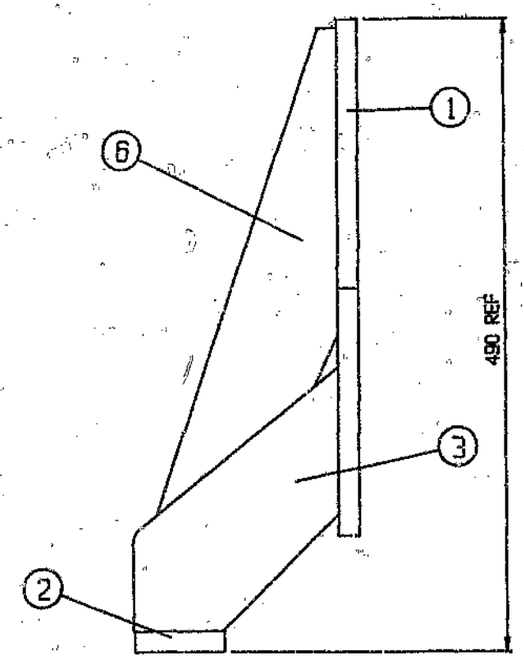

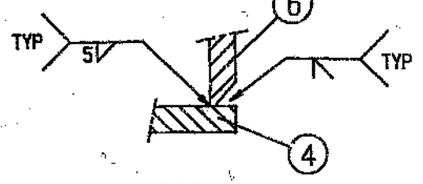

SECTION C-C

NOTE.

1. USE JIG DURING WELDING TO PREVENT DISTORTION. REFER DRG. No. JG-02.
2. PRE-HEAT ALL COMPONENTS TO BETWEEN 100° AND 200° C BEFORE WELDING.
3. COMPLETE WELDING OF ITEM 5 TO ITEM 4 BEFORE ASSEMBLY ONTO ITEMS 1 AND 2.
4. ALL WELDS TO BE MIG WELDS. FILLER ALLOY AA 5356 1.2mm WIRE.

ITEM	DESCRIPTION	MATERIAL	DRG. NUMBER	QTY
6	GUSSET PLATE	6151S - T6 ALLOY	SS-16	1 LH 1 RH
5	T-GUSSET WEB	6151S - T6 ALLOY	SS-22	1
4	T-GUSSET FLANGE	6151S - T6 ALLOY	SS-20	1
3	GUSSET PLATE	6151S - T6 ALLOY	SS-14	2
2	PLATE	6151S - T6 ALLOY	SS-18	1
1	PLATE	6151S - T6 ALLOY	SS-08	1

UWtec

UNIVERSITY OF THE WITWATERSRAND

LIGHTWEIGHT ALUMINIUM SEMI-TRAILER PROJECT

MATERIAL:	
SCALE:	1:3
DATE:	29-11-03
DRAWN:	M.ELSTON

TITLE: SUSPENSION HANGER OUTER BRACKET ASSEMBLY

DRG. No: SS-04

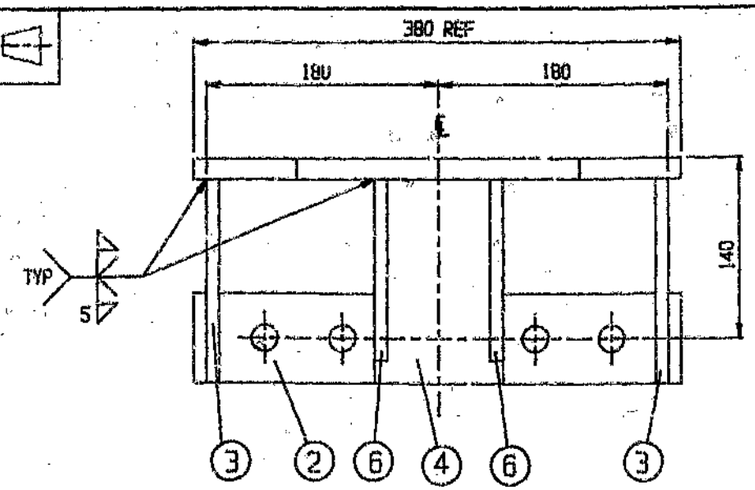

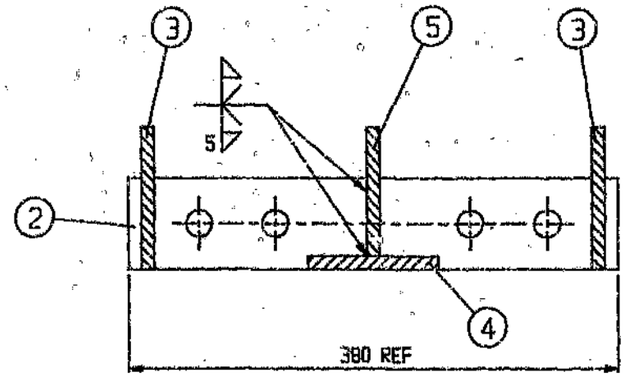

SECTION A-A

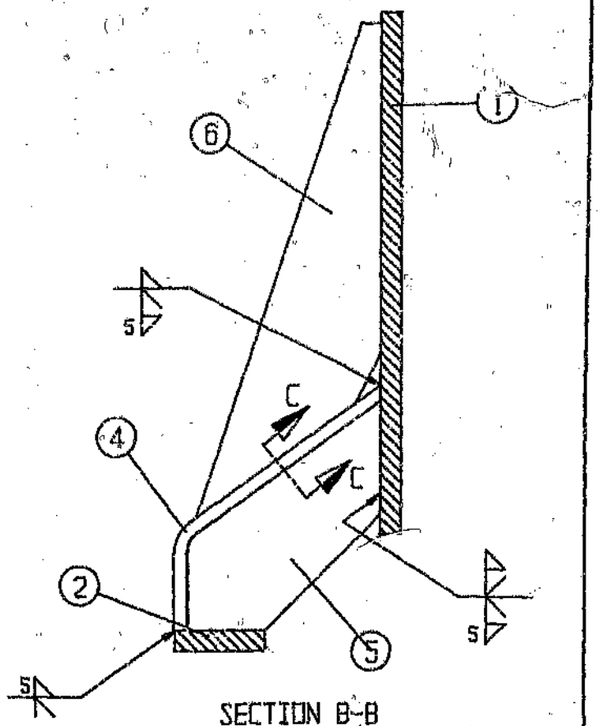

SECTION B-B

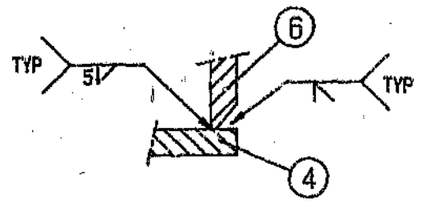

SECTION C-C

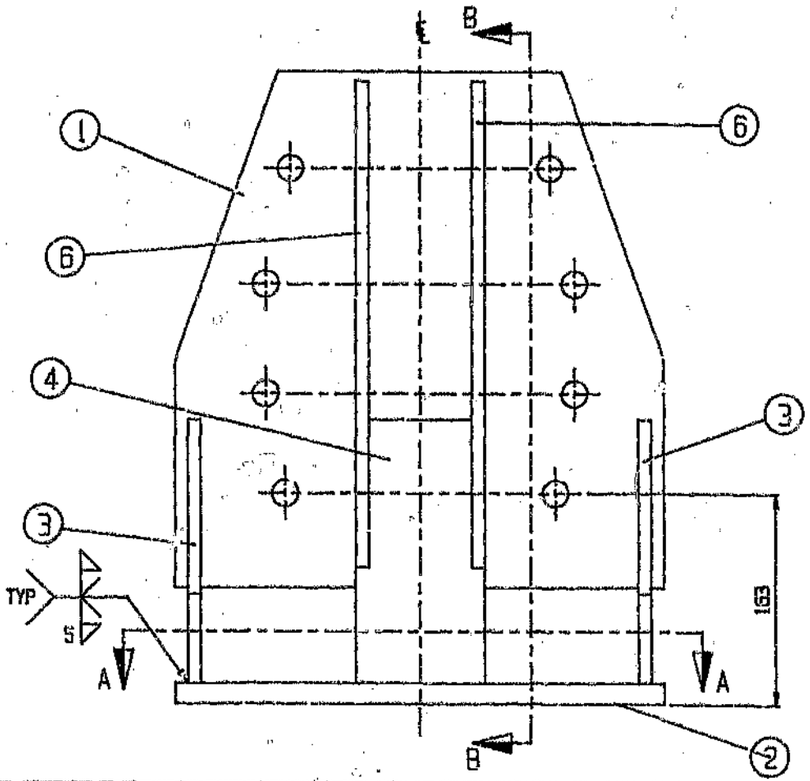

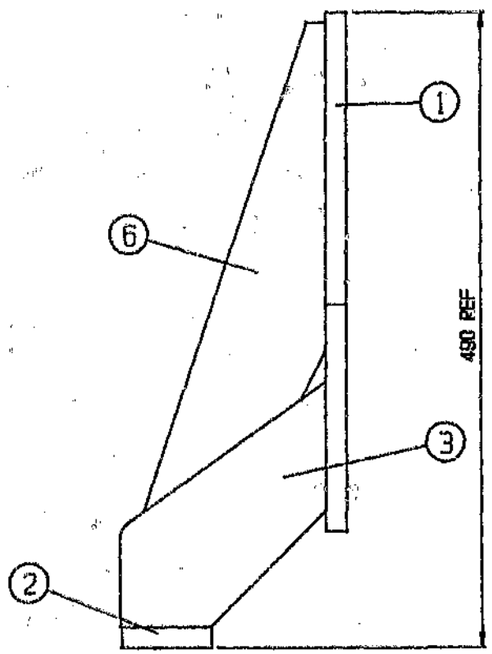

ITEM	DESCRIPTION	MATERIAL	DRG. NUMBER	QTY
6	GUSSET PLATE	951S - TF ALLOY	SS-17	1 LH 1 RH
5	T-GUSSET WEB	951S - TF ALLOY	SS-12	1
4	T-GUSSET FLANGE	951S - TF ALLOY	SS-21	1
3	GUSSET PLATE	951S - TF ALLOY	SS-15	2
2	PLATE	951S - TF ALLOY	SS-19	1
1	PLATE	951S - TF ALLOY	SS-09	1

NOTE.

1. USE JIG DURING WELDING TO PREVENT DISTORTION. REFER DRG. No. JG-03.
2. PRE-HEAT ALL COMPONENTS TO BETWEEN 100° AND 200° C BEFORE WELDING.
3. COMPLETE WELDING OF ITEM 5 TO ITEM 4 BEFORE ASSEMBLY ONTO ITEMS 1 AND 2.
4. ALL WELDS TO BE MIG WELDS. FILLER ALLOY AA 5356 1.2mm WIRE.

UWtec

UNIVERSITY OF THE WITWATERSRAND

LIGHTWEIGHT ALUMINIUM SEMI-TRAILER PROJECT

MATERIAL:	
SCALE:	1:3
DATE:	28-11-83
DRAWN:	M.ELSTON

TITLE:

SUSPENSION AIR BAG OUTER BRACKET ASSEMBLY

DRG. No:

SS-05

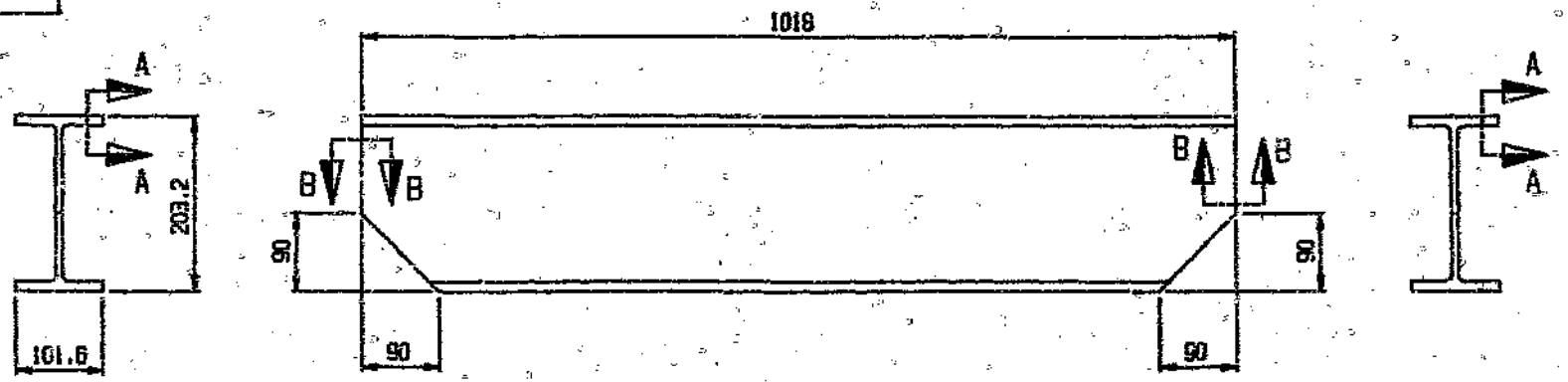

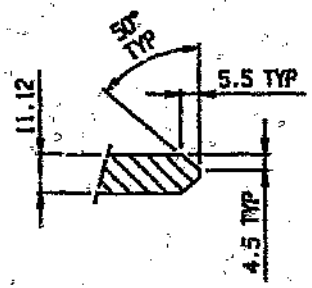

SECTION A-A
(WELD PREPARATION DETAIL)

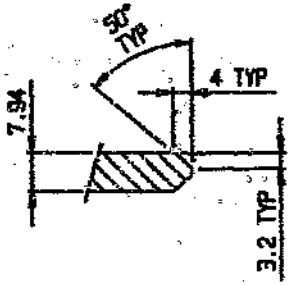

SECTION B-B
(WELD PREPARATION DETAIL)

NOTE.

1. GRIND WELD PREPARATIONS USING NON-CARBORUNDUM GRINDING DISCS.

MATERIAL: EXTRUDED ALUMINIUM I-SECTION
203.2 x 101.6 x 11.12 x 7.94 x 1318 LG.
HULETTS SHAPE No. 17091
6063 - T6 ALLOY.

ITEM	DESCRIPTION	MATERIAL	DRG. NUMBER	QTY

UWtec

UNIVERSITY OF THE WITWATERSRAND
LIGHTWEIGHT ALUMINIUM SEMI-TRAILER PROJECT

MATERIAL:	
SCALE:	1:5
DATE:	28-12-93
DRAWN:	M.ELSTON

TITLE: CROSS-MEMBER

DRG. No: SS-06

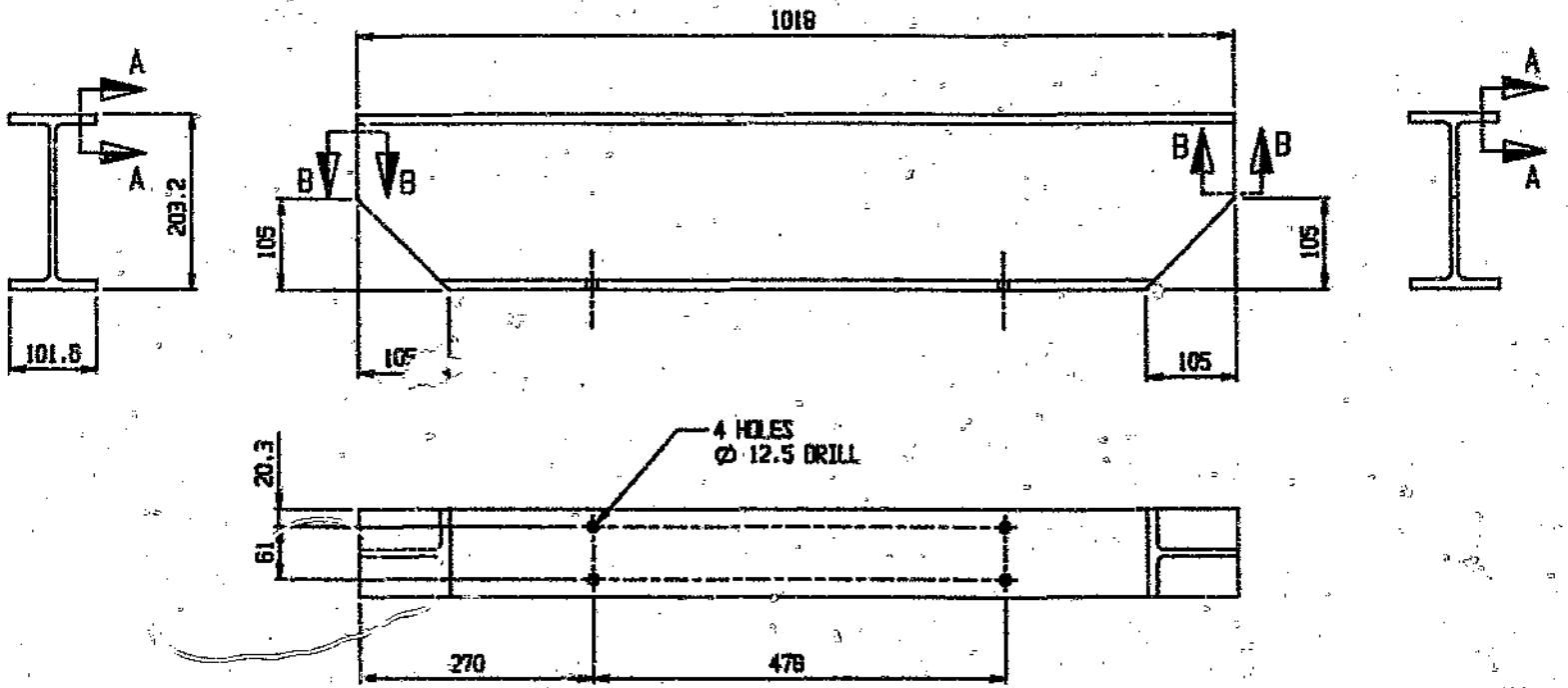

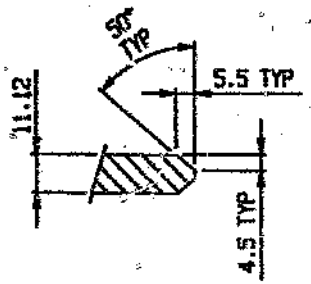

SECTION A-A
(WELD PREPARATION DETAIL)

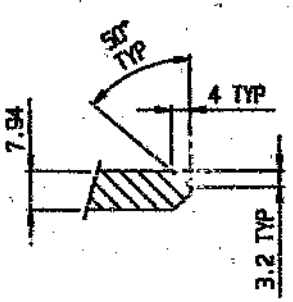

SECTION B-B
(WELD PREPARATION DETAIL)

MATERIAL: EXTRUDED ALUMINIUM I-SECTION
203.2 x 101.6 x 11.12 x 7.94 x 1018 LG.
HULETTS SHAPE No. 17091
D6SS - TF ALLOY

NOTE.

1. GRIND WELD PREPARATIONS USING NON-CARBORUNDUM GRINDING DISCS.

ITEM	DESCRIPTION	MATERIAL	DRG. NUMBER	QTY

UWtec

UNIVERSITY OF THE WITWATERSRAND

LIGHTWEIGHT ALUMINIUM SEMI-TRAILER PROJECT

MATERIAL:	
SCALE:	1:5
DATE:	28-12-93
DRAWN:	M.ELSTON

TITLE: CROSS-MEMBER

DRG. No: SS-07

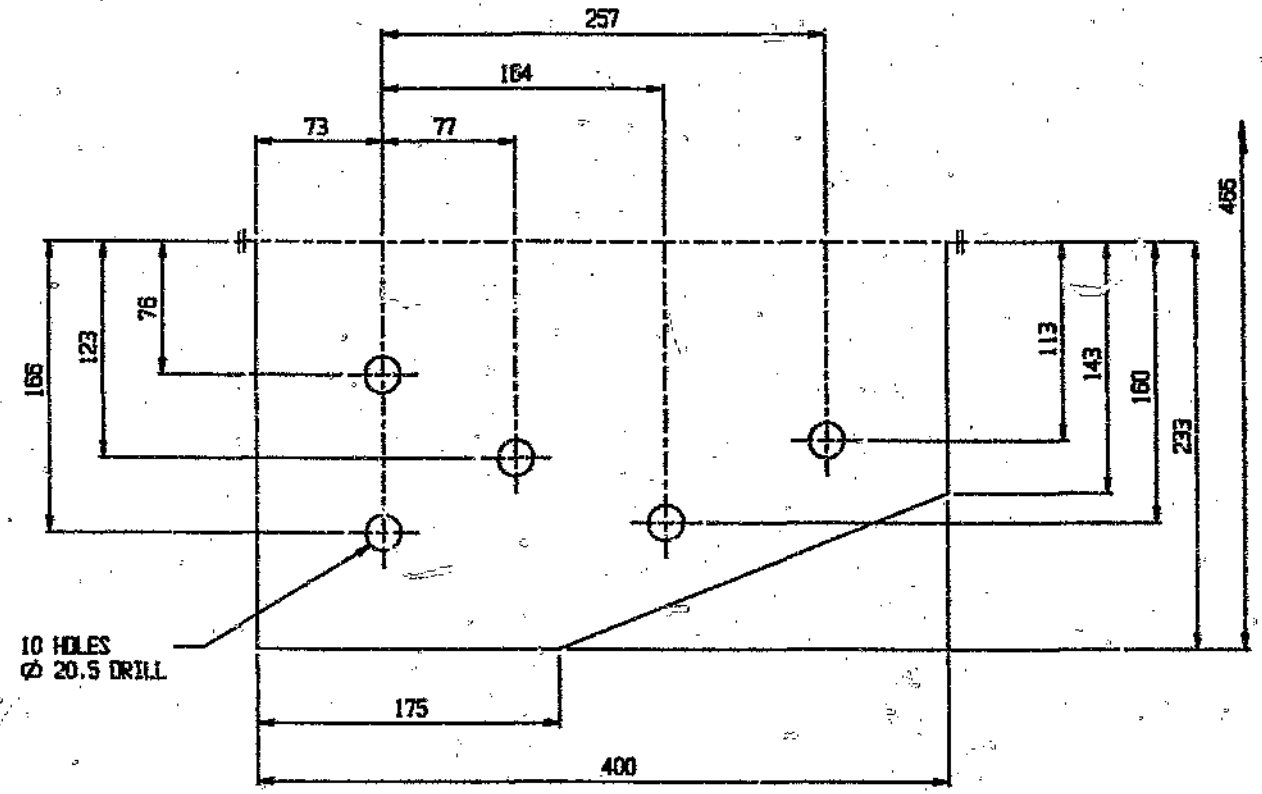

MATERIAL: 15.88 mm ALUMINIUM ALLOY PLATE 400 x 466
BSiS - TF ALLOY.

ITEM	DESCRIPTION	MATERIAL	DRG. NUMBER	QTY

UWtec

UNIVERSITY OF THE WITWATERSRAND

LIGHTWEIGHT ALUMINIUM SEMI-TRAILER PROJECT

MATERIAL:	
SCALE:	1:2.5
DATE:	3-11-83
DRAWN:	M.B.STON

TITLE: PLATE

DRG. No: SS-08

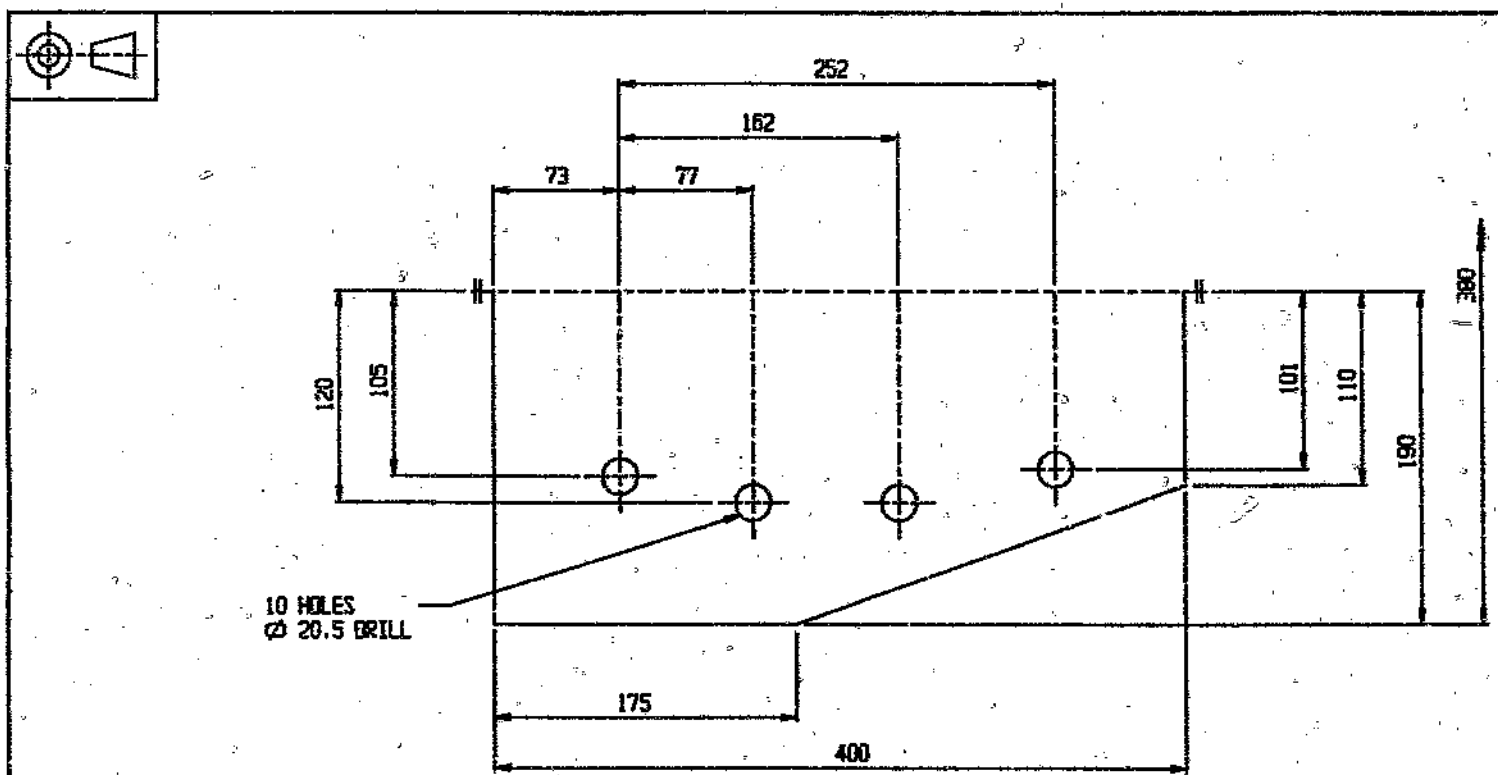

MATERIAL: 15.88 mm ALUMINIUM ALLOY PLATE 400 x 380
BS1S - TF ALLOY

ITEM	DESCRIPTION	MATERIAL	DRG. NUMBER	QTY

UWtec

UNIVERSITY OF THE WITWATERSRAND
LIGHTWEIGHT ALUMINIUM SEMI-TRAILER PROJECT

MATERIAL:	
SCALE:	1:2.5
DATE:	29-12-03
DRAWN:	M.ELSTON

TITLE: PLATE

DRG. No: SS-09

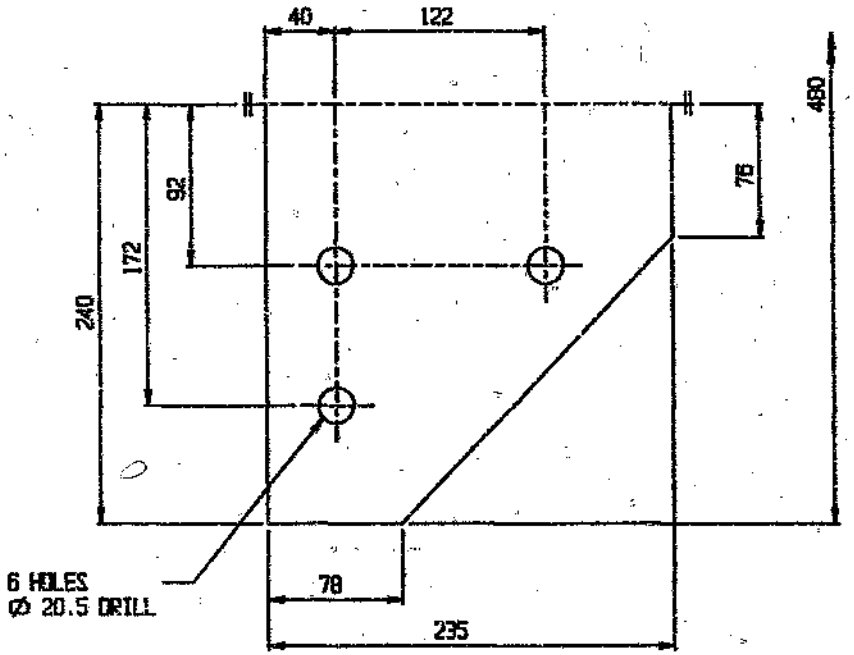

MATERIAL: 15.88 mm ALUMINIUM ALLOY 235 x 480
6151S – TF ALLOY.

ITEM	DESCRIPTION	MATERIAL	DRG. NUMBER	QTY

UWtec

UNIVERSITY OF THE WITWATERSRAND
LIGHTWEIGHT ALUMINIUM SEMI-TRAILER PROJECT

MATERIAL:	
SCALE:	1:2.5
DATE:	4-11-83
DRAWN:	M.ELSTON

TITLE: PLATE

DRG. No: SS-10

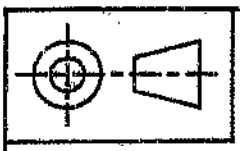

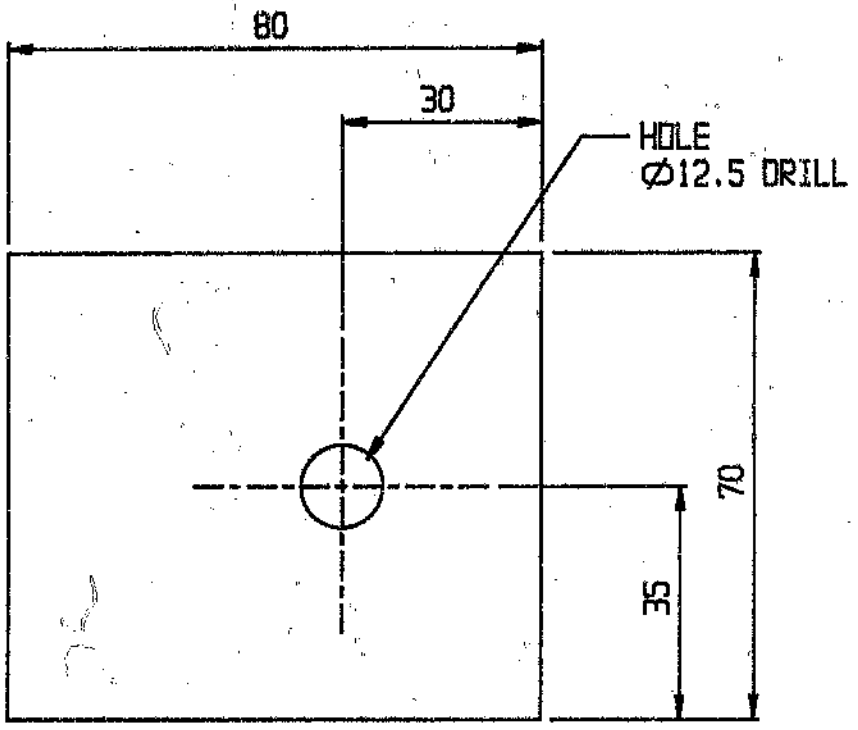

MATERIAL: 15.88 mm ALUMINIUM ALLOY PLATE 70 x 80
6151 - TF ALLOY.

UWtec		UNIVERSITY OF THE WITWATERSRAND	
		LIGHTWEIGHT ALUMINIUM SEMI-TRAILER PROJECT	
MATERIAL:		TITLE:	DRG. No:
SCALE:	1:1	PLATE	SS-11
DATE:	3-01-84		
DRAWN:	M FLSTON		

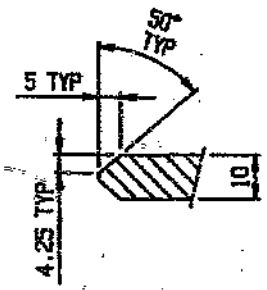

SECTION B-B
(WELD PREPARATION DETAIL)

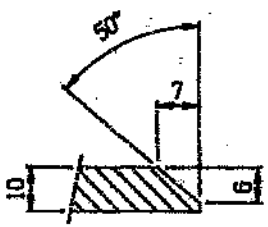

SECTION A-A
(WELD PREPARATION DETAIL)

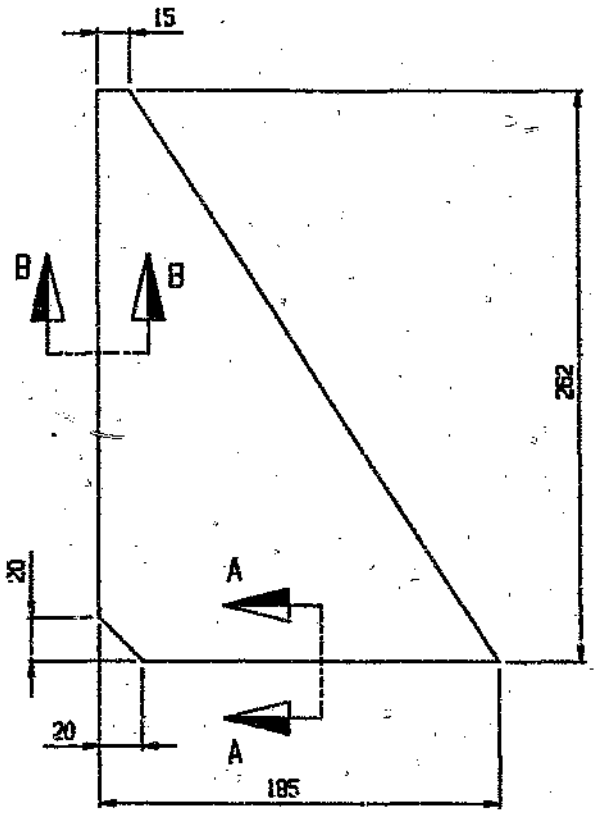

MATERIAL: 10 mm ALUMINIUM ALLOY PLATE 262 x 185
B51S - TF ALLOY

NOTE.

1. LH AS SHOWN. RH OPPOSITE.
2. GRIND WELD PREPARATIONS USING NON-CARBORUNDUM GRINDING DISCS.

ITEM	DESCRIPTION	MATERIAL	DRG. NUMBER	QTY

UWtec

UNIVERSITY OF THE WITWATERSRAND
LIGHTWEIGHT ALUMINIUM SEMI-TRAILER PROJECT

MATERIAL:	
SCALE:	1:2
DATE:	3-11-83
DRAWN:	M.ELSTON

TITLE: GUSSET PLATE

DRG. No: SS-12

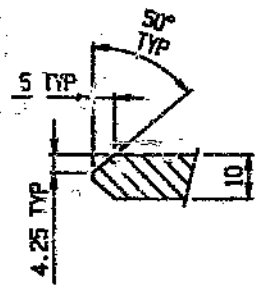

SECTION B-B
(WELD PREPARATION DETAIL)

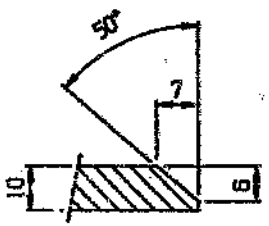

SECTION A-A
(WELD PREPARATION DETAIL)

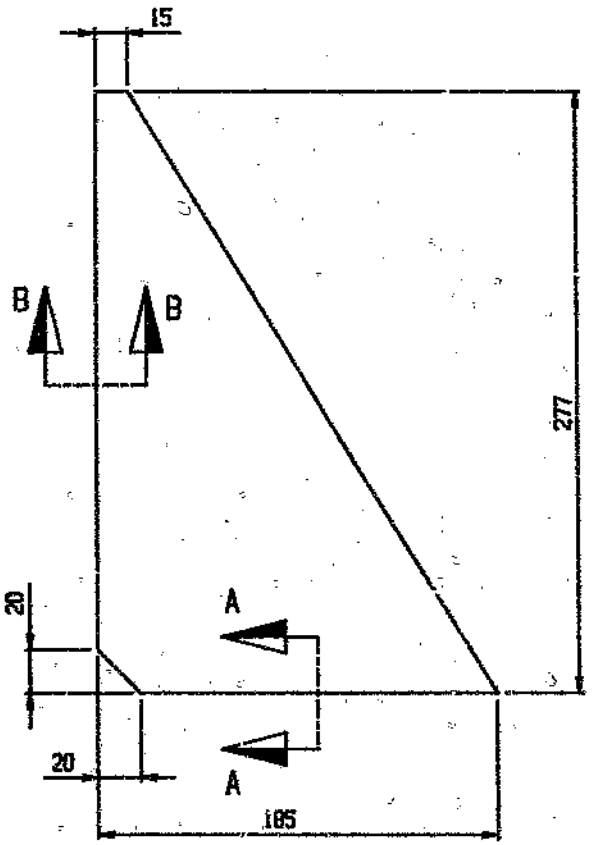

MATERIAL: 10 mp ALUMINIUM ALLOY PLATE 277 x 185
BS1S - TF ALLOY

NOTE.

1. LH AS SHOWN. RH OPPOSITE.
2. GRIND WELD PREPARATIONS USING NON-CARBORUNDUM GRINDING DISCS.

ITEM	DESCRIPTION	MATERIAL	DRG. NUMBER	QTY

UWtec

UNIVERSITY OF THE WITWATERSRAND
LIGHTWEIGHT ALUMINIUM SEMI-TRAILER PROJECT

MATERIAL:	
SCALE:	1:2
DATE:	3-11-83
DRAWN:	M.ELSTON

TITLE: GUSSET PLATE

DRG. No: SS-13

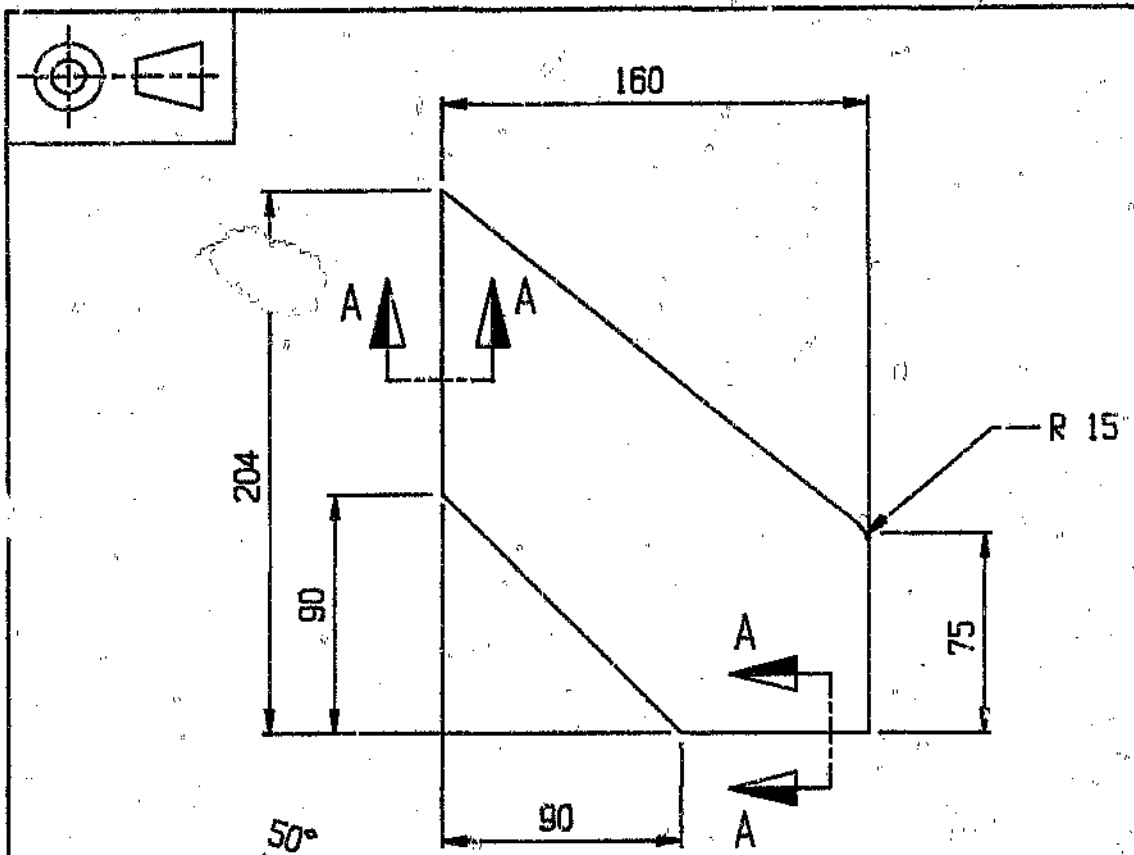

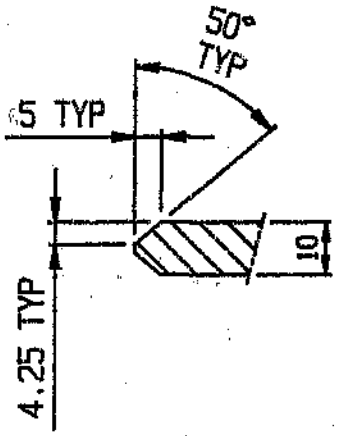

SECTION A-A
(WELD PREPARATION DETAIL)

NOTE.

1. GRIND WELD PREPARATIONS USING NON-CARBORUNDUM GRINDING DISCS.

MATERIAL: 10 mm ALUMINIUM ALLOY PLATE 204 x 160
B51S - TF ALLOY

UWtec		UNIVERSITY OF THE WITWATERSRAND	
		LIGHTWEIGHT ALUMINIUM SEMI-TRAILER PROJECT	
MATERIAL:		TITLE:	ORG. No:
SCALE:	1:2.5	GUSSET PLATE	SS-14
DATE:	3-11-83		
DRAWN:	M.ELSTON		

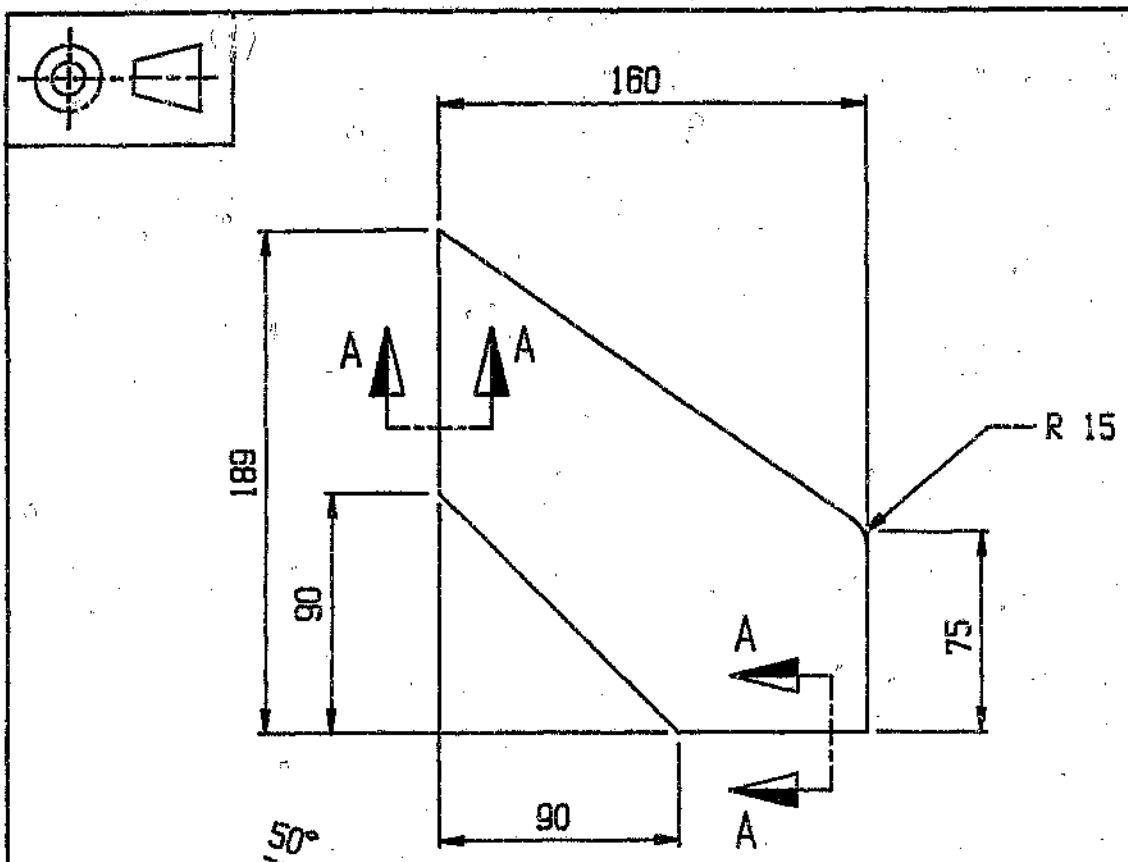

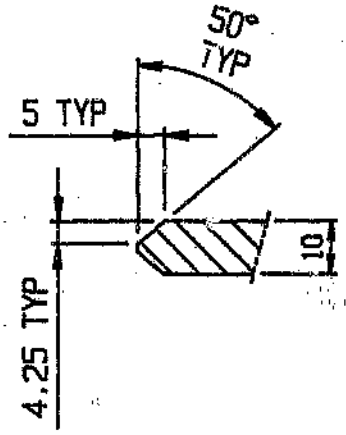

SECTION A-A
(WELD PREPARATION DETAIL)

NOTE.

1. GRIND WELD PREPARATIONS USING NON-CARBORUNDUM GRINDING DISCS.

MATERIAL: 10 mm ALUMINIUM ALLOY PLATE 189 x 160
B51S - TF ALLOY

UWtec	UNIVERSITY OF THE WITWATERSRAND		
	LIGHTWEIGHT ALUMINIUM SEMI-TRAILER PROJECT		
MATERIAL:		TITLE:	DRG. No:
SCALE:	1:2.5	GUSSET PLATE	SS-15
DATE:	3-11-83		
DRAWN:	M.ELSTON		

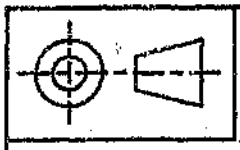

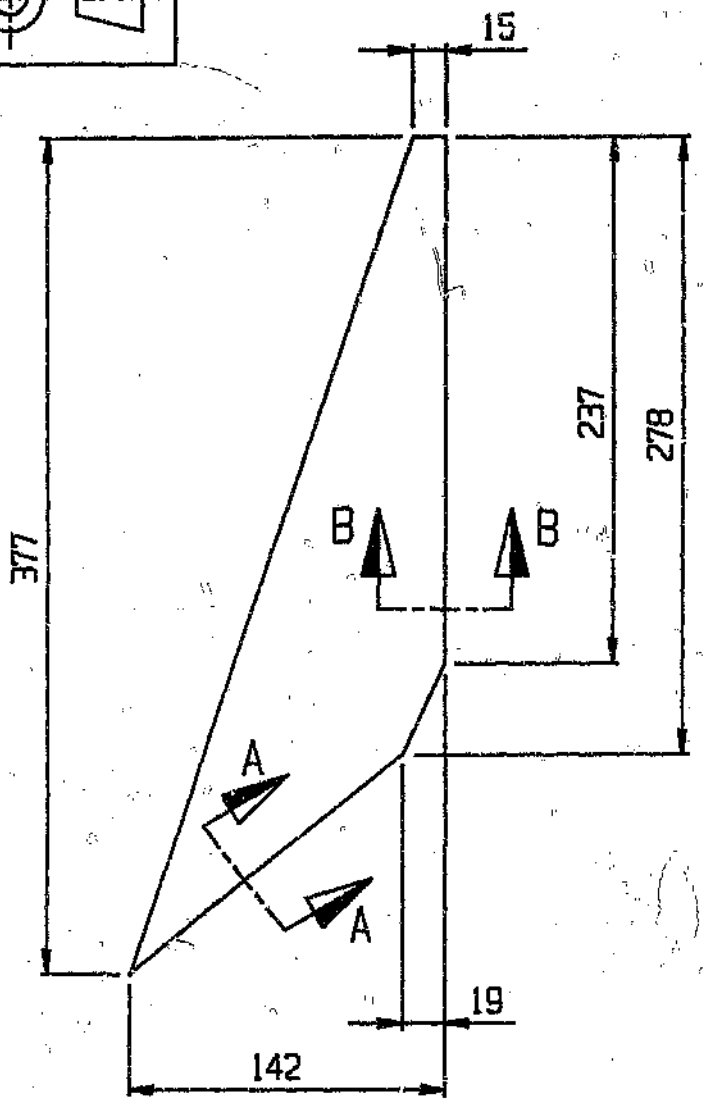

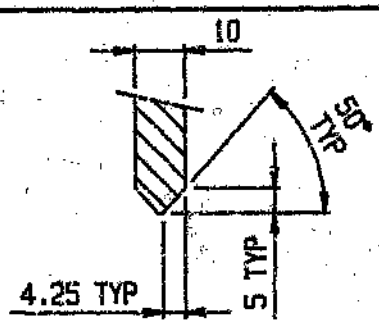

SECTION B-B
(WELD PREPARATION DETAIL)

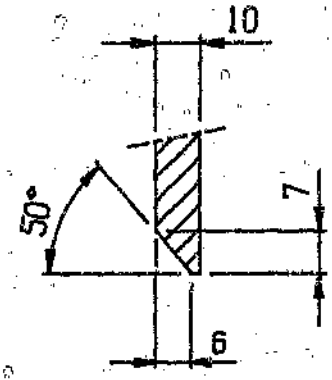

SECTION A-A
(WELD PREPARATION DETAIL)

NOTE.

1. LH AS SHOWN. RH OPPOSITE.
2. GRIND WELD PREPARATIONS USING NON-CARBORUNDUM GRINDING DISCS.

MATERIAL: 10 mm ALUMINIUM ALLOY PLATE 377 x 142
5083 - TF ALLOY

UWtec	UNIVERSITY OF THE WITWATERSRAND		
	LIGHTWEIGHT ALUMINIUM SEMI-TRAILER PROJECT		
MATERIAL:		TITLE:	DRG. No:
SCALE:	1:3	GUSSET PLATE	SS-13
DATE:	24-12-83		
DRAWN:	M.ELSTON		

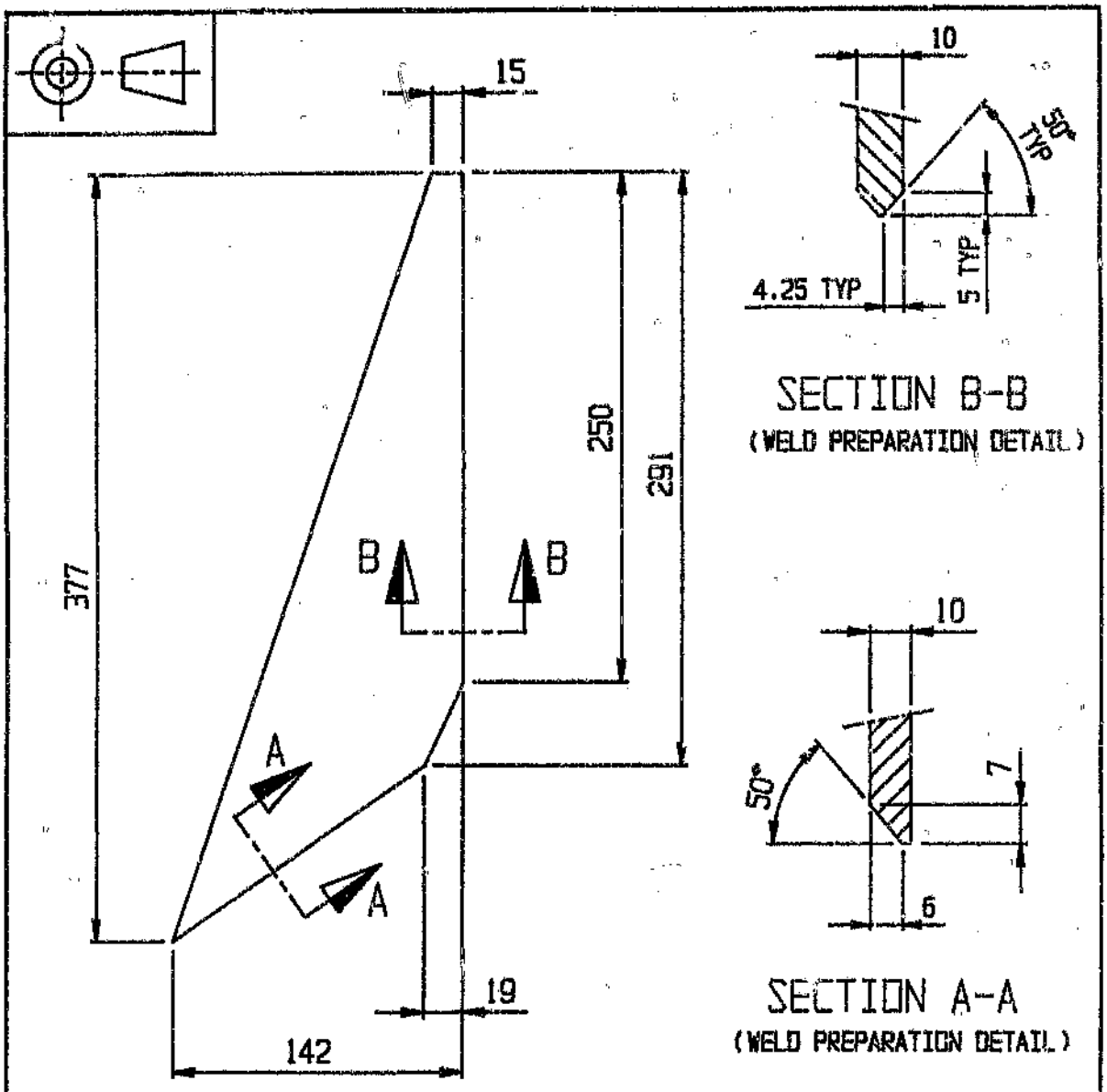

SECTION B-B
(WELD PREPARATION DETAIL)

SECTION A-A
(WELD PREPARATION DETAIL)

NOTE.

1. LH AS SHOWN. RH OPPOSITE.
2. GRIND WELD PREPARATIONS USING NON-CARBORUNDUM GRINDING DISCS.

MATERIAL: 10 mm ALUMINIUM ALLOY PLATE 377 x 142
BS1S - TF ALLOY

UWtec	UNIVERSITY OF THE WITWATERSRAND		
	LIGHTWEIGHT ALUMINIUM SEMI-TRAILER PROJECT		
MATERIAL:		TITLE:	DRG. No:
SCALE:	1:3	GUSSET PLATE	SS-17
DATE:	24-12-83		
DRAWN:	M.ELSTON		

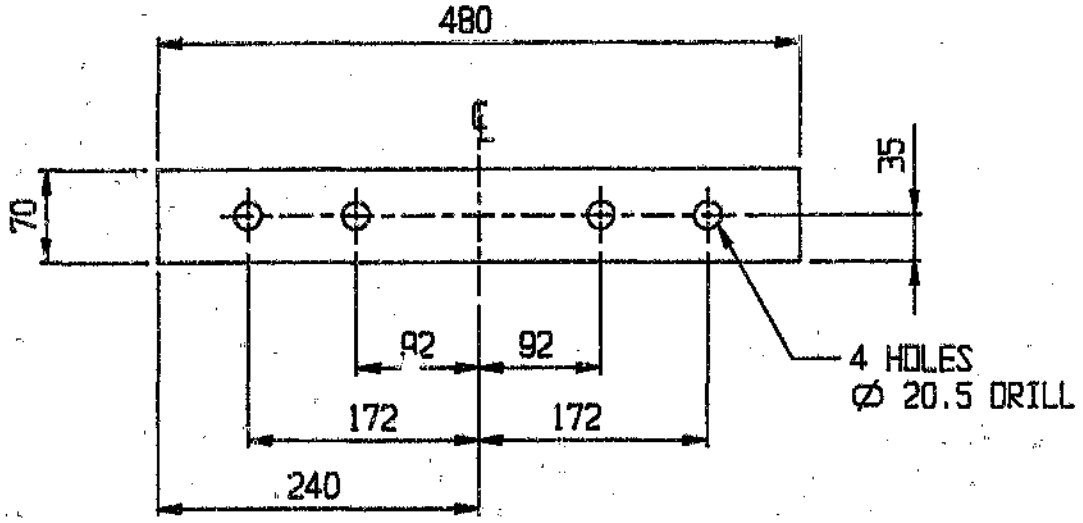

MATERIAL: 15.88 mm ALUMINIUM ALLOY PLATE 480 x 70
B51S - TF ALLOY

UWtec	UNIVERSITY OF THE WITWATERSRAND LIGHTWEIGHT ALUMINIUM SEMI-TRAILER PROJECT	
MATERIAL:	TITLE:	DRG. No:
SCALE: 1:5	PLATE	SS-18
DATE: 16-12-83		
DRAWN: M.ELSTON		

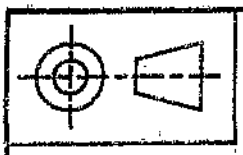

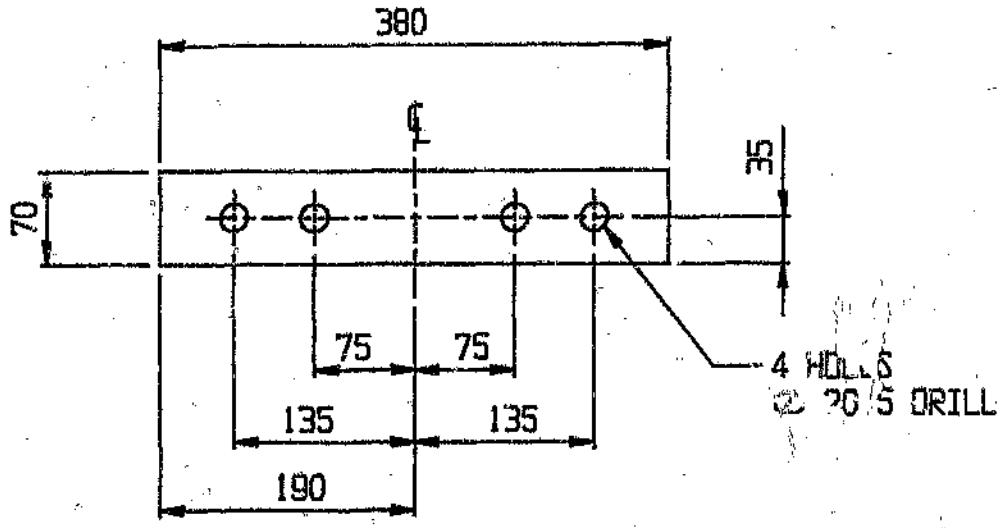

MATERIAL: 15.88 mm ALUMINIUM ALLOY PLATE 380 x 70
6151 - TF ALLOY

UWtec	UNIVERSITY OF THE WITWATERSRAND LIGHTWEIGHT ALUMINIUM SEMI-TRAILER PROJECT	
MATERIAL:	TITLE:	DRG. No:
SCALE: 1:5	PLATE	SS-19
DATE: 4-1-84		
DRAWN: M.ELSTON		

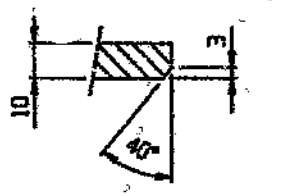

SECTION A-A
(WELD PREPARATION DETAIL)

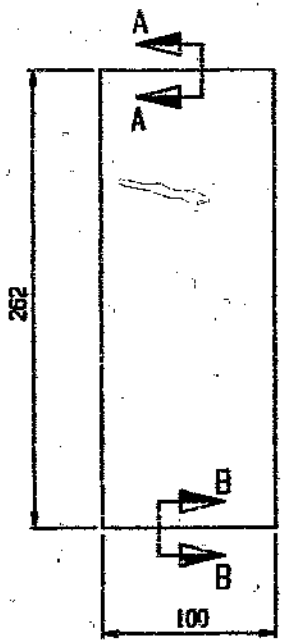

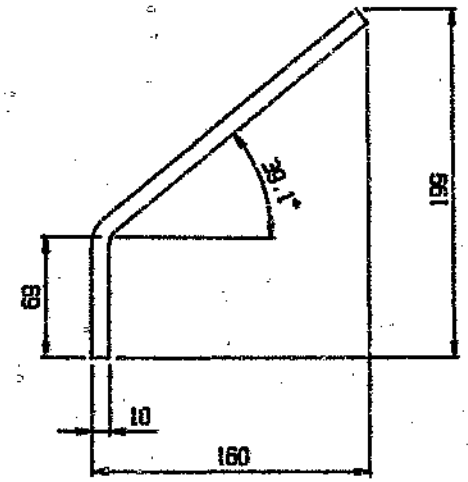

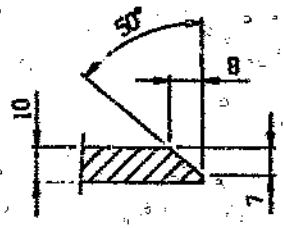

SECTION B-B
(WELD PREPARATION DETAIL)

MATERIAL: 10 mm ALUMINIUM PLATE 100 x 262
BS1S - TF ALLOY

NOTE.

1. GRIND WELD PREPARATIONS USING NON-CARBORUNDUM GRINDING DISCS.

ITEM	DESCRIPTION	MATERIAL	DRG. NUMBER	QTY

UWtec

UNIVERSITY OF THE WITWATERSRAND
LIGHTWEIGHT ALUMINIUM SEMI-TRAILER PROJECT

MATERIAL:	
SCALE:	1:2.5
DATE:	4-1-84
DRAWN:	M.ELSTEIN

TITLE: T-GUSSET FLANGE

DRG. No: SS-20

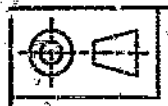

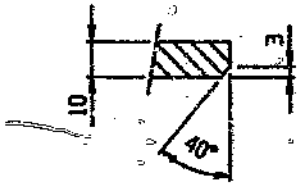

SECTION A-A
(WELD PREPARATION DETAIL)

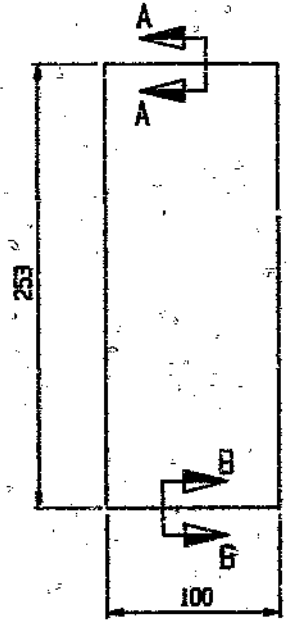

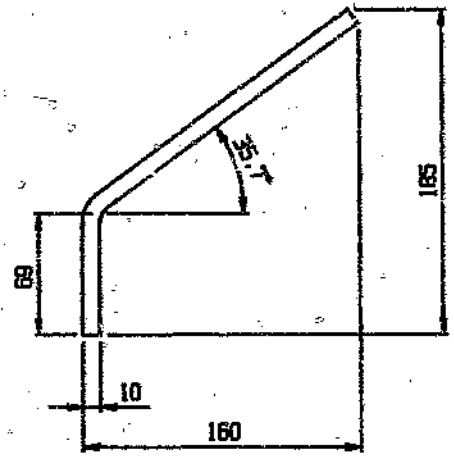

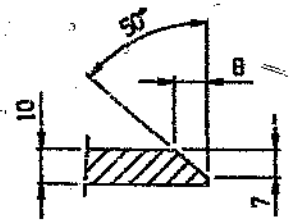

SECTION B-B
(WELD PREPARATION DETAIL)

MATERIAL: 10 mm ALUMINIUM PLATE 100 x 253
B51S - TF ALLOY

NOTE.

1. GRIND WELD PREPARATIONS USING NON-CARBORUNDUM GRINDING DISCS.

ITEM	DESCRIPTION	MATERIAL	DRG. NUMBER	QTY

UWtec	UNIVERSITY OF THE WITWATERSRAND
	LIGHTWEIGHT ALUMINIUM SEMI-TRAILER PROJECT
MATERIAL:	
SCALE:	1:2.5
DATE:	4-1-84
DRAWN:	M.ELSTON
TITLE:	T-GUSSET FLANGE
DRG. No:	SS--21

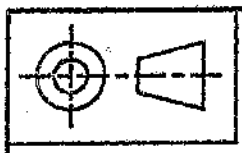

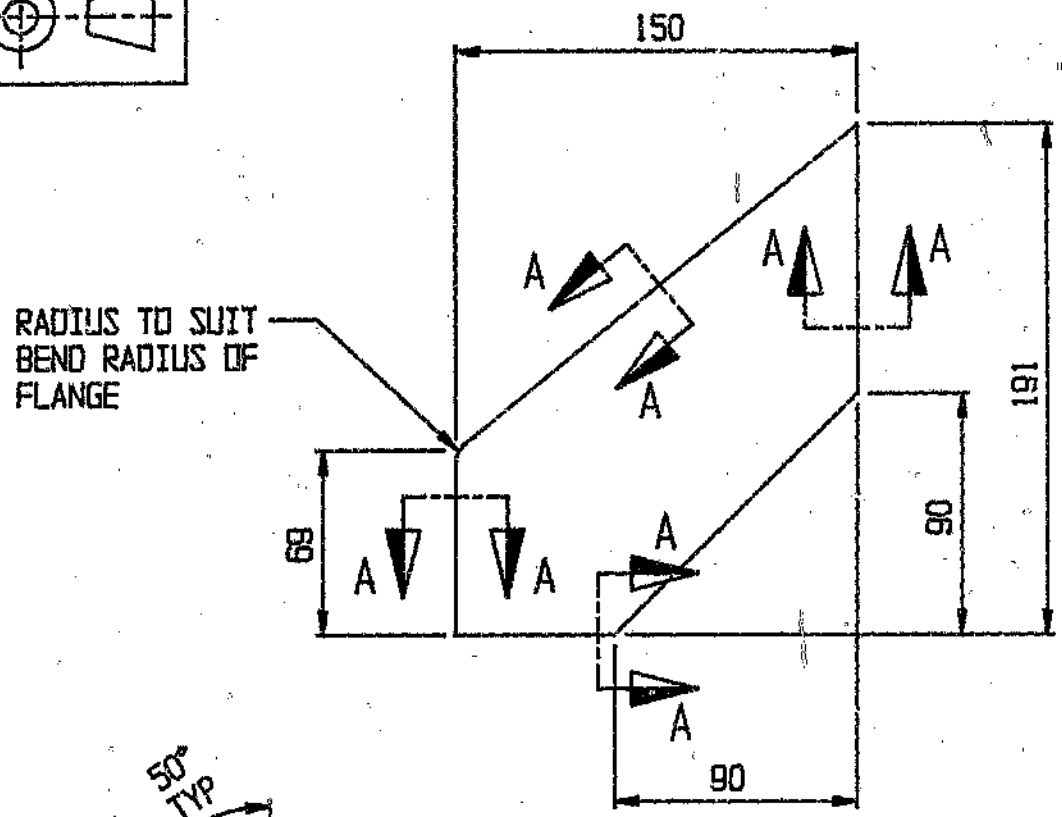

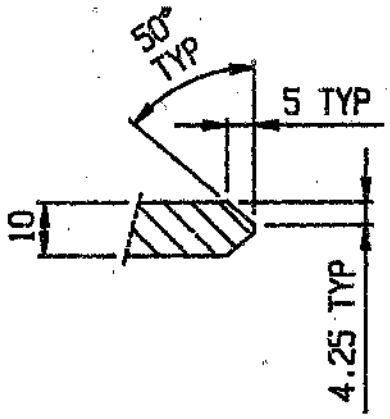

SECTION A-A
(WELD PREPARATION DETAIL)

NOTE.

1. GRIND WELD PREPARATIONS USING NON-CARBORUNDUM GRINDING DISCS.

MATERIAL: 10 mm ALUMINIUM ALLOY PLATE 150 x 191
B51S - TF ALLOY

UWtec		UNIVERSITY OF THE WITWATERSRAND LIGHTWEIGHT ALUMINIUM SEMI-TRAILER PROJECT	
MATERIAL:		TITLE:	DRG. No:
SCALE:	1:2.5	T-GUSSET WEB	SS-22
DATE:	3-11-83		
DRAWN:	M.ELSTON		

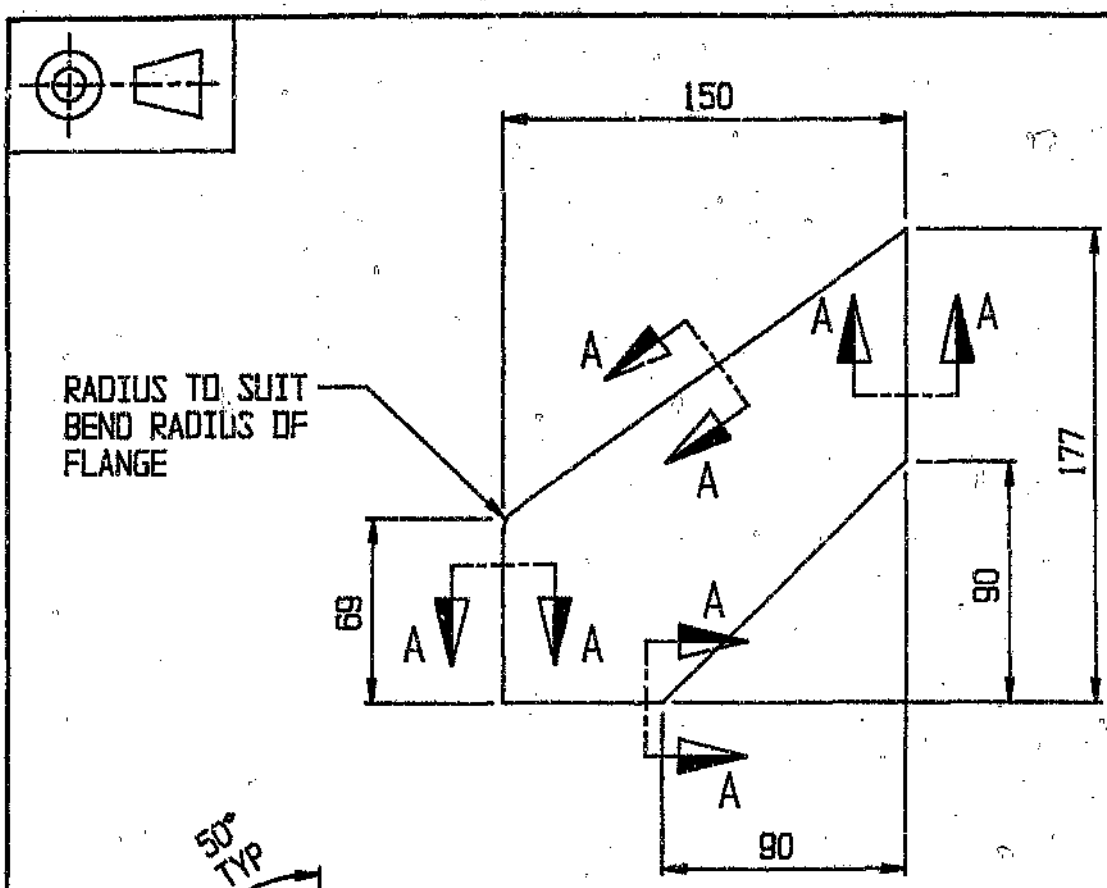

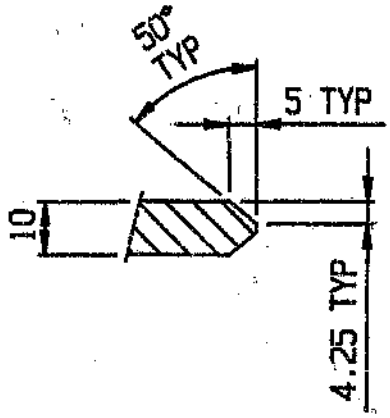

SECTION A--A

(WELD PREPARATION DETAIL)

NOTE.

1. GRIND WELD PREPARATIONS USING NON-CARBORUNDUM GRINDING DISCS.

MATERIAL: 10 mm ALUMINIUM ALLOY PLATE 150 x 177
B51S - TF ALLOY

UWtec		UNIVERSITY OF THE WITWATERSRAND	
		LIGHTWEIGHT ALUMINIUM SEMI-TRAILER PROJECT	
MATERIAL:		TITLE:	DRG. No:
SCALE:	1:2.5	T-GUSSET WEB	SS-23
DATE:	3-11-83		
DRAWN:	M.ELSTON		

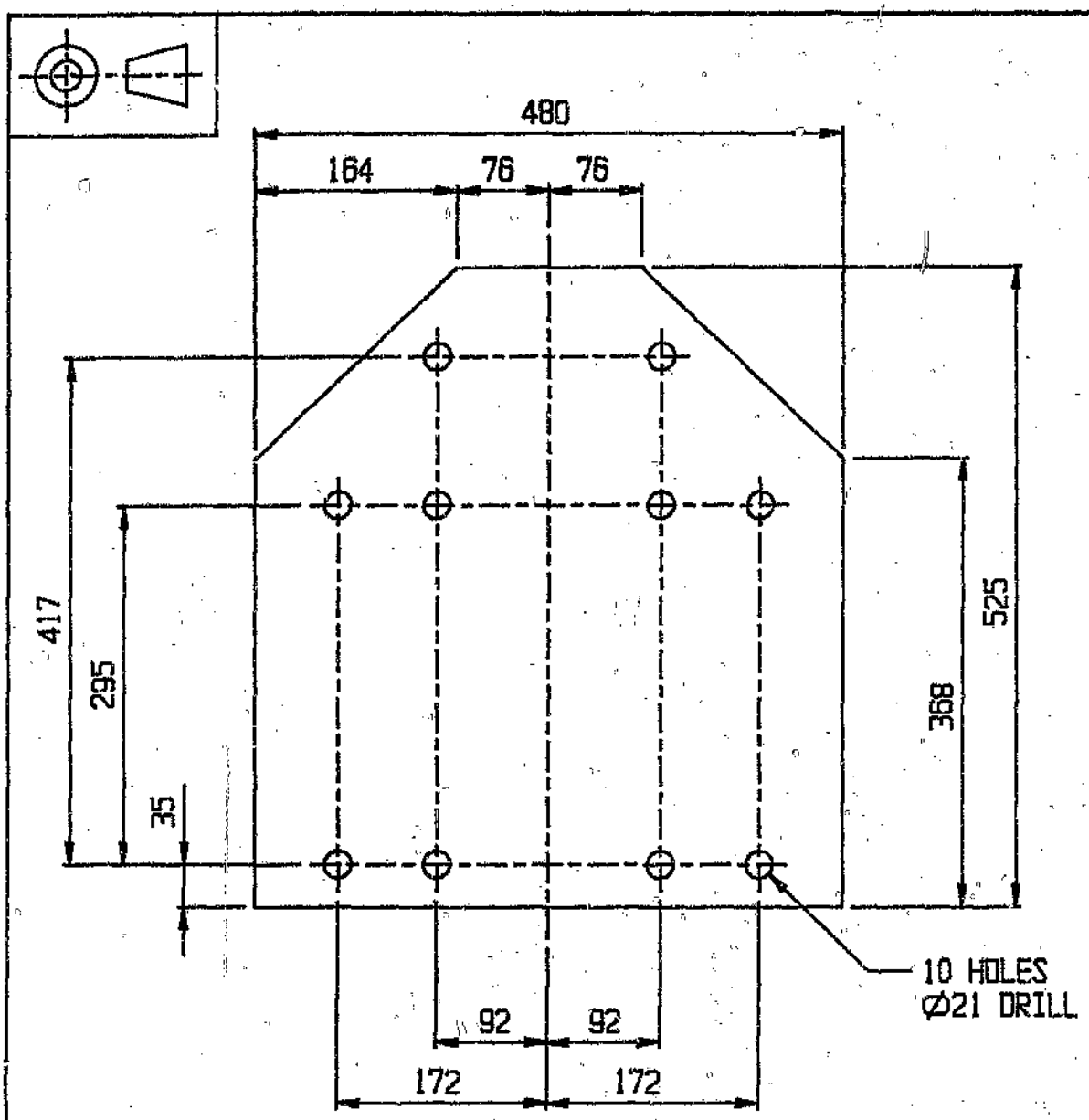

MATERIAL: 10mm STEEL PLATE 480 x 525
BS 4360 GD 43A STEEL

UWtec

UNIVERSITY OF THE WITWATERSRAND

LIGHTWEIGHT ALUMINIUM SEMI-TRAILER PROJECT

MATERIAL:	
SCALE:	1:5
DATE:	3-04-84
DRAWN:	M.ELSTON

TITLE:

SUSPENSION HANGER MOUNTING PLATE

DRG. No:

SS-24

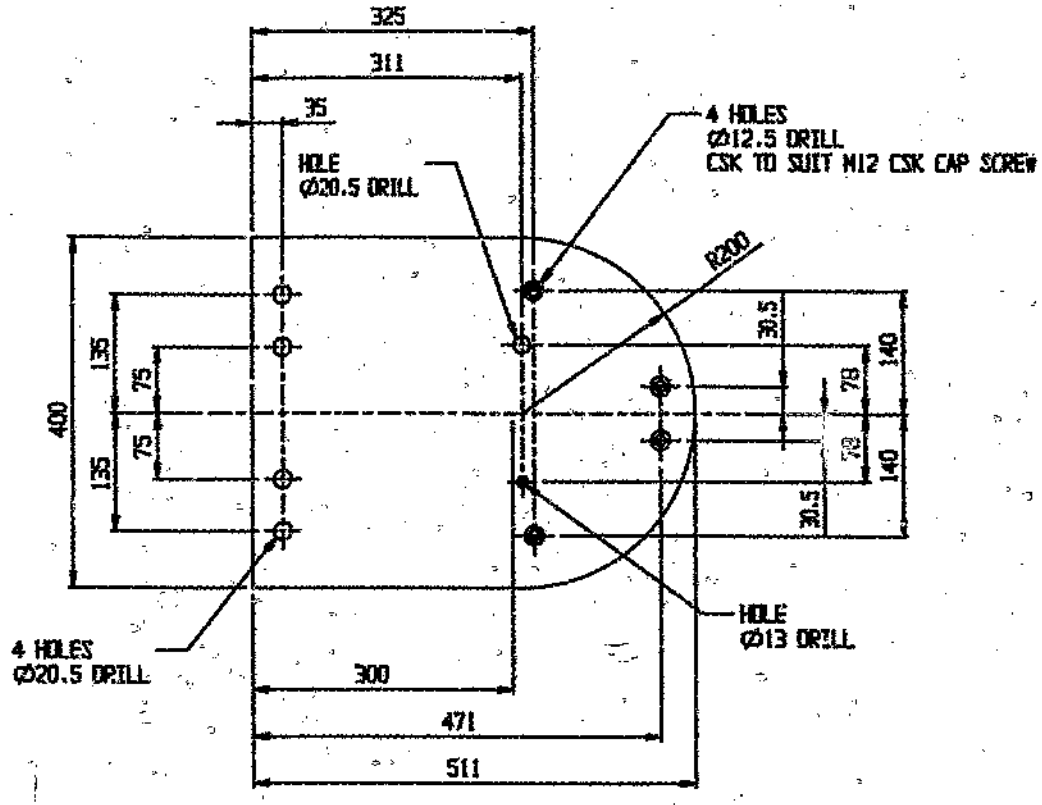

MATERIAL: 15.88 mm ALUMINIUM ALLOY PLATE 400 x 511
B51S - TF ALLOY.

NOTE.

1. LH SHOWN. RH OPPOSITE.

ITEM	DESCRIPTION	MATERIAL	DRG. NUMBER	QTY

UWtec

UNIVERSITY OF THE WITWATERSRAND

LIGHTWEIGHT ALUMINIUM SEMI-TRAILER PROJECT

MATERIAL:	
SCALE:	1:5
DATE:	3-01-84
DRAWN:	H.ELSTON

TITLE: AIR BAG MOUNTING PLATE

DRG. No: SS-25

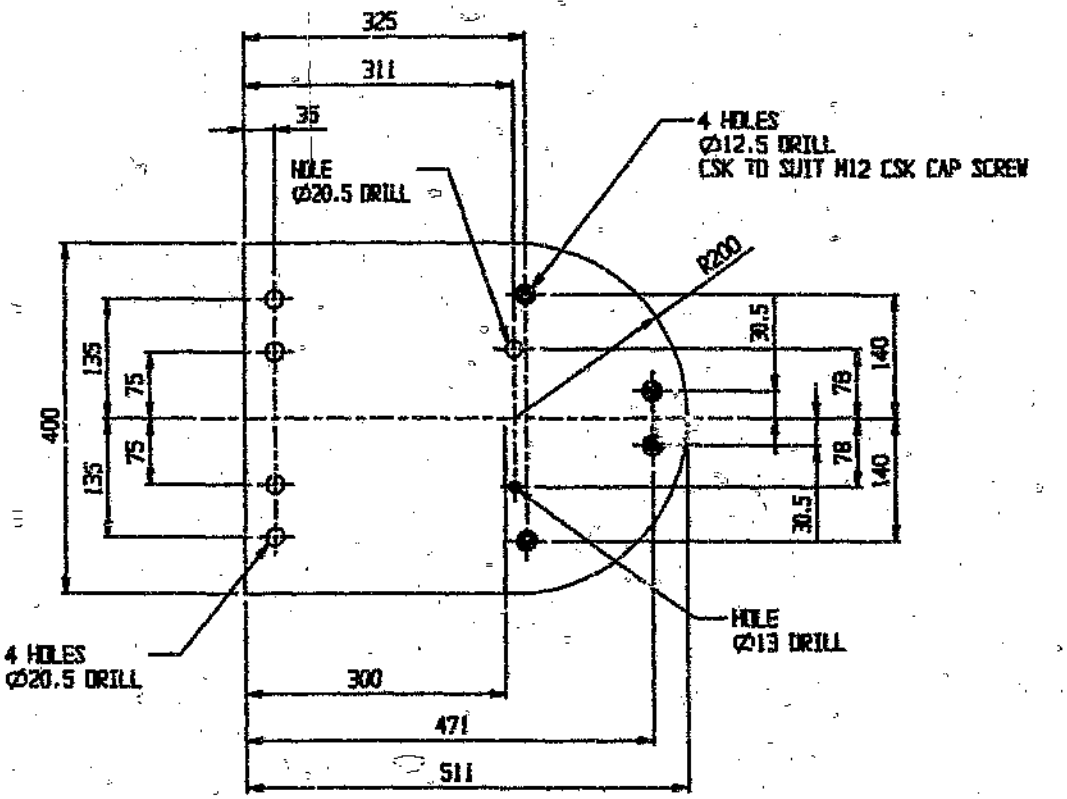

MATERIAL: 15.00 mm ALUMINIUM ALLOY PLATE 400 x 511
BS1S - TF ALLOY.

NOTE.

1. LH SHOWN. RH OPPOSITE.

ITEM	DESCRIPTION	MATERIAL	DRG. NUMBER	QTY

UWtec

UNIVERSITY OF THE WITWATERSRAND

LIGHTWEIGHT ALUMINIUM SEMI-TRAILER PROJECT

MATERIAL:	
SCALE:	1:5
DATE:	3-01-04
DRAWN:	M.ELSTON

TITLE: AIR BAG MOUNTING PLATE

DRG. No: SS-25

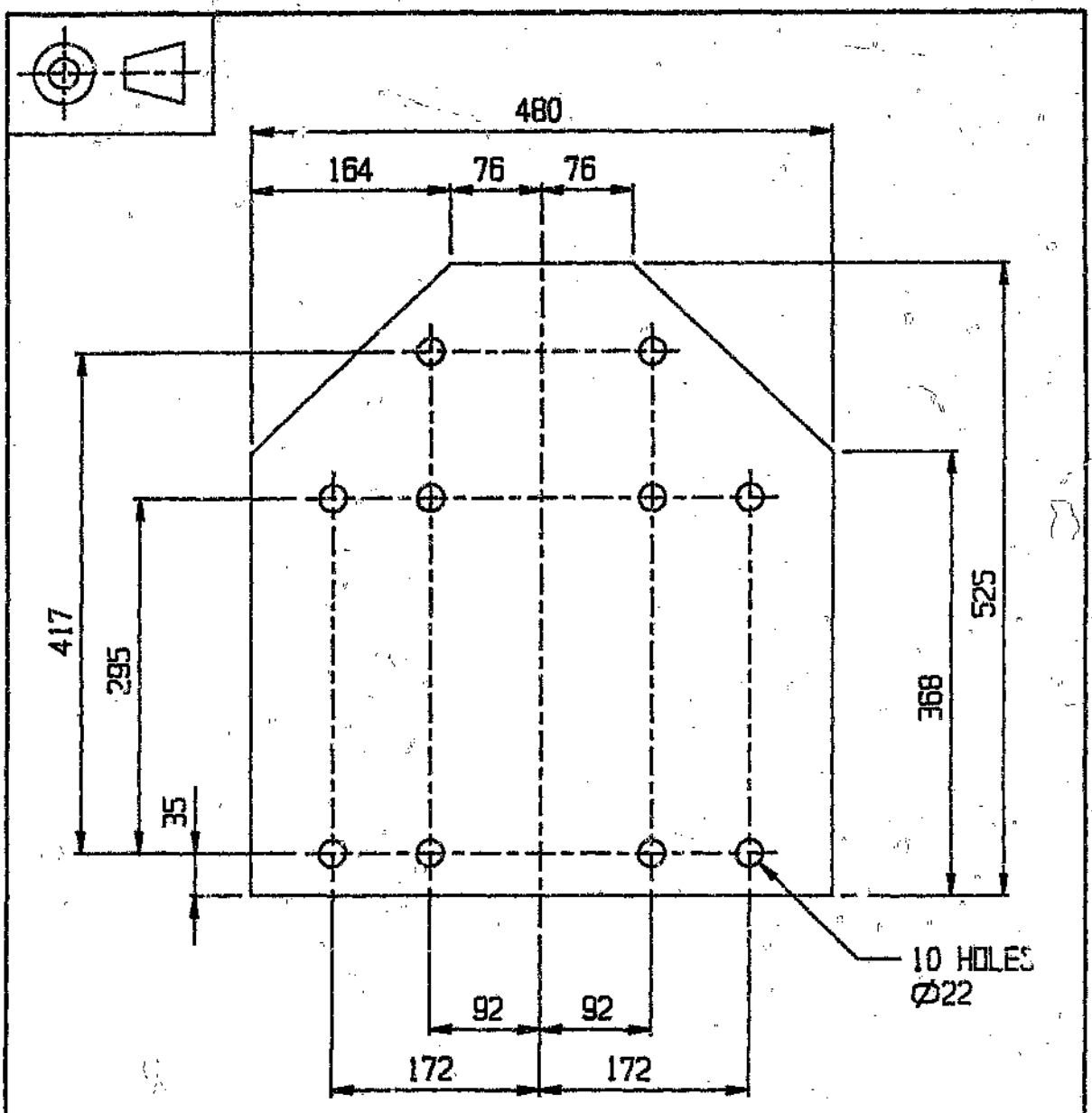

MATERIAL: 10mm RUBBER GASKET 480 x 525

UWtec		UNIVERSITY OF THE WITWATERSRAND	
		LIGHTWEIGHT ALUMINIUM SEMI-TRAILER PROJECT	
MATERIAL:		TITLE: SUSPENSION HANGER RUBBER GASKET	DRG. No: SS-26
SCALE:	1:5		
DATE:	3-04-84		
DRAWN:	M.ELSTON		

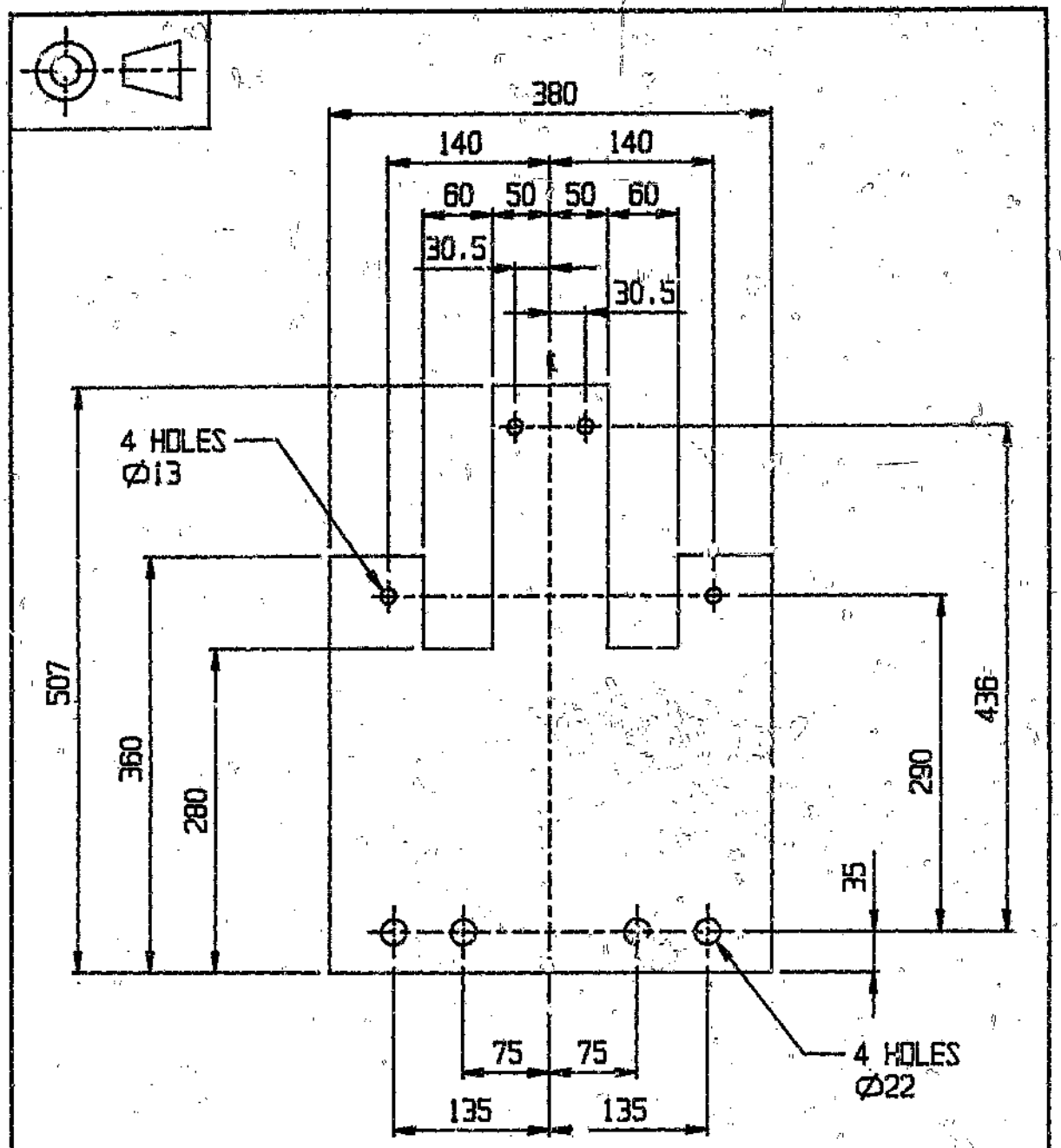

MATERIAL: 10mm RUBBER GASKET 380 x 511

UWtec	UNIVERSITY OF THE WITWATERSRAND		
	LIGHTWEIGHT ALUMINIUM SEMI-TRAILER PROJECT		
MATERIAL:		TITLE: AIR BAG RUBBER GASKET	DRG. No: SS-27
SCALE:	1:5		
DATE:	3-04-84		
DRAWN:	M.ELSTON		

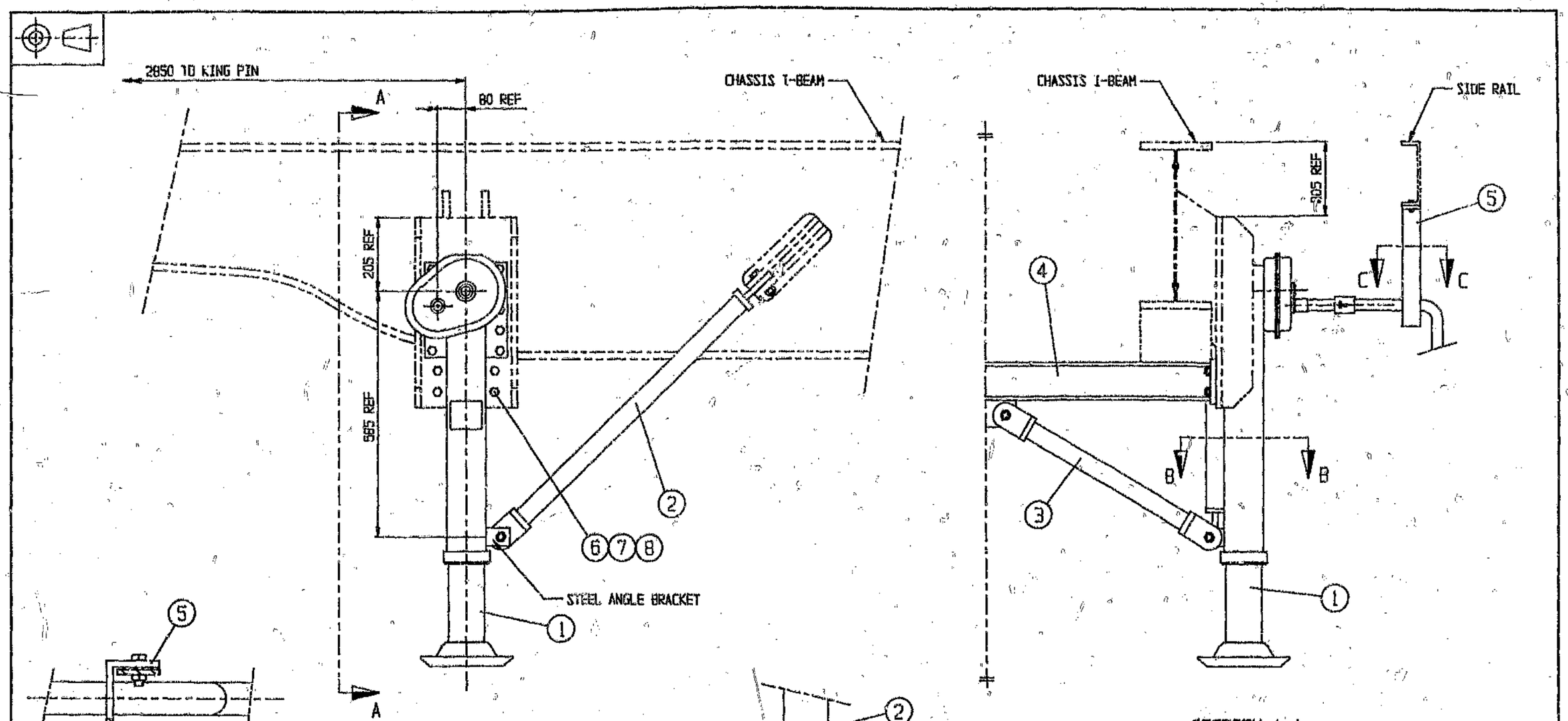

ITEM	DESCRIPTION	MATERIAL	DRG./PART NUMBER	QTY
8	NUT	M14 CLEVELOC NUT (GD 8), CADMIUM PLATING	-	20
7	WASHER	M14 HS FLAT PREC WASHER, CADMIUM PLATING	-	20
6	BOLT	M14 x 50 HEX BOLT (CD 8.8), CADMIUM PLATING	-	20
5	LANDING LEG CRANK BRACKET ASSEMBLY	-	LL-11	2
4	LANDING LEG CROSS-MEMBER ASSEMBLY	-	LL-02	1
3	LANDING LEG CROSS BRACE ASSEMBLY	-	LL-04	2
2	LANDING LEG REARWARD BRACE ASSEMBLY	-	LL-05	2
1	JOST E240G TWO SIDE OPERATION LANDING LEGS	-	JOST E240G	1

NOTE.

1. STEEL ANGLE BRACKETS TO BE TACKED IN POSITION WITH THE LANDING LEGS ASSEMBLED ONTO THE CHASSIS AND WITH THE BRACES LOOSELY BOLTED IN PLACE. THERE AFTER BRACES TO BE REMOVED TO COMPLETE WELDING OF ANGLE BRACKETS.
2. ITEM 5 TO BE POSITIONED ON ASSEMBLY TO SUIT CRANK HANDLES.

UWtec

UNIVERSITY OF THE WITWATERSRAND

LIGHTWEIGHT ALUMINIUM SEMI-TRAILER PROJECT

MATERIAL:	
SCALE:	1:7.5
DATE:	10-01-90
DRAWN:	M.ELSTON

TITLE: LANDING LEG ASSEMBLY

DRG. No: LL-01

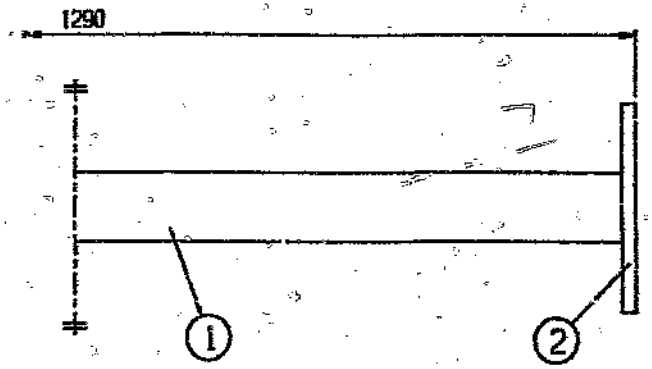

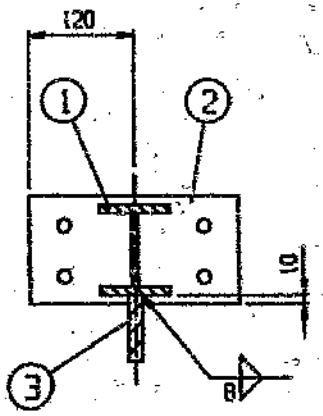

SECTION A-A

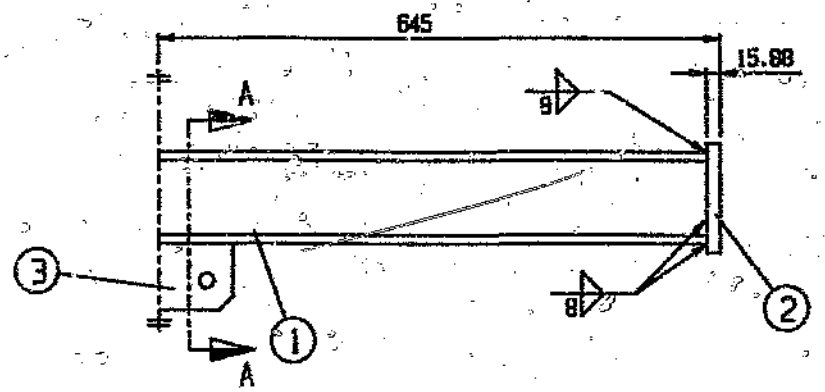

NOTE.

1. ALL WELDS TO BE MIG WELDS. FILLER ALLOY AA 5356 1.2 mm WIRE.

ITEM	DESCRIPTION	MATERIAL	DRG. NUMBER	QTY
6	WASHER	M14 HS FLAT PREC. WASHER, CADMIUM PLATED	-	8
5	NUT	M14 ELEVELOC NUT (GR 8), CADMIUM PLATED	-	8
4	BOLT	M14 x 55 HEX BOLT (GD 8.8), CADMIUM PLATED	-	8
3	BRACKET	6S1S - T6 AL. ALLOY	LL-16	1
2	FLANGE	6S1S - T6 AL. ALLOY	LL-15	2
1	I-SECTION	EXTRUDED AL. I-SECTION 145 x 80 x 10 x 6 x 1250 LG BILLETS SOURCE No. 5208 / 6082 - T6 ALLOY	-	1

UWtec

UNIVERSITY OF THE WITWATERSRAND
LIGHTWEIGHT ALUMINIUM SEMI-TRAILER PROJECT

MATERIAL:	
SCALE:	1:5
DATE:	8-01-94
DRAWN:	M. ELSTON

TITLE: LANDING LEG CROSS-MEMBER ASSEMBLY

DRG. No: LL-02

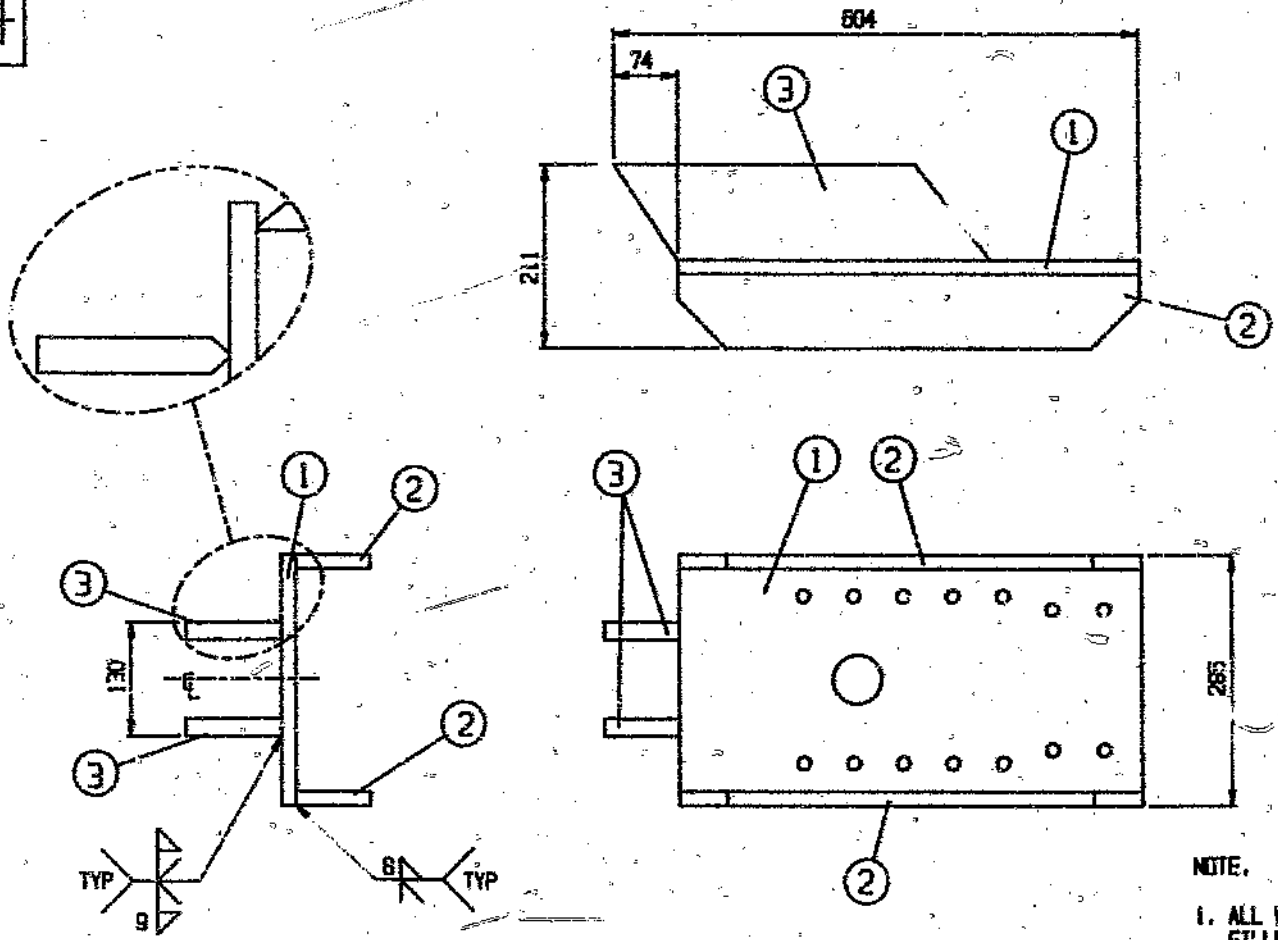

ITEM	DESCRIPTION	MATERIAL	DRG. NUMBER	QTY
3	PLATE	6061S - T6 AL. ALLOY	LL-03	1 EA 1 OFF
2	PLATE	6061S - T6 AL. ALLOY	LL-06	2
1	MOUNTING PLATE	6061S - T6 AL. ALLOY	LL-07	1

UWtec

MATERIAL:	
SCALE:	1:5
DATE:	6-4-04
DRAWN:	M. ELSTON

UNIVERSITY OF THE WITWATERSRAND

LIGHTWEIGHT ALUMINIUM SEMI-TRAILER PROJECT

TITLE: LANDING LEG MOUNTING BRACKET ASSEMBLY

DRG. No: LL-03

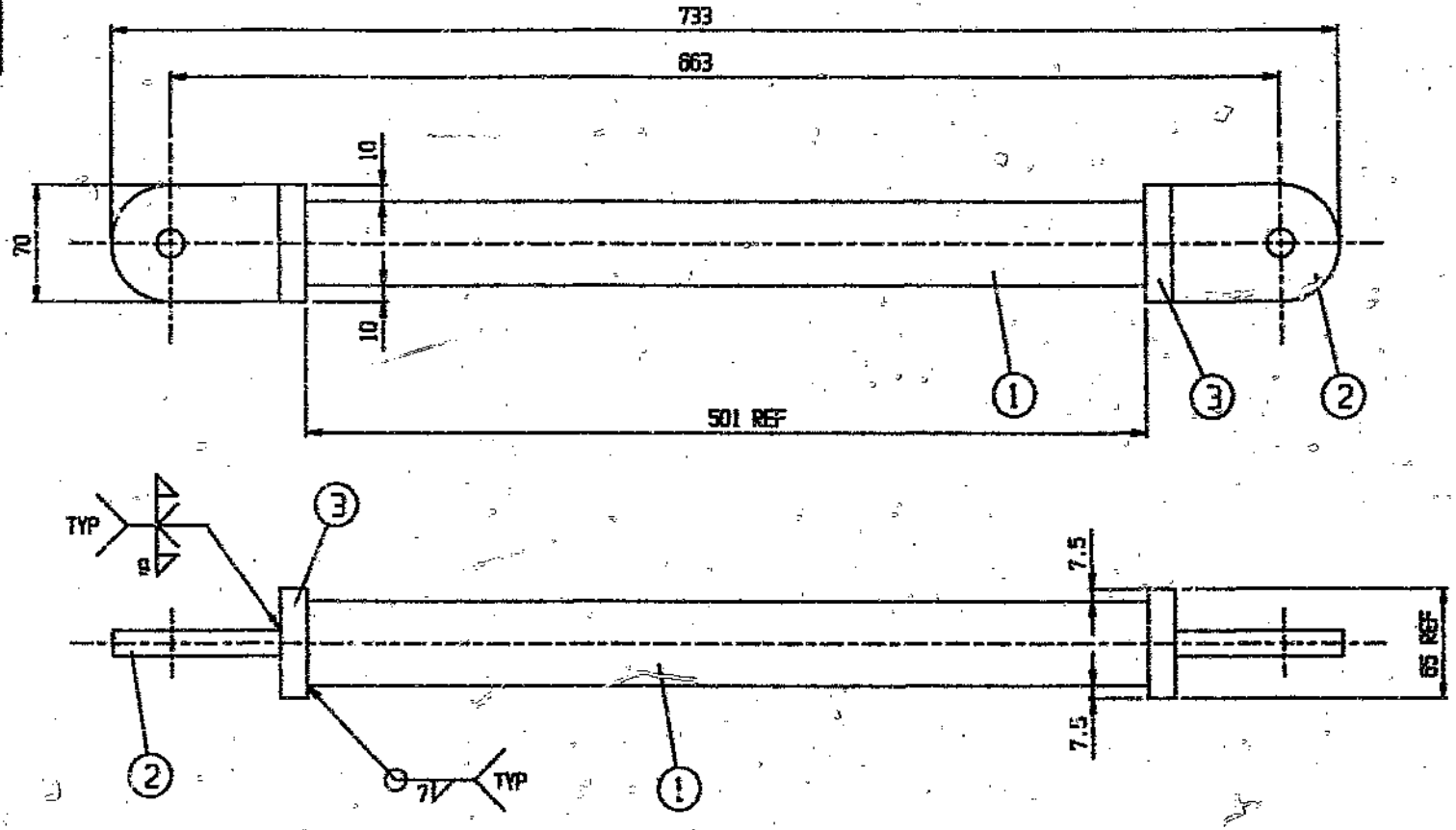

NOTE.

1. ALL WELDS TO BE MIG WELDS. FILLER ALLOY AA 5356 1.2 mm WIRE.

ITEM	DESCRIPTION	MATERIAL	DRG. NUMBER	QTY
6	WASHER	M10 MS FLAT PREC. WASHER, CADMIUM PLATED	-	2
5	NUT	M10 CLEVELOC NUT (GD 8), CADMIUM PLATED	-	2
4	BOLT	M10 x 55 HEX BOLT (GD 8.8), CADMIUM PLATED	-	2
3	PLATE	15.00 mm ALUMINIUM PLATE 70 x 65 6151S - TF ALLOY	-	2
2	END PLATE	6151S - TF AL. ALLOY	LL-09	2
1	TUBE	ALUMINIUM TUBE 50.8 DIA. x 6.35 WALL x 501 LG HULETTS SHAPE No. H412 / 6061 - TF ALLOY	-	1

UWtec

UNIVERSITY OF THE WITWATERSRAND

LIGHTWEIGHT ALUMINIUM SEMI-TRAILER PROJECT

MATERIAL:	
SCALE:	1:2.5
DATE:	13-01-84
DRAWN:	M.ELSTON

TITLE: LANDING LEG CROSS BRACE ASSEMBLY

DRG. No: LL-04

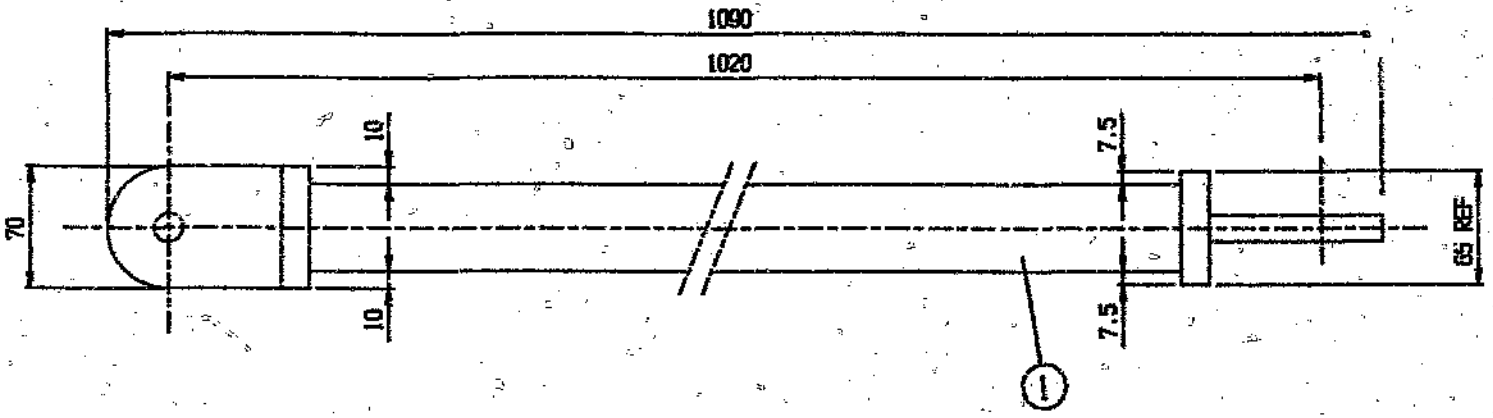

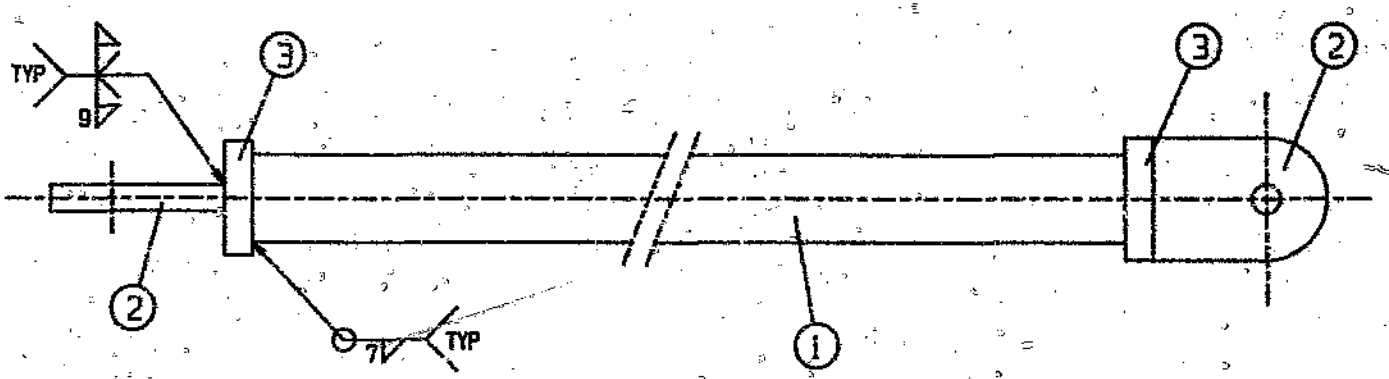

ITEM	DESCRIPTION	MATERIAL	DRG. NUMBER	QTY
7	WASHER	M16 NS FLAT PREC. WASHER, CADMIUM PLATED	-	2
6	NUT	M16 CLEVELOC NUT (GD 8), CADMIUM PLATED	-	2
5	BOLT	M16 x 55 HEX BOLT (GD 8.8), CADMIUM PLATED	-	1
4	BOLT	M16 x 55 HEX BOLT (GD 8.8), CADMIUM PLATED	-	1
3	PLATE	15.88 mm ALUMINIUM PLATE 70 x 85 B51S - TF ALLOY	-	2
2	END PLATE	B51S - TF ALLOY	LL-09	2
1	TUBE	ALUMINIUM TUBE 50.8 SG. x 6.35 WALL x 1020 LG HILLETTS SHAPE No. H412 / 0955 - TF ALLOY	-	1

NOTE.

1. ALL WELDS TO BE MIG WELDS. FILLER ALLOY AA 5356 1.2 mm WIRE.

UWtec

UNIVERSITY OF THE WITWATERSRAND

LIGHTWEIGHT ALUMINIUM SEMI-TRAILER PROJECT

MATERIAL:	
SCALE:	1:2.5
DATE:	14-01-84
DRAWN:	M.ELSTON

TITLE: LANDING LEG REARWARD BRACE ASSEMBLY

DRG. No: LL-05

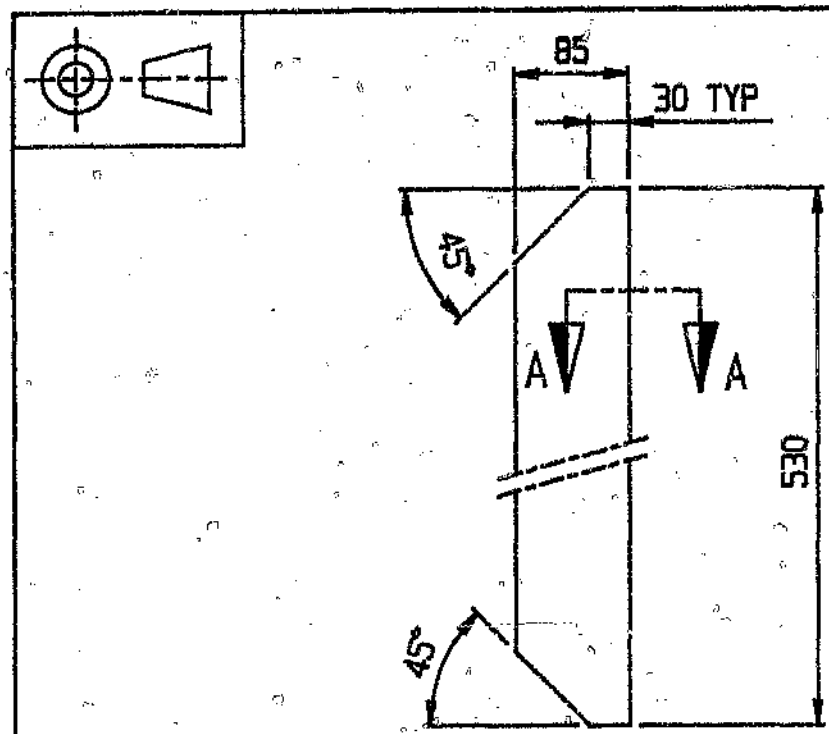

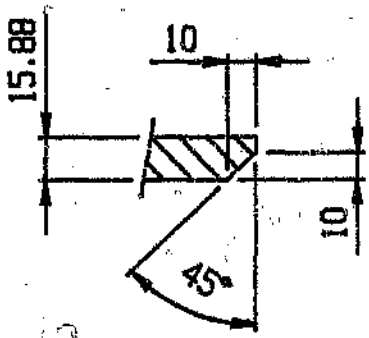

SECTION A-A
(WELD PREPARATION DETAIL)

MATERIAL: 15.88 mm ALUMINIUM PLATE 85 x 530
B51S - TF ALLOY

NOTE.

1. GRIND WELD PREPARATIONS USING NON-CARBORUNDUM GRINDING DISCS.

UWtec	UNIVERSITY OF THE WITWATERSRAND LIGHTWEIGHT ALUMINIUM SEMI-TRAILER PROJECT		
MATERIAL:		TITLE:	DRG. No:
SCALE:	1:5	PLATE	LL-06
DATE:	8-01-84		
DRAWN:	M.ELSTON		

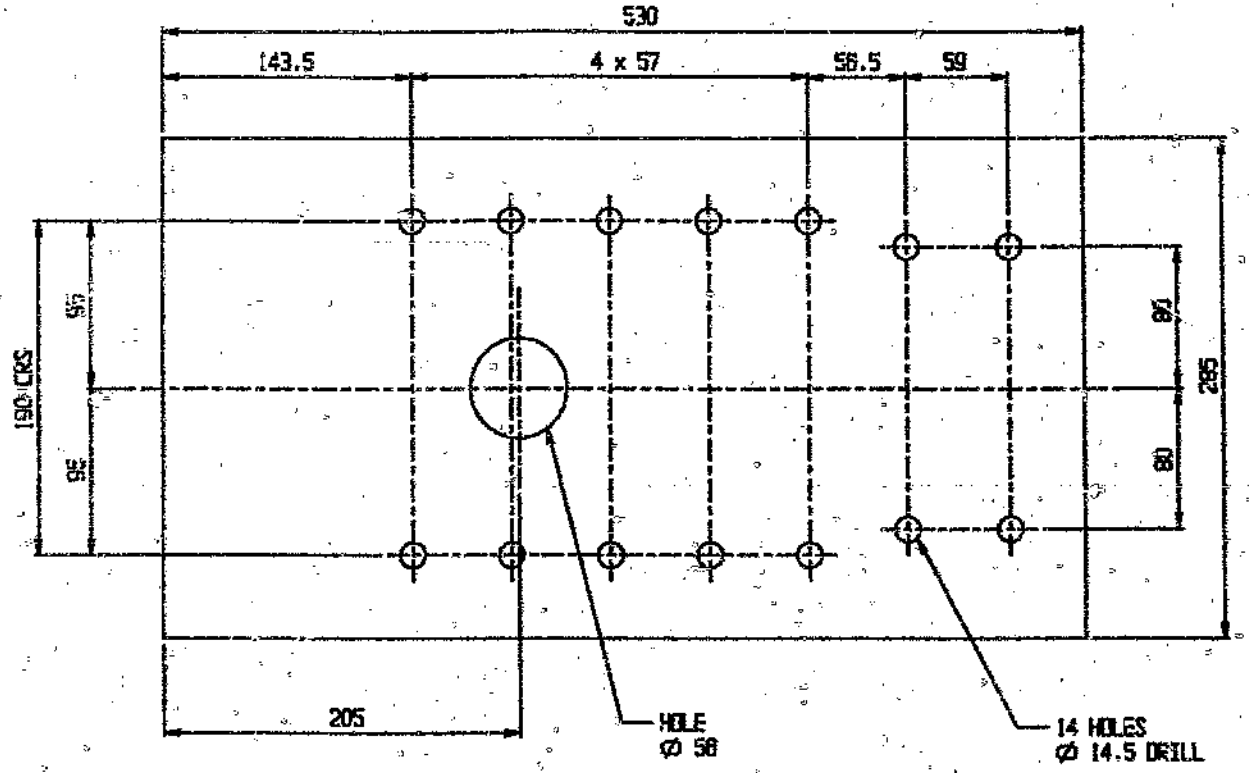

MATERIAL: 15.88 mm ALUMINIUM ALLOY PLATE 285 x 530
BSIS - TF ALLOY

ITEM	DESCRIPTION	MATERIAL	DRG. NUMBER	QTY

UWtec

UNIVERSITY OF THE WITWATERSRAND
LIGHTWEIGHT ALUMINIUM SEMI-TRAILER PROJECT

MATERIAL:	
SCALE:	1:2.5
DATE:	7-01-84
DRAWN:	M.ELSTON

TITLE: MOUNTING PLATE

DRG. No: LL-07

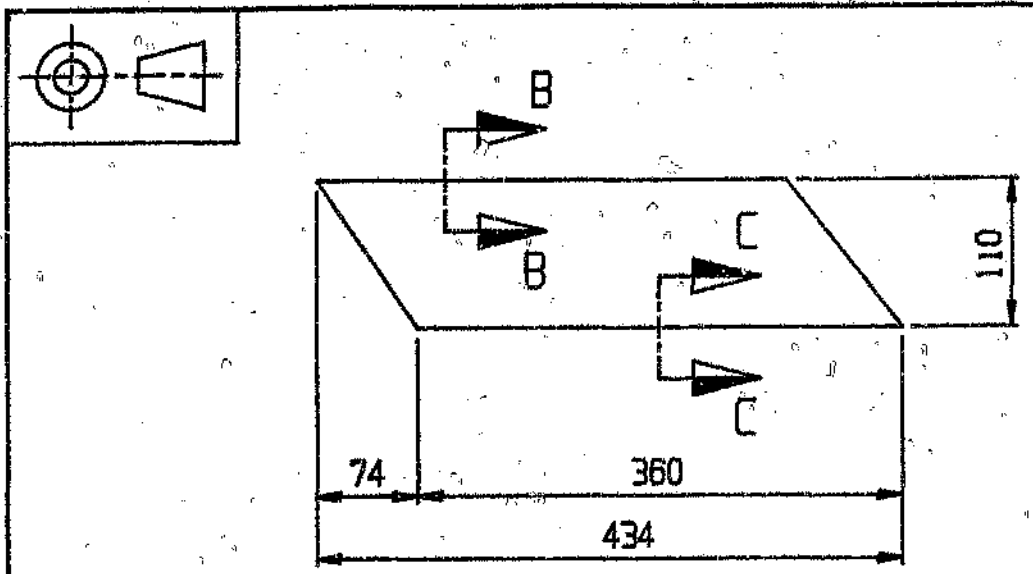

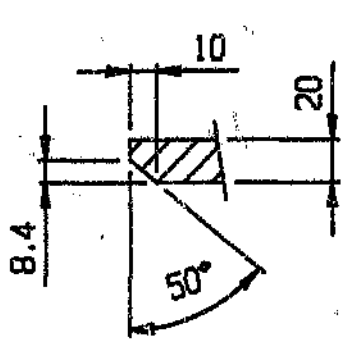

SECTION B-B
(WELD PREPARATION DETAIL)

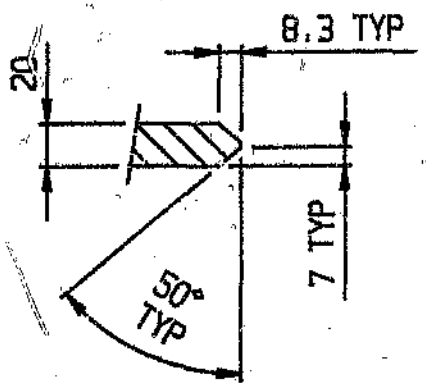

SECTION C-C
(WELD PREPARATION DETAIL)

MATERIAL: 20 mm ALUMINIUM PLATE 434 x 110
B51S - TF ALLOY

NOTE.

1. LH AS SHOWN. RH OPPOSITE.
2. GRIND WELD PREPARATIONS USING NON-CARBORUNDUM GRINDING DISCS.

UWtec	UNIVERSITY OF THE WITWATERSRAND LIGHTWEIGHT ALUMINIUM SEMI-TRAILER PROJECT	
MATERIAL:	TITLE:	DRG. No:
SCALE: 1:5	PLATE	LL-08
DATE: 8-01-84		
DRAWN: M.ELSTON		

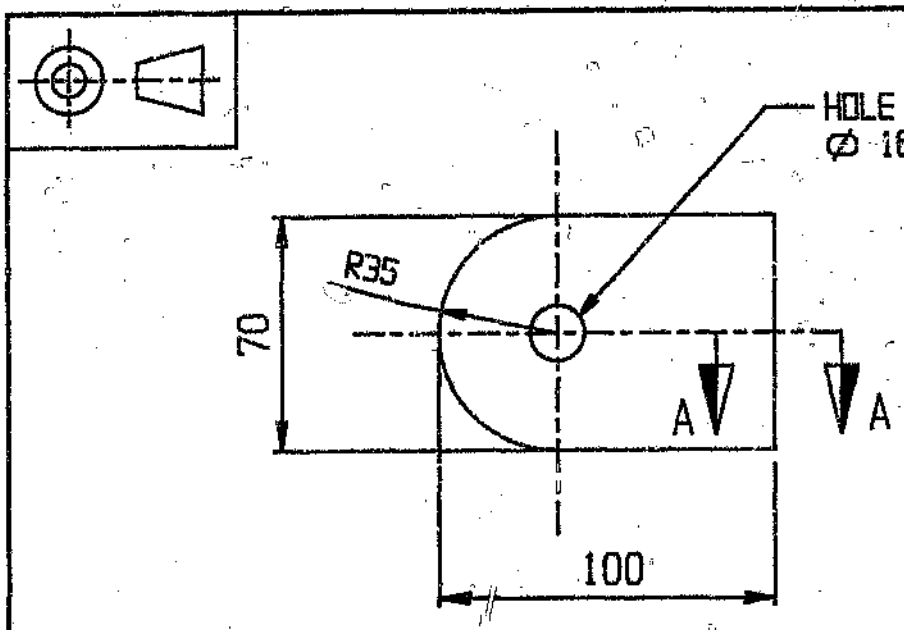

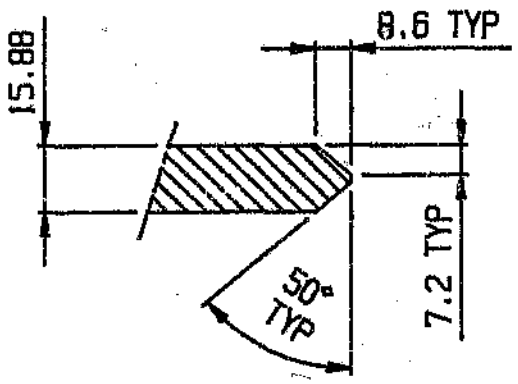

SECTION A-A
(WELD PREPARATION DETAIL)

MATERIAL: 15.88mm ALUMINIUM PLATE 70 x 100
B51S - TF ALLOY

NOTE.

1. GRIND WELD PREPARATIONS USING NON-CARBORUNDUM GRINDING DISCS.

UWtec	UNIVERSITY OF THE WITWATERSRAND		
	LIGHTWEIGHT ALUMINIUM SEMI-TRAILER PROJECT		
MATERIAL:		TITLE:	DRG. No:
SCALE:	1:2	END PLATE	LL-09
DATE:	20-01-84		
DRAWN:	M.ELSTON		

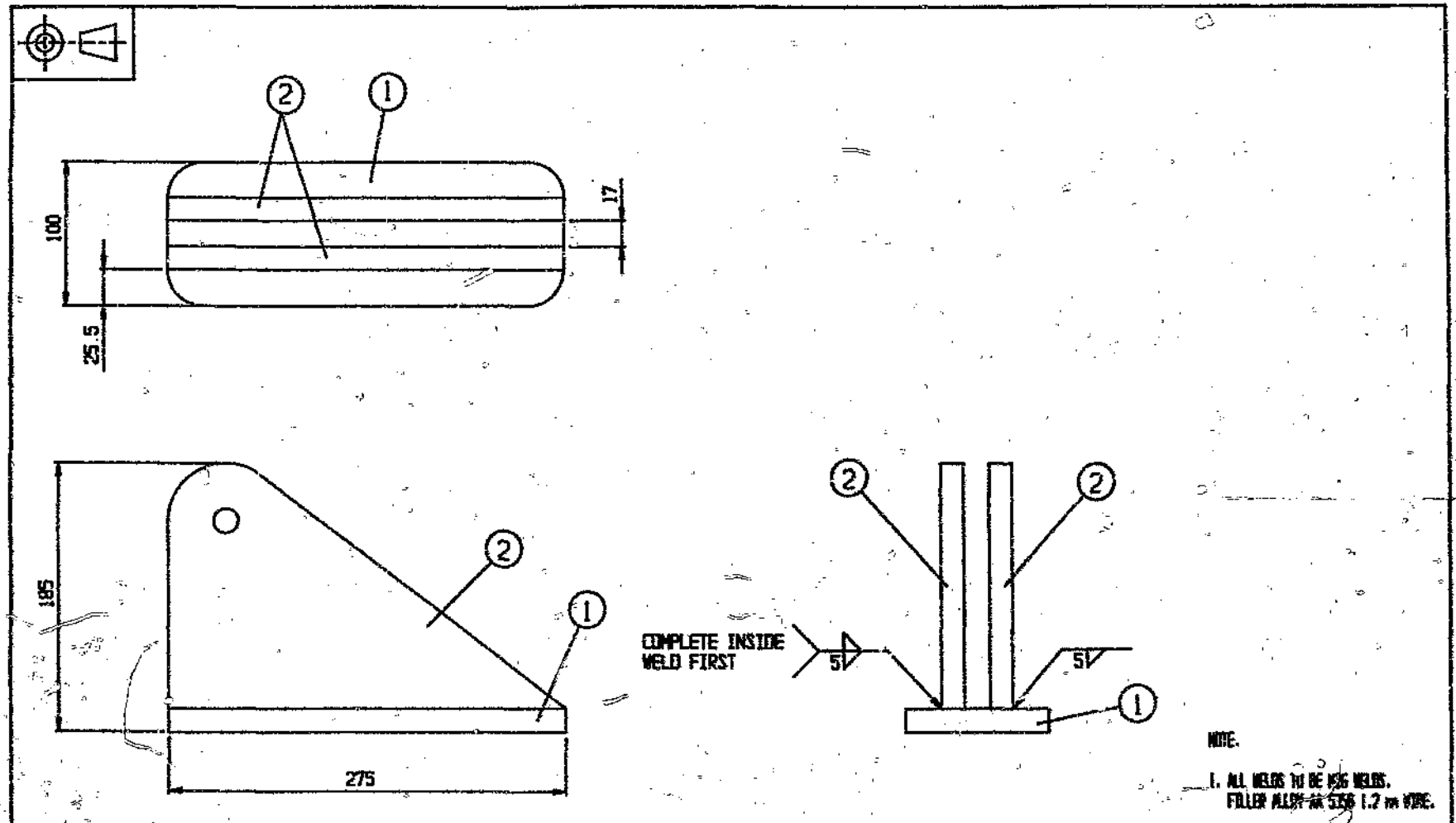

2	BRACKET PLATE	6S1S - TF ALLOY	LL-18	2	UWtec	UNIVERSITY OF THE WITWATERSRAND	
1	PLATE	6S1S - TF ALLOY	LL-17	1		LIGHTWEIGHT ALUMINIUM SEMI-TRAILER PROJECT	
ITEM	DESCRIPTION	MATERIAL	DRG. NUMBER	QTY	MATERIAL:	TITLE:	DRG. No:
					SCALE: 1:2.5	LANDING LEG REARWARD BRACE BRACKET ASSEMBLY	LL-10
					DATE: 15-01-04		
					DRAWN: M.ELSTON		

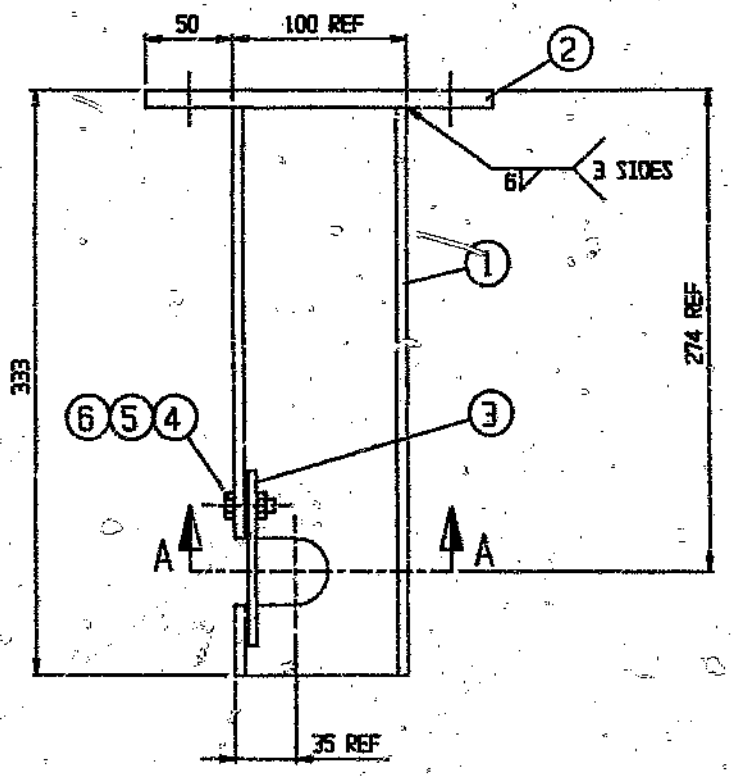

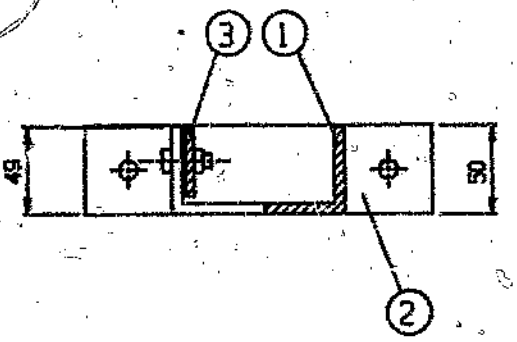

SECTION A-A

NOTE.

1. ALL WELDS TO BE MIG WELDS. FILLER ALLOY AA 5356 1.2 m WIRE.

ITEM	DESCRIPTION	MATERIAL	DRG. NUMBER	QTY
6	NUT	M10 NYLOC NUT (GD 8), ZINC PLATED	-	3
5	WASHER	M10 MS FLAT PREC. WASHER, CADMIUM PLATED	-	3
4	BOLT	M10 x 35 HEX BOLT (GD 8.8), CADMIUM PLATED	-	3
3	STOP PLATE	6543 - HS AL. ALLOY	LL-14	1
2	MOUNTING PLATE	6515 - TF AL. ALLOY	LL-13	1
1	CHANNEL	6063 - T6 AL. ALLOY	LL-12	1

UWtec

UNIVERSITY OF THE WITWATERSRAND

LIGHTWEIGHT ALUMINIUM SEMI-TRAILER PROJECT

MATERIAL:	
SCALE:	1:2.5
DATE:	20-01-94
DRAWN:	H. ELSTON

TITLE: LANDING LEG CRANK BRACKET ASSEMBLY

DRG. No: LL-11

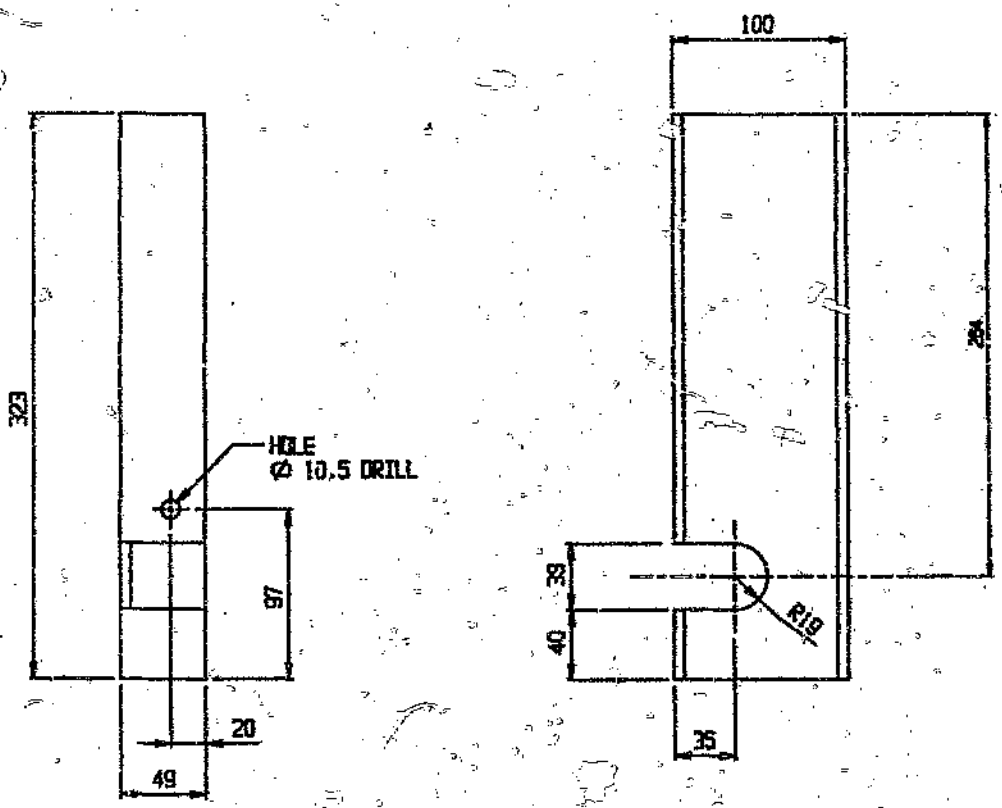

MATERIAL: ALUMINIUM CHANNEL SECTION
100 x 49 x 6 x 323 LG.
CUT FROM EXTRUDED AL. SQUARE TUBE (HULETTS SHAPE No. H2027)
100 x 100 x 6 x
D65S - T6 ALLOY

ITEM	DESCRIPTION	MATERIAL	DRG. NUMBER	QTY

UWtec

UNIVERSITY OF THE WITWATERSRAND
LIGHTWEIGHT ALUMINIUM SEMI-TRAILER PROJECT

MATERIAL:	
SCALE:	1:2.5
DATE:	20-01-84
DRAWN:	H.ELSTON

TITLE: CHANNEL

DRG. No: LL-12

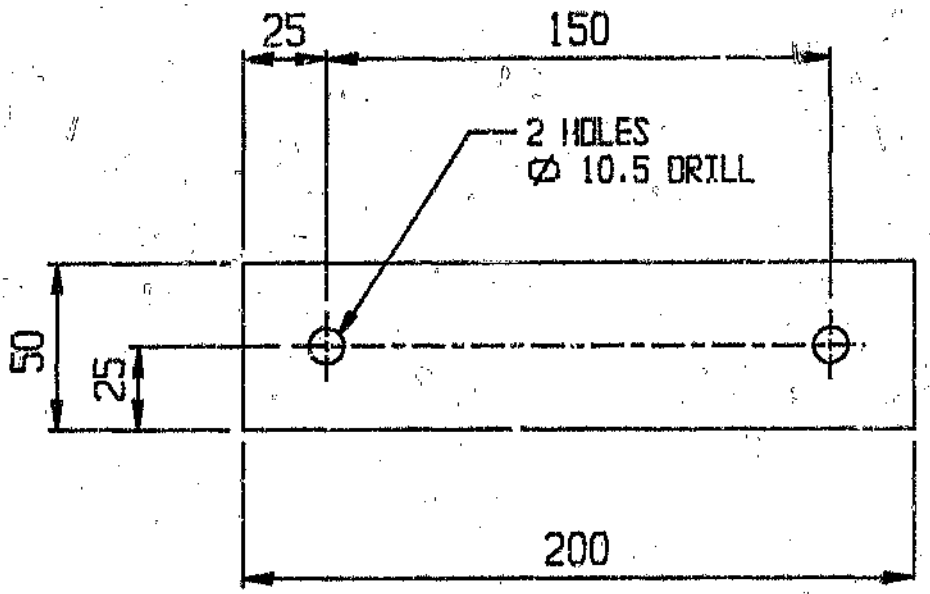

MATERIAL: 10mm ALUMINIUM PLATE 50 x 200
B51S - TF ALLOY

UWtec		UNIVERSITY OF THE WITWATERSRAND	
		LIGHTWEIGHT ALUMINIUM SEMI-TRAILER PROJECT	
MATERIAL:		TITLE:	DRG. No:
SCALE:	1:2	MOUNTING PLATE	LL-13
DATE:	20-01-84		
DRAWN:	M.ELSTON		

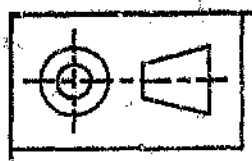

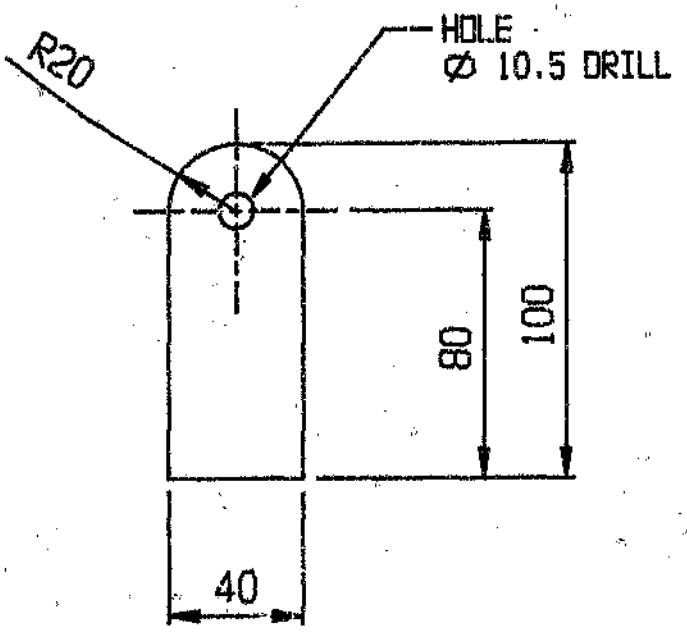

MATERIAL: 4.77mm ALUMINIUM PLATE 40 x 100
D54S - H2 ALLOY

UWtec		UNIVERSITY OF THE WITWATERSRAND LIGHTWEIGHT ALUMINIUM SEMI-TRAILER PROJECT	
MATERIAL:		TITLE:	DRG. No:
SCALE:	1:2	STOP PLATE	LL-14
DATE:	20-01-84		
DRAWN:	M.ELSTON		

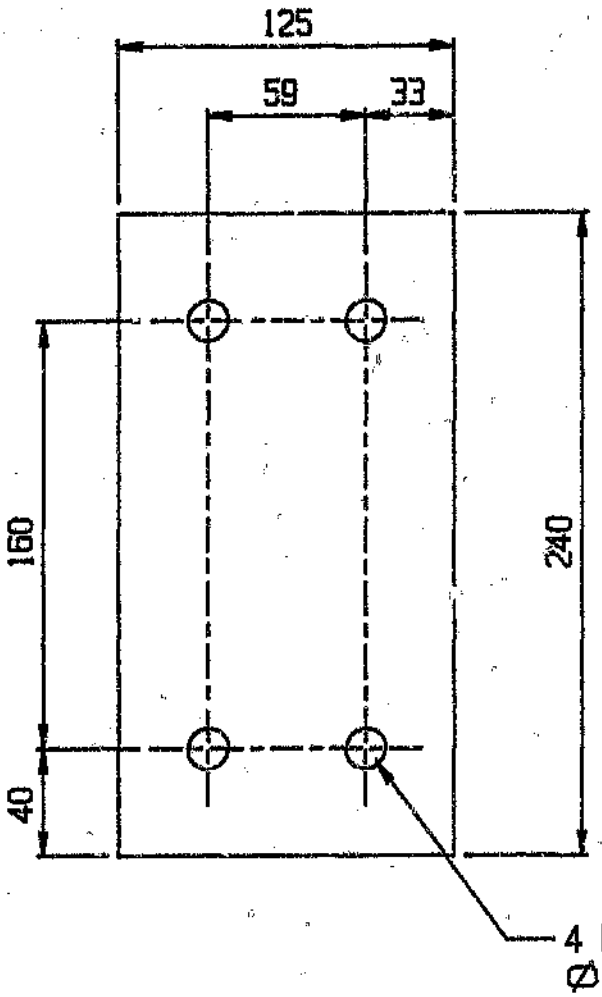

MATERIAL: 15.88mm ALUMINIUM ALLOY PLATE 125 x 240
6151 - TF ALLOY

UWtec		UNIVERSITY OF THE WITWATERSRAND LIGHTWEIGHT ALUMINIUM SEMI-TRAILER PROJECT	
MATERIAL:		TITLE:	DRG. No:
SCALE:	1:2.5	FLANGE	LL-15
DATE:	15-01-84		
DRAWN:	M.ELSTON		

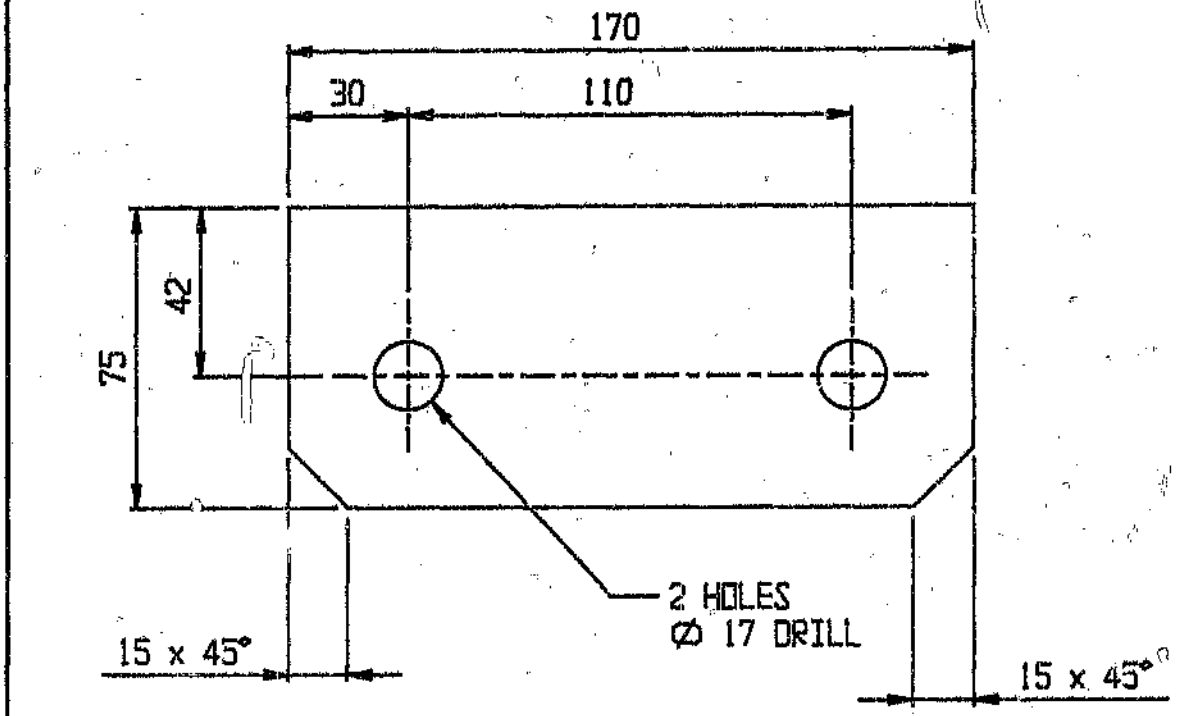

MATERIAL: 15.88mm ALUMINIUM ALLOY PLATE 75 x 170
B51S - TF ALLOY

UWtec		UNIVERSITY OF THE WITWATERSRAND	
		LIGHTWEIGHT ALUMINIUM SEMI-TRAILER PROJECT	
MATERIAL:		TITLE: BRACKET	DRG. No: LL-16
SCALE:	1:2.5		
DATE:	15-01-84		
DRAWN:	M.ELSTON		

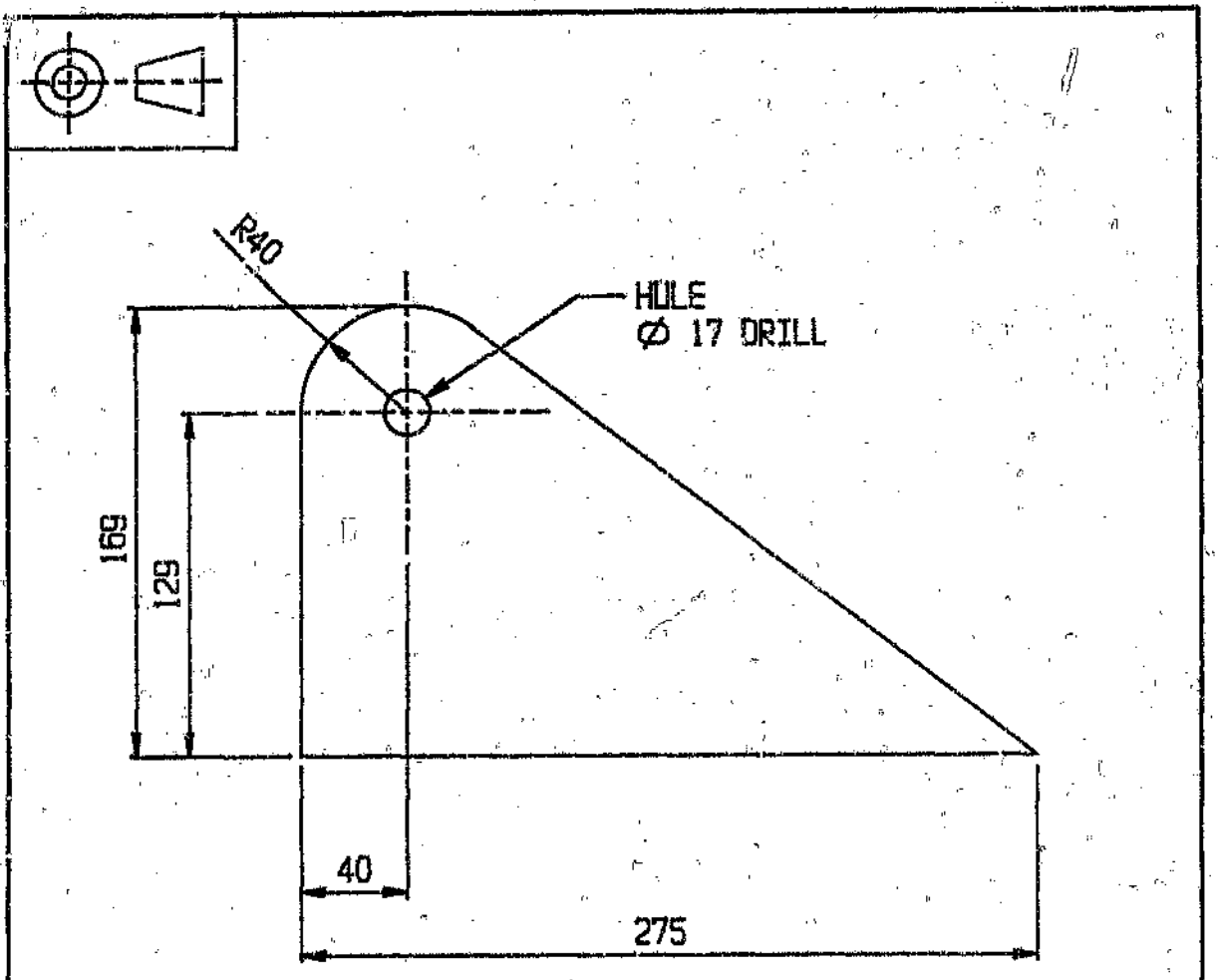

MATERIAL: 15.88mm ALUMINIUM ALLOY PLATE 169 x 275
B51S - TF ALLOY

UWtec		UNIVERSITY OF THE WITWATERSRAND	
		LIGHTWEIGHT ALUMINIUM SEMI-TRAILER PROJECT	
MATERIAL:		TITLE: PLATE	DRG. No: LL-17
SCALE:	1:2.5		
DATE:	15-01-84		
DRAWN:	M.ELSTON		

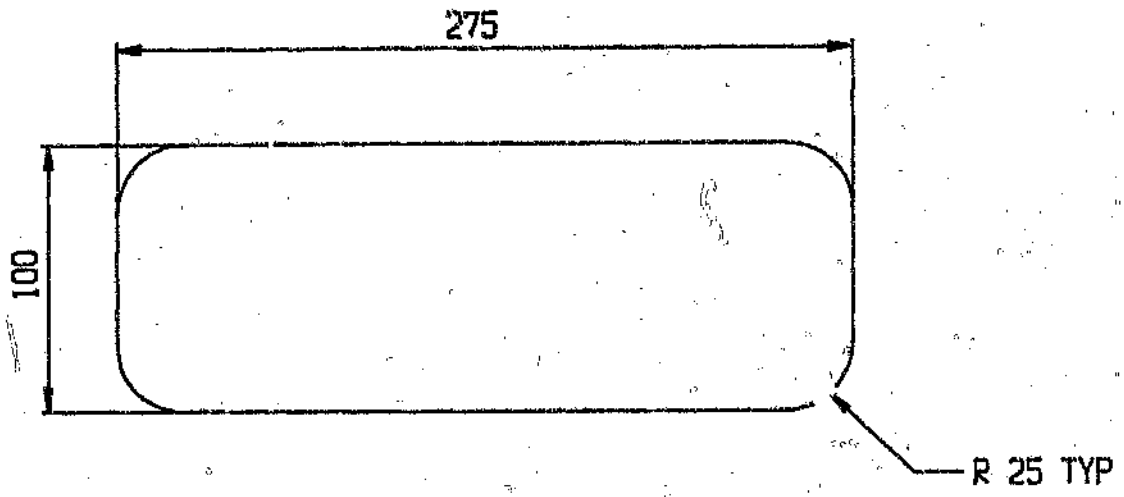

MATERIAL: 15.88mm ALUMINIUM PLATE 100 x 275
85iS - TF ALLOY

UWtec	UNIVERSITY OF THE WITWATERSRAND	
	LIGHTWEIGHT ALUMINIUM SEMI-TRAILER PROJECT	
MATERIAL:	TITLE:	DRG. No:
SCALE: 1:2.5	BRACKET PLATE	LL-18
DATE: 15-01-84		
DRAWN: M.ELSTON		

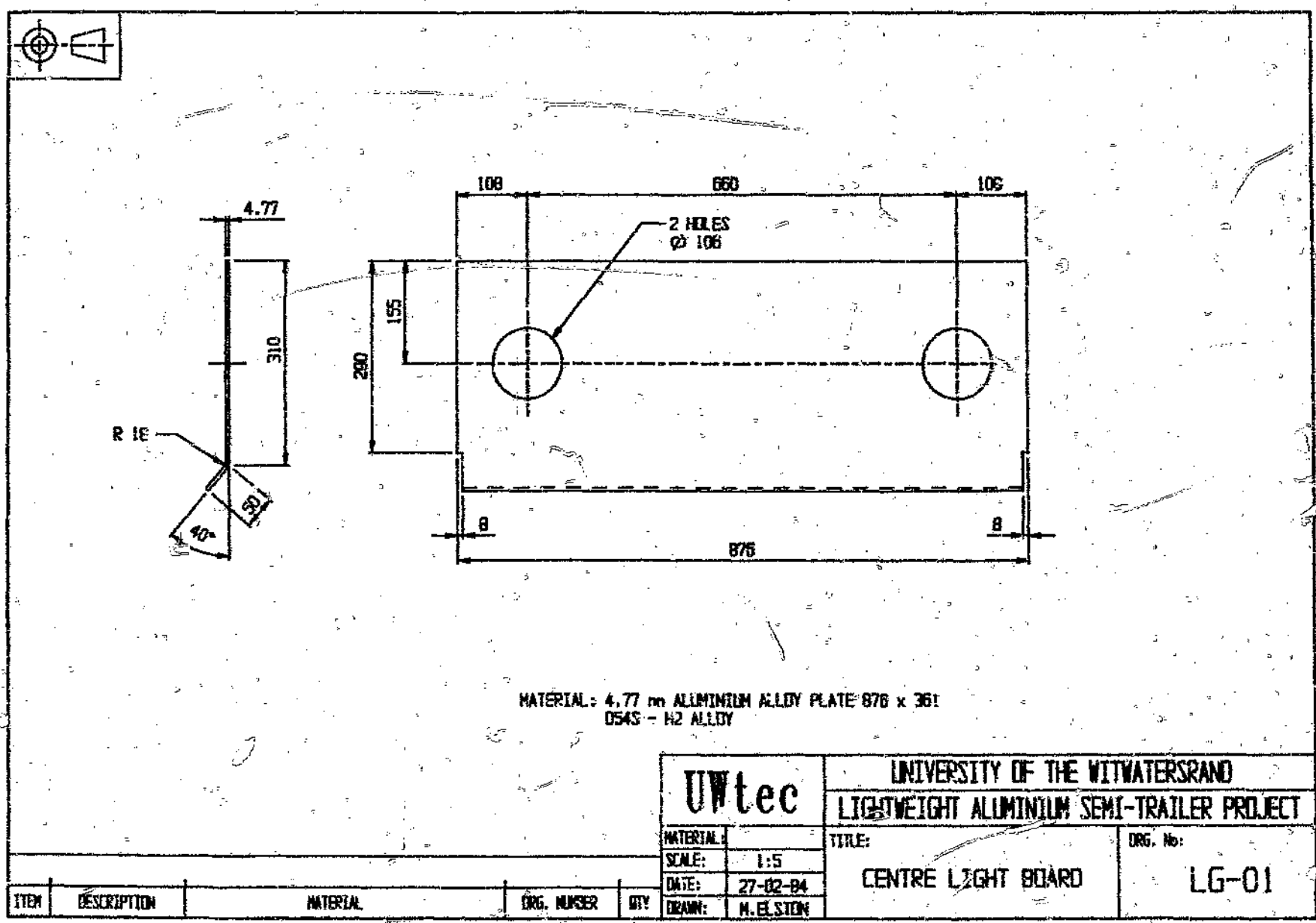

MATERIAL: 4.77 mm ALUMINIUM ALLOY PLATE 876 x 361
0543 - H2 ALLOY

ITEM	DESCRIPTION	MATERIAL	DRG. NUMBER	QTY

UWtec

UNIVERSITY OF THE WITWATERSRAND
LIGHTWEIGHT ALUMINIUM SEMI-TRAILER PROJECT

MATERIAL:	
SCALE:	1:5
DATE:	27-02-84
DRAWN:	M.ELSTON

TITLE: CENTRE LIGHT BOARD

DRG. No: LG-01

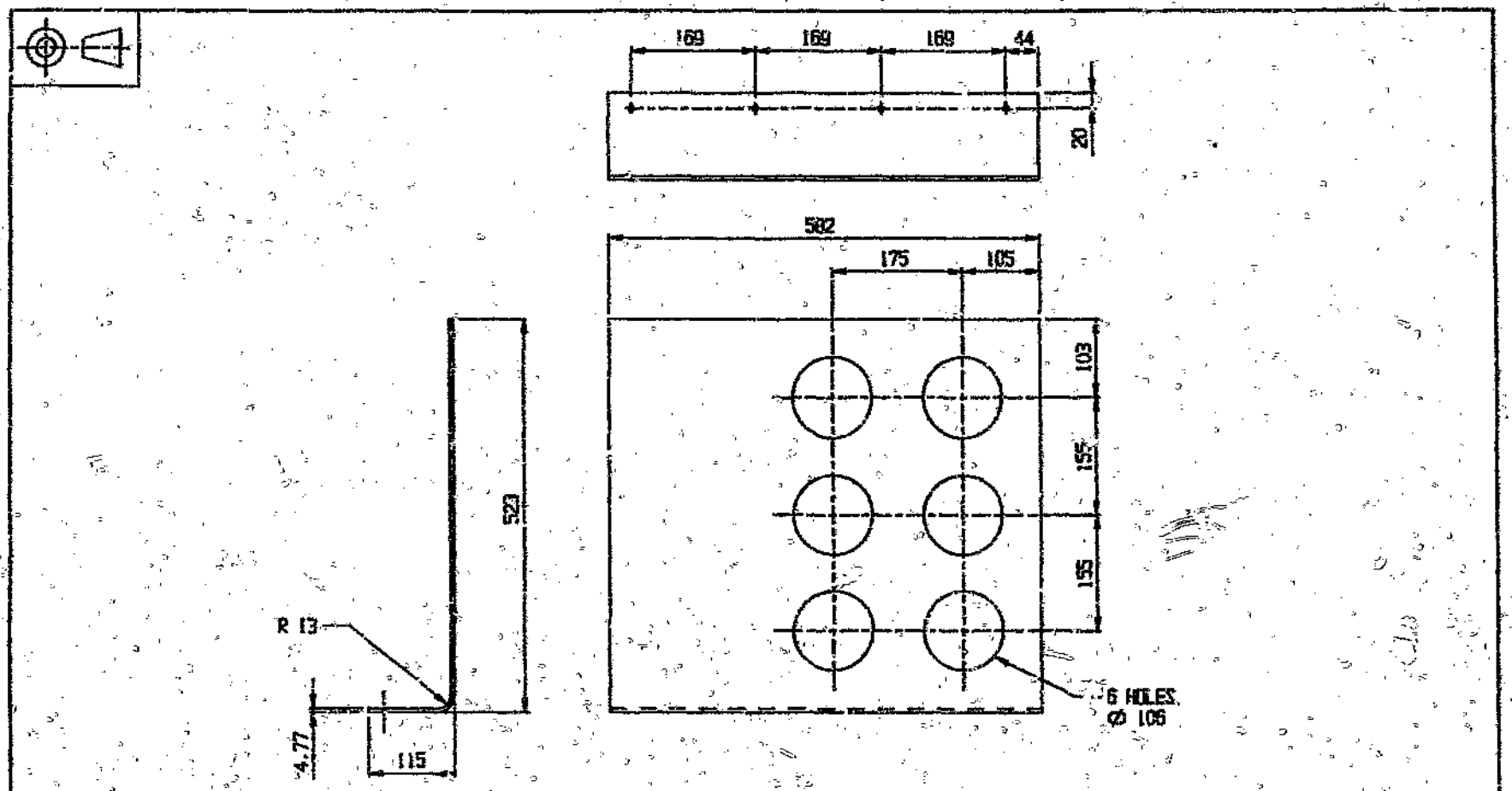

MATERIAL: 4.77 mm ALUMINIUM ALLOY PLATE 630 x 582
5054 - H2 ALLOY

NOTE.
1. RH AS SHOWN & LH OPPOSITE

ITEM	DESCRIPTION	MATERIAL	DRG. NUMBER	QTY

UWtec

MATERIAL:	
SCALE:	1:5
DATE:	27-02-04
DRAWN:	M.ELSTON

UNIVERSITY OF THE WITWATERSRAND
LIGHTWEIGHT ALUMINIUM SEMI-TRAILER PROJECT

TITLE:
REAR PORTION OF
OUTER LIGHT BOARD

DRG. No:
LG-02

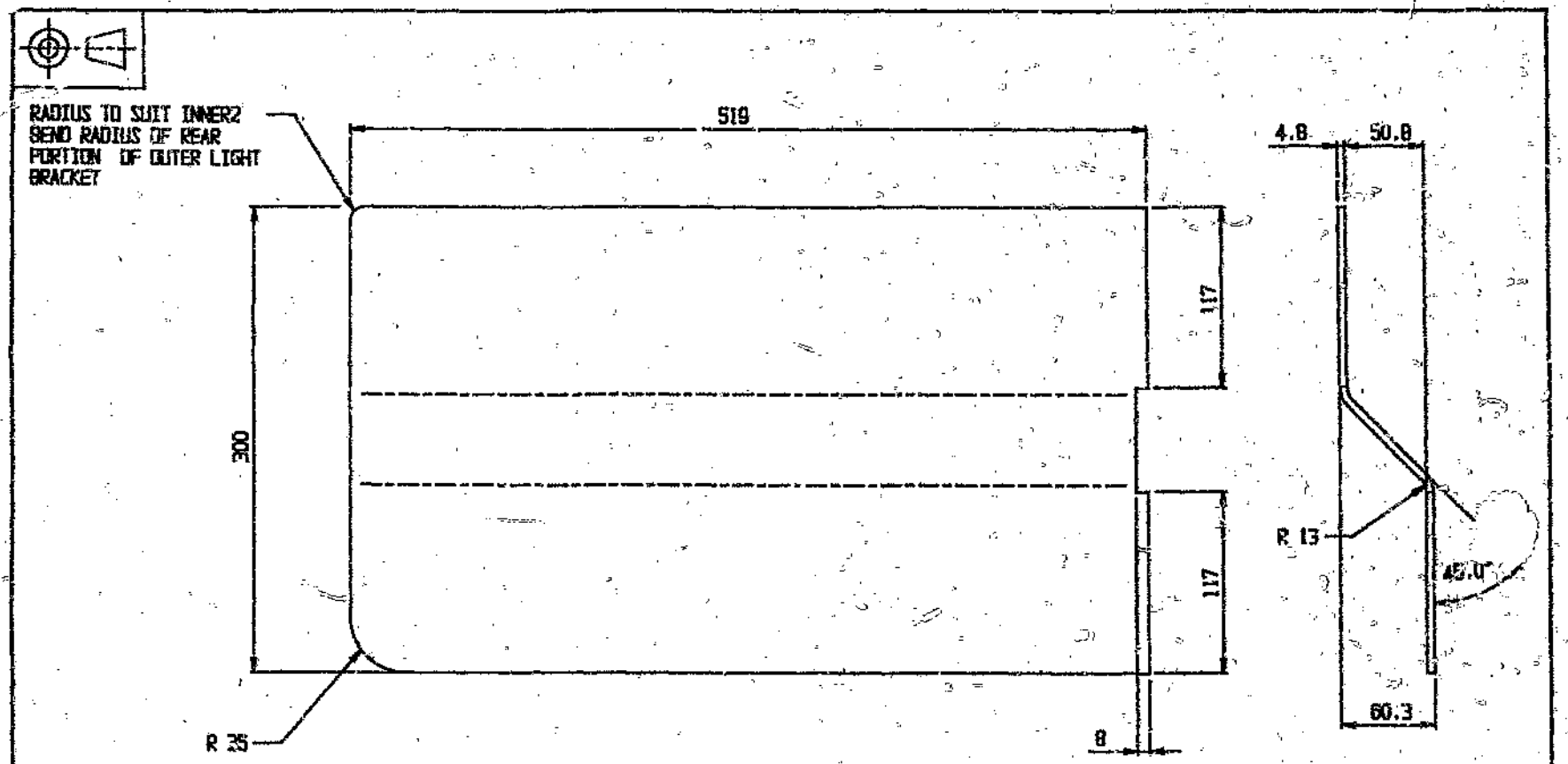

MATERIAL: 4.77 mm ALUMINIUM PLATE 323 x 519
0545 - H2 ALLOY

NOTE:
1. RH AS SHOWN & LH OPPOSITE

ITEM	DESCRIPTION	MATERIAL	DRG. NUMBER	QTY

UWtec

UNIVERSITY OF THE WITWATERSRAND
LIGHTWEIGHT ALUMINIUM SEMI-TRAILER PROJECT

MATERIAL:	
SCALE:	1:2.5
DATE:	26-02-84
DRAWN:	M.ELSTON

TITLE: SIDE PORTION OF OUTER LIGHT BOARD

DRG. No: LG-03

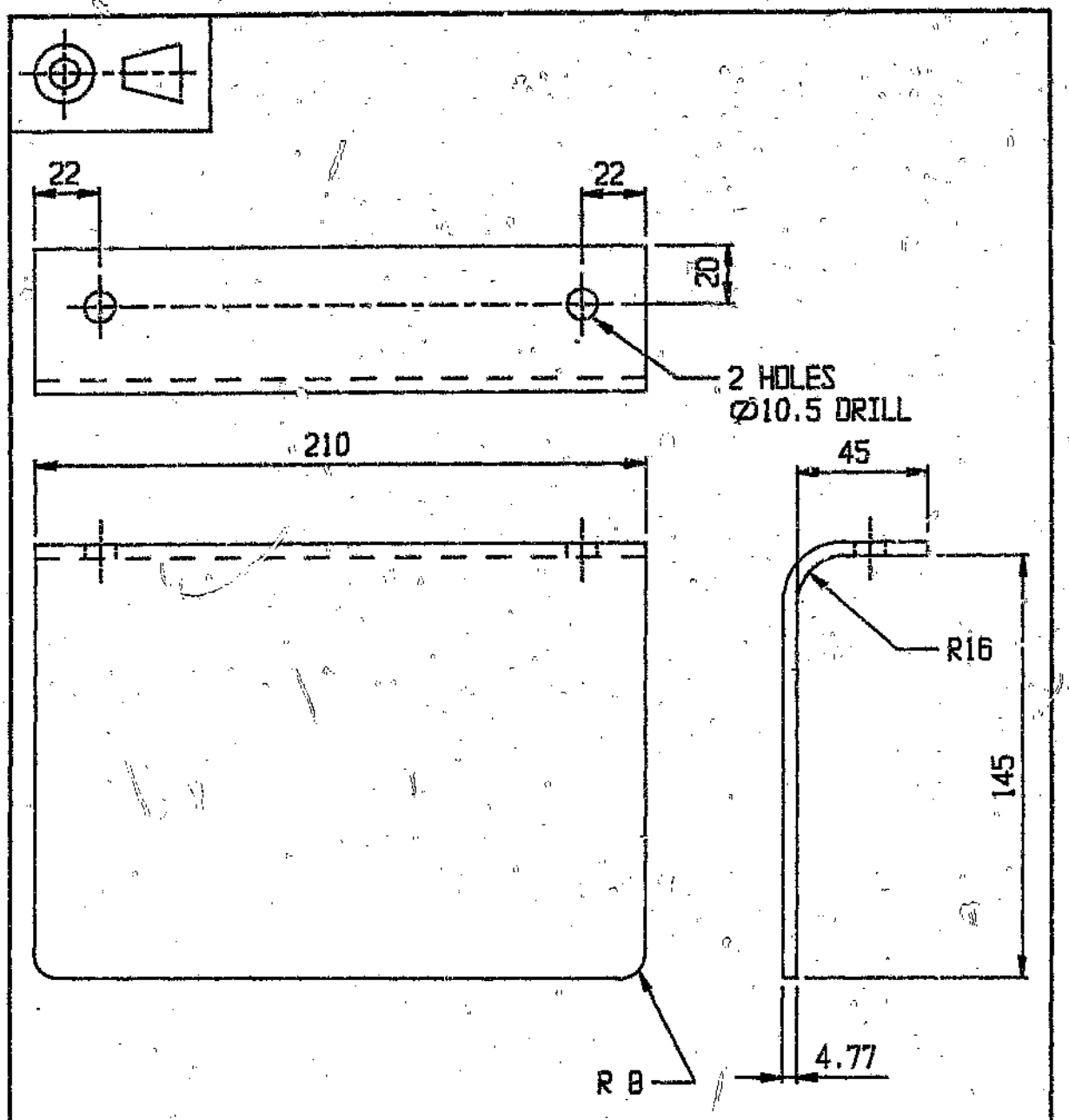

MATERIAL: 4.77mm ALUMINIUM ALLOY PLATE 184 x 210
D54S-H2 ALLOY

UWtec	UNIVERSITY OF THE WITWATERSRAND		
	LIGHTWEIGHT ALUMINIUM SEMI-TRAILER PROJECT		
MATERIAL:		TITLE:	DRG. No:
SCALE:	1:2	FOREMOST SIDE MARKER LIGHT BRRACKET	LG-04
DATE:	28-10-83		
DRAWN:	M.ELSTON		

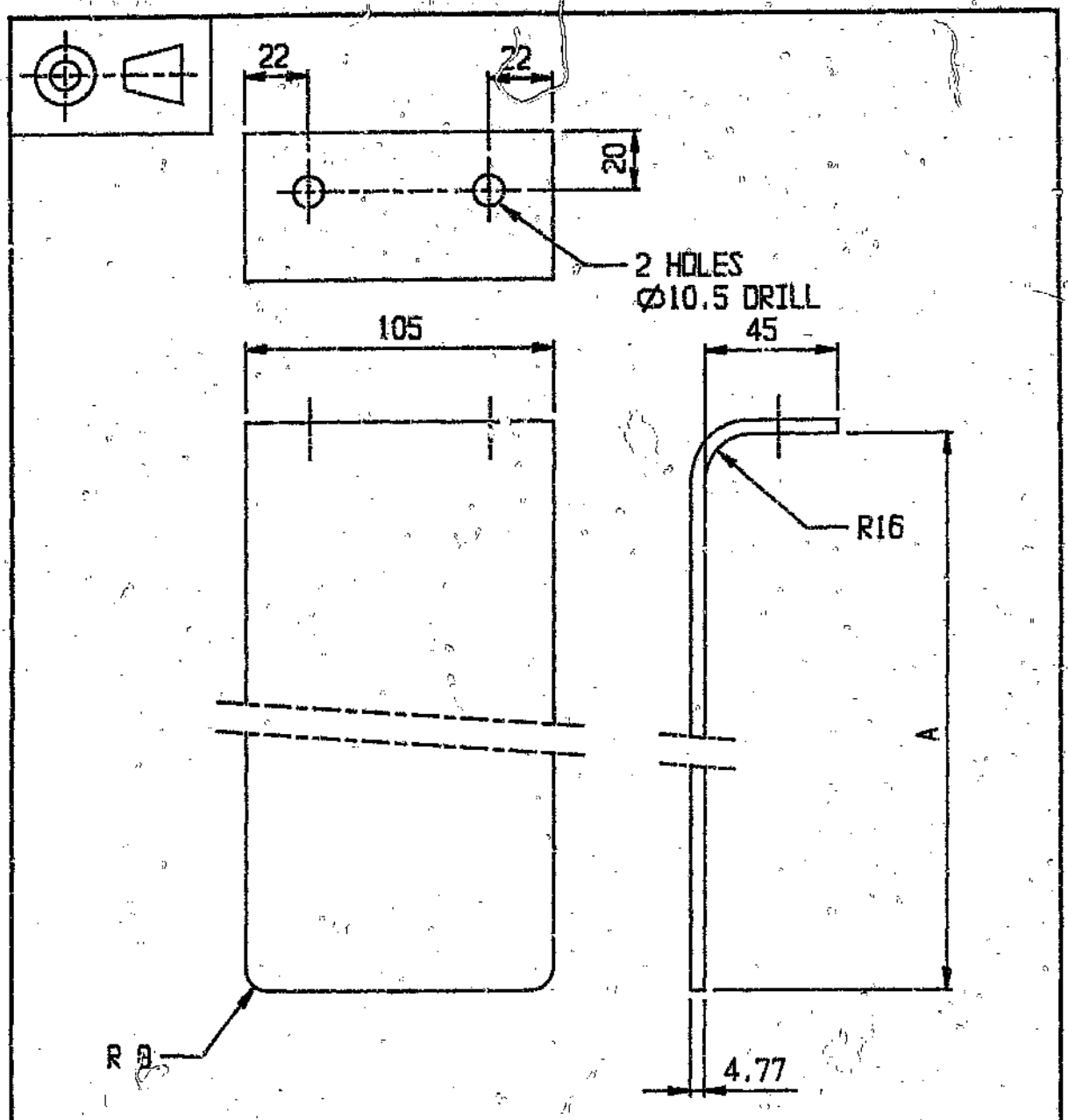

MATERIAL: 4.77mm ALUMINIUM ALLOY PLATE 105 x B
D54S-H2 ALLOY

26[illegible]	230	LG-05-02
604	365	LG-05-01
B	A	OPTION No.

UWtec

UNIVERSITY OF THE WITWATERSRAND

LIGHTWEIGHT ALUMINIUM SEMI-TRAILER PROJECT

MATERIAL:	
SCALE:	1:2
DATE:	28-10-83
DRAWN:	M.ELSTON

TITLE:

SIDE MARKER
LIGHT BRACKET

DRG. No:

LG-05

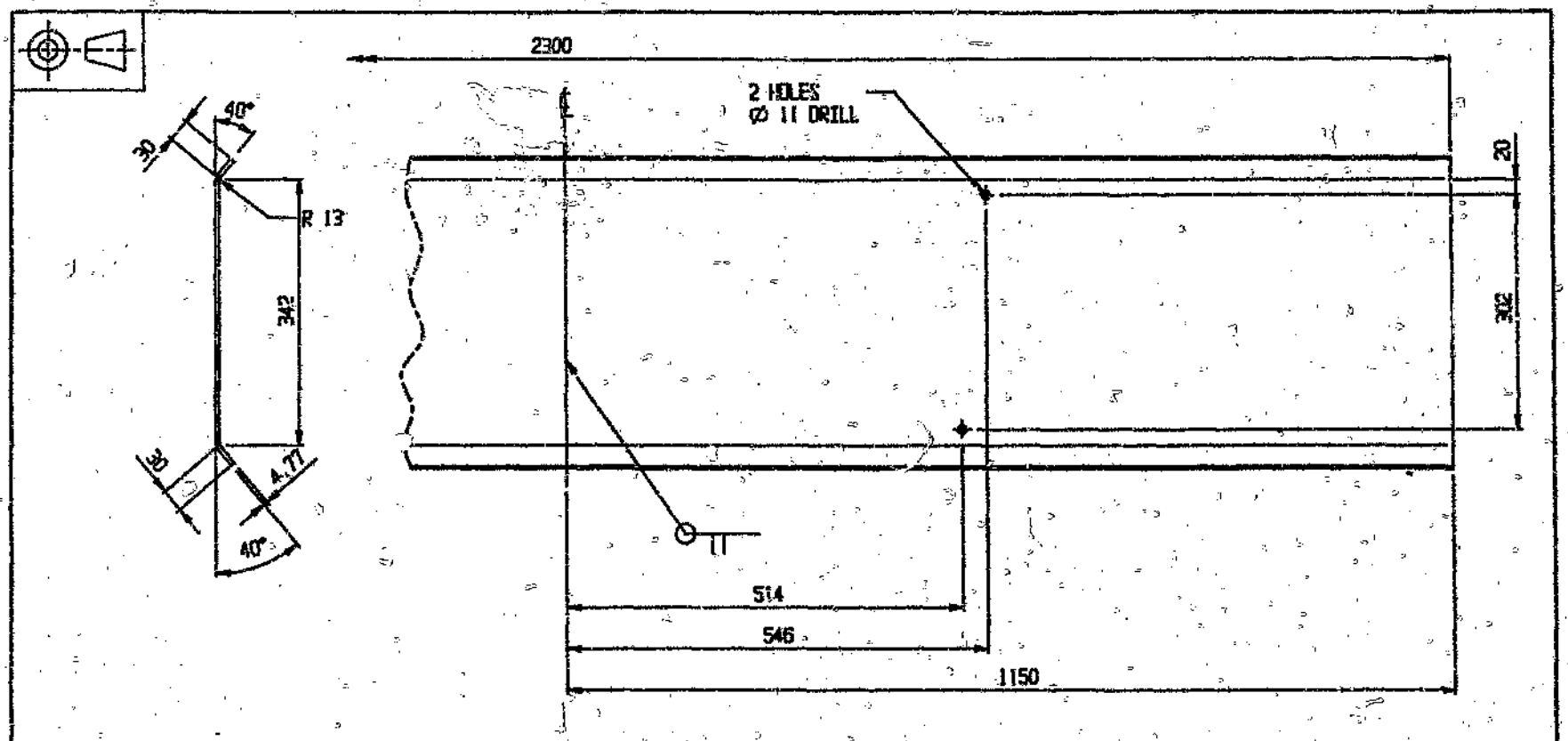

MATERIAL: 4.77 mm ALUMINIUM ALLOY PLATE 402 x 1150
D54S - H2 ALLOY

NOTE.

1. MANUFACTURED FROM TWO PLATES 402 x 1150 SEAM WELDED TOGETHER AS INDICATED.

ITEM	DESCRIPTION	MATERIAL	DRG. NUMBER	QTY

UWtec

UNIVERSITY OF THE WITWATERSRAND
LIGHTWEIGHT ALUMINIUM SEMI-TRAILER PROJECT

MATERIAL:	
SCALE:	1:5
DATE:	26-02-84
DRAWN:	M.ELSTON

TITLE: CHEVRON BOARD

DRG. LG-06

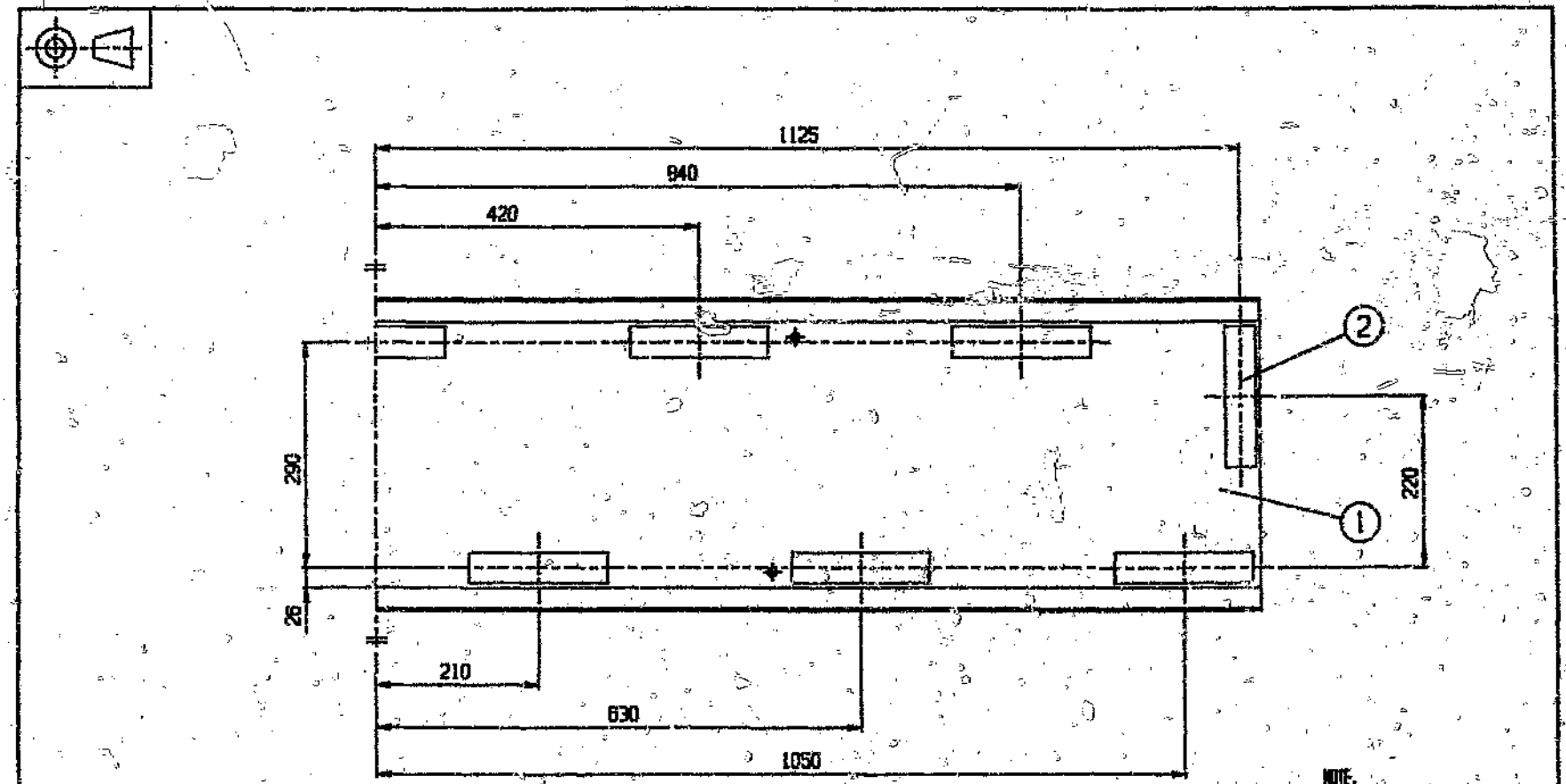

NOTE.

1. RETRO REFLECTORS AFFIXED TO CHEVRON BOARD BY MEANS OF DOUBLE SIDED TAPE

ITEM	DESCRIPTION	MATERIAL	DRG. NUMBER	QTY
3	SET SCREW	M10 x 25 HEX SET SCREW (GD 8.8) CADMIUM PLATED		4
2	RED RETRO REFLECTORS	6515 - TF ALLOY	HELLA RA 0450R	13
1	CHEVRON BOARD	5045 - H2	LG-04	1

UWtec

UNIVERSITY OF THE WITWATERSRAND

LIGHTWEIGHT ALUMINIUM SEMI-TRAILER PROJECT

MATERIAL:	
SCALE:	1:5
DATE:	27-02-04
DRAWN:	M. ELSTON

TITLE: CHEVRON BOARD ASSEMBLY

DRG. NO: LG-07

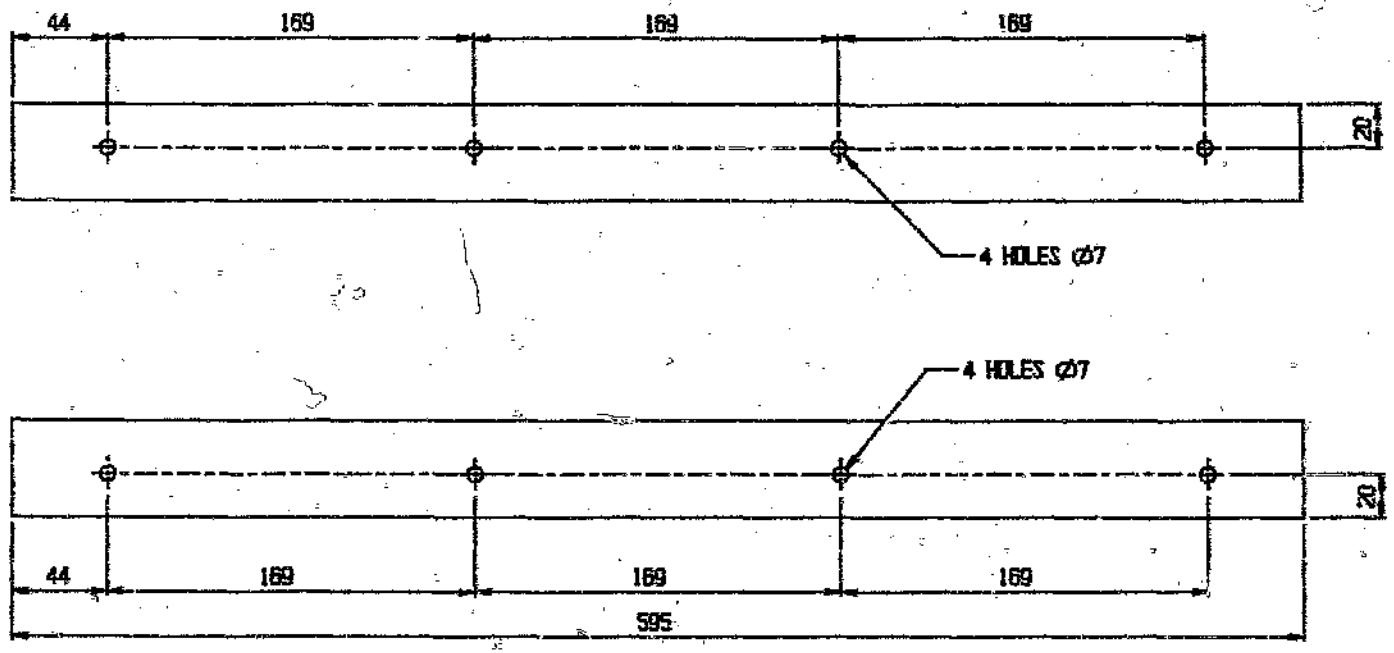

MATERIAL: EXTRUDED ALUMINIUM ANGLE SECTION
44.5 x 44.5 x 4.76 x 595 LG
CUT FROM HULETTS SHAPE No. 15442
DESS - TF ALLOY

ITEM	DESCRIPTION	MATERIAL	DRG. NUMBER	QTY

UWtec

UNIVERSITY OF THE WITWATERSRAND
LIGHTWEIGHT ALUMINIUM SEMI-TRAILER PROJECT

MATERIAL:	
SCALE:	1:2
DATE:	25-11-03
DRAWN:	M.ELSTON

TITLE:
MOUNTING BRACKET
FOR MUD FLAPS

DRG. No:
LG-08

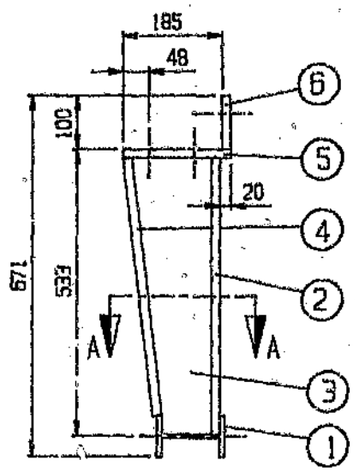

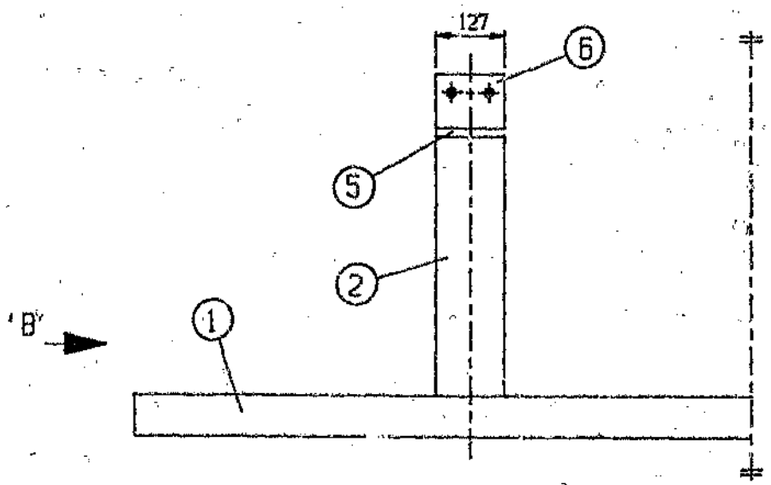

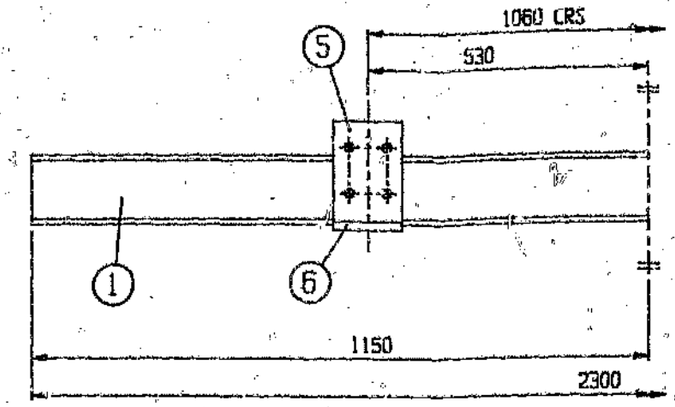

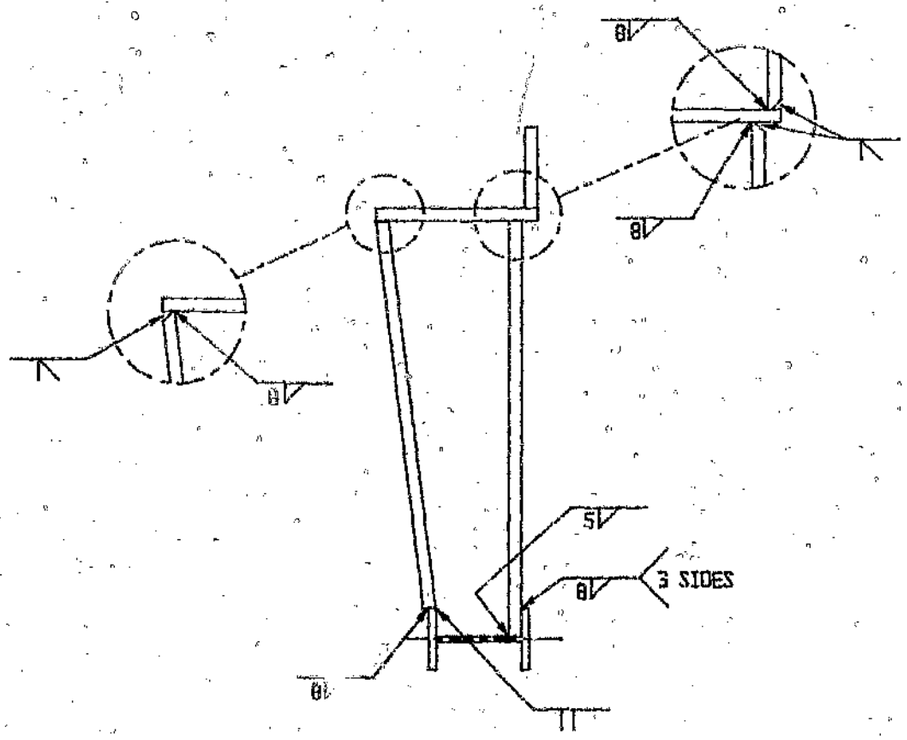

VIEW ON ARROW B
(SCALE 1:5)

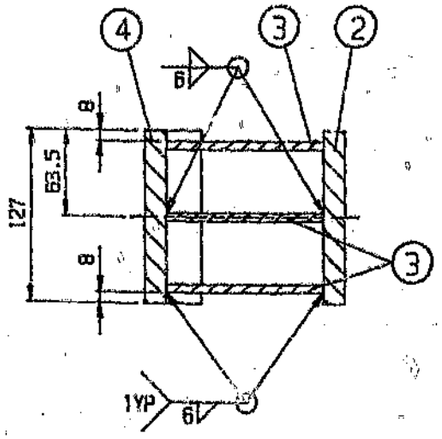

SECTION A-A
(SCALE 1:3)

ITEM	DESCRIPTION	MATERIAL	DRG. NUMBER	QTY
9	WASHER	M16 MS FLAT PREC. WASHER, CADMIUM PLATED	-	12
8	NUT	M16 CLEVELOC NUT (GD 8), CADMIUM PLATED	-	12
7	BOLT	M16 x 65 HEX BOLT (GD 8.8), CADMIUM PLATED	-	12
6	MOUNTING FLANGE	D6S5 - TF AL. ALLOY	RB-05	2
5	MOUNTING FLANGE	D6S5 - TF AL. ALLOY	RB-02	2
4	UPRIGHT FLANGE	D6S5 - TF AL. ALLOY	RB-04	2
3	WEB PLATE	D54S - H2 AL. ALLOY	RB-06	6
2	UPRIGHT FLANGE	D6S5 - TF AL. ALLOY	RB-03	2
1	BUMPER BAR	EXTRUDED AL. I-SECTION 78.2 x 127 x 2300 LG HULETTS SHAPE No. 17099 / D6S5 - TF ALLOY	-	1

NOTE.

1. ALL WELDS TO BE MIG WELDS. FILLER ALLOY AA 5356 1.2mm WIRE.

UWtec		UNIVERSITY OF THE WITWATERSRAND	
		LIGHTWEIGHT ALUMINIUM SEMI-TRAILER PROJECT	
MATERIAL:		TITLE:	DRG. No:
SCALE:	1:7.5	REAR BUMPER ASSEMBLY	RB-01
DATE:	9-10-03		
DRAWN:	M.ELSTON		

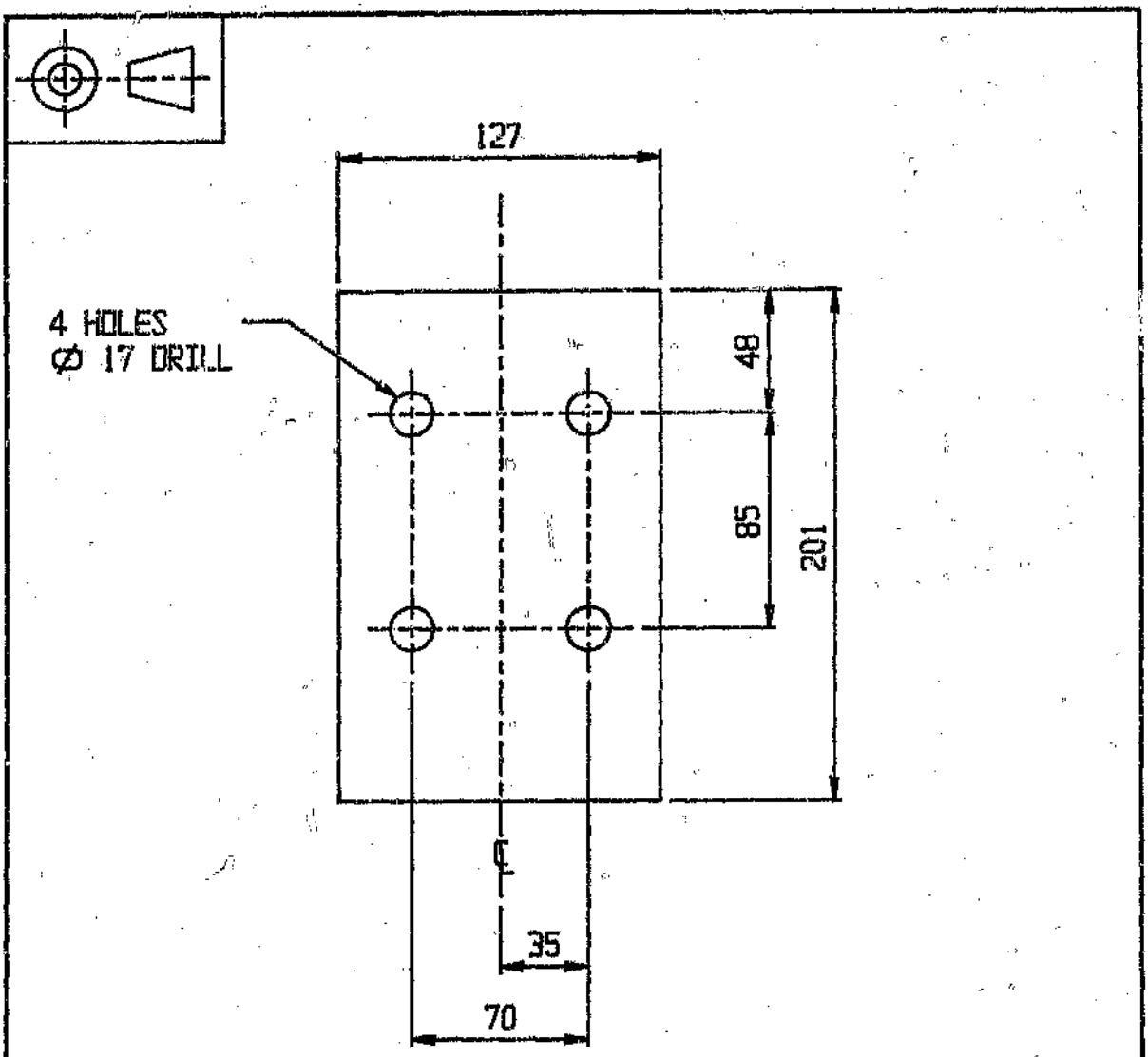

MATERIAL: EXTRUDED ALUMINIUM FLAT BAR
15.88 x 127 x 201 LG.
HULETTS SHAPE No. 10216 (TYPE 1 FLAT BAR)
D65S - TF ALLOY

UWtec	UNIVERSITY OF THE WITWATERSRAND	
	LIGHTWEIGHT ALUMINIUM SEMI-TRAILER PROJECT	
MATERIAL:	TITLE:	DRG. No:
SCALE: 1:2.5	MOUNTING FLANGE	RB-02
DATE: 10-11-83		
DRAWN: M.ELSTON		

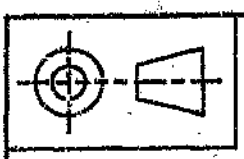

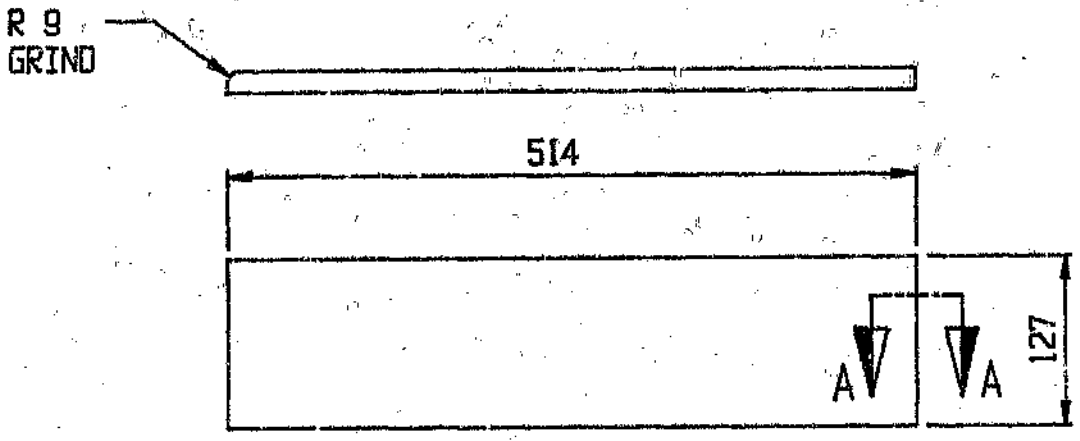

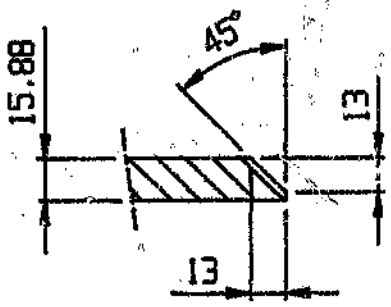

SECTION A-A
(WELD PREPARATION DETAIL)

MATERIAL: EXTRUDED ALUMINIUM FLAT BAR
15.88 x 514 x 127 LG.
HULETTS SHAPE No. 10216 (TYPE 1 FLAT BAR)
D65S - TF ALLOY

NOTE.

1. GRIND WELD PREPARATION USING NON-CARBORUNDUM GRINDING DISCS.

UWtec		UNIVERSITY OF THE WITWATERSRAND LIGHTWEIGHT ALUMINIUM SEMI-TRAILER PROJECT	
MATERIAL:		TITLE:	DRG. No:
SCALE:	1:5	UPRIGHT FLANGE	RB-03
DATE:	10-11-83		
DRAWN:	M.ELSTON		

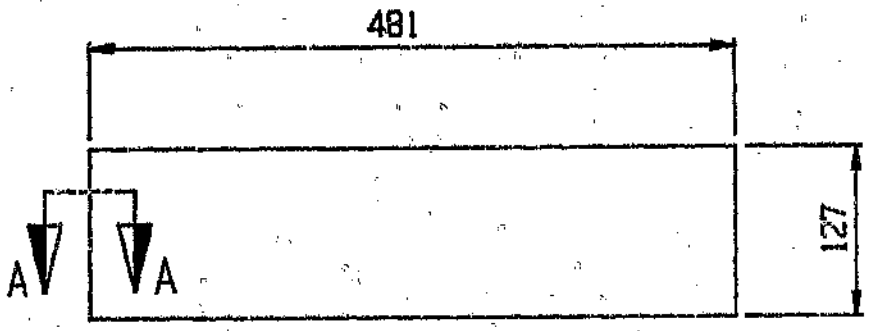

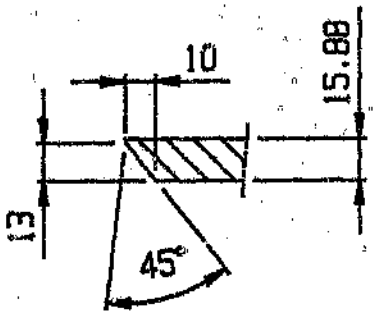

SECTION A-A
(WELD PREPARATION DETAIL)

MATERIAL: EXTRUDED ALUMINIUM FLAT BAR
15.88 x 127 x 481 LG.
HULETTS SHAPE No. 10216 (TYPE 1 FLAT BAR)
D65S - TF ALLOY

NOTE.

1. GRIND WELD PREPARATION USING NON-CARBORUNDUM GRINDING DISCS.

UWtec		UNIVERSITY OF THE WITWATERSRAND LIGHTWEIGHT ALUMINIUM SEMI-TRAILER PROJECT	
MATERIAL:		TITLE:	DRG. No:
SCALE:	1:5	UPRIGHT FLANGE	RB-04
DATE:	10-11-83		
DRAWN:	M.ELSTON		

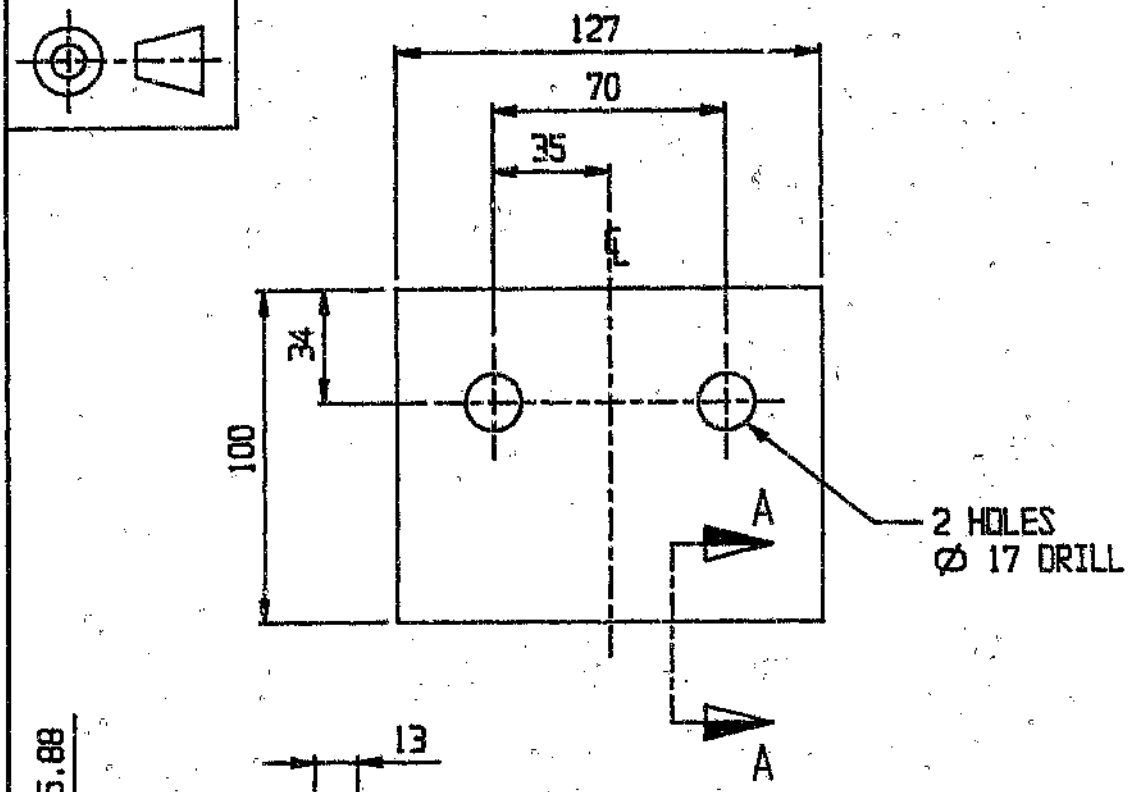

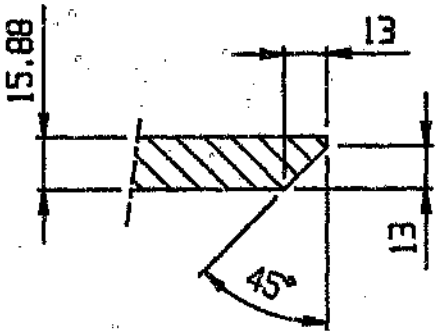

SECTION A-A
(WELD PREPARATION DETAIL)

NOTE.

1. GRIND WELD PREPARATION USING NON-CARBORUNDUM GRINDING DISCS.

MATERIAL: EXTRUDED ALUMINIUM FLAT BAR
15.88 x 100 x 127 LG.
HULETTS SHAPE No. 10216 (TYPE 1 FLAT BAR)
D65S - TF ALLOY

UWtec	UNIVERSITY OF THE WITWATERSRAND		
	LIGHTWEIGHT ALUMINIUM SEMI-TRAILER PROJECT		
MATERIAL:		TITLE:	DRG. No:
SCALE:	1:2	MOUNTING FLANGE	RB-05
DATE:	10-11-83		
DRAWN:	M.ELSTON		

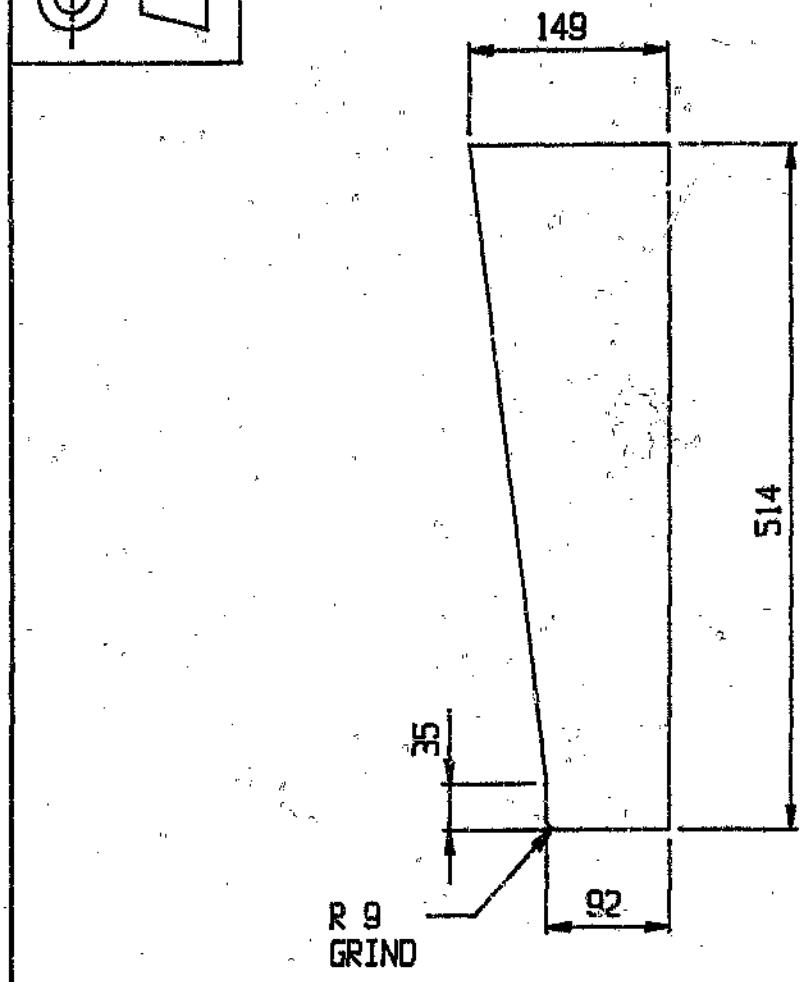

MATERIAL: 6mm ALUMINIUM ALLOY PLATE 149 x 514
D54S - H2 ALLOY

NOTE.

1. GRIND CORNER USING NON-CARBORUNDUM GRINDING DISCS.

UWtec		UNIVERSITY OF THE WITWATERSRAND	
		LIGHTWEIGHT ALUMINIUM SEMI-TRAILER PROJECT	
MATERIAL:		TITLE:	DRG. No:
SCALE:	1:5	WEB PLATE	RB-06
DATE:	10-11-83		
DRAWN:	M.ELSTON		

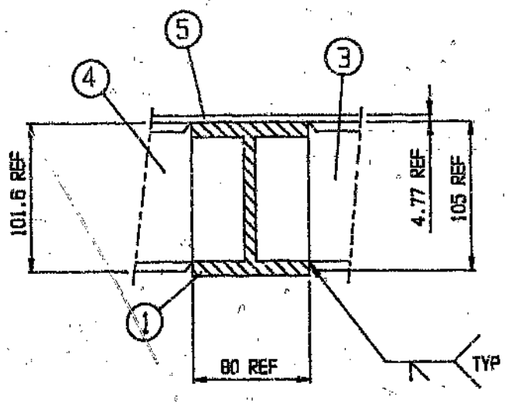

SECTION B-B
(TYP. UPRIGHT TO CHANNEL WELDING DETAIL)
(SCALE 1:2.5)

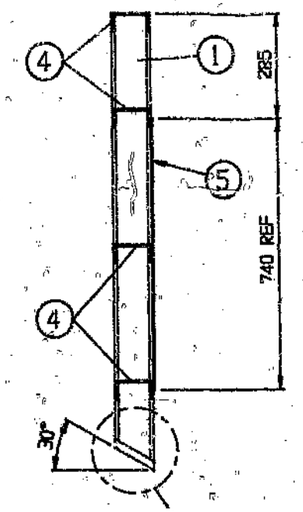

SECTION A-A

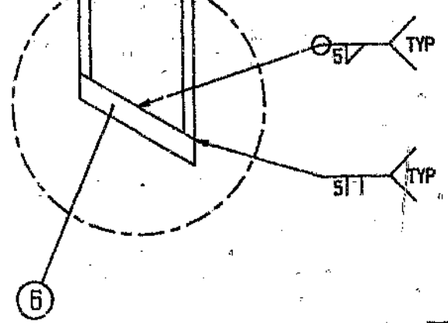

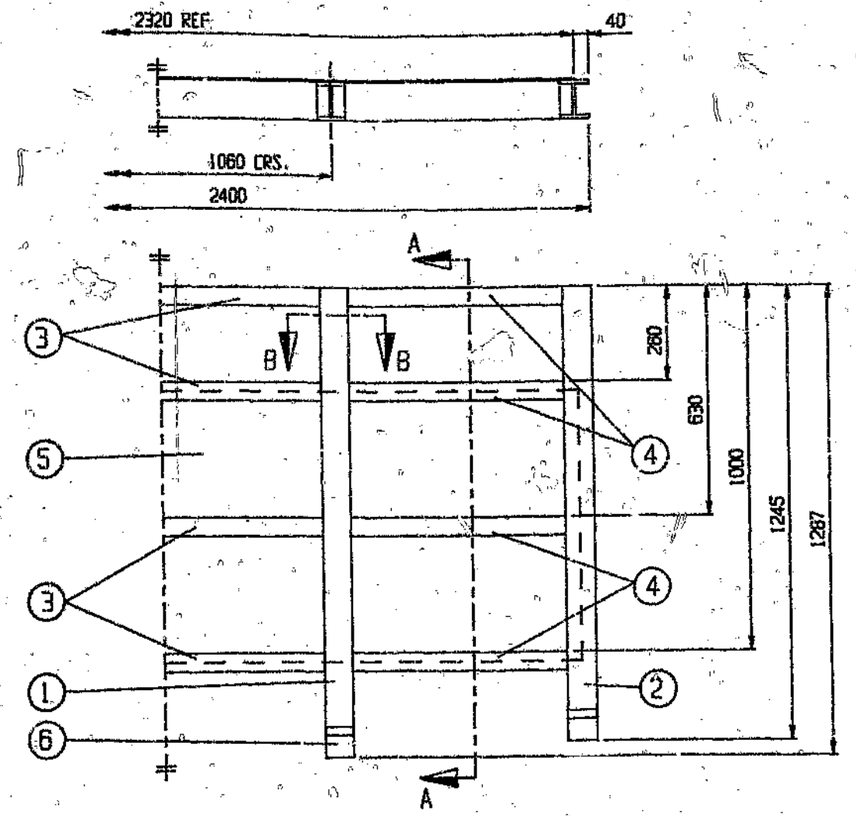

FRONT VIEW

ITEM	DESCRIPTION	MATERIAL	DRG. NUMBER	QTY
9	WASHER	M16 FLAT PREC. WASHER, CADMIUM PLATED	-	12
8	NUT	M16 CLEVELOC NUT (GD 8), CADMIUM PLATED	-	12
7	BOLT	M16 x 55 HEX BOLT (GD 8.8), CADMIUM PLATED	-	12
6	SKID PAD	B51S - TF AL. ALLOY	HB-06	4
5	PLATE	4.77 mm ALUMINIUM PLATE 2320 x 740 / 5083 - H2 ALLOY	-	1
4	CHANNEL	D65S - TF AL. ALLOY	HB-03-02	8
3	CHANNEL	D65S - TF AL. ALLOY	HB-03-01	4
2	OUTER UPRIGHT	D65S - TF AL. ALLOY	HB-05	1 LH 1 RH
1	INNER UPRIGHT	D65S - TF AL. ALLOY	HB-04	2

NOTE.

1. REFER DRG. No. HB-J2 FOR WELDING DETAIL OF 4.77mm PLATE TO FRAME.
2. ALL WELDS TO BE MIG WELDS. AA 5356 FILLER ALLOY 1.2mm WIRE.

UWtec	UNIVERSITY OF THE WITWATERSRAND	
	LIGHTWEIGHT ALUMINIUM SEMI-TRAILER PROJECT	
MATERIAL:	TITLE:	DRG. No:
SCALE: 1:10	HEADBOARD ASSEMBLY	HB-01
DATE: 30-10-03		
DRAWN: M. ELSTON		

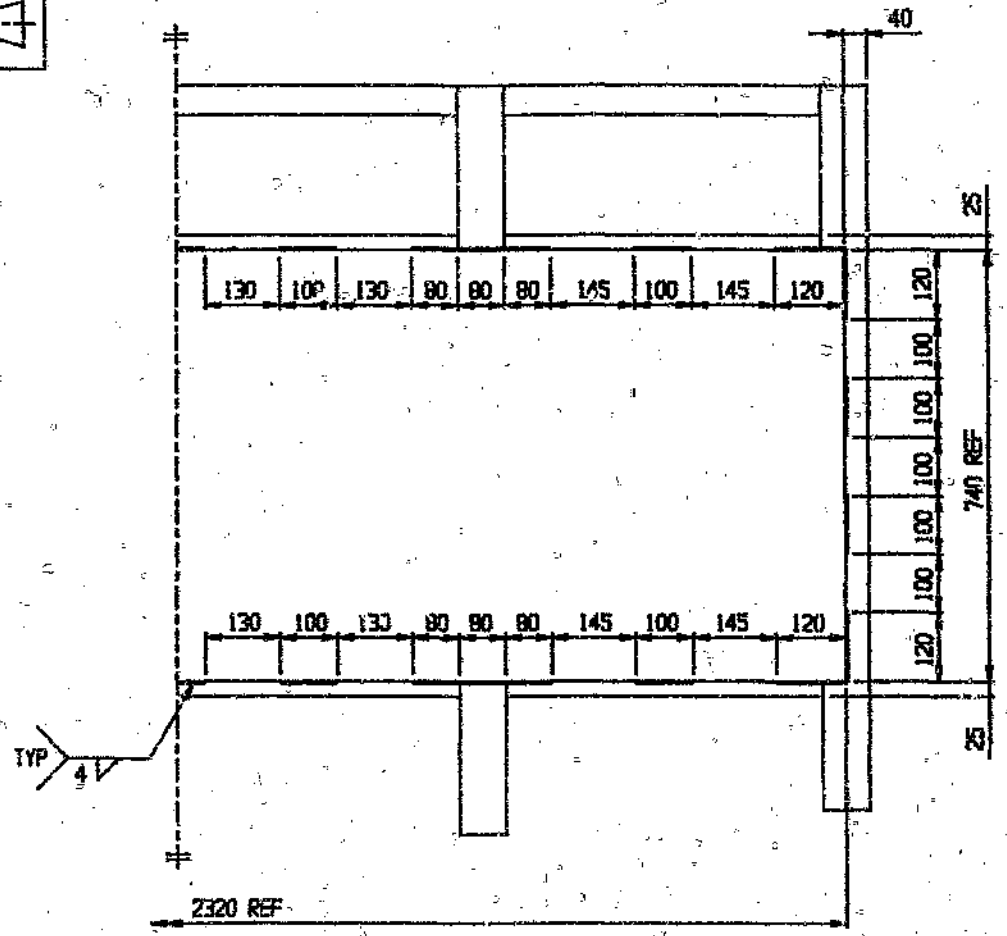

NOTE:

1. ALL WELDS MIG WELDS. FILLER ALLOY AA 5356 1.2 mm WIRE.

ITEM	DESCRIPTION	MATERIAL	DRG. NUMBER	QTY

UWtec

UNIVERSITY OF THE WITWATERSRAND

LIGHTWEIGHT ALUMINIUM SEMI-TRAILER PROJECT

MATERIAL:	
SCALE:	1:7.5
DATE:	30-10-03
DRAWN:	M.ELSTON

TITLE:

HEADBOARD WELDING DETAIL

(4.77mm PLATE TO FRAME)

DRG. No:

HB-02

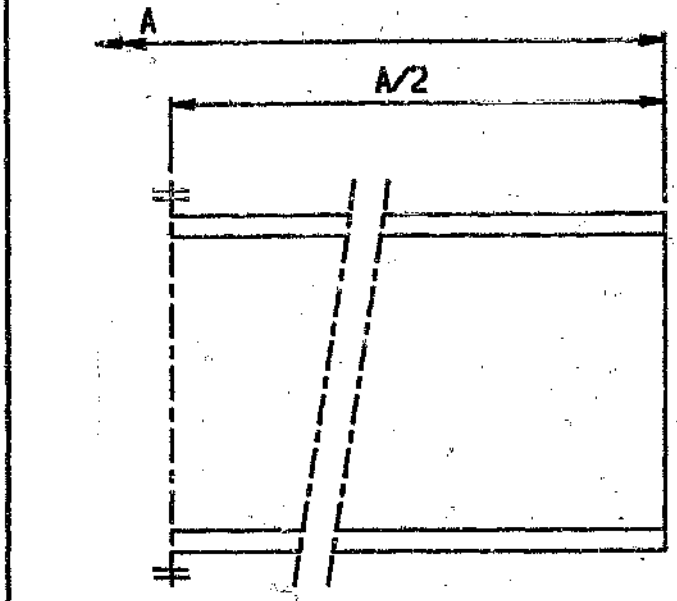

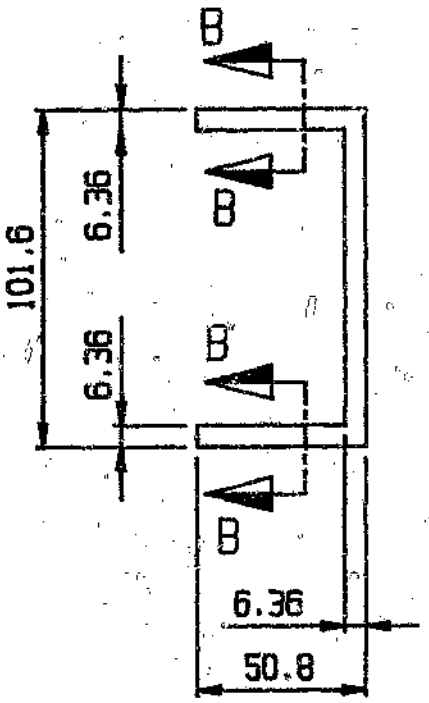

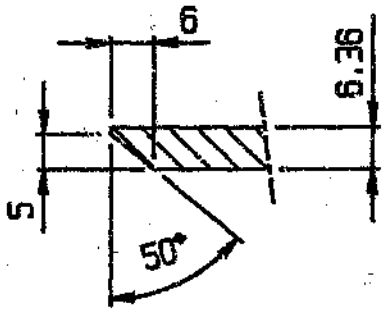

SECTION B-B
(WELD PREPARATION DETAIL)

NOTE.

1. GRIND WELD PREPARATIONS USING NON-CARBORUNDUM GRINDING DISCS.

MATERIAL: EXTRUDED ALUMINIUM CHANNEL SECTION
101.6 x 50.8 x 6.36 x 6.36 x A LG.
HULETTS SHAPE No. 16252
D65S - TF ALLOY

550	HB-03-02
980	HB-03-01
A	OPTION No.

UWtec

UNIVERSITY OF THE WITWATERSRAND

LIGHTWEIGHT ALUMINIUM SEMI-TRAILER PROJECT

MATERIAL:	
SCALE:	1:2
DATE:	30-10-83
DRAWN:	M.ELSTON

TITLE: HEADBOARD CHANNEL

DRG. No: HB-03

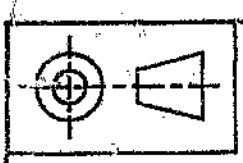

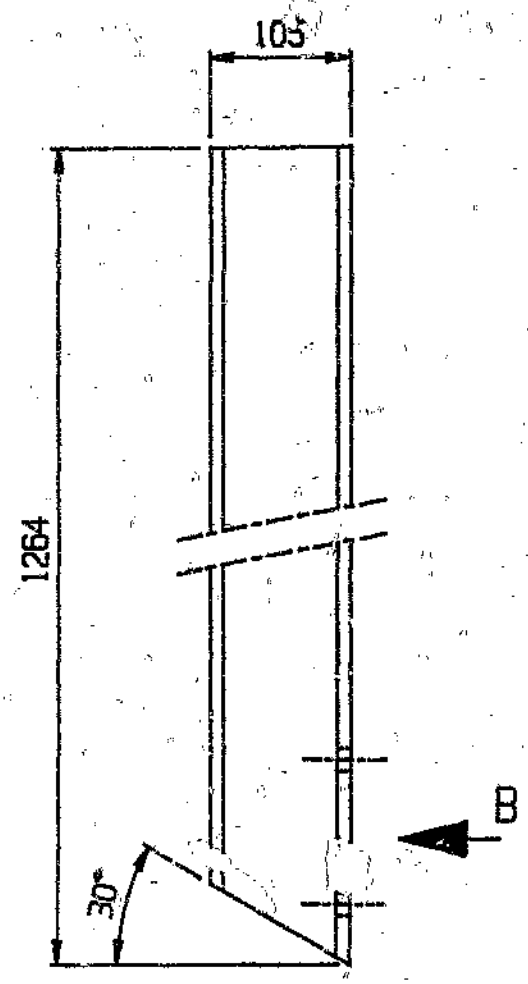

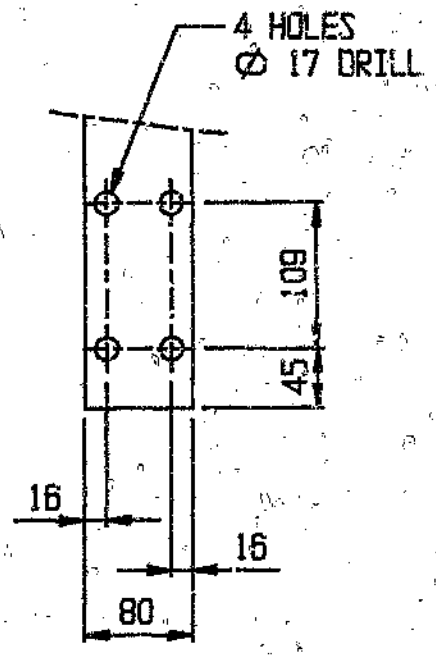

DETAIL ON ARROW 'B'

MATERIAL: EXTRUDED ALUMINIUM I - SECTION
105 x 80 x 10 x 8 x 1264 LG.
HULETTS SHAPE No. 17099
D65S - TF ALLOY

UWtec	UNIVERSITY OF THE WITWATERSRAND		
	LIGHTWEIGHT ALUMINIUM SEMI-TRAILER PROJECT		
MATERIAL:		TITLE:	DRG. No:
SCALE:	1:5	HEADBOARD INNER UPRIGHT	HB-04
DATE:	30-10-83		
DRAWN:	M.ELSTUN		

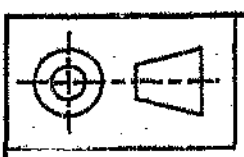

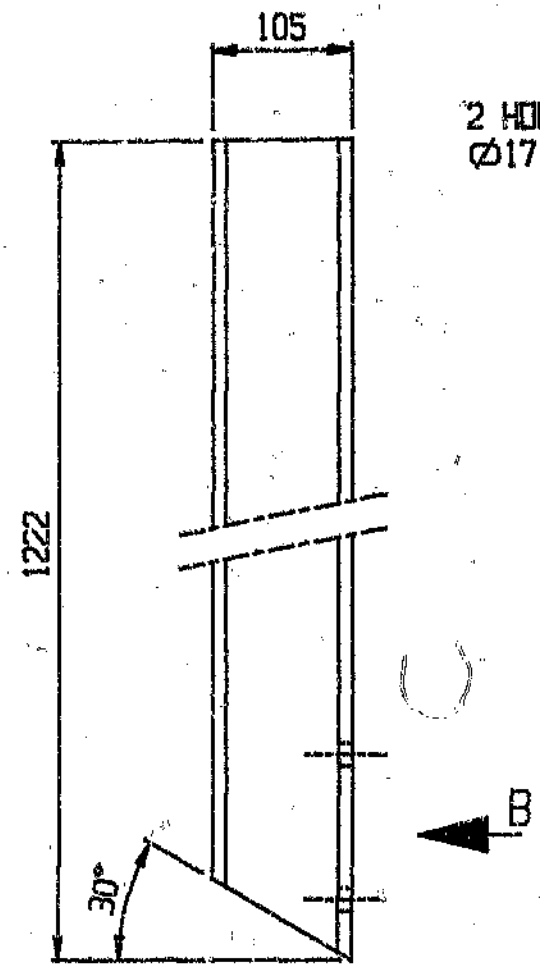

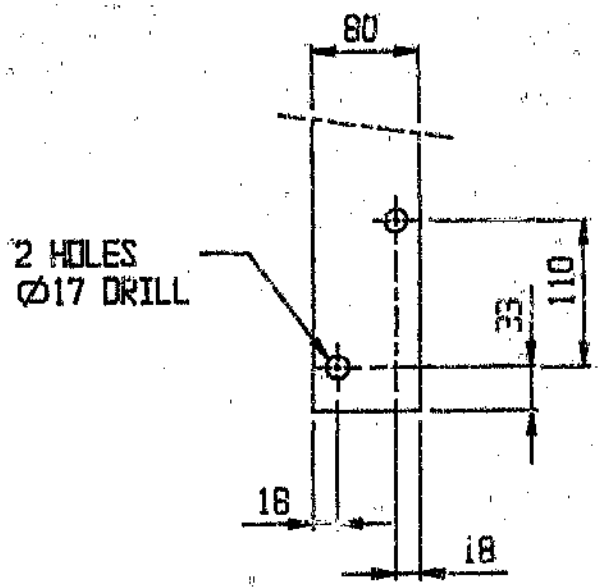

DETAIL ON ARROW 'B'

NOTE.

1. RH AS SHOWN. LH OPPOSITE.

MATERIAL: EXTRUDED ALUMINIUM I - SECTION
105 x 80 x 10 x 8 x 1222 LG.
HULETTS SHAPE No 17099
D65S - TF ALLOY

UWtec	UNIVERSITY OF THE WITWATERSRAND		
	LIGHTWEIGHT ALUMINIUM SEMI-TRAILER PROJECT		
MATERIAL:		TITLE: HEADBOARD OUTER UPRIGHT	DRG. No: HB-05
SCALE:	1:5		
DATE:	30-10-83		
DRAWN:	M.ELSTON		

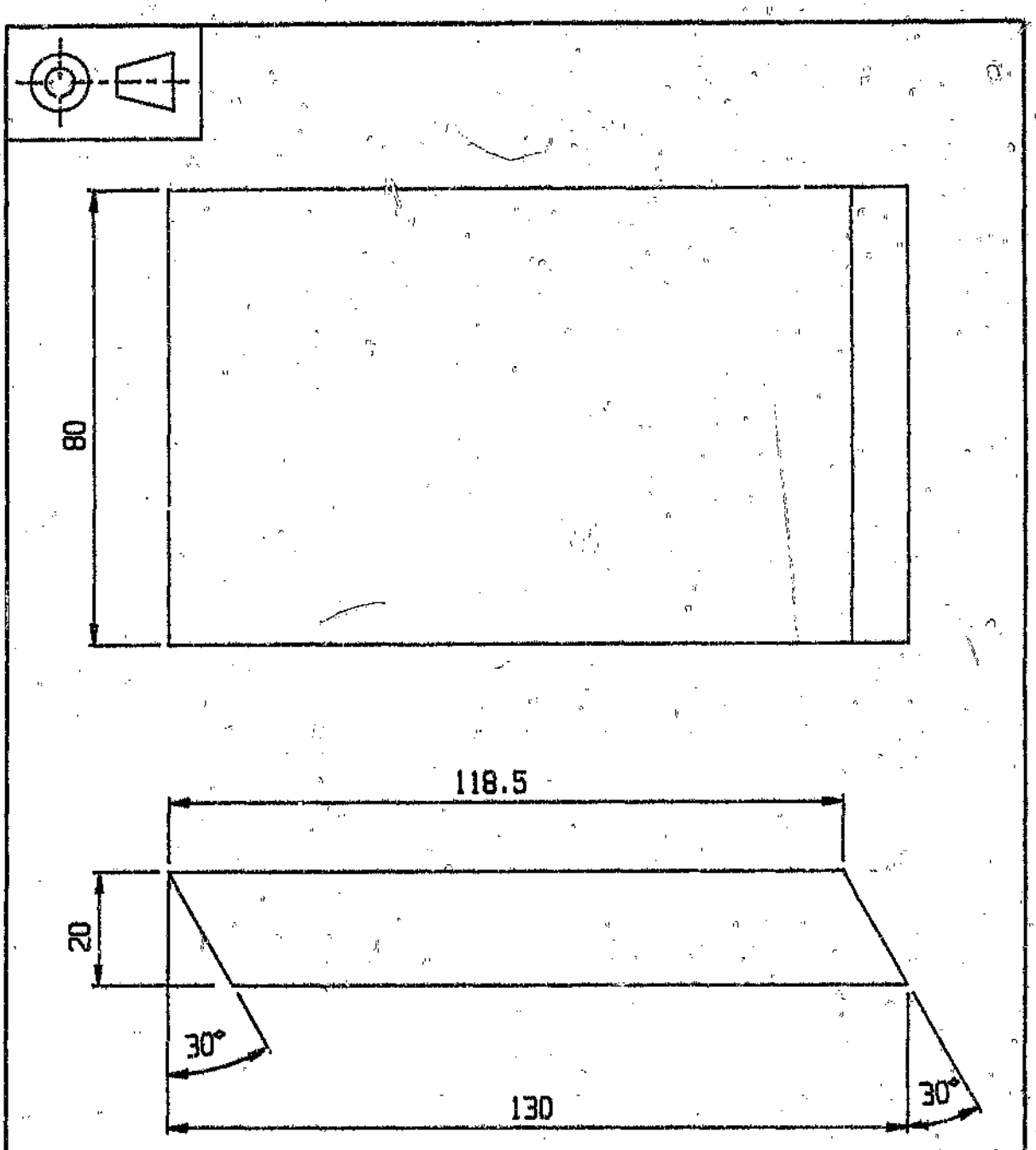

MATERIAL: 20mm ALUMINIUM ALLOY PLATE 130 x 80
B51S - TF ALLOY

UWtec	UNIVERSITY OF THE WITWATERSRAND LIGHTWEIGHT ALUMINIUM SEMI-TRAILER PROJECT		
MATERIAL:		TITLE: HEADBOARD UPRIGHT SKID PAD	DRG. No: HB-06
SCALE:	1:1		
DATE:	30-10-83		
DRAWN:	M.ELSTON		

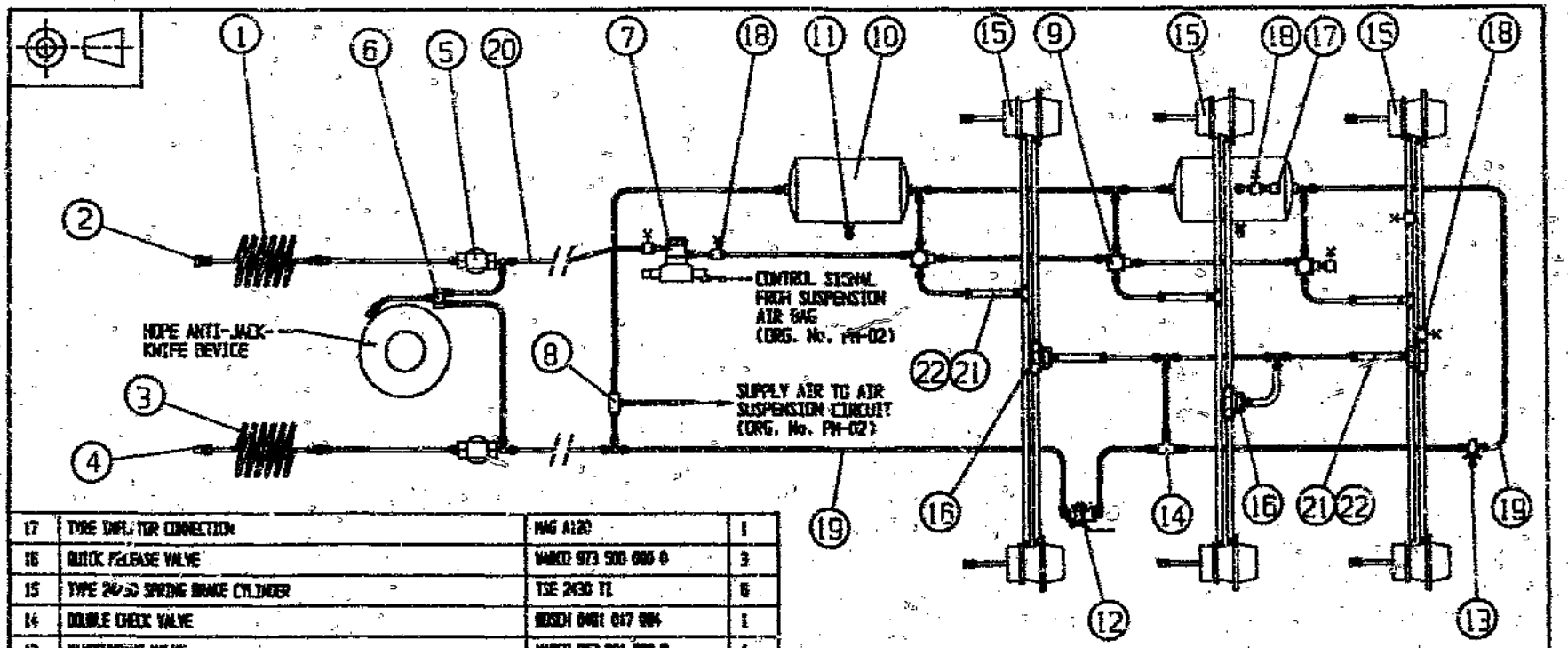

ITEM	DESCRIPTION	PART NUMBER	QTY
17	TYRE INFLATOR CONNECTION	MAC A120	1
16	QUICK RELEASE VALVE	WABCO 973 500 000 0	3
15	TYPE 24/30 SPRING BRAKE CYLINDER	TSE 2430 TT	6
14	DOUBLE CHECK VALVE	BOSCH 0481 017 004	1
13	PRESSURE PROTECTION VALVE	WABCO 963 001 000 0	1
12	PARKING BRAKE VALVE	WABCO 452 002 107 0	1
11	DRAIN VALVE	BOSCH 0481 010 002	2
10	RESERVOIR (30 l)	BOSCH 0444 300 000	2
9	RELAY VALVE	BOSCH 0481 020 005	3
8	DUAL CIRCUIT CHARGING VALVE	BOSCH 0481 027 004	1
7	AUTOMATIC LOAD - SENSING VALVE	WABCO 475 700 220 0	1
6	HOPE DEVICE CONTROL VALVE	-	1
5	LINE FILTER	WABCO 432 580 020 0	2
4	EMERGENCY LINE COUPLING	BOSCH SVC 1	1
3	EMERGENCY SUPPLY & FITTINGS (RED)	BOSCH BAR 511 - RR + FIT	1
2	SERVICE LINE COUPLING	BOSCH SVC 3	1
1	SERVICE SUPPLY & FITTINGS (YELLOW)	BOSCH BAR 511 - BR + FIT	1

ITEM	DESCRIPTION	PART NUMBER	QTY
23	SCHRADER PLUG TYPE FITTINGS	VARIOUS	-
22	HOSE CLAMP	TRIDON M16	12
21	SINGLE COTTON BRAID RUBBER BRAKE HOSE - BLACK	12.7 mm BORE	-
20	NON-REINFORCED POLYAMIDE TUBE - YELLOW	12 mm OD x 1.5 mm WALL	-
19	NON-REINFORCED POLYAMIDE TUBE - RED	12 mm OD x 1.5 mm WALL	-
18	TEST POINT	SCHRADER 72 21 04 00	6

UWtec

UNIVERSITY OF THE WITWATERSRAND

LIGHTWEIGHT ALUMINIUM SEMI-TRAILER PROJECT

MATERIAL:	
SCALE:	1:15
DATE:	20-07-04
DRAWN:	M.ELSTON

TITLE: BRAKE AND HOPE DEVICE PNEUMATIC SYSTEM

DRG. No: PM-01

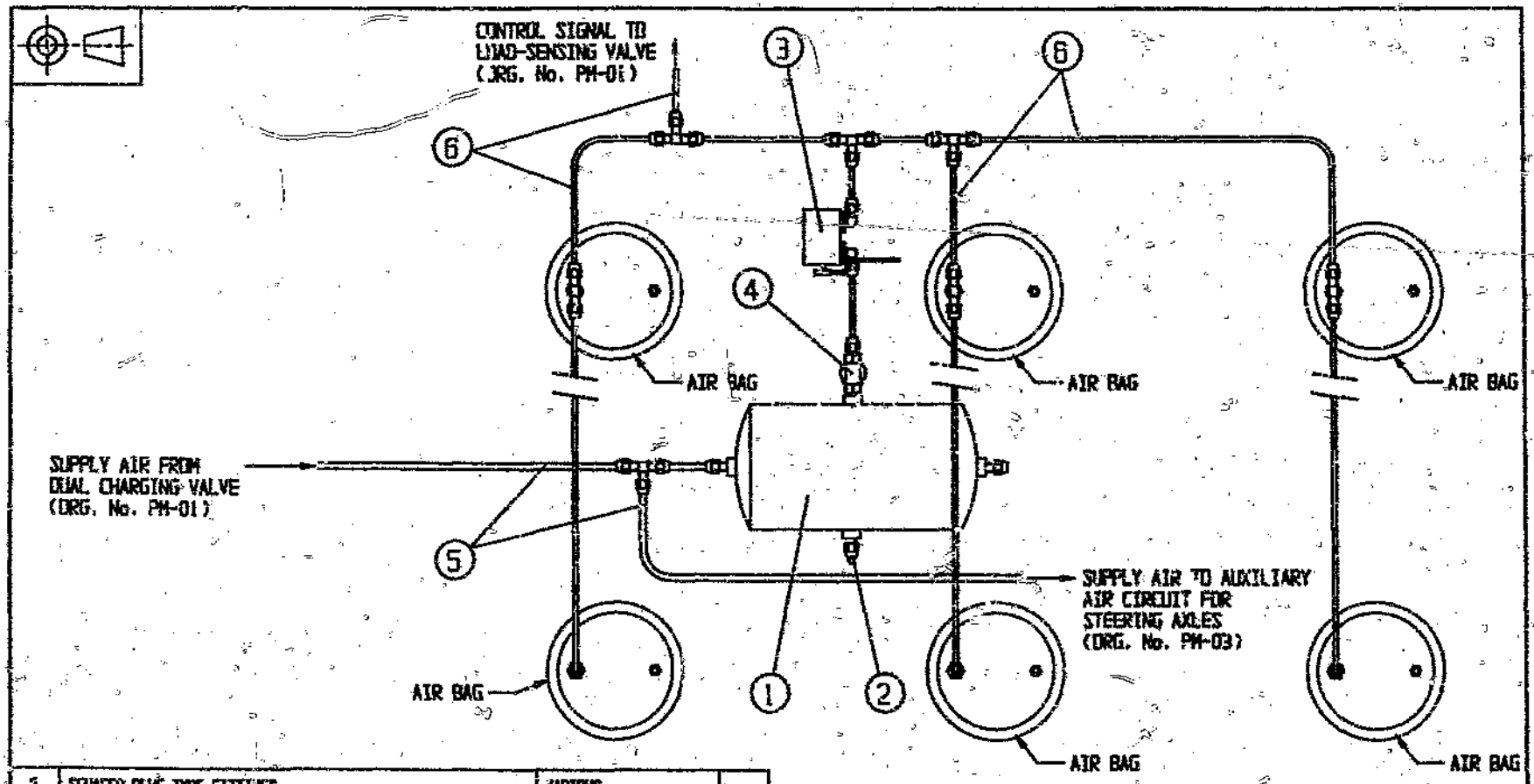

ITEM	DESCRIPTION	PART NUMBER	QTY
7	SCHAFER PLUG TYPE FITTINGS	VARIOUS	-
6	NON-REINFORCED POLYAMIDE TUBE - BLACK	0.25 INCH. MIN BORE	-
5	NON-REINFORCED POLYAMIDE TUBE - BLACK	12 mm OD x 1.5 mm WALL	-
4	LINE FILTER	FRUEHAUF A-972093	1
3	SUSPENSION LEVELING VALVE	FRUEHAUF A-CE 3130-1	1
2	DRAIN VALVE	BOSCH 0491 019 002	1
1	RESERVOIR (20 l)	FRUEHAUF A-CE 5930-6	1

UWtec

UNIVERSITY OF THE WITWATERSRAND
LIGHTWEIGHT ALUMINIUM SEMI-TRAILER PROJECT

MATERIAL:	
SCALE:	1:7.5
DATE:	23-07-84
DRAWN:	M.ELSTON

TITLE: AIR SUSPENSION PNEUMATIC SYSTEM

DRG. No: PM-02

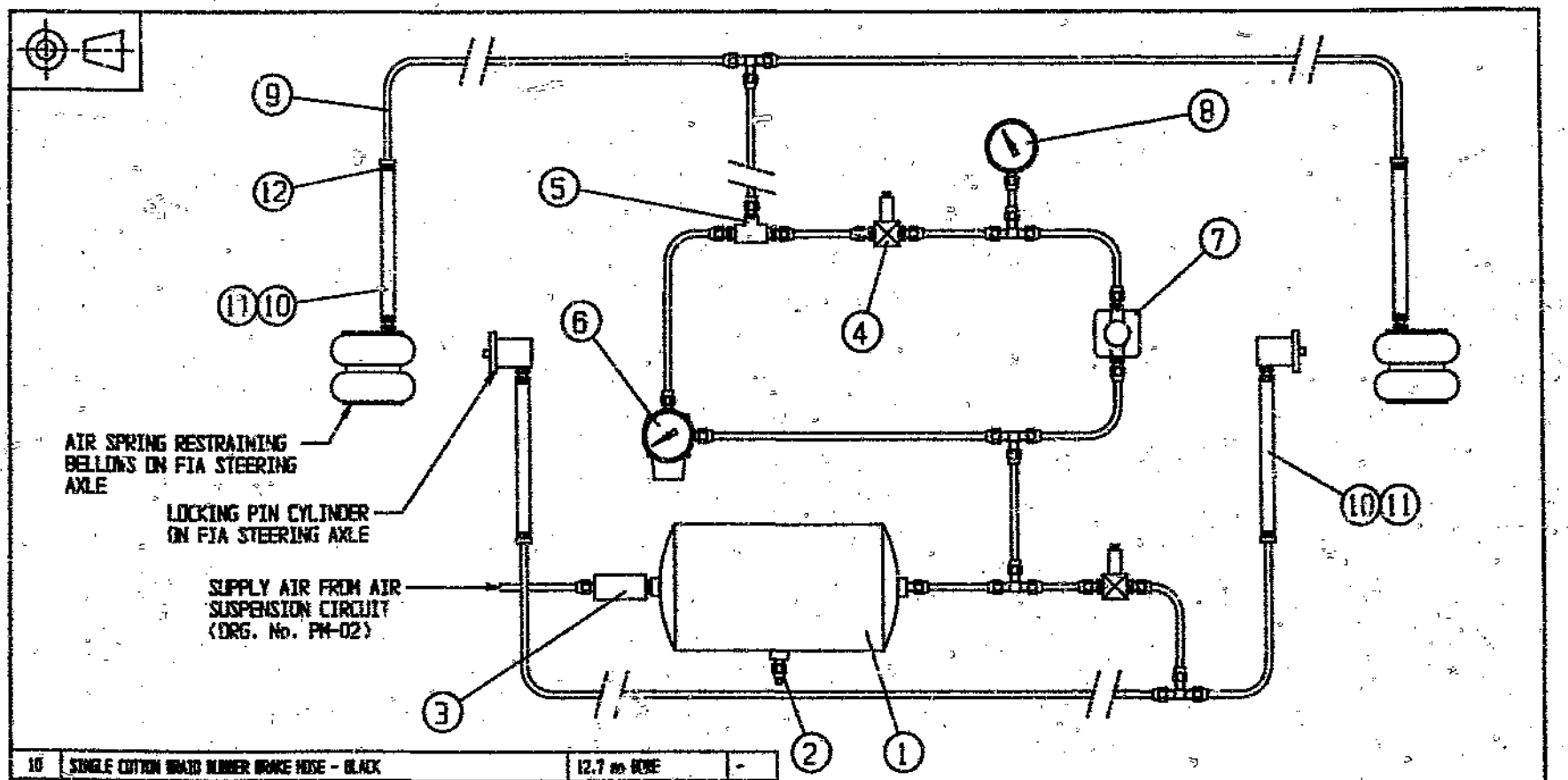

ITEM	DESCRIPTION	PART NUMBER	QTY
10	SINGLE COTTON BRAID RUBBER BRAKE HOSE - BLACK	12.7 mm BORE	-
9	NON-REINFORCED POLYAMIDE TUBE - GREEN	12 mm OD x 1.5 mm WALL	-
8	PRESSURE GAUGE	FERRIS (0 - 100 Psi)	1
7	PRESSURE REDUCING VALVE (50 Psi)	BOSCH 0481 008 009	1
6	PRESSURE REDUCING VALVE (25 Psi)	BOSCH 0821 302 404	1
5	DOUBLE CHECK VALVE	BOSCH 0481 017 004	1
4	SOLENOID VALVE 12 V	BOSCH 0481 503 015	2
3	CHARGING VALVE (PART OF FRUEHAUF AIR SUSPENSION KIT)	-	1
2	DRAIN VALVE	BOSCH 0481 018 002	1
1	RESERVOIR (15 l)	BOSCH 0438 150 000	1

ITEM	DESCRIPTION	PART NUMBER	QTY
12	SNAPPER PLUG TYPE FITTINGS	VARIOUS	-
11	HOSE CLAMP	19/32mm WIDE	6

UWtec

UNIVERSITY OF THE WITWATERSRAND

LIGHTWEIGHT ALUMINIUM SEMI-TRAILER PROJECT

MATERIAL:	
SCALE:	1:7.5
DATE:	22-07-84
DRAWN:	M.ELSTON

TITLE: AUXILIARY PNEUMATIC SYSTEM FOR STEERING AXLES

DRG. No: PM-03