

https://dspace.org/

Evaluation of exposure to polycyclic aromatic hydrocarbons in ferrochrome plant workers in South Africa from 2012 to 2015

Mvulane, Nombuyiselo

2020
https://hdl.handle.net/10539/31746

Downloaded from a DSpace repository. https://dspace.org/

EVALUATION OF EXPOSURE TO POLYCYCLIC AROMATIC HYDROCARBONS IN FERROCHROME PLANT WORKERS IN SOUTH AFRICA FROM 2012 TO 2015.

NOMBUYISELO MVULANE

November 2020

DECLARATION

I, Nombuyiselo Mvulane, hereby declare that the work on which this dissertation is based is my original work (except where acknowledgements indicate otherwise) and that neither the whole work nor any part of it has been, is being, or is to be submitted for another degree in this or any other university.



17 November 2020

DEDICATION

I would like to dedicate this work to:

My family

Thank you for your love and support.

ABSTRACT

Background: Polycyclic aromatic hydrocarbons (PAHs) are organic compounds that are found in a wide variety of environments. Epidemiological studies have shown excess rates of cancers of the skin, lung, bladder and gastrointestinal tract in some industrial settings where airborne PAH levels are high. Their levels are thus monitored in high-risk workplace environments and in exposed workers. Surrogate markers that are used for monitoring have shown that exposures to PAHs vary among individuals, and in different workplaces.

Aims: The study aims to describe the total exposure to PAHs in workers at a ferrochrome plant, the contribution of various sources to overall exposure to PAHs, and analyse trends in urine 1-hydroxypyrene (1-OHP) levels over time (2012-2015).

Methods: The investigation was a retrospective record review of PAH monitoring in workers at a ferrochrome plant from 2012 to 2015. The data came from the yearly routine health monitoring of the employees. The study population consisted of men and women who were monitored for exposure to PAHs [coal tar pitch volatiles (CTPV) were measured as benzene soluble matter (BSM) in the air; and in urine (PAHs) as the pyrene metabolite 1-OHP]. A total of 397 records were provided which consisted of records of 111, 102, 83, and 101 employees in the years 2012, 2013, 2014, and 2015 respectively. A total of 86 PAH exposure-related health questionnaires were received. CTPV (air monitoring) data for 2012 to 2015 for 39 employees was also received. Univariate, bivariate, and multivariable analysis was performed on the data.

Results: Most of the employees worked in Paste Making (PM) production, PM maintenance, and Safety Health Environment and Quality/ Laboratory (SHEQ/Lab) departments. Most of the employees (>70%) had urine 1-OHP results below the ‘‘no-observed-effect-level of

genotoxic effect" benchmark guideline of 1.4µmol/mol (2012-2015). The median 1-OHP for 2013-2015 was 1µmol/mol, with a similar interquartile range (IQR), but a variation in range over the same years [Range: 2013 (0.1-8.4); 2014 (0.1-4.3); 2015 (0.1-9)]. The personal air monitoring results showed marked variation over the years with the lowest levels recorded in 2013[median (range) 0.00095 (0-0.006)], and the highest levels in 2015 [median (range) 0.0495 (0.015-0.244)]. However, all the personal air monitoring results were below those recommended by the South African regulatory guidelines of 0.14mg/m3. There was a statistically significant relationship between urine 1-OHP and department-section in all the years. However, there was no statistically significant relationship between urine 1-OHP and potential non-occupational exposure to PAHs (e.g. smoking and diet). There was a statistically significant increase in the results for 1-OHP every year from 2012-2015. The increase was still apparent after adjusting for department-sections. The department-sections that had urine 1-OHP levels that were significantly higher than SHEQ/Lab were: furnaces C; furnace D/E; and PM production, in decreasing order respectively.

Conclusion: The findings of this research indicate that the PAHs (as CTPV) in personal air within this work environment are controlled at levels below those recommended by the South African regulatory guideline of 0.14mg/m^3. The results of urine 1-OHP vary over time and with a combination of work department and section. The department-sections that have urine 1-OHP results that are statistically significantly higher than SHEQ/Lab are: furnace C; furnace D/E; and PM production, in decreasing order respectively. Urine 1-OHP levels, however, are not influenced by personal exposures outside the workplace such as: smoking, diet, heating, cooking facilities and ventilation at home. The regular monitoring of PAHs is necessary in a ferrochrome plant.

ACKNOWLEDGEMENTS

"The journey of a thousand miles begins with one step" Chinese proverb

I would like to thank: my supervisors Kerry Wilson and Jenny Sappire; Felix Made; and Zodwa Ndlovu, for their meaningful and generous assistance. I would also like to thank my lecturers and classmates for their contribution to this journey.

I learnt a lot about myself and research in this journey, which I hope to share with others.

TABLE OF CONTENTS

	PAGE
LIST OF FIGURES	ix
LIST OF TABLES	x
LIST OF ABBREVIATIONS	xi
CHAPTER 1: INTRODUCTION	1
1.1. Background	1
1.1.1 Monitoring of PAHs	3
1.2. Literature Review	7
1.2.1 Ferrochrome production	7
1.2.1.1 Ferrochrome production process	8
1.2.1.2 Graphite electrodes	9
1.2.1.3 Electrode paste	9
1.2.2 Polycyclic aromatic hydrocarbons (PAHs)	10
1.2.2.1 Biochemistry of PAHs	10
1.2.2.2 Sources of PAH exposure	10
1.2.2.3 Other sources of variation of urine 1-OHP between individuals	15
1.3. Problem statement	16
1.4. Research question	15
1.5. Justification of the study	16
1.6. Aim and specific objectives	17
CHAPTER 2: METHODOLOGY	18
2.1. Study design and data source	18
2.2. Study Setting	18
2.3. Sudy population and sample	21
2.4.Measurements	23
2.4.1 Measurement of urine 1-OHP	23
2.4.2 Health questionnaire	24
2.4.3 Measurement of Air PAH	24

2.5. Data management and Analysis	26
2.5.1 Data management: Outcome of interest	26
2.5.2 Data management: Other covariates	27
2.5.3 Data management: Air PAH	30
2.5.4 Data analysis	31
2.5.4.1 Multilevel mixed Tobit regression	34
2.6. Ethics	36
2.7 Dissemination of results	36
CHAPTER 3: RESULTS	37
3.1 Introduction	37
3.2 Work areas and personal characteristics	37
3.2.1 Distribution of employees in work areas (department, section, job description)	37
3.2.2 Distribution of employees in work areas (department and section combined)	40
3.2.3 Description of personal characteristics (2012- 2014)	41
3.3 Description of urine biomarker 1-OHP	44
3.4 Results of air monitoring	47
3.4.1 Description of air CTPV/ PAH results (in mg/m3) for 2012-2015	47
3.4.2 Bivariate analysis (air CTPV and: job description; department)	50
3.5 Relationship between urine 1-OHP and: work area and personal characteristics	52
3.5.1 Bivariate analysis showing the unadjusted relationship between urine 1-OHP and: work department- section from the appended data (2012- 2015)	52
3.5.2 Bivariate analysis showing the unadjusted relationship between urine 1-OHP and other covariates (2012- 2014)	54
3.6 Trends in urine 1-OHP results over time (2012-2015).	56
3.6.1 Trends in urine 1-OHP (continuous) over time (unadjusted)	56
3.6.2 Trends in urine 1-OHP (continuous) over time adjusted for Department-section (2012-2015)	57
CHAPTER 4: DISCUSSION	58
4.1 Description of employee work area	59
4.2 Overall urine biomarker 1-OHP results	60
4.3 Results of air monitoring	61

4.4 Relationship between urine 1-OHP and: work and personal characteristics	62
4.5 Trends in urine 1-OHP results over time (2012-2015).	65
4.6 Limitations	66
CHAPTER 5: CONCLUSION AND RECOMMENDATIONS	68
5.1 Conclusion.	68
5.2 Recommendations	68
REFERENCES	70
APPENDIX A: ETHICS CLEARANCE CERTIFICATE	87
APPENDIX B: GENERAL CONSENT FORM FOR MEDICAL SURVEILLANCE AND TESTING (signatory portion)	88
APPENDIX C CTPV (COAL TAR PITCH VOLATILES) EXPOSURE QUESTIONNAIRE	89
APPENDIX D: TABLE 1.2: SUMMARY OF PUBLICATIONS REPORTING THE DIETARY INTAKE OF BENZO (a) PYRENE AND TOTAL PAHs (in µg/day) IN VARIOUS COUNTRIES	90
APPENDIX E: TABLE 1.3: THE LEVELS OF URINE 1-OHP FROM WORKERS IN VARIOUS INDUSTRIES	92

LIST OF FIGURES

Figure 1.1 **:** Furnace process inputs and outputs

LIST OF TABLES

Table 1.1 **:** Regulation standards for polycyclic aromatic hydrocarbons in air

Table 1.2 **:** Summary of publications reporting the dietary intake of benzo (a) pyrene and total PAHs (in µg/day) in various countries

Table 1.3 **:** The levels of urine 1-OHP in workers from various industries

Table 2.1 **:** Organization of work areas into departments, sections, and job descriptions

Table 2.2 **:** Biological monitoring of CTPV-grading of exposure and action plan

Table 2.3 **:** Record of data received versus data analysed

Table 2.4 **:** Data management and analysis steps, statistics/ tests, and rationale

Table 2.5 **:** Comparison of statistical models: analysis of trends in urine 1-OHP over time

Table 3.1 **:** Work departments, sections, and job descriptions of employees (2012-2015)

Table 3.2 **:** Descriptive statistics for work Department-Section (combined data for 2012-2015)

Table 3.3 **:** Description of personal characteristics (2012- 2014)

Table 3.4 : Description of urine 1-OHP results (in µmol/mol) for 2012-2015

Table 3.5 **:** Description of Air CTPV/ PAH results (in mg/m3) for 2012-2015

Table 3.6 **:** Description of air CTPV/PAH results per job description and department (2012-2015)

Table 3.7 **:** Bivariate analysis showing the relationship between Air CTPV and: work department and job description for 2012-2015

Table 3.8 **:** Bivariate analysis showing the unadjusted relationship between 1-OHP and: work department-section from combined data (2012-2015).

Table 3.9 **:** Bivariate analysis showing the unadjusted relationship between 1-OHP and other covariates

Table 3.10 **:** Trends in urine 1-OHP (continuous) results over time (unadjusted)

Table 3.11 **:** Trends in urine 1-OHPresults over time adjusted for work Department-Section (2012-2015)

LIST OF ABBREVIATIONS

Al_2O_3	Aluminium oxide
ACGIH	American Conference of Governmental Industrial Hygienists
ANSES	French Agency for Food, Environmental and Safety Executive
BAT	Biologische Arbeitsstoff-Toleranzwerten (Biological Tolerance Values)
BEI	Biologic exposure index
BEL	Biologic exposure limit
BMGV	Biological Monitoring Guidance Value
BSM	Benzene soluble matter
CTPV	Coal tar pitch volatiles
DFG	Duetsche Forschungsgemeinschaft (German Science Foundation)
DNA	Deoxyribonucleic acid
8-hr-TWA	Eight-hour time weighted average
HR	Human Resource
HSE	UK Health &Safety Executive
1-OHP	1-hydroxypyrene
IARC	International Agency for Research on Cancer
MgO	Magnesium oxide
NIOSH	National Institute for Occupational Safety and Health
OEL	Occupational exposure limit
OEL-CL	Occupational exposure limit- control limit
OEL-RL	Occupational exposure limit- recommended limit
PAHs	Polycyclic aromatic hydrocarbons
PEL	Permissible exposure limit
REL	Recommended exposure limit
SCOEL	European Scientific Committee on Occupational Exposure Limits
SCS	Spillage Cleaning Services
SIO_2	Silicon dioxide
16 US EPA-PAH	United States Environmental Protection Agency 16 priority PAHs

CHAPTER 1: INTRODUCTION

In this research, we attempted to: describe the total exposure to polycyclic aromatic hydrocarbons (PAHs) among workers at a chrome smelting plant in South Africa; evaluate the contribution of various sources to overall exposure to PAHs; and analyse the trends in urine 1-hydroxypyrene (1-OHP) levels over a period of four years (2012-2015). There is limited data published in the literature on the exposure to PAHs in the ferrochrome industry.

1.1 BACKGROUND

Polycyclic aromatic hydrocarbons (PAHs) are organic compounds that are found in a wide variety of environments such as industrial and residential e.g. burning of fossil fuels (Brandt et al., 2003). Major sources of occupational exposure are from: coal tar and its derivatives; petroleum distillation; and the burning of organic compounds in workplaces such as coke works, gas works, and aluminium industries (Jongeneelen, 2001). PAHs may also be produced from fossil fuel combustion, vehicle exhausts, and the use of lubricant oils. Other reported significant exposures may come from the diet and smoking (Jongeneelen, 2001).

PAHs enter the body through inhalation, the skin and the diet (Moen et al., 1996). There are acute and chronic health effects that may result from exposure to some of the PAHs (Kim et al., 2013). However, in the environments in which PAHs are found in abundance, there are other toxic chemicals that are released (Kim et al., 2013). Thus it is not easy to determine how much of those effects are solely due to the PAHs per se.

The acute health effects that have been reported following occupational exposure to mixtures containing PAHs include: eye irritation, diarrhoea, nausea, vomiting, confusion, skin irritation, and inflammation. Chronic exposure to PAHs has been associated with cataracts, kidney and liver damage, immunotoxicity, and respiratory symptoms (Abdel-Shafy et al.,

2015; Kamal et al., 2015). There are studies that have suggested that PAHs may be teratogenic (Kim et al., 2013).

Epidemiological studies among workers exposed to mixtures containing PAHs suggest that PAHs are carcinogenic. This dates as far back as the observation by Sir Percival Pott of increased skin cancers among London chimney sweeps that were exposed to soot which contains PAHs (Brown & Thornton, 1957). PAHs are mainly associated with skin and lung cancer, but also cancers of the bladder and intestines (Boffetta et al., 1997; Kim et al., 2013). Studies suggesting this were done in work environments such as: coke production; coal gasification; and oil refining (Bach et al., 2003; Zhang & Tao, 2009). Lung cancer has also been reported in laboratory animals exposed to some PAHs for a long period of time (Kim et al., 2013). However, the evidence for the carcinogenic potential of PAHs is qualitative (Gehle, 2009).The carcinogenicity of these compounds is attributed mainly to the changes that their reactive intermediates induce on DNA (deoxyribonucleic acid).

Several agencies have classified PAHs as: known animal carcinogens; probable human carcinogens; or not classifiable as to human carcinogenicity. The seven PAHs that have been classified as probable human carcinogens by the U.S. environmental protection agency (EPA) are: benz(a)anthracene, benzo(a)pyrene, benzo(b)fluoranthene, chrysene, dibenz(ah)anthracene, and indeno(1,2,3,-c,d)pyrene. Two of those PAHs (Benz(a)anthracene, benzo(a)pyrene) have also been classified as probable human carcinogens by the International Agency for Research on Cancer (IARC) (USEPA, 2008 from Kim et al., 2015).

Given these potential health effects due to PAHs, their levels are thus monitored in high-risk workplace environments and in exposed humans (Aquilina et al., 2010).

1.1.1 Monitoring of PAHs

Monitoring of the workplace and of the internal dose of PAH in exposed humans is termed environmental monitoring and biologic monitoring (biomonitoring), respectively. Surrogate markers are used for both environmental monitoring and biomonitoring (Jongeneelen, 2001). The aim of both the environmental and biomonitoring is to keep the exposure to PAHs as low as possible; however, there are occupational exposure limits for assessing workplace exposure (Unwin et al., 2006)

Environmental monitoring and Occupational exposure limit

Environmental monitoring of PAH levels in workroom air, or personal air sampling, is conducted during hygiene assessments. There are more than 100 different types of PAHs which are present as complex mixtures, and not as a single substance (Wu et al., 1998). Within a mixture, the carcinogenic and non-carcinogenic PAHs are present in different proportions, which can vary according to the specific work environment. It is not feasible to measure all PAHs in an environment, so a suitable representative of the complete set is used (Wu et al., 1998).

The measurement of PAHs in the air may be: that of a surrogate marker such as coal tar pitch volatiles (CTPV) as benzene soluble matter (BSM); direct determination of several PAHS e.g. United States Environmental Protection Agency 16 priority PAHs (16 EPA-PAH); or that of an individual PAH such as benzo (a) pyrene (BaP) (Jongeneelen, 2001). Both the gaseous and particulate fraction may be measured (Viau 1999; Jongeneelen, 2001). The maximum amount of exposure that is allowed in the workplace is called the occupational exposure limit (OEL). In order to control exposure to chemicals in occupational settings, occupational exposure limits (OELs) such as the threshold limit value (TLV) and the Maximale Arbeitzplatz-Konzentration werten (MAK-werten) and derived no effect limits for workers

(DNEL-workers), have been derived (Huizer et al., 2014). In Germany the reference substance for PAH in the air is benzo (a) pyrene (BaP), and the workplace threshold value [Deutsche Forschungsgemeinschaft (German technical exposure limit (TRK)] for PAH exposure is 2µg/m^3 (and 5µg/m^3 for coke ovens) (Jongeneelen, 2001). The US uses CTPV as benzene soluble matter (CTPV as BSM) as a surrogate marker for air PAH, and the threshold limit value (TLV) for this is 200µg/m^3 (0.2 mg/m^3) (Angerer et al., 1997; Jongeneelen, 2001). However, this TLV is based on analytical demands, and not on results of health risks from epidemiologic studies (Jongeneelen, 2001). In South Africa, according to the Regulations for Hazardous Chemical Substances from the Occupational Health and Safety Act and Regulations (Act 85 of 1993), the Occupational Exposure Limit (OEL) to CTPVs is 0.14 mg/m^3. Table 1.1 summarizes the regulation standards for PAHs in the air from various countries.

Table 1.1: Regulation standards for polycyclic aromatic hydrocarbons in air *(adapted from Kim et al, 2013, p78)*

Agency	**Level**	**Comments**	**Reference**
American Conference for Governmental Industrial Hygienists (ACGIH)	0.2mg/ m^3	Threshold limit value-time weighted average (TLV-TWA) for coal tar pitch volatiles (CTPV) as benzene soluble matter (BSM)	AGCIH (2005)
National Institute for Occupational Safety and Health (NIOSH)	0.1mg/ m^3	Recommended exposure limit (REL) for CTPV	NIOSH (2014)
NIOSH	0.2mg/ m^3	Permissible exposure limit (PEL) for CTPV as BSM	NIOSH (2014)
Duetsche Forschungsgemeinschaft (DFG; German Science Foundation)	2µg/m^3 5µg/m^3 (for coke ovens)	Workplace threshold value [German technical exposure limit (TRK)] for benzo (a) pyrene (B(a)P)	Jongeneelen, 2001; Strunk et al., 2002
Department of labour (South Africa)	0.14 mg/m^3	Occupational Exposure Limit (OEL) for CTPV as BSM	Occupational Health and Safety Act and Regulations (Act 85 of 1993)

Biological monitoring and Biologic exposure limit

PAHs are absorbed into the human body and then metabolized and excreted in the urine and bile (Aquilina et al., 2010).

Biomarkers are used in an attempt to measure the amount of internal exposure to PAHs from different routes. It is a complementary activity to environmental monitoring (Vainio et al., 1985*).* According to Vainio et al. (1985), the aim of monitoring "is to prevent irreversible toxic effects, since such effects are assumed (although they have not been proved) to be early steps in chemical carcinogenesis".

There are various biological markers (biomarkers) that have been used over the years to measure the uptake of PAHs by the body. Some of these have been unsuitable for routine applications because of their lack of specificity (Jongeneelen, 2001). Currently, the most widely used biomarker for exposure to PAHs is urine 1-hydroxypyrene (1-OHP) (Angerer et al., 1997; Jongeneelen, 2001). The 1-OHP is a metabolite of pyrene, a type of PAH, which is not carcinogenic. One-hydroxypyrene (1-OHP) is used because: pyrene is found in all PAH mixtures, rapidly distributed, metabolized and eliminated from the body; 1-OHP in urine presents a constant fraction of total pyrene intake; and the half -life of 1-OHP excretion ranges from 4-35 hours (Aquilina et al., 2010). The American Conference for Governmental Industrial Hygienists (ACGIH) recommends measurements of 1-hydroxypyrene in the end of shift, end-of-work-week urine samples as a biological exposure index (BEI) for assessment of exposure to mixtures containing PAHs (Heikkila et al., 1995; ACGIH, 2005).

In order to assist with the interpretation of results of biomonitoring, Biologic Exposure Limit Values (BLVs)/ Biologic Exposure Limit (BEL) such as: Biologic Exposure Indices (BEIs) and Biologische Arbeitsstoff-Toleranzwerten ("Biological Tolerance Values", BAT), have been used as reference values (Huizer et al, 2014; Cocker, 2014). The reference values for

several chemicals have been published by organizations in various countries such as: the American Conference of Governmental Industrial Hygienists (ACGIH); the Duetsche Forschungsgemeinschaft (DFG; German Science Foundation), the United Kingdom Health &Safety Executive (HSE); the French Agency for Food, Environmental and Safety Executive (ANSES), and the European Scientific Committee on Occupational Exposure Limits (SCOEL) (Cocker, 2014).

Workplace BLVs/ BELs are derived in various ways such as equivalence to occupational exposure limits, or based on biomarker levels that are not associated with ill health (Cocker, 2014). However, another approach that has been used in the United Kingdom (UK) for reference values is based on the 90th percentile of biomarker values from workplace studies in which good occupational hygiene practices have been followed to control exposure (Cocker, 2014).

Since the relative proportion of pyrene to other PAHs differs in various work environments, a single biological exposure limit (BEL) of 1-hydroxypyrene in urine cannot be set for all industries i.e. a BEL has to be industry-specific (Tuakuila et al., 2013). Since there are no epidemiologic data on the cancer rates in relation to long-term average levels of urine 1-OHP, a health-based BEL has not been set (Jongeneelen, 2001).

Jongeneelen (2001) suggested benchmark guidelines based on the studies published in the literature. He suggested three levels for the benchmark guidelines: level one, two and three. Level one is for controls that are not occupationally exposed to PAHs which he suggested to be 0.24μmol/mol creatinine (crea.) and 0.76 μmol/mol creatinine (crea.) for non-smokers and smokers, respectively. Level two is the lowest level at which no observed genotoxic effect was detected in those who are occupationally exposed for which he suggested a value of 1.4 μmol/mol creatinine. The third level is based on studies that correlated air levels and urine

levels in aluminium and coke oven workers. According to Jongeneelen (2001), the urine level that corresponds to the OEL was 2.3 µmol/ mol creatinine and 4.9 µmol/ mol creatinine, respectively, in these two industries.

Other proposals for setting a limit for 1-OHP in the urine are: a Biological Monitoring Guidance Value (BMGV) set at 4.0 µmol/mol creatinine in post-shift samples set by the British Health & Safety Executive (HSE) (Jongeneelen, 2014). This value is derived from the 90th percentile of values from a study of various British companies that followed good occupational hygiene measures (Jongeneelen, 2014). If this BMGV is exceeded, it indicates a need for further investigation into the work practices and occupational hygiene measures.

The ACGIH concluded that there is not sufficient data to determine a BEI for 1-OHP. However, they recommended a benchmark value of 0.5 µmol/ mol in post-shift urine as an indication of occupational exposure to PAH (Jongeneelen, 2014). Relatively more recently Jongeneelen proposed a 1-OHP value of 1.0 µmol/ mol creatinine as a "no observed genotoxic effect level in the body". This value is valid for work environments similar to coke ovens with a pyrene/Benzo-a-pyrene (BaP) ratio of 2.5 (Jongeneelen, 2014).

1.2 LITERATURE REVIEW

1.2.1 Ferrochrome production

Ferrochrome is an alloy of chromium and iron which is produced as charge chrome, low-medium- and high-carbon ferrochrome (Zhou et al., 2017). Ferrochrome is used mainly in the production of stainless steel (Beukes et al., 2012; Bedinger et al., 2014). Chromium is important for the steel's appearance, hardness, and resistance to corrosion (Bhonde et al., 2007). Other uses of ferrochrome include: the manufacture of acid-resistant steels and ball-bearing steels; production of cast irons; and in the powder metallurgy field. High carbon

ferrochrome slag has excellent mechanical properties and is often used as concrete aggregates in the construction of roads and pavements (Zhou et al., 2017).

South Africa was listed as one of the world's largest producers of chrome ore and ferrochrome (38%) in 2014 (Bedinger et al., 2014). Other countries that produced large quantities of ferrochrome in the same year were China (31%), Kazakhstan (10%), and India (8%). Chrome ore is a natural resource that is mined, with South Africa also having the largest viable reserves (12th International ferroalloys congress, Helsinki, 2010).

1.2.1.1 Ferrochrome production process

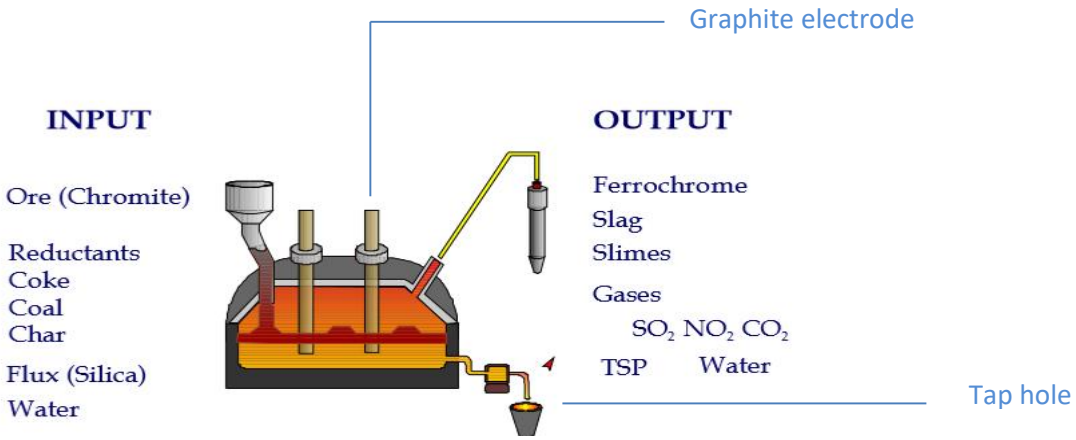

Fig 1.1: Furnace process inputs and outputs (*Adapted from Naiker & Riley, 2006*)

Ferrochrome is produced by the smelting of chromite ore, in the presence of coke and coal, in electric-arc furnaces (Bedinger et al., 2014). Figure 1 shows a simplified picture of an electric arc furnace. The steps in the smelting of ferrochrome include: preparation of materials to be fed to the furnace (raw materials and reductants i.e. the input); feeding of the material into the furnace; smelting within the furnace (using high heat from the electrodes); removal of gases and tapping of the ferrochrome and slag transformers (output) (Mc Dougall, 2013, pp 83-138). The tap hole is closed by a block that is drilled open to allow tapping. The ferrochrome is then tapped intermittently when enough of the smelted material has accumulated in the hearth of the furnace (Zelic, 2005; Zhou et al, 2017). This process is done by tappers.

The Söderberg electrodes that are used in the furnace contain coal tar pitch, which contains PAHs and other substances (the detail about the electrodes is explained in 1.6.1.2). As these electrodes are consumed during the smelting process, more of the electrode is lowered into the furnace at intermittent intervals with additional segments being welded in at the top of the electrode. The welding of more of the electrode is done manually by casing welders. During this process some coal tar pitch volatiles (CTPV) may be released in the workroom air (Moto & Claassen, 2016). CTPV as benzene soluble matter (BSM) has been used as a surrogate marker for airborne PAHs (Jongeneelen, 2001). Other substances that are produced include silicon dioxide (SIO_2), aluminium oxide (Al_2O_3), and magnesium oxide (MgO) (Zhou et al., 2017).

Ferrochrome plants are one of the work environments in which PAH exposure levels are monitored. Employees working in different job descriptions within a chrome smelting plant have also been shown to have different levels of exposure to PAHs (Moto & Claassen, 2016).

1.2.1.2 Graphite electrodes

Graphite electrodes are used to conduct large amounts of electricity from a transformer(s) into the electric arc furnace. The two main types of graphite electrodes are: Söderberg electrodes (continuous self-baking electrodes) and pre-baked electrodes (Shoko et al, 2015). These electrodes differ in the manner in which they are manufactured; however, their uses are similar.

1.2.1.3 Electrode paste

Electrode paste is the material that is contained within the electrode that is used to conduct electricity. It is composed of calcined anthracite coal (heat-treated anthracite coal) combined with a binder such as coal tar pitch. A description of the electrode paste-making process by

Bentsen et al (1998) involves various steps: grinding of calcined anthracite (heat-treated anthracite coal); combining of the calcined anthracite with coal tar to form the electrode paste; checking the plasticity of the paste during mixing; the electrode paste is then filled manually into various moulds by mould fillers; filled moulds are cooled by irrigation with water; the cooled electrode paste is then released from the moulds; moulded electrode paste is then wrapped in polystyrene and transported. Some of the processes are monitored from a ventilated room, while others require manual checking. During the process of manufacturing electrode paste (Paste Making/PM), CTPVs (PAHs) are also released.

1.2.2 Polycyclic aromatic hydrocarbons (PAHs)

1.2.2.1 Biochemistry of PAHs

PAHs can be divided into low molecular weight (less than four rings) and high molecular weight (more than or equal to four rings) compounds (Jongeneelen, 2001). High molecular weight PAHs generally have a high potential of causing mutations, whereas the low molecular weight PAHs are less mutagenic but can be very toxic (Kamal et al., 2015).

1.2.2.2 Sources of PAH exposure

PAHs may be produced from natural or anthropogenic (man-made) sources. The single largest contributor to environmental PAHs is the incomplete combustion derived from both sources (Abdel-Shafy & Mansour, 2015). The PAHs that are produced disperse into the atmosphere, and move to land and aquatic environments thus making PAHs ubiquitous in the environment (Abdel-Shafy & Mansour, 2015). Humans may then be exposed to PAHs via ingestion, inhalation and dermal contact.

Non-occupational exposure to PAHs

Exposure to PAHs outside the workplace may be from food, smoking, dermal contact, and environmental air. Outside the workplace, PAHs in food and smoking seem to be the largest contributors to urine levels of 1-hydroxypyrene (Buckley & Lioy, 1992; Moen et al, 1996; Jongeneelen et al., 2001).

Food is suggested to be the predominant source of exposure to PAHs in people who are non-smokers and are also not exposed occupationally (Phillips, 1999; Benford et al., 2010; Harris et al., 2013; Domingo & Nadal, 2015; Ma & Harrad, 2015). However, there are studies that suggest that environmental contamination in people living in a highly polluted environment may supersede food as a major contributor. The contribution of food to PAH exposure in those with occupational exposure differs in various studies. Some studies suggest that food plays a role, but others suggest that it does not. The limitation in most of these studies is that the dietary contribution was assessed using a self-administered questionnaire, which is open to bias. Another limitation may be the relatively small number of subjects that are analysed (McClean et al., 2004; Lee et al., 2007; Kloslova et al, 2016; Fostinelli et al., 2018;).

It has been suggested that exposure to PAHs in food comes mainly from the cooking processes such as grilling, smoking and drying; but may also be from eating plants grown in soil contaminated with PAHs (Phillips, 1999; Kim et al, 2013). According to Ciecierska and Obiedzinski (2013) “some crops (such as wheat, rye and lentils) may synthesize PAHs or absorb them via water, air, or soil” (Ciecierska & Obiedzinski, 2013; Kim et al., 2013). PAHs may also contaminate food during transportation, and the marine environment may also be contaminated (Kim et al., 2013).

A review by Domingo and Nadal (2015) reported on several studies that assessed the amount of PAHs in various foods. These studies were done in some countries in Europe, United

Kingdom, United States of America, Asia, and Africa. The studies differed in: methodology; foodstuffs that were tested; and the types of PAHs that were measured. Some tested one PAH and others tested several PAHs ranging from 4 to 16 (B (a) P; PAH4, PAH8, or PAH15). The foodstuffs that were tested were mostly according to what is relevant to the diet of that country. Most of the studies looked at uncooked foods, with a few looking at the differences in PAH content that occur with different cooking methods (Domingo & Nadal, 2015). Table 1.2 (see appendix) shows a summary of some of the studies that were done to measure the amount of PAHs in food. The amount of PAHs ranged from: 0.002 µg/day (BaP) in Taiyuan (China) to 0.14 µg/day (BaP) in Spain; and 0.061 µg/day (total PAHs) in Taiyuan (China) to 22.5 µg/day (total PAHs) in a duplicate diet in the Netherlands. Levels as high as 7 µg/day (BaP) and 195 µg/day (Total PAH) were reported for smoked fish (only one food) in Nigeria. Falcó et al. (2003) also did repeated (follow-up) studies, from the same country, to determine the content of 16 PAHs in foods that are common to the diet of the population in Catalonia (Spain). In the follow-up studies they found that the food group with the highest concentration of total PAHs changed over time (Martí-Cid et al., 2008; Martorell et al., 2010; Domingo & Nadal, 2015). The various studies thus showed a wide range in the total estimated levels of PAHs in the diet, which were not necessarily comparable.

Several studies have shown that the amount of PAHs in foods is affected by the method of cooking and the type of food that is cooked (Kazerouni et al., 2001; Domingo & Nadal, 2015; Singh et al., 2016). Barbeque samples of the same food generally show a higher amount of PAHs compared to other cooking methods. In a study by Kazerouni et al (2001) cooked samples of meat and non-meat foods were analysed, and the highest levels of BaP were found in grilled/barbecued very well done steaks and hamburgers and chicken with skin (Kazerouni et al., 2001; Domingo & Nadal, 2015).

In another study that looked at the levels of 16 PAHs in foods such as fish, chicken, pork, and lamb cooked by different methods, fried samples showed higher concentration of PAHs compared to those cooked by other methods. However, roasted hake and chicken had a higher amount PAHs than the fried fish. Other factors that may affect the amount of PAHs in cooked food include: the type and amount of fuel used; distance from the source of heat; and cooking times (Singh et al., 2016).

Several studies have shown that cigarettes contain PAHs (Vu et al., 2015; Yershova et al., 2016). However, the tobacco plant does not naturally contain PAHs, but PAHs are formed during the combustion of tobacco and other constituents of the tobacco product (Vu et al., 2015). The amount of benzo (a) pyrene in main-stream smoke is about 10-50 ng/ cigarette, with the concentration of side-stream smoke being up to four times higher (Jongeneelen, 1994).

The biomarker for PAH, 1-OHP, has been found to be significantly higher in smokers than non-smokers (Jongeneelen et al., 1988; Jongeneelen, 1994; Vanrooij et al., 1994; Gundel et al., 1996). Measurements done in various workplaces have also shown that the levels of 1-OHP are higher in smokers than in non-smokers (Viau et al., 1995; Jongeneelen, 2001; Pesch et al., 2011 Sellappa et al., 2011). However, there are some workplace studies that have found that smoking was not significantly associated with 1-OHP levels (Wu et al., 2003; Tsai et al., 2004; Kloslova et al., 2016). In the study by Moto and Claassen (2016), done in a chrome smelting plant, there was no significant difference in the levels of 1-OHP between smokers and non-smokers. This could be due to the small sample size or bias, given that the information was obtained from a questionnaire.

There may be a seasonal variation in PAHs in the air (Šišović et al., 2002; Gaga et al., 2012; Bandowe et al., 2014; Chen et al., 2016; Tomaz et al., 2016; Feng et al.,2018). In

environments where the major source of PAHs is industrial, there is little variation in the levels of PAHs throughout the year. The levels of PAHs in the air may vary with seasons if the local sources are mainly from residential (Gaga et al., 2012; Feng et al., 2018) and commercial heating. There tends to be a higher amount of PAHs in the air during winter, especially in areas where solid fuels such as coal and wood are used as a source of heating (Kim et al., 2013).This has been reported in Northern Ireland where coal and wood are still used for heating (Brown, 2013). The average BaP concentration in the colder months (December-January) was 3.0ng/m^3, whereas in warmer months (June-August) it was 0.19 ng/m^3 (Kim et al., 2013).

There are also studies that have looked at the relationship between urine 1-OHP and heating/ fuel used in the house. In a study done in Korea amongst housewives, the odds ratio (OR) of 1-OHP was significantly higher in homes with coal/ briquette/ wood heating systems (Park et al., 2018). Solid fuels, such as wood and coal, have been found to produce higher levels of PAHs than gas fuels such as liquid petroleum gas and natural gas (Park et al., 2018).

PAH exposure in the workplace

The occupational exposure is suggested to be the most important source of exposure to PAHs, with levels higher than10 μmol/mol having been recorded in coke oven workers (Jongeneelen et al., 1990; Viau, 1999). Occupational exposure to polycyclic aromatic hydrocarbons (PAHs) is encountered in coke oven plants, the electrochemical industry, electrode factories, chrome smelting, and in various manufacturing plants (Ovrebo et al., 1995; Moto & Claassen, 2016). Some PAHs are used commercially in the agricultural, pharmaceutical and some chemical industries (Abdel-Shafy & Mansour, 2015).

The studies done in environments such as coke ovens, aluminium smelting and road paving showed that the amount of exposure to PAHs differs in the various work environments (see

table 1.3 in appendix) (Viau, 1999; Jeng et al., 2013; Kloslova et al, 2016). There are several studies that have found that employees working in different job categories within a work environment may have different levels of exposure to PAHs (Boogaard & van Sittert, 1995; Viau, 1999). Other factors that have been suggested to affect levels of PAH exposure in individuals employed in the same industry are: smoking, diet, and heating. The additional contribution that each makes, however, is not apparent in some studies.

The number of workers potentially exposed to PAHs may run into tens of thousands (Unwin et al., 2006). However, there is very little data on the presence of PAHs in the South African environment and the rest of Africa (Quinn et al., 2009). Studies in Africa have confirmed exposure to PAHs from food and contamination of soil and air (Sibiya, 2013; Tuakuila, 2013; Olatunji, 2015). Of studies that have been published in South Africa (SA), we found a workplace-based study that documented air monitoring of PAHs in South African platinum mines (Geldenhuys et al., 2015). Despite an extensive search, we found only one study that was specific for exposure to PAHs in the chrome smelting industry (Moto & Claassen, 2017). The study, done in South Africa, documented PAH exposure in a small group of 31 workers from a chrome smelter. The study analysed urinary 1-OHP, smoking habits, personal hygiene practices, and the use of personal protective equipment (PPE) in only two groups of workers- casing welders and tappers. They found that casing welders' urine 1-OHP was significantly higher than that of tappers (mean: 6.2 +/- 3.1 and 2.2 +/- 2.3 µmol/mol creatinine, respectively). The urine 1-OHP levels in these workers were influenced by job category, but they were not affected by smoking (Moto & Claassen, 2017).

1.2.2.3 Other sources of variation of 1-OHP between individuals

The excretion of PAHs or their metabolites in urine or other body fluids may vary between individuals. This may be due to differences in the absorption, biotransformation, metabolism

and excretion of these substances. Metabolism of pyrene may be mediated by enzymes such as cytochrome p-450 1A1, which exhibits variation between individuals and inter-individually (Ovrebo et al., 1998; Pan et al., 1998; Wu et al., 1998; Jongeneelen, 2001; Kim, et al., 2013).

1.3 PROBLEM STATEMENT

Exposure to PAHs varies among individuals and by workplace, thus it is important to undertake both environmental monitoring and biologic monitoring to identify excessive exposures (Viau, 1999; Tuakuila et al., 2013). In workplaces such as coke oven and aluminium industries, several studies have documented results of environmental and biologic monitoring of PAHs in the workplace. These studies have reported the amount of PAHs that the workers are exposed to, which have also been used to propose benchmark guidelines for a BEL relevant to these workplaces (Jongeneelen, 2001). It is thus important to analyse the results of environmental and biologic monitoring of PAHs in other industries associated with exposure to PAHs such as chrome smelting plants. However, to our knowledge, there is very limited data on the evaluation of the amount of exposure to PAHs among workers at ferrochrome plants in South Africa and internationally.

1.4 RESEARCH QUESTION

What is the overall exposure to PAHs, and factors that contribute to it, among workers at a chrome smelting plant in South Africa?

1.5 JUSTIFICATION OF THE STUDY

To our knowledge, there is very limited data on the evaluation of the amount of exposure to PAHs among workers at chrome smelting plants in South Africa and internationally. This

information is important for assessing the relevance and adequacy of measures to control PAH exposure in the workplace.

1.6 AIM AND SPECIFIC OBJECTIVES

The study aims to describe the total exposure to PAHs among workers at a chrome smelting plant in South Africa; the contribution of various sources to overall exposure to PAHs; and analyse trends in urine 1-OHP levels over a period of four years (2012-2015).

Specific objectives:

- To describe the total exposure to PAH, measured by urine levels of biomarker 1-hydroxypyrene.
- To describe workplace environmental exposure to PAH, measured by personal air levels of Coal Tar Pitch Volatiles as Benzene Soluble Matter (CTPV as BSM), and to determine the relationship between air CTPV and work area/characteristics.
- To evaluate the relationship between 1-OHP: and work area/characteristics; and personal characteristics.
- To analyse trends in urine 1-OHP levels over a period of four years (2012-2015).

CHAPTER 2: METHODOLOGY

2.1 STUDY DESIGN AND DATA SOURCE

The present investigation is a retrospective record review of CTPV (PAH) monitoring of workers at a ferrochrome plant. The data is from the yearly routine medical surveillance (health monitoring) of the employees, which is done on behalf of the chrome smelter, by a Private Healthcare company and a Private Occupational Hygiene and Environmental Services company. The biologic monitoring samples were collected by the Private Healthcare Company, and analysed by a Private Laboratory. The personal air monitoring was conducted by a Private Occupational Hygiene and Environmental Services company, and samples were analysed by a Private Laboratory.

2.2 STUDY SETTING

The study participants are workers at a chrome smelting plant in South Africa. The data also included a group of employees within the same workplace, classified as the PM (paste making) department, who are mainly involved in electrode paste-making. This smelting plant produces charge chrome and medium carbon ferrochrome which is used in the foundry and the stainless steel industry. The technology deployed in this process is both open and closed Submerged Arc Furnaces (SAF). The operation of these SAF involves both manual and automated processes.

Furnaces A, C, and F are open (no roof and enclosed walls); and furnaces D and E are closed. Furnace 3IC is a furnace that was in use previously, but was demolished.

Within the workplace there are several designated work areas which are designated as departments [Paste making- PM; 3IC; Furnaces; Logistics, Safety Health Environment and Quality/ Laboratory (SHEQ/ Lab); Pelletizing; Human Resource-HR; and Spillage Cleaning

Services (SCS)]. Within a department there are employees that work in similar processes, designated as sections (Production, Maintenance, SHEQ/ Lab, Admin/ similar). Each employee in the section has a job description, and some of these job descriptions are similar across the various departments. The organization of work areas into departments, sections, and job descriptions is shown in Table 2.1.

The level of exposure to PAHs is regarded as similar within a section in a given department.

During chrome smelting and electrode paste-making PAHs are produced, which require biologic and environmental monitoring according to the South African Regulations for Hazardous Chemical Substances (from the Occupational Health and Safety Regulations Act 85 of 1993). The environmental monitoring was carried out once yearly (legal requirement is at least every 2 years). Biologic monitoring (urine 1-OHP) measurements were carried out once yearly, unless if levels exceeded 2.7 µmol/mol creatinine(Cr) , then they were repeated immediately based on the protocol outlined in table 2.2. Biologic monitoring data consisted of: measurement of urine 1-OHP, unique number; department; section; and job description. Environmental monitoring was carried out by measurement of PAHs (using surrogate marker Coal Tar Pitch Volatiles as Benzene Soluble Matter -CTPVs as BSM) in personal air samples. A self-administered health questionnaire, filled in by individual employees, enquired about personal characteristics that could potentially contribute to PAH exposure outside the workplace. The health questionnaire formed part of the medical history taking, consent for which was requested formally on employment, and then the specific completed form was signed by the individual employee after completion.

Table 2.1 shows the organization of work areas into departments, sections, and job descriptions.

Table 2.1: Organization of Work areas into departments, sections, and job descriptions		
Department	**Section**	**Job description**
PM	Production	Production operator, production planner, calcine operator, production superintendent, production supervisor, shift supervisor, paste maker
	Maintenance	Instrumentation, apprentice, boilermaker, electrician, fitter, millwright, maintenance co-ordinator, maintenance supervisor, maintenance superintendent, maintenance planner
	SHEQ/Lab	Lab- operator, specialist, analyst, co-ordinator. SHEQ practitioner
	Finance/Admin	Finance/admin practitioner, finance supervisor, finance practitioner
	Marketing	Marketing- co-ordinator, superintendent. Procurement co-ordinator
3IC	Production	Production-operator, attendant
	Maintenance	Fitter, apprentice, boilermaker, electrician, maintenance supervisor, maintenance superintendent, maintenance practitioner
	Granulation/Production	Granulation- operator, supervisor
Furnaces	Production	Production operator, casing welder
	Maintenance	Fitter, maintenance superintendent
Logistics	Logistics	Logistics operator
SHEQ	Lab	Lab- operator, specialist, analyst, co-ordinator, practitioner. SHEQ practitioner
Pelletizing	Production	Shift supervisor
SCS (Spillage Cleaning Services)	Production	Production operator
Human Resource		

***Biological monitoring is carried out on employees from all departments as they all work in close proximity to each other.**

Table 2.2 shows the biological monitoring of CTPV, how exposure is graded, and action plan taken.

Table 2.2: Biological monitoring of CTPV- Grading of exposure and action plan

Urine 1-hydroxpyrene (µmol/mol crea)	**Assessment**	**Action plan**
0.0-0.44	Not industrially exposed, excellent,	Retest according to HRA job category
0.45-1.3	Industrially exposed, accept	Test annually
1.4-2.7	Benchmark of 1.4 exceeded, action level	Test annually, investigate exposure and controls Submit written report
2.8-4.1	Benchmark of 1.4 exceeded twice	Retest immediately investigate exposure and controls Submit written report
4.2 and higher	Benchmark of 1.4 exceeded three times plus	Retest immediately, investigate all domestic and engineering exposure and controls Submit written report

2.3 STUDY POPULATION AND SAMPLE

The study population consisted of men and women who were monitored for exposure to CTPVs in a chrome smelting plant. The record of the total number of employees at the plant, and how the employees chosen for the study were sampled, was not available. **For analysis of urine 1-OHP:** A total of 387complete records, of the 397 records received, were used which consisted of records of 108, 100, 78, and 101 employees in 2012, 2013, 2014, and 2015 respectively. We received a total of 86 questionnaires which consist of records of 19, 34, and 33 employees in 2012, 2013, and 2014 respectively (the numbers varied for the different questions in the questionnaires). The workers included casing welders, operators, maintenance workers, and supervisors. **For analysis of air PAH/ CTPV:** A total of 39 records for PAH monitoring (CTPV as BSM) were analysed which consist of records of 11, 12, 10, and 6 employees in 2012, 2013, 2014, and 2015 respectively. After we combined (appended) the data for 2012-2015, we had 335 entries (employees that had measurements for 2 or more years). **For the final analysis of urine 1-OHP trends:** A total of 332 complete records, of the 335 records, were used which consisted of records of 82, 93, 73, and 84 employees in 2012, 2013, 2014, and 2015 respectively.

Sampling was not applicable to this study. The analysis was of the entire workforce for which workplace monitoring was supplied by the company.

Table 2.3 summarizes the record of data received versus data analysed.

Table 2.3: Record of data received versus data analysed

Variable/ covariate (Years)	Urine 1-OHP monitoring (2012-2015)	Questionnaires (2012-2014)	Air PAH/ CTPV monitoring (2012-2015)
Data entries	N (objective used for)	N (objective used for)	N (objective used for)
Total received	397 (baseline work areas)	86	39
Total used for analysis	387 complete records (objective 1)	86 (objective 3)	39 (objective 2)
Total Combined (appended) data 2012-2015	335	-	-
Combined (appended) data used for analysis 2012-2015	332 complete records (baseline department-section, objective 3 & 4)	-	-

For analysis of urine 1-OHP:

The employees belonged to the following departments:

PM (paste-making); furnace A/B/C; furnace F; furnace 3IC; furnace C/F/3IC; furnace D/E; Pelletizing; Lab/SHEQ (Laboratory/ Safety Health Environment and Quality); Logistics; HR (Human Resource); SCS (spillage cleaning services). Some of the departments differed over the years, and others only appeared in some of the years.

- Furthermore, the PM department was recoded and subdivided as a unit into: PM production, PM maintenance, PM SHEQ/lab, PM admin.

The employees were subdivided into the following sections: production; maintenance; lab/ SHEQ; and admin/ similar (finance, marketing and logistics).

The job descriptions are as shown in table 2.1.

For analysis of air PAH/ CTPV:

The employees were from the following departments:

- 2012 (furnace C, furnace D, furnace E , furnace F, final product, and raw)
- 2013 (furnace D, furnace E , furnace F, 3IC, raw/ control)
- 2014 (tapping, furnace F, furnace 3IC granulation, and furnace 3IC production)
- 2015 (furnace A and furnace C).

The employees had the following job descriptions:

- 2012 (casing welder, controller, fitter, furnace operator, operator, section controller, and tapper)
- 2013 (crane operator, raw attendant)
- 2014 (furnace operator, raw operator, slag runner, granulation operator, and tapper)
- 2015 (tapper and co-ordinator).

(The recoding of the variables will be explained later)

2.4 MEASUREMENTS

The information that was extracted from the employees' medical surveillance (health) records for 2012 to 2015 was the information used for monitoring of PAHs/ CTPV at the smelting plant. This consisted of: employee unique number; department; section; job description; urine 1-OHP results; questionnaires; and CTPV environmental monitoring results.

2.4.1 Measurement of urine 1-OHP

The yearly biologic monitoring was done by measuring the urine levels of a surrogate marker for PAHs called 1-OHP. A midstream urine sample was obtained post- shift at the end of the working week. The measurement of1-OHP was done using high performance liquid chromatography. There is no Biologic Exposure Limit (BEL) that has been set. We received a total of 387 complete records for 1-OHP which were for 108, 100, 78, and 101 employees for 2012, 2013, 2014, and 2015 respectively.

2.4.2 Health questionnaire

A total of 86 questionnaires were obtained, which consisted of records for 19, 34, 33 employees in 2012, 2013, and 2014 respectively. No questionnaires were available for 2015. It is not clear why the records for 2015 were not available. The self-administered health questionnaires had been filled out by individual employees to determine the amount of possible exposure to PAHs outside the workplace. The questionnaire was completed as part of the medical history taking when employees had their annual medical surveillance (see Appendix C for a reproduction of the health questionnaire). A general consent form is signed at the first encounter at the clinic regarding examinations of medical surveillance and testing for workplace exposures (see Appendix B for a sample of the relevant portion of the consent form). The variables that had been collected were: department, job description, smoking history, heating facilities used at home, ventilation in sleeping area, cooking facility at home, and cooking method of food that they ate that week. For the smoking history employees were asked whether they smoked (yes/no), and if they smoked to indicate the number of cigarettes per day and the length of time they had been smoking. Options for the question "heating facilities at home" were: open/coal fire; or gas/electric heater. The employees had an option of answering "yes/no" to the question "is your sleeping area well-ventilated". The options for "cooking facility at home" were: coal stove; or gas/electric stove. The question "food that you ate this week" had 3 categories (cooked, boiled and grilled) to which they had an option of answering "yes/no" for each category.

2.4.3 Measurement of Air PAH

The environmental monitoring was carried out by measurement of PAHs, using CTPV as BSM as a surrogate marker, in personal air samples using a dust pump with PTFE filter. The measurements were performed yearly by a private Occupational Hygiene and Environmental

Services company. The personal air samples were taken over a single 8-hour shift (one sample per worker tested), but not all the workers were tested on the same day/shift. The measurements were done over two weeks in 2012-2014; and over two consecutive days covering different shifts in 2015. The samples were taken according to NIOSH Method 5515 [using "Gillian Gil-Air battery operated constant flow pumps 37mm diameter, 3µm pore size, PTFE filters; washed XAD-2 tubes (100mg/50mg); 37mm filter support pads; 37mm Gelman sampling heads (3-tiered cassettes); Gillian Gilibrator electronic airflow calibrator"] (Occupational hygiene report from the private Occupational Hygiene and Environmental Services company). A Private Laboratory analysed the samples using gas chromatography mass spectrometry. One total air exposure estimate was calculated for each worker on the sampling day by adding the particulate and vapour measurements.

The eight-hour time weighted average (8-hr-TWA) measurement for CTPV as BSM was used (The 8-hr-TWA is the employee's average airborne exposure in any 8-hour work shift of a 40-hour work week).The Occupational Exposure Limit that they used was the Occupational Exposure Limit - recommended limit (OEL-RL) which is 0.14 mg/m^3 for an 8-hr-TWA (Occupational Health and Safety Act, 1993). Two types of OELs are defined: OEL-RL and OEL-CL (Occupational Exposure Limit - control limit). OEL-RL is set at a level at which there is no indication of a risk to health, whereas the OEL-CL is set at a level which there may be residual risk since it takes into account socioeconomic factors. When analysing the results of the environmental monitoring, another reading that is noted is the action level, which is regarded as 50% of the OEL. The action level is the personal air monitoring result at which it is recommended that action be taken to lower the level of exposure (e.g. measures to reduce exposure are checked and assessed to see if they are adequate), to prevent levels from reaching the OEL.

2.5 DATA MANAGEMENT AND ANALYSIS

All analyses were conducted using Stata version 15 (StataCorp LP College Station, TX). Data cleaning included: checking for missing values using frequency checks for categorical variables and range checks for continuous variables; and recoding and categorizing of variables. The following variables were recoded into more meaningful categories: 1-OHP results, work section, job description, smoking duration, heating at home, cooking facility, cooking method of food eaten that week.

Table 2.4 summarizes the data management and analysis steps, statistics/ tests, and the rationale for the choice. Univariate (univariable), bivariate, and multivariable analysis were performed to achieve the objectives of the study.

Table 2.4: Data management and analysis steps, statistics/ tests, and rationale

Data management/ analysis step	Statistics/ test	Rationale for the choice
Data cleaning	Frequency checks; range checks; recoding	Prepare data for analysis
Univariate analysis **(baseline work characteristics)**	Frequency tables	Descriptive statistics- to summarize Categorical variables
Univariate analysis **(other variables)**	Frequency tables	Descriptive statistics- to summarize Categorical variables
	Summary statistics	Descriptive statistics-to summarize Continuous variables
Bivariate analysis	Fisher's exact test	Determine relationship between 1-OHP and work area/personal characteristics. Outcome variable (urine 1-OHP) in 2 categories, and some cells with numbers <5.
	Kruskal-Wallis test	Determine relationship between air PAH/ CTPV and other variables. Outcome variable (air PAH/CTPV)-continuous variable, and not normally distributed.
Multivariable analysis (appended data)	Multilevel Mixed tobit model (appended data)	Determine trends in 1-OHP over time, adjusted for department-section. Data correlated & censored

2.5.1 Data management: Outcome of interest

Outcome of interest was Urine 1-OHP. Urine 1-OHP results for 2012 were provided as an ordinal variable with 5 categories (in µmol/mol creatinine (Cr)) [**1**(0.0-0.44); **2**(0.45-1.3);

3(1.4-2.7); **4**(2.8-4.1); **5**(4.4 or higher)].The variable was recoded into 2 categories [**1**(0.0-1.3); **2**(1.4 or higher)], based on the no observed genotoxic effect benchmark of 1.4 μmol/mol creatinine (Cr). However, 1-OHP results for 2013-2015 were provided as both an ordinal variable (5 categories) and continuous variable. The ordinal variable was also recoded into 2 categories similar to 2012.

2.5.2 Data management: Other covariates

Other covariates were: work section, department, job description, smoking, smoking duration, number of cigarettes smoked per day, heating at home, ventilation in sleeping area, cooking facility, and cooking method of food eaten that week.

The following covariates were recoded:

For 2012: The 7 sections (admin, granulation, lab, maintenance, marketing, production, and SHEQ) were recoded to 4 sections (production, maintenance, lab/ SHEQ, admin/ similar) based on workplace PAH exposure.

The 23 original job titles were: Admin Practitioner, Apprentice, Boilermaker, Casing Welder, Electrician, Fitter, Granulation Operator,, Granulation Supervisor, Lab Analyst, Lab Operator, Lab Specialist, Millwright, Maintenance Practitioner, Maintenance Supervisor, Maintenance Welder, Marketing Coordinator, Operator, Planner, Production Attendant, Production Operator, Production Supervisor, SHEQ Practitioner, and Superintendent. These were recoded into 10 job titles: Production Operator/ similar, Lab Operator/ similar, Electrician, Millwright, Boilermaker, Production Supervisor/similar, Casing Welder, Fitter, Maintenance/ planner, admin/other.

For 2013: The 9 sections (admin, finance, HR, lab, logistics, maintenance, marketing, operations, and production) were recoded to 4 sections (production, maintenance, lab/ SHEQ, admin/ similar) based on workplace PAH exposure.

The 25 original job titles were: Finance Superintendent, Apprentice, Boilermaker, Casing Welder, Electrician, Finance Practitioner, Fitter, Lab Co-ordinator, Lab Operator, Lab Specialist, Logistic Operator, Millwright, Maintenance Co-ordinator, Maintenance Superintendent, Maintenance Supervisor, Marketing Superintendent, Marketing Coordinator, Operations Manager, Planner, Process Specialised, Production Superintendent, Production Operator, Production Supervisor, SHEQ Practitioner, Shift Superintendent. These were recoded into 10 job titles: Production Operator/similar, Lab Operator/ similar, Electrician, Millwright, Boilermaker, Production Supervisor/ similar, Casing Welder, Fitter, Maintenance/ Planner, Admin/other.

For 2014: The 7 sections (admin, granulation, lab, maintenance, marketing, production, and SHEQ) were recoded to 4 sections (production, maintenance, lab/ SHEQ, admin/ similar) based on workplace PAH exposure.

The 27 original job titles were: Boilermaker, Casing Welder, Electrician, FA Practitioner, FA Superintendent, Fitter, Instrumentation, Lab Co-ordinator, Lab Operator, Lab Practitioner, Lab Specialist, Logistic Supervisor, Maintenance Co-ordinator, Maintenance Instrumentation, Maintenance Planner, Maintenance Super, Maintenance Supervisor, Marketing Super, Millwright, Process Specialist, Procure Coordinator, Production Manager, Production Operator, Production Student, Production Superintendent, Production Supervisor, SHEQ Practitioner. These were recoded into 10 job titles: Production Operator/similar, Lab Operator/ similar, Electrician, Millwright, Boilermaker, Production Supervisor/ similar, Casing Welder, Fitter, Maintenance/ Planner, Admin/other.

For 2015: The 6 sections (lab, maintenance, marketing, production, OPS and SHEQ) were recoded to 4 sections (production, maintenance, lab/ SHEQ, admin/ similar) based on workplace PAH exposure.

The 25 original job titles were: Boilermaker, Calcine Operator, Casing Welder, Dispatch Operator, Electrician, Fitter, Lab Co-ordinator, Lab Operator, Lab Practitioner, Lab Specialist, Maintenance Co-ordinator, Maintenance Planner, Maintenance Specialist, Maintenance Super, Maintenance Superintendent, Maintenance Supervisor, Marketing Super, Millwright, Operations Manager, Paste Maker, Process Specialist, Production Operator, Production Superintendent, Production Supervisor, SHEQ Practitioner. These were recoded into 10 job titles: Production Operator/similar, Lab Operator/ similar, Electrician, Millwright, Boilermaker, Production Supervisor/ similar, Casing Welder, Fitter, Maintenance/ Planner, Admin/other.

The variable "cigarettes smoked per day" was recoded into 2 categories (0-10 and 11-20/day).

The variable "smoking duration" was recoded into 3 categories (0-10; 11-20 and >20years).

The variable "type of heating" (at home) was recoded into 3 categories (open/ coal fire; gas/ electric; and all types).

The variable "cooking facility" was recoded into 3 categories (coal stove; gas/ electric stove; and both).

For food preparation method, the 3 categories (cooked, boiled, and grilled) were recoded into 2 categories (cooked and/ boiled; and grilled/ grilled and other).

2.5.3 Data management: Air PAH

Air PAH results were measured as 8-hr time weighted average (8-hr-TWA) using surrogate marker CTPV as BSM. The results for 2012-2015 were provided as continuous data for 39 employees. Units for total air exposures were reported in mg/m^3.

For 2012: The 10 departments (furnace C tap floor/break floor, furnace D tap floor/break floor, furnace E tap floor/break floor, furnace F tap floor/break floor, furnace F plant, final product/crusher, despatch/final product, lab/milling/crushing, raw/all, and crp/ all) were recoded to 6 departments (furnace C, furnace D, furnace E, furnace F, final product, and raw).

For 2013: The 9 departments (furnace D granulation, furnace E granulation, furnace F, furnace F ground, furnace F load/A1 hopper, outside, 3IC granulation, 3IC raw/loading, and raw/control) were recoded to 5 departments (furnace D, furnace E, furnace F, 3IC, and raw/ control).

For 2014: The 7 departments (furnace C tapping, furnace D tapping, furnace E tapping, furnace F tapping, furnace F control, 3IC granulation, and 3IC production) were recoded to 4 departments (Tapping, furnace F control, 3IC granulation, and 3IC production).

For 2015: The measurements were done in 2 departments: furnace A and furnace C. These were not recoded.

The job descriptions were: furnace operator, granulation operator, raw operator, slag runner, tapper, casing welder, controller, fitter, operator, section controller, crane operator, raw attendant and co-ordinator. These job descriptions were not recoded.

2.5.4 Data analysis:

Baseline work areas and personal characteristics

Frequency tables were used to describe: baseline work areas (department, section and job description for 397 entries); department-section (332 entries); and personal characteristics (86 entries) for 2012-2015.

All the data that was received was used to describe: the baseline work areas (department, section and job description for 397 entries); and personal characteristics (86 entries). Combined (appended) data was used to describe the baseline department-section (332 entries).

The data for the employees for 2012-2015 was combined (appended), and then duplicates were sought. The data for employees that had at least one repeat result for 1-OHP was kept. The initial combined (appended) data had 397entries, and the data with repeat measurements had 335 measurements of which 332 were complete.

A new variable for the year in which the measurements were taken was created. The years 2012-2014 were coded: “1” 2012; “2” 2013; “3” 2014; “4” 2015.

The variable “department” was recoded into a new variable “department-section” combining department and section variables to allow subdivision of the PM department. Thus the original departments were subdivided and recoded to (PM production, PM maintenance, PM SHEQ/lab, PM Admin, furnace C, furnace D/E, and furnace F).

Objective 1: To describe the total exposure to PAH, measured by urine levels of biomarker 1-hydroxypyrene.

Frequency tables were used to describe urine 1-OHP categorical results for 2012-2015. Since the 1-OHP results for 2013-2015 were also continuous data, and the data was not normally distributed, the median and interquartile range was calculated for each year.

***Objective 2*:** To describe workplace environmental exposure to PAH, measured by air levels (CTPV as BSM), and to determine the relationship between air CTPV and work characteristics.

Air PAH results for 2012-2015 were provided as continuous data for 39 employees, also including work departments and job descriptions.

Since the air PAH (CTPV as BSM) results were not normally distributed, the median and interquartile range was calculated for each year. A bivariate analysis of air CTPV and: job description; department, was also performed using the Kruskal Wallis test. We were not able to run a linear regression to determine the relationship (correlation) between biomarker (1-OHP) as a continuous dependent variable, and air PAH (CTPV as BSM) as a continuous independent variable as the air PAH levels did not have corresponding 1-OHP results.

***Objective 3*:** To evaluate the relationship between 1-OHP: and work areas; and personal characteristics.

The data was thus analysed with 1-OHP as a categorical variable since the results were available in their original format for all the years (2012-2015). Fisher's exact tests were computed to determine the relationship between biomarker (1-OHP) as a categorical dependent variable, and each categorical independent variable in turn. The independent categorical variables were: job section, smoking, heating at home, ventilation in sleeping area, cooking facility, and cooking method of food eaten that week. This was possible for each year from 2012 -2014.

Due to the limited data that we obtained from the questionnaires, we were not able to perform a multivariable regression analysis to determine the relationship between biomarker (1-OHP) as a categorical dependent variable, and all exposure variables that were statistically significant in the bivariate analysis.

***Objective 4*:** To analyse trends in urine 1-OHP levels over time.

Urine 1-OHP results were available as categorical results only for 2012; and as both categorical and continuous data for 2012-2015. In order to be able to analyse the data for urine biomarker 1-OHPas a continuous variable for all the years, the results for 2012 were imputed. The median for each category was imputed as the new value for 1-OHP. A histogram and sk-test of the results for urine biomarker 1-OHP showed that they did not follow a normal distribution. The machine that was used to measure urine 1-OHP levels has a lower limit of 0.1 i.e. the 1-OHP results are censored. This data was then used in a multilevel mixed-effects Tobit regression model (explained at 2.5.4.1 and summarized in table 2.4):

(i) Model 1: with 1-OHP continuous data as the dependent variable, and year (continuous) as independent variable; and

(ii) Model 2: with 1-OHP continuous data as the dependent variable, and year (categorical) as independent variable; and

(iii) Model 3: with 1-OHP continuous data as the dependent variable, and year (continuous) and department-section as independent variable

An AIC (Akaike's information criterion) and BIC (Bayesian information criterion) were performed to compare the models. Model 1 was better than Model 2, based on lower AIC and BIC. Thus, Year (as a continuous independent variable) was used in the final model 3, with SHEQ as reference group. SHEQ was used as the reference since they are the department with the lowest exposure.

Table 2.5 summarises the steps taken in choosing the final model for the multilevel mixed-effects Tobit regression analysis.

Table 2.5: Comparison of statistical models: analysis of trends in urine 1-OHP over time.

Model		Explanation	AIC	BIC
1	metobit Results Year || unique:, ll(0.1) cov (unstructured)	Model with Year as continuous variable	1124.98	1140.24
2	metobit Results i.Year || unique:, ll(0.1) cov (unstructured)	Model with Year as categorical variable	1125.27	1148.15
Model 1 is better, based on lower AIC and BIC				
Final model				
3	metobit Results Year ib11.(departmentn) || unique:, ll(0.1) cov (unstructured)	Model with Year as continuous variable, adjusted for department-section, using SHEQ(ib11) as reference group	1101.13	1150.60

***Results**= urine 1-OHP (continuous) results for 2012-2015* ***Year** = year result taken*

***Departmentn** = Work Department-Section* ***ib11** = SHEQ as reference group*

***Unique** = Unique Identifier*

***AIC** = Akaike's information criterion* ***BIC**= Bayesian information criterion*

2.5.4.1 Multilevel mixed Tobit regression

Multilevel mixed-effects Tobit regression is a type of regression analysis that is used to model (analyse) data that is correlated, and the dependent variable is censored (has an upper and / lower limit). The multilevel mixed-effects Tobit regression is discussed below based on its two components: Mixed effects (multilevel) models; and Tobit model.

Mixed effects (multilevel) models

Mixed effects models are one of the multivariable analysis methods that can adjust for the correlated nature of data (i.e. a type of regression analysis that is used to analyse correlated data). Correlated observations occur, for example, when repeated measurements are taken from the same individuals or the individuals are enrolled from groups such as families or

cities. Mixed effects models are also known by other names such as: multilevel; hierarchical; random-effects; random-coefficient models; repeated-measures models; or random regression models, which describes a certain aspect about them (Katz, 2011, pp 185-198).

Mixed-effects take into account fixed and random effects. The fixed effects describe the whole population similar to ordinary regression, whereas the random effect considers the variation across subgroups (Hamilton, 2009, p413). Multilevel data consist of observations that can be grouped in some way. Multi-level or hierarchical refers to their incorporation of "two or more levels of random variation where one level is higher than the other. For example, 1000 patients (level 1) may be cared for by one physician (level 2) working in one of 10 hospitals (level 3)" (Katz, 2011, p198). In the case of repeated measurements on the same individuals: the "repeated observations (level 1) are clustered at the "higher" level of the subject (level 2)" (Katz, 2011, p198).

Mixed-effects models can be used to analyse data for various distributions of the outcome such as: linear, binary, ordinal, count, and censored.

Tobit model

Tobit models can be used to model data that is censored. Censoring means that there is a predetermined upper and/ or lower limit (threshold) for the dependent variable. Thus the true value of cases that take on the value of the threshold might be equal to or higher (or lower) than the threshold. The censoring is termed left- or right-censoring, or censoring from below and above, respectively (UCLA, n.d.).

A model that is censored and also mixed/multilevel in nature is thus called a multilevel mixed Tobit model.

2.6 ETHICS

Permission to do this study was obtained from the Wits Human Research Ethics Committee (ethical clearance certificate number: M160842).

The data that is used in this research is data that was collected as part of the mandatory medical surveillance and environmental monitoring, done by a Private Healthcare company and a Private Occupational Hygiene and Environmental Services company, on behalf of the chrome smelter. The request for permission from the chrome smelter was sent via email, and the response was also obtained via email. All the documents with the specific names of the companies (Private Healthcare Company and chrome smelter) were submitted to the Wits Human Research Ethics Committee, however, they have been omitted in this report to anonymise the data. In this report: the exact location of the plant within South Africa and the names of the chrome smelter and other service providers are not stated; the exact names of the furnaces, PM department and SCS were coded; to maintain confidentiality and anonymity. Confidentiality of the study participants was ensured by removing any personal identifiers and anonymising the data.

2.7 DISSEMINATION OF RESULTS

The research report will be submitted to the Faculty of Health Sciences for degree purposes. The results will then be submitted to the company from which the data was obtained.

CHAPTER 3: RESULTS

3.1 INTRODUCTION

This chapter presents the results of the study. It will be followed by the discussion and conclusion chapters.

We will present the results of the statistical analysis of all the original data from the company, and the results of the analysis of the combined (appended) data for 2012-2015. Where the combined (appended) data are used, it will be indicated.

The chapter starts with a description of the baseline work areas and personal characteristics of the study population for 2012-2015, which describe: number of employees; job description; department; section; smoking history; heating facilities used at home; ventilation in sleeping area; cooking facility at home; and cooking method of food that they ate that week. This will be followed by results for: **OBJECTIVE 1**- description of the urine biomarker (1-OHP); **OBJECTIVE 2**- description of air monitoring (CTPV); then **OBJECTIVE 3**- bivariate analysis of 1-OHP (as a dependent variable) and other covariates. The chapter ends with results for **OBJECTIVE 4**: the results of the analysis of trends in 1-OHP over time (2012-2015), with and without adjusting for work department-section.

3.2 WORK AREAS AND PERSONAL CHARACTERISTICS

3.2.1 Distribution of employees in work areas (department, section, and job description)

We received urine 1-hydroxypyrene (1-OHP) results for 397 employees which were collected as part of the company's medical surveillance programme (for 2012 to 2015). These employees were those that worked in areas that were high risk for exposure to PAHs. However, we could not obtain the data for the total number of workers employed at the plant for each year.

The workplace is structured as follows: designated work areas which are termed departments; within a department there are employees that work in similar processes, designated as sections (Production, Maintenance, SHEQ/ Lab, Admin/ similar); and each employee in a section has a job description. Some of the job descriptions are similar across the various departments. The level of exposure to PAHs is regarded as similar within a section in a given department.

Table 3.1: Work department, section, and job description of employees (2012-2015)

Year (total number)	**2012** (111)		**2013** (102)		**2014** (83)		**2015** (101)	
Characteristic	**n**	**%**	**n**	**%**	**n**	**%**	**n**	**%**
Department								
PM	67	60.36	71	69.61	62	74.70	68	67.33
Furnace A/B/C	1	0.90	-	-	-	-	#3	2.97
Furnace E	2	1.80	-	-	1	1.20	3	2.97
Furnace 3IC	18	16.22	-	-	-	-	-	-
Furnace C/F/3IC	-	-	4	3.92	-	-	-	-
Furnace D/E	4	3.60	4	3.92	2	2.41	3	2.97
Pelletizing	-	-	1	0.98	-	-	-	-
Lab/SHEQ	17	15.31	19	18.63	16	19.28	22	21.78
Logistics	2	1.80	1	0.98	-	-	1	0.99
HR	-	-	2	1.96	2	2.41	-	-
SCS	-	-	-	-	-	-	1	0.99
Section*								
Production	54	48.65	57	55.88	40	48.19	54	53.47
Maintenance	33	29.73	26	25.49	22	26.51	23	22.77
Lab/ SHEQ	22	19.82	11	10.78	18	21.69	23	22.77
Admin/ Other	2	1.80	8	7.84	3	3.61	1	0.99
Job Description*								
Production Operator	43	38.74	46	45.10	32	38.55	34	33.66
Lab Operator	22	19.82	16	15.69	18	21.69	23	22.77
Electrician	8	7.21	6	5.88	4	4.82	4	3.96
Millwright	6	5.41	6	5.88	5	6.02	5	4.95
Boilermaker	7	6.31	3	2.94	3	3.61	3	2.97
Production Supervisor	7	6.31	8	7.84	3	3.61	9	8.91
Casing Welder	5	4.50	2	1.96	3	3.61	9	8.91
Fitter	5	4.50	2	1.96	2	2.41	4	3.96
Maintenance/ Planner	6	5.41	7	6.86	8	9.64	8	7.92
Admin/ Other	2	1.80	6	5.88	5	6.02	2	1.98

*Recoded data

SCS (Spillage Cleaning Services) - company that cleans spillages and walkways; **Lab-** laboratory; **SHEQ**- Safety, Health, Environment and Quality; **HR**- Human resource; **Furnace 3IC**- furnace was demolished and a new furnace C built

Table 3.1 summarizes the number and percentages of employees in the various work departments, sections, and job descriptions for 2012-2015. The data is presented per year for each department, section and job description.

Overall: Work areas of employees for 2012-2015

Over the four years in which data was collected, the number of employees tested and the grouping per department/ section differed, resulting in different numbers tested per year (111in 2012; 102 in 2013; 83 in 2014; and 101 in 2015). Most of the employees tested for 1-OHP worked in: the PM Department, followed by Lab/ SHEQ; and the production and maintenance sections. Of the 10 recoded job titles, the majority of employees tested worked as production operators, followed by lab operators.

In 2012:

The observations of 111 employees were analysed. Most of the employees worked in: the PM Department (60.36%); followed by Lab/SHEQ (15.31%); and the production (48.65%) and maintenance (29.73%) sections. Of the 10 job titles, the majority of employees worked as production operators (38.74%), followed by lab operators (19.82%).

In 2013:

The observations of 102 employees were analysed. Most of the employees worked in: the PM Department (69.61%), followed by Lab/SHEQ (18.63%); and the production (55.88%); and maintenance (25.49%) sections. Of the 10 job descriptions, the majority of employees worked as production operators (45.10%), followed by lab operators (15.69 %).

In 2014:

The observations of 83 employees were analysed. Most of the employees worked in: the PM Department (74.7%), followed by Lab/SHEQ (19.28%); and the production (48.19%) and maintenance (26.51) sections. Of the 10 job descriptions, the majority of employees worked as production operators (38.55%), followed by lab operators (21.69%).

In 2015:

The observations of 101 employees were analysed. Most of the employees worked in: the PM Department (67.33%), followed by Lab/SHEQ (21.78%); and the production (53.47%), maintenance (23%) and lab/SHEQ (23%) sections. Of the 10 job titles, the majority of employees worked as production operators (33.66%), followed by lab operators (22.77%).

There were a large number of departments and only a few people in each, thus not useful for further analysis. The departments were also not consistent for the years 2012-2015. Job descriptions were not useful for further analysis either as the majority were production operators and worked in the two different production areas, thus a new variable (department-section) was created from the appended data.

3.2.2 Distribution of employees in work areas (department and section combined)

Table 3.2: Descriptive statistics for work Department-Section (combined data for 2012-2015)

Year (total number)	**2012** (82)		**2013** (93)		**2014** (73)		**2015** (84)	
Characteristic	**n**	**%**	**n**	**%**	**n**	**%**	**n**	**%**
Department-Section**								
PM production	40	48.78	41	44.09	36	49.32	36	42.86
PM Maintenance	15	18.29	22	23.66	13	17.81	19	22.62
PM SHEQ	3	3.66	3	3.23	2	2.74	2	2.38
PM Admin	2	2.44	4	4.30	3	4.11	1	1.19
Furnace C	1	1.22	-	-	-	-	1	1.19
Furnace D/E	4	4.88	4	4.30	2	2.74	3	3.57
Furnace F	-	-	2	2.15	1	1.37	2	2.38
SHEQ	17	20.73	17	18.28	16	21.92	20	23.81

**Recoded data combining department and section.

Table 3.2 presents the descriptive statistics for the merged variable "Department-Section" (combining department and section). The data is from the combined (appended) data for 2012-2015, presented for each year.

The observations of 332 employees were analysed [in: 2012 (82); 2013 (93); 2014 (73); and 2015 (84)]. The employees worked in the following department-sections: PM production, PM Maintenance, PM SHEQ, PM Admin, furnace C, furnace D/E, furnace F, and SHEQ. There were no measurements for furnace C for two years. Overall, most of the employees worked in PM production, followed by SHEQ and PM Maintenance. This result is very similar to the baseline work characteristics in the original data.

3.2.3 Description of personal characteristics (potential sources of exposure to PAHs outside the workplace for 2012- 2014)

Table 3.3: Description of personal characteristics (2012- 2014)

Year	2012		2013		2014	
Characteristic	n	%	n	%	n	%
Smoking						
No	15	78.95	21	63.64	22	66.67
Yes	4	21.05	12	36.36	11	33.33
Total	19	100	34	100	33	100
Cigarettes smoked/day						
0-10	1	25.00	6	54.55	3	30.00
11-20	3	75.00	5	45.45	7	70.00
Total	4	100	11	100	10	100
Smoking Duration						
0-10	1	25.00	2	25.00	3	27.27
11-20	3	75.00	4	50.00	6	54.55
>20	0	0	2	25.00	2	18.18
Total	4	100	8	100	11	100
Type of heating						
Open/ Coal fire	1	7.14	1	4.55	1	4.35
Gas/ Electric	13	92.86	20	90.91	21	91.30
All types	0	0	1	4.55	1	4.35
Total	14	100	22	100	22	100
Ventilation in sleeping area						
Yes	11	84.62	16	76.19	23	85.19
No	2	15.38	5	23.81	4	14.81
Total	13	100	21	100	27	100
Cooking Facility						
Coal stove	2	11.11	1	3.57	1	3.33
Gas/ Electric Stove	16	88.89	25	89.29	29	96.67
Both	0	0	2	7.14	0	0
Total	18	100	28	100	30	100
Food preparation method						
Cooked	8	42.11	15	51.72	15	46.88
Cooked, Boiled	4	21.05	3	10.34	4	12.50
Cooked, Boiled, Grilled	4	21.05	5	17.24	8	25.00
Cooked, Grilled	2	10.53	3	10.34	3	9.38
Boiled	1	5.26	1	3.45	1	3.13
Grilled	0	0	2	6.90	1	3.13

Total	19	100	29	100	32	100
Food preparation method (in 2 categories)						
Cooked and/ Boiled	13	68.42	19	65.52	20	62.50
Grilled/ grilled and other	6	31.58	10	34.48	12	37.50
Total	19	100	29	100	32	100

The descriptive statistics for personal characteristics that are possible sources of exposure to PAHs outside the workplace for the years 2012- 2014 are shown in Table 3.3.

Most respondents: were non-smokers; used gas or electric for heating and cooking at home; slept in a ventilated room; and ate food that is cooked/boiled.

Descriptive statistics for personal characteristics (2012)

Questionnaires that were available for analysis in 2012 were for 19 employees. Of those 19 employees, 15 (78.95%) were non-smokers. Seventy-five percent (75%) of the smokers smoked 11-20 cigarettes per day, with 75% also having smoked for 11-20 years. Fourteen employees responded to the question on heating at home. Of those who responded, the majority (92.86%) used gas or electric for heating. Thirteen employees responded to the question on ventilation in the sleeping area and, of those, the majority (84.62%) slept in a ventilated room. Most (88.89%) of the respondents used gas or electric stoves to cook at home. The type of food that they ate in that week included: cooked, boiled, and grilled. Most respondents ate food that is cooked and/boiled (68.42%), with 31.58% reporting to have food that is grilled in combination with cooked and / boiled.

Descriptive statistics for personal characteristics (2013)

Questionnaires that were available for analysis in 2013 were for 34 employees. Of those 34 employees, 21 (61.76%) were non-smokers with one invalid response. The 12 smokers smoked from three to 20 cigarettes per day, and had smoked for 10 to 36 years. One smoker did not indicate the number of cigarettes smoked per day, and four did not indicate how long they had been smoking for. Fifty-five percent of the smokers smoked less-than-or-equal-to (</=) ten cigarettes per day, with 25% also smoking for </=10 years. Twenty-two employees

responded to the question on heating at home. Of those who responded, the majority (90.91%) used gas or electric for heating. Twenty-one employees responded to the question on ventilation in the sleeping area and, of those, the majority (76.19%) slept in a ventilated room. Most (89.29%) of the respondents used gas or electric stoves to cook at home. The type of food that they ate in that week included: cooked, boiled, and grilled. Most respondents ate food that is cooked/boiled (65.52%), with 34.48% reporting to have food that is grilled/ grilled in combination with other food preparation methods.

Descriptive statistics for personal characteristics (2014)

Questionnaires that were available for analysis in 2014 were for 33 employees. Of those 33 employees, 22 (66.67%) were non-smokers. The 11 smokers had smoked for 10 to 22 years, with most (55%) of them having smoked for 11-20 years. One smoker did not indicate how many cigarettes they smoke/day. The 10 smokers smoked from five to 20 cigarettes/ day; with the majority (70%) having smoked 11-20 cigarettes/day. Twenty-three (70%) employees gave a valid response to the question on heating at home. Of those who responded, the majority (91.30%) used gas or electric for heating. Twenty-seven employees gave a valid response to the question on ventilation in the sleeping area and, of those, the majority (85.19%) slept in a ventilated room. Of the 30 valid responses, most (96.67%) of the respondents used gas or electric stoves to cook at home. The type of food that they ate in that week included: cooked, boiled, and grilled. Most respondents ate food that is cooked/boiled (62.50 %), with 37.50% reporting to have food that is grilled/ grilled in combination with other food preparation methods.

OBJECTIVE 1:

3.3 DESCRIPTION OF URINE BIOMARKER 1-OHP

The urine 1-OHP results were provided as: categorical data for 2012-2015; and continuous data for 2013-2015. The 1-OHP categories [in µmol/mol creatinine (crea.)] were: 1(0.0 – 0.24); 2 (0.25 – 1.3); 3 (1.4 – 2.7); 4 (2.8 – 4.1); and 5 (4.2 and higher). The categorical results were recoded into two groups using the benchmark guideline of 1.4µmol/mol: A (category 1-2) and B (category 3-5). A histogram and sk-test of the continuous results showed that all the results for 1-OHP were not normally distributed, thus a median (interquartile range; IQR) were calculated.

Table 3.4 summarizes the results of the univariable analysis of the urine biomarker (1-hydroxypyrene) for each year from 2012 to 2015.

Table 3.4: Description of 1-OHP results (in µmol/mol creatinine) for 2012-2015

Year (total number)	**2012** (108)		**2013** (100)		**2014** (78)		**2015** (101)	
Characteristic								
1-OHP results (Categorical)	**n**	**%**	**n**	**%**	**n**	**%**	**n**	**%**
Category 1-2	92	85.19	73	73	58	74.36	73	72.28
Category 3-5	16	14.81	27	27	20	25.64	28	27.72
Category 1	39	36.11	21	21	14	17.95	16	15.84
Category 2	53	49.07	53	53	46	58.97	57	56.44
Category 3	12	11.11	19	19	14	17.95	11	10.89
Category 4	-	-	5	5	3	3.85	11	10.89
Category 5	4	3.7	2	2	1	1.28	6	5.94
1-OHP results (Continuous)								
Median	-		1		1		1	
Range	-		0.1-8.4		0.1- 4.3		0.1- 9	
IQR	-		0.5;1.4		0.6; 1.4		0.9; 1.5	

-No results as continuous data for 2012

Overall: from 2012 to 2015, 14.81 to 27.72% of employees had urine 1-OHP results above the "no-observed-effect-level of genotoxic effect" benchmark guideline of 1.4µmol/mol crea.

(Category 3-5). Of those, 1.28% to 5.94% had urine 1-OHP results above 4.1µmol/mol crea. [A Biological Monitoring Guidance Value (BMGV) of 4.0 µmol/mol creatinine has been set by the British Health & Safety Executive (HSE)]. The median 1-OHP for 2013-2015 was the same (1µmol/mol crea.), with a similar interquartile range (IQR), but a variation in the range over the same years. The highest 1-OHP results were recorded in 2013 and 2015.

Descriptive statistics of 1-OHP (2012)

The urine 1-OHP results for 108 employees for 2012 were provided as categorical data. Urine 1-OHP results were missing for 3 employees. Most of the employees had urine 1-OHP results in category 2 (n= 53; 49.07%), with the lowest number of results in category 5(n= 4; 3.70%). Eighty-five point thirty-two percent (85.32%) of employees had results below the "no-observed-effect-level of genotoxic effect" benchmark guideline of 1.4µmol/mol crea. (Category 1-2), and 14.81% had results above the "no-observed-effect-level of genotoxic effect" benchmark guideline of 1.4µmol/mol crea.(category 3-5), and 3.70% had urine 1-OHP results above 4.1µmol/mol crea. (Category 5) [Biological Monitoring Guidance Value (BMGV) of 4.0 µmol/mol crea. has been set by the British Health & Safety Executive (HSE)].

Descriptive statistics of 1-OHP (2013)

The urine 1-OHP results for 100 employees for 2013 were provided as categorical and continuous data. Urine 1-OHP results were missing for two employees.

Most of the employees had urine 1-OHP results in category 2(n= 53; 53%), with the lowest number of results in category 5(n=2; 2%). Seventy-three percent (73%) of employees had results below the "no-observed-effect-level of genotoxic effect" benchmark guideline of 1.4µmol/mol crea. (Category 1-2), whilst 27% had results above the "no-observed-effect-

level of genotoxic effect" benchmark guideline of 1.4µmol/mol crea.(category 3-5). Two percent (2%) had urine 1-OHP results above 4.1µmol/mol crea. (Category 5) [BMGV of 4.0 µmol/mol crea. has been set by the HSE].

1-OHP Continuous data: The data was skewed with a median of one, which is below the cut off for excess exposure.

Descriptive statistics of 1-OHP (2014)

The urine 1-OHP results for 78 employees for 2014 were provided as categorical and continuous data. Urine 1-OHP results were missing for five employees.

1-OHP Categorical data: Most of the employees had urine 1-OHP results in category 2(n= 46; 58.97%), with the lowest number of results in category 5(n= 1; 1.28%). Seventy-six point ninety-two percent (76.92%) of employees had results below the "no-observed-effect-level of genotoxic effect" benchmark guideline of 1.4µmol/mol crea. (category 1-2), whilst 25.64% had results above the "no-observed-effect-level of genotoxic effect" benchmark guideline of 1.4µmol/mol (category 3-5). One-point-two-eight percent (1.28%) had urine 1-OHP results above 4.1µmol/mol crea. (category 5) [BMGV of 4.0 µmol/mol crea. has been set by the HSE].

1-OHP Continuous data: the median remained the same as the previous year.

Descriptive statistics of 1-OHP (2015)

The urine 1-OHP results for 101 employees for 2015 were provided as categorical and continuous data. Urine 1-OHP results were missing for five employees.

1-OHP Categorical data: Most of the employees had urine 1-OHP results in category 2(n= 57; 56.44%), with the lowest number of results in category 5(n= 6; 5.94%). Seventy-two

point twenty-eight percent (72.28%) of employees had results below the no-genotoxic effect benchmark guideline of 1.4 µmol/mol crea.(category 1- 2), whilst 27.72% had results above the no-genotoxic effect benchmark guideline of 1.4µmol/mol crea.(category 3-5). Five-point-nine-four percent (5.94%) had urine 1-OHP results above 4.1µmol/mol crea. (category 5) [BMGV of 4.0 µmol/mol crea. has been set by the HSE].

1-OHP Continuous data: the median was the same as the previous two years but the inter quartile range increased.

OBJECTIVE 2:

3.4 RESULTS OF AIR MONITORING FOR PAH (CTPV)

3.4.1 Description of Air CTPV/ PAH results (in mg/m^3) for 2012-2015

The results of personal air sampling for 2012- 2015 are presented in Table 3.5 and 3.6.

Table 3.5: Description of overall Air CTPV/ PAH results (in mg/m^3) for 2012-2015

Year (total number)	**2012** (11)	**2013** (12)	**2014** (10)	**2015** (6)
Air CTPV/PAH (in mg/m^3)				
Median	0.08	0.00095	0.0105	0.0495
Range	0.01- 0.13	0- 0.006	0.007- 0.051	0.015- 0.244
IQR	0.05; 0.11	0.00025; 0.003	0.009; 0.021	0.017; 0.143

.

All the results for air PAH (CTPV) were not normally distributed, thus a median (interquartile range; IQR) and non-parametric tests were considered.

Table 3.6: Description of Air CTPV /PAH results per job description and department (2012-2015)

Year (number)	**2012** (11)		**2013** (12)		**2014** (10)		**2015** (6)	
Air CTPV/PAH (in mg/m^3)	**Median**	**Range**	**Median**	**Range (IQR)***	**Median**	**Range (IQR)***	**Median**	**Range (IQR)***
Job description								
Fitter	0.09	0.09						
Operator	0.105	0.08 /0.013						
Section controller	0.03	0.03						
Furnace operator	0.01	0.01			0.008	0.008		
Casing welder	0.7	0.7						
Controller	0.11	0.11						
Tapper	0.09	0.05`/0.13 (0.06;0.12)			0.0225	0.01/0.051 (0.013;0.04)	0.058	0.015/0.244 (0.041; 0.143)
Crane operator			0.0004	0/ 0.0006 (0.0002;0.001)				
Raw attendant			0.003	0.0009/0.003				
Granulation operator					0.009	0.009		
Raw operator					0.007	0.007		
Slag runner					0.011	0.009/0.021		
Co-ordinator							0.017	0.017
Department								
Furnace A							0.041	0.017/0.143
Furnace C							0.058	0.015/0.244
Furnace C tap	0.07	0.07			0.013	0.01/0.016		
Furnace D			0.006	0.006				
Furnace D tap	0.13	0.13			0.016	0.11/0.021		
Furnace E			0.0025	0.001/0.004				
Furnace E tap	0.11	0.11			0.04	0.029/0.051		
Furnace F	0.05	0.01/0.07	0.0007	0.0002/0.003 (0.0003;0.002)				
Furnace F tap							0.009	0.009
Furnace F control							0.008	0.008
Raw	0.08	0.03/0.013						
Raw/control			0.0009	0.0009				
Final product	0.1	0.09/0.11						
3IC			0.00025	0/0.003 (0.0001;0.00165)	0.008	0.007/0.009		

* Range and IQR are both given if the Range and IQR are different

Overall: The air monitoring results showed marked variation over the years with the lowest levels of CTPV as BSM (in mg/m^3) recorded in 2013 [median (range) 0.00095 (0-0.006)], and the highest levels in 2015 [median (range) 0.0495 (0.015-0.244)]. There was an overall increase in the CTPV levels from 2013 to 2015. However, an analysis was not done to check if this change was statistically significant. All the air measurements were below the OEL, except for two employees in 2015 (both tappers, in furnace A and furnace C).

There were 11 employees from whom personal air measurements were done in 2012. These belong to seven different job descriptions. These are: casing welder, controller, fitter, furnace operator, operator, section controller, and tapper. Most of the measurements were done on tappers (36.36%), followed by operators (18.18%).The measurements were done in six different work areas/ departments: furnace C , furnace D , furnace E , furnace F, final product, and raw. Most of the measurements were done in furnace F (27.27%) and raw departments (27.27%).

The 8hr TWA mg/m^3 ranged from 0.01 to 0.13 mg/m^3, with a median of 0.08 mg/m^3 (IQR 0.05; 0.11). All the air measurements were below the OEL of 0.14mg/m^3. The two measurements close to the OEL at 0.131 mg/m^3 were from a tapper in furnace D department and an operator in crp/all department.

In 2013, 12 employees wore personal samplers. These belonged to two different job descriptions (crane operator and raw attendant). Most of those measurements are done on crane operators (75%). The measurements were done in five different work areas/ departments. Most of the measurements were done in furnace F and furnace 3IC (33%).

The 8hr TWA mg/m^3 ranged from BDL (below detectable limit) to 0.006 with a median of 0.00095 mg/m^3 (IQR 0.00025; 0.003). All the air measurements were below the OEL of 0.14mg/m^3. No measurement was close to the OEL.

A total of 10 personal air measurements were done in 2014. These belonged to five different job descriptions. The job descriptions were: furnace operator, granulation operator, raw operator, slag runner, and tapper. Most of those measurements are done on tappers (40%) followed by slag runners (30%).

The measurements were done in four departments: tapping, furnace F, furnace 3IC granulation, and furnace 3IC production. Most of the measurements were done in the tapping department (70%).

The 8hr TWA mg/m^3 ranged from 0.007 to 0.051 with a median of 0.0105 mg/m^3 (IQR 0.009; 0.021). All the air measurements were below the OEL of 0.14mg/m^3. The IQR increased in 2014 compared to 2013 although the median remained similar.

Only six air measurements were done in 2015. These belonged to two different job descriptions (co-ordinator and tapper). Most of those measurements are done on tappers (83.33%).The measurements were done in two different work areas/ departments (furnace A and furnace C).

The 8hr TWA mg/m^3 ranged from 0.015 to 0.244 with a median of 0.0495 mg/m^3 (IQR 0.017; 0.143). Two measurements were above the OEL of 0.14mg/m^3. These were in furnace A and furnace C department, and both were tappers (job titles).

3.4.2 Bivariate analysis (air CTPV and: job description; department)

All the results for air PAH (CTPV) were not normally distributed, thus a Kruskal Wallis test (or Mann Whitney test for 2015) were considered to determine the relationship between air CTPV: and department; and job description.

The results of the Kruskal Wallis test (or Mann Whitney test for 2015) showing the relationship between Air CTPV: and department; and job description for 2012- 2015 are

depicted in Table 3.7. The table shows the number of employees per department (N), the rank sum of the Kruskal Wallis test (or Mann Whitney test for 2015), and corresponding p-value.

The hygiene air measurements were conducted in different departments each year from 2012-2015. The Kruskal-Wallis test (or Mann Whitney test for 2015) showed that the groups had similar exposures to CTPV.

Table 3.7: Bivariate analysis showing the relationship between Air CTPV and: Department and job description for 2012-2015.

2012[#]									
	Department	**N**	**Rank Sum**	**P value**		**Job description**	**N**	**Rank Sum**	**P value**
Air CTPV	Furnace C	1	4.5	0.31	**Air CTPV**	Casing welder	1	4.5	0.46
	Furnace D	1	10.5			Controller	1	8.5	
	Furnace E	1	8.5			Fitter	1	7	
	Furnace F	3	8.5			Furnace operator	1	1	
	Final product	2	15.5			Tapper	4	26.5	
	Raw	3	18.5			Section controller	1	2	
						Operator	2	16.5	
2013[#]									
Air CTPV	Furnace D	1	12	0.28	**Air CTPV**	Crane operator	9	53	0.31
	Furnace E	2	18.5			Raw attendant	3	25	
	Furnace F	4	24.5						
	3IC	4	17						
	Raw/ control	1	6						
2014[#]									
Air CTPV	Furnace C	2	12	0.09	**Air CTPV**	Furnace operator	1	2	0.18
	Furnace D	2	14			Granulation operator	1	3.5	
	Furnace E	2	19			Raw operator	1	1	
	Furnace F	2	5.5			Slag runner	3	17.5	
	3IC	2	4.5			Tapper	4	31	
2015[*]									
Air CTPV	Furnace A	3	10	0.83	**Air CTPV**	Co-ordinator	1	2	0.38
	Furnace C	3	11			Tapper	5	19	

[#]Kruskal Wallis test; [*]Mann Whitney test

There was no statistically significant difference in air measurements results amongst workers in the different departments and job descriptions for each year (2012-2015).

Bivariate analysis of air CTPV and: job description; department (2012)

The Kruskal Wallis test to determine the relationship between air measurements: and job description showed that the groups are similar ($\chi 2$ (6) = 5.65, p =0.46); and department showed that the groups are similar ($\chi 2$ (5) = 5.91, p =0.31).

Bivariate analysis of air CTPV and: job description; department (2013)

The Kruskal Wallis test showed that the air measurements are similar amongst workers in the different job description groups ($\chi 2$ (1) = 1.03, p =0.31); and departments ($\chi 2$ (4) = 5.11, p =0.28).

Bivariate analysis air CTPV and: job description; department (2014)

The Kruskal Wallis test showed that the air measurements are similar amongst workers in the different job description groups ($\chi 2$ (4) = 6.23, p =0.18); and departments ($\chi 2$ (4) = 7.99, p =0.09).

Bivariate analysis air CTPV and: job description; department (2015)

The Mann Whitney test showed that the air measurements are similar amongst workers in the different job description groups (p =0.38); and departments (p =0.83).

OBJECTIVE 3:

3.5 RELATIONSHIP BETWEEN URINE 1-OHP AND: WORK AREA AND PERSONAL CHARACTERISTICS

3.5.1 Bivariate analysis showing the unadjusted relationship between 1-OHP (categorical) and: work department- section from the appended data (2012- 2015)

Table 3.8 presents the results of the bivariate analysis showing the unadjusted relationship between 1-OHP and work Department-section.

Table 3.8: Bivariate analysis showing the unadjusted relationship between 1-OHP and: work department-section from combined data (2012- 2015).

Year	2012		2013		2014		2015	
Characteristic	1-OHP category		1-OHP category		1-OHP category		1-OHP category	
	1-2	3-5	1-2	3-5	1-2	3-5	1-2	3-5
Department	N=67	N=15	N=66	N=27	N=55	N=18	N=56	N=28
	n (%)	n (%)	n (%)	n (%)	n (%)	n (%)	n (%)	n (%)
PM Production	33 (49.25)	7 (46.67)	23 (34.85)	18 (66.67)	21 (38.18)	15 (83.33)	17 (30.36)	19 (67.86)
PM Maintenance	13 (19.40)	2 (13.33)	17 (25.76)	5 (18.52)	11 (20.00)	2 (11.11)	14 (25)	5 (17.86)
PM SHEQ	1 (1.49)	2 (13.33)	2 (3.03)	1 (3.70)	1 (1.82)	1 (5.56)	2 (3.57)	0
PM Admin	2 (2.99)	0	4 (6.06)	0	3 (5.45)	0	1 (1.79)	0
Furnace C	0	1 (6.67)			-	-	0	1 (3.57)
Furnace D/E	1 (1.49)	3 (20.00)	1 (1.52)	3 (11.11)	2 (3.64)	0	2 (3.57)	1 (3.57)
Furnace F	-	-	2(3.03)	0	1(1.82)	0	2(3.57)	0
SHEQ	17 (25.37)	0	17 (25.76)	0	16 (29.09)	0	18 (32.14)	2 (7.14)
Fisher's exact	0.001##		0.001##		0.010#		0.009##	

#FE<0.05 ##FE<0.01 ### FE<0.001

Overall result (2012-2015) for bivariate analysis: 1-OHP and Department-Section

There was a statistically significant difference in urine 1-OHP categorical results and: work Department-section for all the years [2012 (FE= 0.001); 2013 (FE=0.001); 2014 (FE=0.010); 2015 (FE= 0.009)].

Bivariate analysis: 1-OHP and Department-Section (2012)

The department-section with the largest number of employees with urine 1-OHP results above the benchmark level of 1.4µmol/mol were: PM Production and furnace D/E.

Bivariate analysis: 1-OHP and Department- Section (2013-2015)

The department-section with the largest number of employees with urine 1-OHP results above the benchmark level of 1.4µmol/mol were: PM Production and PM Maintenance.

3.5.2 Bivariate analysis showing the unadjusted relationship between 1-OHP and other covariates (2012- 2014)

Table 3.9 presents the results of the bivariate analysis showing the unadjusted relationship between 1-OHP and each of the following covariates: smoking; number of cigarettes smoked per day; number of years of smoking; heating facility in the home; ventilation at home; cooking facility at home; and type of food preparation that had been used in the past week (2012- 2014).

Table 3.9: Bivariate analysis showing the unadjusted relationship between 1-OHP and other covariates

Year	**2012**		**2013**		**2014**	
Characteristic	**1-OHP category**		**1-OHP category**		**1-OHP category**	
	1-2	3-5	1-2	3-5	1-2	3-5
Smoking	n=11	n=5	n=21	n=10	n=19	n=9
No	9 (81.82)	4(80)	13 (61.9)	6(60)	13 (68.42)	6(66.67)
Yes	2 (18.18)	1(20)	8(38.1)	4(33.33)	6(31.58)	3(33.33)
Fisher's exact	1		1		1	
Cigarettes smoked/day	n=2	n=1	n=8	n=3	n=5	n=3
0-10	-	-	3(37.5)	3(100)	2(40)	0(0)
11-20	2(100)	1(100)	5(62.5)	0(0)	3(60)	3(100)
Fisher's exact	-		0.182		0.464	
Smoking Duration	n=2	n=1	n=6	n=2	n=6	n=3
0-10	1(50)	0(0)	2 (33.33)	0(0)	2 (33.33)	0(0)
11-20	1(50)	1(100)	3(50)	1(50)	2 (33.33)	3(100)
>20	-	-	1 (16.67)	1(50)	2 (33.33)	0(0)
Fisher's exact	1		1		0.286	
Type of heating	n=7	n=5	n=13	n=8	n=16	n=4
Open/ Coal fire	1 (14.29)	0(0)	1(7.69)	0(0)	0(0)	1(25)
Gas/ Electric	6 (85.71)	5(100)	12 (92.31)	7(87.5)	15 (93.75)	3(75)
All types	-	-	0(0)	1(12.5)	1(6.25)	0(0)
Fisher's exact	1		0.629		0.368	
Ventilation in sleeping area	n=8	n=2	n=12	n=7	n=15	n=8
Yes	6(75)	2(100)	9(75)	5(71.43)	13 (86.67)	7(87.5)
No	2(25)	0(0)	3(25)	2(28.57)	2 (13.33)	1(12.5)
Fisher's exact	1		1		1	

Table 3.9 (continued)						
Cooking Facility	n=10	n=5	n=18	n=9	n=18	n=7
Coal stove	1(10)	1(20)	0(0)	1(11.1)	0(0)	1(14.29)
Gas/ Electric Stove	9(90)	4(80)	17 (94.44)	7(77.78)	18(100)	6(85.71)
Both	-	-	1(5.56)	1(11.11)	-	-
Fisher's exact	1		0.250		0.28	
Food preparation method (in 2 categories)	n=11	n=5	n=19	n=8	n=19	n=8
Cooked and/ Boiled	8 (72.73)	5(100)	12 (63.16)	6(75)	12 (63.16)	5(62.5)
Grilled/ grilled and other	3 (27.27)	0(0)	7 (36.84)	2(25)	7 (36.84)	3(37.5)
Fisher's exact	0.509		0.676		1	

[#]FE<0.05 [##]FE<0.01 [###] FE<0.001

Overall results (2012-2014) for bivariate analysis between 1-OHP and other covariates

There was no statistically significant difference between urine 1-OHP categorical results and each covariate from the questionnaire. Most of the employees, regardless of their personal characteristics, had urine 1-OHP results below benchmark result of 1.4µmol/mol. The exceptions were the urine results for employees who used a coal stove for cooking. Of the two employees who used a coal stove for cooking in 2012: one had urine results above; and the other below the benchmark result of 1.4µmol/mol. In 2013 and 2014, the only employee who used a coal stove for cooking had urine results above benchmark result of 1.4µmol/mol.

Bivariate analysis: 1-OHP and other covariates (2012)

There was no statistically significant difference between urine 1-OHP categorical results and each covariate from the questionnaire [smoking (Fisher's exact= 1); smoking duration (Fisher's exact= 1); type of heating at home (Fisher's exact= 1); ventilation in sleeping area (Fisher's exact= 0.622); cooking facility at home (Fisher's exact= 1); and type of food preparation method (Fisher's exact= 0.51)].

Bivariate analysis: 1-OHP and other covariates (2013)

There was no statistically significant difference between urine 1-OHP categorical results and each covariate from the questionnaire [smoking (Fisher's exact= 1); cigarettes smoked/day (Fisher's exact= 0.182); smoking duration (Fisher's exact= 1); type of heating at home (Fisher's exact= 0.629); ventilation in sleeping area (Fisher's exact= 1); cooking facility at home (Fisher's exact= 0.250); and type of food preparation method (Fisher's exact= 0.676)].

Bivariate analysis: 1-OHP and other covariates (2014)

There was no statistically significant difference between urine 1-OHP categorical results and each covariate from the questionnaire [smoking (Fisher's exact= 1); cigarettes smoked/day (Fisher's exact= 0.464); smoking duration (Fisher's exact= 0.286); type of heating at home (Fisher's exact= 0.368); ventilation in sleeping area (Fisher's exact= 1); cooking facility at home (Fisher's exact= 0.28); and type of food preparation method (Fisher's exact= 1)].

OBJECTIVE 4:

3.6 TRENDS IN URINE 1-OHP RESULTS OVER TIME (2012-2015).

3.6.1 Trends in urine 1-OHP (continuous) results over time (unadjusted)

Table 3.10 presents the results of the multilevel mixed-effects Tobit regression model showing the trends in urine 1-OHP results, over time (for 2012- 2015; unadjusted).

Table 3.10: Trends in urine 1-OHP (continuous) results over time (unadjusted)

N= 332				
1-OHP log results	**Coefficient**	**Standard error**	**P-value**	**95% Confidence Interval**
Year	0.192	0.058	0.001##	(0.080; 0. 305)

#p<0.05, ##p<0.01 ###p<0.001

There was an increase in the results for urine 1-OHP every year from 2012-2015, which was statistically significant (p=0.001). Compared to 2012, the 1-OHP results showed a mean increase of 0.19 points.

3.6.2 Trends in urine 1-OHP (continuous) results over time adjusted for work Department (2012-2015).

Table 3.11 presents the results of the multilevel mixed-effects Tobit regression model showing the trends in urine 1-OHP results (as continuous variable) over time, adjusted for work Department –Section (2012- 2015).

Table 3.11: Trends in urine 1-OHPresults over time adjusted for work Department-Section (2012-2015).

N= 332				
1-OHP log results	**Coefficient**	**Standard error**	**P-value**	**95% Confidence Interval**
Year	0.196	0.058	0.001###	(0.083; 0.309)
Department-Section				
Lab/SHEQ *(reference)*				
PM Production	0.811	0.227	0.000###	(0.367; 1.255)
Furnace D/E	2.081	0.458	0.000###	(1.184; 2.979)
Furnace F	-0. 274	0.702	0.696	(-1.651; 1.103)
Furnace C	3.3	0.963	0.001##	(1.413; 5.187)
PM maintenance	0. 398	0. 260	0.127	(-0.113; 0.908)
PM SHEQ/Lab	0. 862	0.521	0.098	(-0.159; 1.884)
PM Admin	0.127	0.489	0.796	(-0.832; 1.085)

#p<0.05, ##p<0.01 ###p<0.001

After adjusting for department-section, there was still an increase in the results for urine 1-OHP every year from 2012-2015, which was statistically significant (p-value= 0.001). Compared to 2012, the 1-OHP results showed a mean increase of 0.2 points.

Lab/Sheq was used as a reference as it consists of the group with the lowest CTPV exposure. Compared to SHEQ, the 1-OHP results for all the department-sections, except furnace F, were higher. However, the difference was only statistically significant for PM Production, furnace D/E, and furnace C. Compared to SHEQ, the 1-OHP results for the following groups were higher: PM Production was 0.81 points higher (p= 0.000); furnace D/E was 2.08 points higher (p=0.000); furnace C was 3.3 points higher (p=0.001).

CHAPTER 4: DISCUSSION

In this chapter we will discuss the main findings of this study based on the objectives. We would also like to compare our findings with what is in the published literature. This will be followed by the conclusion and recommendations.

The main aim of this study was to determine the total exposure to PAH; the relationship between urine 1-OHP and: work area and personal characteristics; and to analyse trends in urine 1-OHP levels over a period of four years (2012-2015).

The study participants were exposed to PAHs during chrome smelting and electrode paste-making, which requires biologic and environmental monitoring according to the South African Regulations for Hazardous Chemical Substances from the Occupational Health and Safety Regulations (Act 85 of 1993). The South African recommended Occupational Exposure Limit- Recommended Limit (OEL-RL) for PAHs in the work environment [as Coal Tar Pitch Volatiles (CTPV)] is 0.14 mg/m^3 (Occupational Health and Safety Act and Regulations, Act 85 of 1993).

There is currently no biological exposure limit that has been set for 1-OHP, but a Biological Monitoring Guidance Value (BMGV) of 4.0 µmol/mol creatinine has been set by the British Health & Safety Executive (HSE). This value is derived from the 90th percentile of values from a study of various British companies that followed good occupational hygiene measures (Jongeneelen, 2014). The companies that were studied included: coke ovens, tar distillation, aluminium, bitumen refinery, road construction, motor tyre, foundry, and fish smokehouse. If this BMGV is exceeded, it indicates a need for further investigation into the work practices and occupational hygiene measures.

Jongeneelen (2001) suggested benchmark guidelines for urine 1-OHP based on the studies in non-occupational and occupationally exposed individuals published in the literature. The occupational exposure was studied in the following industries: coke ovens, rolling mills, primary aluminium plant, and graphite anode production plants. The countries that were represented were: China, Taiwan, Netherlands, Germany, Poland, and Surinam. He suggested a value of 1.4 µmol/ mol creatinine as the "no-observed-effect-level of genotoxic effect" from studies done in occupationally exposed workers from coke ovens, rolling mills, and a graphite anode production plant. The "no-observed-effect-level of genotoxic effect" was determined by measurement of genotoxic effects (DNA single strand breakage, DNA adducts, and sister chromatid exchanges) in lymphocytes. It is believed that the carcinogenic effects of PAHs are via a genotoxic mechanism. Thus, for the purposes of prevention, it seems reasonable to maintain the exposure at a level which prevents further genotoxic effects. One-hydroxypyrine (1-OHP) levels of 2.3 and 4.9 µmol/mol creatinine were suggested as the benchmark guidelines in aluminium and coke oven workers, respectively. These values were the urine levels that corresponded to the OEL (air levels), when urine and air levels were correlated (Jongeneelen, 2001).

4.1 DESCRIPTION OF THE EMPLOYEE WORK AREA

A total of 397 employees who were exposed to PAHs were evaluated for the years 2012-2015. The number of employees that were evaluated for each year differed, with the highest number in 2012 (111), and the lowest number was in 2014 (83). We were not able to obtain the information on the total number of employees at the plant in each year, and how the number that we were given was chosen. If the number that we were given to analyse is the total number of employees at the time: this yearly variation in the number of employees evaluated each year may be due to the movement of employees into and out of the workplace; or due to information for some of the employees not being available for some of the years.

Also, the analysis plan may have changed over time, for instance, in 2013, results for eight employees from the admin section were available for analysis whereas two or less were available for the other years.

The proportion of employees in various work areas was evaluated, and it remained similar throughout the years. Most of the employees that were evaluated worked: in the Paste Making (PM) and Lab/SHEQ departments (2012: 60.36% and 15.31%; 2013: 69.61% and 18.63%; 2014: 74.7% and 19.28%; 2015: 67.33% and 21.78%). Most of the employees worked in the production and maintenance sections (2012: 48.65% and 29.73%; 2013: 55.88% and 25.49%; 2014: 48.19% and 26.51; 2015: 53.47% and 22.77%). The job description of production operators was most common (2012: 38.74%; 2013: 45.10%; 2014: 38.55%; 2015: 33.66%).

The majority of workers tested worked in PM production, PM maintenance and SHEQ department-sections (In 2012: 48.78%; 18.29% and 20.73%. In 2013: 44.09%; 23.66% and 18.28%. In 2014: 49.32%; 17.81% and 21.92%. In 2015: 42.86%; 22.62% and 23.81%).

OBJECTIVE 1

4.2 OVERALL URINE BIOMARKER 1-OHP RESULTS

The 1-hydroxypyrene (1-OHP) results, available for 387 employees, were evaluated for the years 2012-2015. Fifteen to twenty-eight percent (15-28%) of employees had urine 1-OHP results above the "no-observed-effect-level of genotoxic effect" benchmark guideline of 1.4µmol/mol creatinine (crea.). Of those, one to six-percent (1- 6%) had urine 1-OHP results above 4.1µmol/mol creatinine. [A Biological Monitoring Guidance Value (BMGV) of 4.0 µmol/mol creatinine has been set by the British Health & Safety Executive (HSE)]. The median 1-OHP for 2013-2015 was 1µmol/mol creatinine, with interquartile ranges (IQR) as

follows [2013 (0.5; 1.4); 2014 (0.6; 1.4); 2015 (0.9; 1.5)]. These levels are much lower than those obtained in a study in a chrome smelter by Moto and Claassen (2017), which is a similar industry to our current review. Moto and Claassen (2017) reported the following results, for 1-OHP [mean (SD) in μmol/mol crea.]: 6.21 (3.1); and 2.2 (2.3), for casing welders and tappers respectively. However, compared to the study by Moto and Claassen, our study included a wider variety of employees from low, medium and high exposure groups, which could account for the overall lower median in our study. The 1-OHP results for the employees in our study are also lower than those recorded for other industries with PAH exposures such as: coke oven with median (range) 3.4; (0.2-69.5) μmol/mol crea.; and aluminium works with mean (range) 4.99 (0.0–24.4) μmol/mol crea. (Kloslova et al., 2016; Kuljukka-Rabb T. et al., 2002). However, the results are similar to those recorded in the cathode metallurgy workers, with a median (range) of 0.96μmol/mol crea. (0.12-6.99) (Barbeau et al., 2014). The variation in these results is not surprising as the relative proportion of pyrene to carcinogenic PAHs differs in different work places, and 1-OHP is a metabolite of pyrene (Tuakuila et al., 2013).

OBJECTIVE 2

4.3 RESULTS OF AIR MONITORING

Personal air monitoring for 2012-2015 was done on a total of 39 employees. The measurements were taken from employees from different departments and job descriptions over these years. The air monitoring results show marked variation over the years. The lowest levels of PAH [Coal Tar Pitch Volatiles (CTPV) as Benzene Soluble Matter (BSM)] were recorded in 2013 [median (IQR, range) 0.00095 mg/m^3 (0.00025, 0.003; 0-0.006)], and the highest levels in 2015 [median (IQR, range) 0.0495 mg/m^3 (0.017, 0.143; 0.015-0.244)]. There was also a variation in the group of employees and work areas from which the

measurements were taken over the years, thus we were not able to work out if there were any changes in exposure in the same group over time for most groups. However, the tappers were measured in 2012, 2014 and 2015.

The levels of air CTPV (as BSM) in our study are much lower than those reported in coke ovens with a geometric mean (range) in mg/m^3: topside 0.5 (0.1-5.7); and side oven 0.7(0.1-2.6) (Jongeneelen, 1992). However, this was reported 27 years ago and thus controls are likely to have improved.

Most of the air CTPV results for all the years 2012-2015 are more than 10 times lower than the South African recommended Occupational Exposure Limit- Recommended Limit (OEL-RL) of 0.14mg/m3 (Occupational Health and Safety Act and Regulations, Act 85 of 1993). The personal air results are also lower than those recommended by agencies such as the AGCIH and NIOSH as shown in table 3 of this report (Kim et al, 2013). Only 2 employees (both tappers; measured in 2015) had air CTPV results higher than the South African OEL-RL of 0.14mg/m^3.There was no statistically significant relationship between the air measurements and job description and department.

OBJECTIVE 3

4.4 RELATIONSHIP BETWEEN URINE 1-OHP AND: WORK AREA AND PERSONAL CHARACTERISTICS

The employees showed similar personal characteristics which related to potential non-occupational PAH exposure. Most respondents: were non-smokers; used gas or electric for heating and cooking at home; slept in a ventilated room; and ate food that is cooked/boiled.

In the bivariate analysis, there was no statistically significant relationship between urine 1-OHP and personal characteristics that relate to potential non-occupational exposure to PAHs

[using the covariates from the questionnaire: smoking; number of cigarettes smoked per day; number of years of smoking; heating facility in the home; ventilation at home; cooking facility at home; and type of food preparation that had been used in the past week (2012-2014)]. However, the response rate from the questionnaires was poor. The results are, however, consistent with the results from some studies, but differ from those of others. In a study done in a chrome smelter, there was no statistically significant relationship between urine 1-OHP and smoking (Moto & Claassen, 2017). Some studies done in multiple industries also showed no statistically significant relationship between urine 1-OHP and: smoking; and diet (Fostinelli et al., 2018; Kloslova et al., 2016; Lee et al., 2007; McClean et al., 2004). However, in a study done in highway asphalt pavers, there was a statistically significant relationship between urine 1-OHP and smoking, but there was no statistically significant relationship between urine 1-OHP and diet (McClean et al., 2004). The smokers had higher urine 1-OHP levels compared to non-smokers.

What is notable in studies done to determine the relationship between urine 1-OHP and diet is that the dietary exposure is assessed using questionnaires. Questionnaires may introduce response and recall bias. Recall bias may be introduced in questions regarding, for example, the type of food/ cooking method. Some employees may not accurately recall what type of cooking method was used to prepare their food that week. Response bias may be introduced by some employees answering in line with what they think may put them in a good position rather than what is factual.

In this study those who indicated that they were current smokers were few (19-34% of questionnaire respondents) and most smoked 11-20 cigarettes per day, which may contribute to the lack of association with 1-OHP levels. The cooking methods reported by the majority were unlikely to cause excessive PAH exposure (mainly boiling and cooking; 63-68% of questionnaire respondents), thus the result is as expected.

In the bivariate analysis, there was a variation in the statistical significance of the relationship between urine 1-OHP and: work department; section; and job description in the years 2012-2015. For example: there was a statistically significant difference in 1-OHP results across departments in 2012-2014, but none in 2015. However, there was a statistically significant difference in 1-OHP results across sections and job descriptions in 2014 and 2015, but none in 2012 and 2013. This was probably due to the poorer specificity of the individual variables work department, section, and job description in describing PAH exposure in the workplace. For instance, employees who work in the PM department have different work sections and job descriptions. In the study done in a similar industry by Moto and Claassen (2017), they found that there was a statistically significant relationship between urine 1-OHP and job description, but not with plant section. These discrepancies are consistent with our findings.

In our study the newly created department-section variable is a better indicator of employee's PAH exposure than department, section, or job-description on their own. There was a statistically significant relationship between urine 1-OHP and department-section for all the years. Other studies which found a statistically significant relationship between urine 1-OHP and work area were done in other industries such as coke ovens (Chen et al., 2003; Wu et al., 2003; Zhang et al., 2001), metallurgy workers (Barbeau et al., 2014), and Chinese restaurants (Pan et al., 2008).

The department-sections that have urine 1-OHP levels that are significantly higher than SHEQ (lowest exposed) are: furnace C; furnace D/E; and PM production, in decreasing order respectively. This is not surprising since these are the highest exposed groups due to their direct involvement in the processes that result in the production of PAHs (PAHs are produced mainly: during the process of paste making; and (electrode welding and tapping) during chrome smelting). The department-section with the highest urine 1-OHP was furnace C. However, it is not clear why this is the case. The job descriptions are the same across these

sections and thus were not used in the analysis as there would have been misclassification of exposure.

OBJECTIVE 4

4.5 TRENDS IN 1-OHP RESULTS OVER TIME (2012-2015).

There was a statistically significant increase in the urine 1-OHP results from 2012-2015. The increase was still apparent after adjusting for department-sections. In the literature, the possible causes of increased urine 1-OHP are: exposure in the workplace (via inhalation or absorbed through the skin); or outside the workplace (from diet, smoking, heating, environmental pollution outside the workplace) (Moen et al., 1996; Jongeneelen et al., 2001; Kim et al., 2013).

In our study, there was no statistically significant relationship between urine 1-OHP results and diet/ heating/ smoking.

From this current study, there were few air measurements that were done, and the groups of employees tested per year were not the same. We were not able to determine the correlation between urine and air measurements. From this study, we are thus unable to confidently conclude about the role that air exposure to CTPV contributed to the increased urine 1-OHP. However, in 2015, there were 2 employees with air CTPV levels that were higher than OEL. The maximum air CTPV levels also increased from 2012-2015, however we were not able to analyse if this was statistically significant. The increase in air CTPV levels could be related to engineering controls or Personal Protective Equipment (PPE) (Moto & Claasen, 2016). However, another possible source of exposure to PAHs is through the skin, which was not explored in this study (Kim et al., 2013). In studies done in workplaces such as coke ovens a good correlation between the air and urine measurements has been shown, which suggests

that the main route of exposure to PAHs in that workplace is through inhalation (Jongeneelen, 2001). In workplaces where the main route is through the skin, one often finds a poor correlation between the air and urine measurements (Jongeneelen, 2001).

In the univariable analysis, we noted that the number of casing welders (one of the highest exposed group) that were tested for urine1-OHP measured increased from 2013-2015 (n=2, 3, and 9 respectively); but the number of admin/other personnel (lower exposed group) that were tested for urine 1-OHP were fewer from 2013-2015 (n= 6, 5, and 2 respectively). The numbers for both groups, however, was very small. We also did an analysis adjusting for department section, which still showed an increase in 1-OHP results over time. This suggests that the increase in 1-OHP over the four years is apparent even if the distribution of employees is taken into account.

A variation in the season in which urine 1-OHP results are measured, and variation in the group of people tested can account for changes in 1-OHP over time, which cannot be excluded as a possibility in our study. In a study done in children from New York City, the researchers found an increase in the levels of pyrene over time, which was more apparent with heating season (Jung et al., 2014). However, the study was not conducted amongst the same group of children. Han et al. also (2008) reported seasonal variation in 1-OHP in a study done in coke oven workers and controls.

4.6 LIMITATIONS

This was a retrospective record review; therefore, some of the records could not be used as some of the data was missing. The results of the air monitoring could not be matched with the urine 1-OHP results as not all employees/ employee groups were monitored with air pumps, thus a linear regression could not be run to determine the correlation between the two measurement types. The response rate from the questionnaires was poor, thus limiting the

analysis that could be done using this data. Due to the small numbers, we were not able to run a multivariable analysis with 1-OHP as the dependent variable and: all the covariates from the questionnaire; work areas; and air PAH (CTPV) as the independent variables. The results of the bivariate analysis between 1-OHP and the covariates from the questionnaire could have been influenced by the small numbers obtained. In our study we did not look at the month/season in which the urine 1-OHP measurements were taken, which could also affect the comparability.

CHAPTER 5: CONCLUSION and RECOMMENDATIONS

5.1 CONCLUSION

The findings of this research indicate that the PAHs (as CTPV) in personal air within this work environment were controlled at levels below those recommended by the South African regulatory guidelines of 0.14mg/m^3, except for two workers (both tappers) in 2015.

During the years studied (2012 to 2015), 15 to 28% of employees had urine 1-OHP results above the "no-observed-effect-level of genotoxic effect" benchmark guideline of 1.4µmol/mol creatinine. Very few workers (one to six percent) had urine 1-OHP results above 4.1µmol/mol creatinine [A Biological Monitoring Guidance Value (BMGV) of 4.0 µmol/mol creatinine has been set by the British Health & Safety Executive (HSE)].

The results of urine 1-OHP vary over time and with a combination of work department and section. The department-sections that have urine 1-OHP results that are statistically significantly higher than Lab/SHEQ are: furnace C; furnace D/E; and PM production, in decreasing order respectively.

Urine 1-OHP levels, however, are not influenced by personal exposures outside the workplace such as: smoking, diet, heating, cooking facilities and ventilation at home.

The regular monitoring of PAHs is necessary in a chrome smelting plant.

5.2 RECOMMENDATIONS

1. The job descriptions, sections and departments to be recorded in a similar manner every year for both the urine 1-OHP and air CTPV to assist in data management.
2. The urine 1-OHP levels to be recorded as actual continuous measurements, and not in categories.

3. The correlation between air measurements and 1-OHP results to be calculated to assist in determining whether the major exposure to PAHs is from inhalation or other routes such as the skin. A representative air measurement for the groups from whom urine measurements are done, collected in the same time period when urine measurements are done in that group, will assist in running a correlation analysis.
4. Questionnaires that give information about PAH exposure outside the workplace to be conducted by an experienced interviewer, and perhaps find ways to encourage better questionnaire response rate.
5. It is important for the employers and employees to look at ways of reinforcing all measures to reduce CTPV exposures, such as engineering controls and PPE, especially in high risk employees.

REFERENCES

Abdel-Shafy, H.I. and Mansour, M.S.M. *(2015)* A review on polycyclic aromatic hydrocarbons: Source, environmental impact, effect on human health and remediation. *Egyptian Journal of Petroleum*, 25(1), 107-123.

American Conference of Governmental Industrial Hygienists (ACGIH) (2005). *Polycyclic Aromatic Hydrocarbons (PAHs) biologic exposure indices (BEI)*. Cincinatti, OH: American Conference of Governmental Industrial Hygienists (ACGIH), 2005.

American Conference of Governmental Industrial Hygienists (ACGIH) (2001). *Documentation of the Threshold Limit Values of the TLVs and BEIs, Coal Tar Pitch Volatiles*. [Online] Available from: http://www.acgih.org/forms/store/PoductFormPublic/listAll

Andersen, M.H.G., Saber, A.T., Clausen, P.A., et al. (2018) Association between polycyclic aromatic hydrocarbon exposure and peripheral blood mononuclear cell DNA damage in human volunteers during fire extinction exercises. *Mutagenesis*, 33(1), 105–115.

Angerer, J., Mannschreck, C., and Gundel, J. (1997) Biological monitoring and biochemical effect monitoring of exposure to polycyclic aromatic hydrocarbons. *International Archives of Occupational and Environmental Health*, 70(6), 365–377.

Aquilina, N.J., Delgato-Saborit, J.M., Meddings, C., and Baker, S., et al. (2010) Environmental and biological monitoring of exposures to PAHs and ETS in the general population. *Environment International*, 36(7), 763-771.

Bach, P.B., Kelly, M.J., Tate, R.C., et al. (2003) Screening for lung cancer: a review of the current literature. *Chest*, 123, 72-82.

Bandowe, B.A.M., Meusel, H., Huang, R., et al. (2014) $PM_{2.5}$-bound oxygenated PAHs, nitro-PAHs and parent-PAHs from the atmosphere of a Chinese megacity: Seasonal variation, sources and cancer risk assessment. *Science of the total environment*, 77-87, 473-474.

Barbeau, D., Persoons, R., Marques, M., et al. (2014) Relevance of urinary 3-hydroxybenzo (a) pyrene and 1-hydroxypyrene to assess exposure to carcinogenic polycyclic aromatic hydrocarbon mixtures in metallurgy workers. *The Annals of Occupational Hygiene*, 58(5), 579-590.

Bedinger, G.M., Corathers, L.A., Kuck, P.H., et al. (2012) *Ferroalloys* (advance release). [Online] US geological survey minerals yearbook. Available from: https://minerals.usgs.gov/minerals/pubs/commodity/ferroalloys/index.html[Accessed 04/05/ 2015].

Benford, D., DiNovi, M., Setzer, R.W., et al. (2010) Application of the margin-of-exposure (MoE) approach to substances in food that are genotoxic and carcinogenic e.g.: Benzo[a]pyrene and polycyclic aromatic hydrocarbons. *Food and Chemical Toxicology*, 48(Suppl 1), s42-s48.

Bentsen, R.K., Halgard, U.K., Notø, H., et al. (1998) Correlation between urinary 1-hydroxypyrene and ambient air pyrene measured with an inhalable aerosol sampler and a total dust sampler in an electrode paste plant. *The Science of the Total Environment*, 212, 59-67.

Beukes, J.P., Roos, H., Shoko, L., et al. (2013) The use of thermomechanical analysis to characterise Söderberg electrode raw materials. *Minerals Engineering*, 46-47, 167- 176.

Beukes, J.P., van Zyl, P.G., and Ras, M. (2012) Treatment of Cr (VI)-containing wastes in the South African ferrochrome industry - a review of currently applied methods. *The Journal of The Southern African Institute of Mining and Metallurgy*, 112, 347-352.

Bhonde, P.J., Ghodgaonkar, A.M., and Angal, R.D. (2007) Various techniques to produce low carbon ferrochrome, In: *11th International Ferroalloys Congress (INFACON XI)*, New Delhi, India, 2016*, pp. 85-90.*

Birgul, A., and Tasdemir, Y. (2015) Concentrations, Gas-Particle Partitioning, and Seasonal Variations of Polycyclic Aromatic Hydrocarbons at Four Sites in Turkey. *Archives of Environmental Contamination and Toxicol*ogy, 68(1), 46–63.

Bisceglia, L., de Nichilo, G., Elia, G., et al. (2005) Assessment of occupational exposure to PAH in coke-oven workers of Taranto steel plant through biological monitoring. *Epidemiologia & Prevenzione*, 29(5-6) Suppl, 37-41.

Boffetta, P., Jourenkova, N., Gustavsson, P. (1997) Cancer risk from occupational and environmental exposure to polycyclic aromatic hydrocarbons. *Cancer Causes and Control*, 8(3), 444-72.

Boogaard, P.J., and van Sittert, N.J. (1995) Urinary 1-hydroxypyrene as a biomarker of exposure to polycyclic aromatic hydrocarbons in workers in petrochemical industries: baseline values and dermal uptake. *The Science of the Total Environment*, 163, 203-209.

Brandt, H.C.K., and Watson, W.P. (2003) Review: Monitoring Human occupational and environmental exposures to polycyclic aromatic compounds. *Annals of Occupational Hygiene*, 47(5), 349-378.

Brown, A.S., Brown, R.J.C., Coleman, P.J., et al. (2013) Twenty years of measurement of polycyclic aromatic hydrocarbons (PAHs) in UK ambient air by nationwide air quality networks. *Environmental Science: Processes and Impacts*, 15(6), 1199-1125.

Brown, J.R., and Thornton, J.L. (1957) Percivall Pott (1714-1788) and chimney sweeper's cancer of the scrotum. *British Journal Industrial Medicine*, 14(1), 68-70.

Buckley, T.J., and Lioy, P.J. (1992) An examination of the time course from human dietary exposure to polycyclic aromatic hydrocarbons to urinary elimination of 1-hydroxypyrene. *British Journal Industrial Medicine*, 49(2), 113–124.

Chen, Y-C., Chiang, H-C., Hsu, C-Y., et al. (2016) Ambient PM_{25}-bound polycyclic aromatic hydrocarbons (PAHs) in Changhua County, central Taiwan: Seasonal variation, source apportionment and cancer risk assessment. *Environmental Pollution*, 218, 372-382.

Chen, M.L., Lee, B-C., Lu, P-L., and Mao, I-F. *(*2003) Polycyclic aromatic hydrocarbon-deoxyribonucleic acid (PAH-DNA) adduct levels and exposure to coke oven emissions among workers in Taiwan. *Archives of Environmental Health*, 58(5), 298-305.

Chuang, C-Y., and Chang, C-C. *(2007)* Urinary 1-OHP level relative to vehicle exhaust exposure mediated by metabolic enzyme polymorphisms. *Journal of Occupational Health*, 49, 140-151.

Ciecierska, M., and Obiedzinski, M.W. (2013) Polycyclic aromatic hydrocarbons in the bakery chain. *Food Chemistry*, 141, 1–9.

Cocker, J. (2014) A perspective on biological monitoring guidance values. *Toxicology Letters*, 231, 122-125.

Dell'Omo, M., Muzi, G., Latini, M., et al. (1998) Preventive measures reduce exposure to polycyclic aromatic hydrocarbons at a graphite electrode plant. *Occupational and Environmental Medicine*, 55(6), 401-406.

Ding, Y.S., Ward, J., Hammond, D., and Watson, C.H. (2014) Mouth-Level Intake of Benzo[a]pyrene from Reduced Nicotine Cigarettes. *International Journal of Environmental Research and Public Health*, 11(11), 11898-11914.

Domingo, J.L., Nadal, M. (2015) Human dietary exposure to polycyclic aromatic hydrocarbons: A review of the scientific literature. *Food and Chemical Toxicology*, 86, 144-153.

Elhassaneen, Y.A. (2003). The effects of charcoal-broiled meat consumption on antioxidant defense system of erythrocytes and antioxidant vitamins in plasma. *Nutrition Research*, 24(6), 435–446.

Falcó, G., Domingo, J.L., Llobet, J.M., et al. (2003) Polycyclic Aromatic Hydrocarbons in Foods: Human Exposure through the Diet in Catalonia, Spain. *Journal of Food Protection*, 66(12), 2325-2331.

Feng, B., Liu, Y., Gao, Y., et al. (2018) $PM_{2.5}$-bound polycyclic aromatic hydrocarbons (PAHs) in Beijing: Seasonal variations, sources, and risk assessment. *Journal of Environmental Sciences*, 77, 11-19.

Fostinelli, J., Madeo, E., Toraldo, E., et al. (2018) Environmental and biological monitoring of occupational exposure to polynuclear aromatic hydrocarbons during highway pavement construction in Italy. *Toxicology Letters*, 298, 134-140.

Franco, S.S., Nardocci, A.C., Günther, W.M. (2008) PAH biomarkers for human health risk assessment, a review of the state-of-the-art. *Cadernos de Saúde Pública*; 24(suppl. 4), 569–580.

Gaga, E.O., Ari, A., Döğeroğlu, T., et al. (2012) Atmospheric polycyclic aromatic hydrocarbons in an industrialized city, Kocaeli, Turkey: study of seasonal variations, influence of meteorological parameters and health risk estimation. *Journal of Environmental Monitoring*, 14, 2219.

Gehle, K. (2009). Agency for Toxic Substances and Disease Registry (ATSDR) Case Studies in Environmental Medicine: Toxicity of Polycyclic Aromatic Hydrocarbons (PAHs). Retrieved from http://www.atsdr.cdc.gov/csem/pah/ [accessed 24/02/2020]

Geldenhuys, G., et al. (2015) Monitoring of atmospheric gaseous and particulate polycyclic aromatic hydrocarbons in South African platinum mines utilising portable denuder sampling with analysis by thermal desorption-comprehensive gas chromatography-mass spectrometry. *Journal of Chromatography A*, 1380, 17-28.

Gündel, J., Mannschreck, C., Büttner, K., Ewers, U., Angerer, J. (1996) Urinary levels of 1-hydroxypyrene, 1-, 2+9-, 3- and 4hydroxyphenanthrene in females living in an industrial area of Germany. *Archives of Environmental Contamination and Toxicology*, 31(4), 585-590.

Hamilton, L. C. (2009). *Statistics with Stata: updated for version 10*. Belmont, Calif, Brooks/Cole.

Han, I.K., Duan, X., Zhang, L., et al. (2008) 1-Hydroxypyrene concentrations in first morning voids and 24-h composite urine: intra- and inter-individual comparisons. *Journal of Exposure Science and Environmental Epidemiology*, 18(5, 477-85.

Harris, K.L., Banks, L.D., Mantey, J.A., et al. (2013) Bioaccessibility of polycyclic aromatic hydrocarbons: relevance to toxicity and carcinogenesis. *Expert Opinion on Drug Metabolism and Toxicol*ogy, 9(11), 1465-80.

Heikkilä, P., Luotamo, M., Pyy, L., and Riihimäki, V. (1995) Urinary 1-naphthol and 1-pyrenol as indicators of exposure to coal tar products. *International Archives of Occupational and Environmental Health*, 67(3), 211-217

Huizer, D., Huijbregts, M.A., van Rooij, J.G., Ragas, A.M. (2014) Testing the coherence between occupational exposure limits and their biological limit values with a generalized PBPK-model: The case of 2-propanolol and acetone. *Regulatory Toxicology and Pharmacology*, 69(3), 408-4015.

Jacob, J., and Seidel, A. (2002) Biomonitoring of polycyclic aromatic hydrocarbons in human urine. *Journal of Chromatography B*, 778(1-2), 31–47.

Jeng, H.A., Pan, C.H., Lin, W.Y., et al. (2013a) Biomonitoring of polycyclic aromatic hydrocarbons from coke oven emissions and reproductive toxicity in non-smoking workers. *Journal of Hazardous Materials*, 244-245, 436-43.

Jeng, H.A., Pan, C-H., and Chao, M-R. (2013b) 1-Hydroxypyrene as a biomarker for assessing the effects of exposure to polycyclic aromatic hydrocarbons on semen quality and sperm DNA integrity. *Journal of Environmental Science and Health*, 48(2), 152-158.

Jongeneelen, F.J. (*2014)* A guidance value of 1-hydroxypyrene in urine in view of acceptable occupational exposure to polycyclic aromatic hydrocarbons. *Toxicology Letters*, 231(2), 239-48.

Jongeneelen, F.J. (2001) Benchmark guideline for urinary 1-hydroxypyrene as biomarker of occupational exposure to polycyclic aromatic hydrocarbons. *The Annals of Occupational Hyg*iene, 45(1), 3-13.

Jongeneelen, F.J. (1994) Biological monitoring of environmental exposure to polycyclic aromatic hydrocarbons; 1-hydroxypyrene in urine of people. *Toxicology Letters*, 72(1-3), 205-211.

Jongeneelen, F.J. (1992) Biological exposure limit for occupational exposure to coal tar pitch volatiles at coke ovens. *International Archives of Occupational and Environmental Health*, 63(8), 511-516.

Jongeneelen, F.J., Anzion, R.B.M., Scheepers, P.T.J., et al. (1988) 1-Hydroxypyrene in urine as a biological indicator of exposure to polycyclic aromatic hydrocarbons in several work environments. *The Annals of Occupational Hygiene*, 32(1), 35-43.

Jongeneelen, F.J., Bos, R.P., Anzion, R.B., et al. (1986) Biological monitoring of polycyclic aromatic hydrocarbons. Metabolites in urine. *Scandinavian Journal of Work, Environment and Health*, 12(2), 137-143.

Jung, K.H., Patela, M.M., Moors, K., et al. (2010) Effects of heating season on residential indoor and outdoor polycyclic aromatic hydrocarbons, black carbon, and particulate matter in an urban birth cohort. *Atmospheric Environ*ment, 44(36), 4545–4552.

Kamal, A., Cincinelli, A., Martellini, Malik RN. (2015) A review of PAH exposure from the combustion of biomass fuel and their less surveyed effect on the blood parameters. *Environmental Science and Pollution Research*, 22(6), 4076-4098.

Katz, M. (2011) *Multivariable analysis: A practical guide for clinicians and public health researchers.* 3rd ed. New York: Cambridge University press.

Kazerouni, N., Sinha, R., Hsu, C-H., et al. (2001) Analysis of 200 food items for benzo[a]pyrene and estimation of its intake in an epidemiologic study. *Food and Chemical Toxicology*, 39(5), 423-436.

Kim, K-H., Jahan, S.A., Kabir, E., Brown, R.J.C. (2013) A review of airborne polycyclic aromatic hydrocarbons (PAHs) and their human health effects. *Environment International*, 60, 71-80.

Kloslova, Z., Drímal, M., Balog, K., et al. (2016) The relations between polycyclic aromatic hydrocarbons exposure and 1-ohp levels as a biomarker of the exposure. *Central European Journal of Public Health*, 24 (4), 302–307.

Křůmal, K., Mikuška, P., and Večeřa, Z. (2013) Polycyclic aromatic hydrocarbons and hopanes in PM1 aerosols in urban areas. *Atmospheric Environment*, 67, 27-37.

Kuljukka-Rabb, T., Nylund, L., Vaaranrinta, R., et al. (2002) The effect of relevant genotypes on PAH exposure-related biomarkers. *Journal of Exposure Analysis and Environmental Epidemiology*, 12, 81-91.

Lai, C-H., Jaakkola, J.J.K., Chuang, C-Y., et al. (2013) Exposure to Cooking Oil Fumes and Oxidative Damages: A longitudinal study in Chinese military cooks. *Journal of Exposure Science and Environment* Epidemiology, 23(1), 94–100.

Lavoué J., Gérin, M., Cote, J., and Lapointe R. (2007) Mortality and cancer experience of Quebec aluminium reduction plant workers. Part I: the reduction plants and coal tar pitch volatile (CTPV) exposure assessment. *Journal of Occupational and Environmental Med*icine, 49, 997–1008.

Lee, M-S., Eum, K-D., Zohet, K-D., et al. (2007) 1-Hydroxypyrene as a biomarker of PAH exposure among subjects living in two separate regions from a steel mill. *International Archives of Occupational and Environmental Health,* 80(8), 671–678.

Lewandowska, A.U., Staniszewska, M., Witkowska, A., et al. (2018) Benzo(a)pyrene parallel measurements in PM1 and PM2.5 in the coastal zone of the Gulf of Gdansk (Baltic Sea) in the heating and non-heating seasons. *Environmental Science and Pollution Research,* 25, 19458–19469.

Li, Z., Porter, E.N., Sjödin, A., et al. (2009) Characterization of PM2.5-bound polycyclic aromatic hydrocarbons in Atlanta—Seasonal variations at urban, suburban, and rural ambient air monitoring sites. *Atmospheric Environment*, 43, 4187-4193.

Lowry, L.K. (1987) The biologic exposure index: its use in assessing chemical exposures in the workplace. *Toxicology*, 47(1-2), 55-69.

Ma, Y., and Harrad, S. (*2015)* Spatiotemporal analysis and human exposure assessment on polycyclic aromatic hydrocarbons in indoor air, settled house dust, and diet: A review. *Environment International, 84, 7–16.*

Martí-Cid, R., Llobet, J.M., Castell, V., and Domingo, J.L. (2008) Evolution of the dietary exposure to polycyclic aromatic hydrocarbons in Catalonia, Spain. *Food and Chemical Toxicology*, 46(9), 3163-3171.

Martorell, I., Perelló, G., Martí-Cid, R., et al. (2010) Polycyclic aromatic hydrocarbons (PAH) in foods and estimated PAH intake by the population of Catalonia, Spain: Temporal trend. *Environment International*, 36(5), 424-432.

McClean, M.D., Rinehart, R.D., Ngo, L., et al. (2004) Urinary 1-Hydroxypyrene and Polycyclic Aromatic Hydrocarbon Exposure among asphalt paving workers. *The Annals of Occupational Hyg*iene, 48 (6), 565–578.

Gasik, M. (2013) *Handbook of Ferroalloys: Theory and Technology*. [eBook] Oxford, Butterworth–Heinemann. [Accessed 28 September 2018].

Moen, E.B., Nilsson, R., Nordlinder, R., et al. (1996) Assessment of exposure to polycyclic aromatic hydrocarbons in engine rooms by measurement of urinary 1-hydroxypyrene.*Occupational and Environmental Medicine*, 53, 692-696.

Moto, T.P., and Claassen, N. (2016) A retrospective analysis of urinary 1-hydroxypyrene in casing welders and tappers in a chrome smelter. *Occupational Health Southern Africa*, 22 (6), 8-12.

Naiker, O and Riley, T (2006). Xstrata Alloys in Profile. In*: Proceedings of the 2006 Southern African Pyrometallurgy Conference, Johannesburg.* South African Institute of Mining and Metallurgy. pp. 297-306.

National Institute for Occupational Safety and Health (NIOSH). Available at: http://www.cdc.gov/niosh/idlh/65996932.html [Accessed 02 February 2019].

Occupational Health and Safety Act of South Africa: Act 85 of 1993. Republic of South Africa; 1993. Available from: http://www.labour.gov.za/DOL/downloads/legislation/acts/occupational-health-and-safety/ammendments/ [Accessed 20 February 2019].

Olatunji, O.S., Fatoki, O.S., Opeolu, B.O., and Ximba, B.J. (2015) Benzo[a]pyrene and benzo[k]fluoranthene in some processed fish and fish products. *International Journal of Environmental Research and Public Health*, 12(1), 940-951.

Øvrebø, S., Ryberg, D., Haugen, A., Leira, H.L. (1998) Glutathione S-transferase M1 and P1 genotypes and urinary excretion of 1-hydroxypyrene in coke oven workers. *Science of The Total Environment*, 220(1), 25-31.

Ovrebø, S., Haugen, A., Hemminki, K., et al. (1995) Studies of biomarkers in aluminium workers occupationally exposed to polycyclic aromatic hydrocarbons. *Cancer Detection and Prevention*, 19(3), 258–267.

Ovrebø, S., Haugen, A., Farmer, P.B., and Anderson, D. (1995) Evaluation of biomarkers in plasma, blood, and urine samples from coke oven workers: significance of exposure to polycyclic aromatic hydrocarbons. *Occupational and Environmental Medicine*, 52, 750-756.

Pan, C-H., Chan, C-C., Huang, Y-L., Wu, K-Y. (2008) Urinary 1-hydroxypyrene and malondialdehyde in male workers in Chinese restaurants. *Occupational and Environmental Medicine*, 65(11), 732–735.

Pan, G., Hanaoka, T., Yamano, Y., et al. (1998) A study of multiple biomarkers in coke-oven workers- a cross-sectional study in China. *Carcinogenesis*, 19(11), 1963-1968.

Park, H.G., Ha, N.Y., Kim, D.H., et al. (2018) Relationship between residence characteristics and polycyclic aromatic hydrocarbon exposure in housewives: second Korean National Environmental Health Survey (2012-2014). *Annals of Occupational and Environmental Medicine*, 30, 23.

Petry, T., Schmid, P., and Schlatter, C. (1996) Airborne exposure to polycyclic aromatic hydrocarbons (PAHs) and urinary excretion of 1-hydroxypyrene of carbon anode plant workers. *The Annals of Occupational Hygiene, 40(3), 345-357.*

Pesch, B., Spickenheuer, A., Kendzia, B., et al. (2011) Urinary metabolites of polycyclic aromatic hydrocarbons in workers exposed to vapours and aerosols of bitumen. *Archives of Toxicol*ogy, 85(Suppl 1), S29-S39.

Phillips, D.H. (1999) Polycyclic aromatic hydrocarbons in the diet. *Mutation Research*, 443, 139–147.

Quinn, L. (2009) Distribution profiles of selected organic pollutants in soils and sediments of industrial, residential and agricultural areas of South Africa. *Journal of Environmental Monit*oring, 11(9), 1647-57.

Ravindra, K., Sokhi, R., Grieken, R.V. (2008) Atmospheric polycyclic aromatic hydrocarbons: source attribution, emission factors and regulation. *Atmospheric Environment*, 42(13), 2895-2921.

Rihs, H-P., Pesch, B., Kappler, M., et al. (2005) Occupational exposure to polycyclic aromatic hydrocarbons in German industries: Association between exogenous exposure and urinary metabolites and its modulation by enzyme polymorphisms. *Toxicology Letters*, 157, 241–255.

Sellappa, S., Mani, B., Keyan, K.S. (2011) Cytogenetic biomonitoring of road paving workers occupationally exposed to polycyclic aromatic hydrocarbons. *Asian Pacific Journal of Cancer Prev*ention, 12(3), 713-717.

Shoko, L., Beukes, J.P., Strydom, C.A., et al. (2015) Predicting the toluene- and quinoline insoluble contents of coal tar pitches used as binders in Söderberg electrodes. *International Journal of Mineral Processing*, 144, 46-49.

Sibiya, P., Chimuka, L., Curowska, E., and Tutu, H. (2013) Development and application of microwave assisted extraction (MAE) for the extraction of five polycyclic aromatic

hydrocarbons in sediment samples in Johannesburg area, South Africa. *Environmental Monitoring and Assess*ment, 185(7), 5537-50.

Singh, L., Varshney, J.G., and Agarwal, T. (2016) Polycyclic aromatic hydrocarbons' formation and occurrence in processed food. *Food Chemistry*, 199, 768-781.

Šišović, A., Škrbec, A., Vadjić, V., et al. (2002) PAH levels and profiles in the suspended particulate matter in Zagreb through four seasons. *Environmental Monitoring and Assessment*, 74, 217–224.

Sobus, J.R., McClean, M.D., Herrick, R.F., et al. (2009) Comparing urinary biomarkers of airborne and dermal exposure to polycyclic aromatic compounds in asphalt-exposed workers. *The Annals of Occupational Hygiene*, 53(6), 561–571.

Strunk, P., Ortlepp, K., Heinz, H., et al. (2002) Ambient biological monitoring of coke plant workers- determination of exposure to polycyclic aromatic hydrocarbons. *International Archives of Occupational and Environmental Health*, 75(5), 354-358.

Tomaz, S., Shahpoury, P., Jaffrezo, J-L., et al. (2016) One-year study of polycyclic aromatic compounds at an urban site in Grenoble (France): Seasonal variations, gas or particle partitioning and cancer risk estimation. *Science of the Total Environment*, 565, 1071-1083.

Tongo, I., Ogbeide, O., and Ezemonye, L. (2017) Human health risk assessment of polycyclic aromatic hydrocarbons (PAHs) in smoked fish species from markets in Southern Nigeria. *Toxicology Reports*, 4, 55-61.

Tsai, H-T., Wu, M-T., Hauser, R., et al. (2003) Exposure to environmental tobacco smoke and urinary 1-hydroxypyrene levels in preschool children. *Kaohsiung Journal of Medical Sciences*, 19(3), 97-104.

Tuakuila, J., Kabamba, M., and Mata, H. (2013) High human exposure to pyrene (polycyclic aromatic hydrocarbon) in Kinshasha, a capital of the Democratic Republic of Congo. *Archives of Public Health*, 71(1), 14.

UCLA (n.d.) *Tobit analysis: STATA data analysis examples*. [Online] Retrieved from https://stats.idre.ucla.edu/stata/dae/tobit-analysis/ [Accessed 23/03/2019].

Unwin, J., Cocker, J., Scobbie, E., and Chambers, H. (2006) An assessment of occupational exposure to polycyclic aromatic hydrocarbons in the UK. *The Annals of Occupational Hygiene*, 50(4), 395–403.

Väänänen, V., Hämeilä, M., Kontsas, H., et al. *(*2003) Air concentrations and urinary metabolites of polycyclic aromatic hydrocarbons among paving and remixing workers. *Journal of Environmental Monitoring*, 5(5), 739–746.

Vainio, H. (1985) Current trends in the biological monitoring of exposure to carcinogens. *Scandinavian Journal of Work, Environment and Health*, 11(1), 1-6.

Van Rooij, J.G.M., Veeger, M.M.S., Bodelier-Bade, M.M., et al. (1994) Smoking and dietary intake of polycyclic aromatic hydrocarbons as sources of interindividual variability in the baseline excretion of 1-hydroxypyrene in urine. *International Archives of Occupational and Environmental Health*, 66(1), 55-65.

Viau, M.B. (1999) Urinary 1-hydroxypyrene as a biomarker of exposure to polycyclic aromatic hydrocarbons: biological monitoring strategies and methodology for determining biological exposure indices for various work environments. *Biomarkers*, 4 (3), 159-87.

Viau, C., Vyskočil, A., Martel, L. (1995) Background urinary 1-hydroxypyrene levels in non-occupationally exposed individuals in the Province of Qubec, Canada, and comparison with

its excretion in workers exposed to PAH mixtures. *The Science of the Total Environment*, 163, 191-194.

Vu, A.T., Taylor, K.M., Holman, M.R., et al. (2015) Polycyclic Aromatic Hydrocarbons in the Mainstream Smoke of Popular U.S. Cigarettes. *Chemical Research in Toxicol*ogy, 28(8), 1616–1626.

Wang, Y., Wonga, L-Y., Meng, L., et al. (2019) Urinary concentrations of monohydroxylated polycyclic aromatic hydrocarbons in adults from the U.S. Population Assessment of Tobacco and Health (PATH) Study Wave1 (2013–2014). *Environment International*, 123, 201–208.

Wu, M-T., Pan, C-H., Huang. Y-L., et al. (2003) Urinary excretion of 8-hydroxy-2-deoxyguanosine and 1-hydroxypyrene in coke-oven workers. *Environmental and Molecular Mutagenesis*, 42, 98-105.

Wu, M.T., Mao, I., Wypij, D., et al. (1998) Urinary 1-hydroxypyrene concentrations in coke oven workers. *Occupational and Environmental Medicine*, 55(7), 461-467.

Yershova, K., Yuan, J-M., Wang, R., et al. (2016) Tobacco-specific N-nitrosamines and polycyclic aromatic hydrocarbons in cigarettes smoked by the participants of the Shanghai Cohort Study. *International Journal of Cancer*, 139(6), 1261–1269.

Zelic, J. (2005) Properties of concrete pavements prepared with ferrochromium slag as concrete aggregate. *Cement and Concrete Research*, 35, 2340-2349.

Zhang, Y., and Tao, S. (2009) Global atmospheric emission inventory of polycyclic aromatic hydrocarbons (PAHs) for 2004. *Atmospheric Environment*, 43(4), 812-819.

Zhang. J., Ichiba, M., Hara, K., et al. (2001) Urinary 1-hydroxypyrene in coke oven workers relative to exposure, alcohol consumption, and metabolic enzymes. *Occupational and Environmental Medicine*, 58(11), 716–721.

Zhou, X., Hao, X., Ma, Q., et al. (2017) Effects of compound chemical activators on the hydration of low-carbon ferrochrome slag-based composite cement. *Journal of Environmental Management*, 191, 58-65.

APPENDIX A

UNIVERSITY OF THE WITWATERSRAND, JOHANNESBURG

R14/49 Dr Nombuyiselo Mvulane

HUMAN RESEARCH ETHICS COMMITTEE (MEDICAL)

CLEARANCE CERTIFICATE NO. M160842

NAME: (Principal Investigator)	Dr Nombuyiselo Mvulane
DEPARTMENT:	School of Public Health
PROJECT TITLE:	Evaluation of Exposure to Polycyclic Aromatic Hydrocarbons in Ferrochrome Plant Workers in South Africa from 2012 to 2015
DATE CONSIDERED:	26/08/2016
DECISION:	Approved unconditionally
CONDITIONS:	
SUPERVISOR:	Kerry Wilson and Jenny Sapire
APPROVED BY:	Doctor CB Penny, Chairperson, HREC (Medical)
DATE OF APPROVAL:	19/09/2016

This clearance certificate is valid for 5 years from date of approval. Extension may be applied for.

DECLARATION OF INVESTIGATORS

To be completed in duplicate and **ONE COPY** returned to the Research Office Secretary in Room 301, Third Floor, Faculty of Health Sciences, Phillip Tobias Building, 29 Princess of Wales Terrace, Parktown, 2193, University of the Witwatersrand. I/we fully understand the conditions under which I am/we are authorized to carry out the above-mentioned research and I/we undertake to ensure compliance with these conditions. Should any departure be contemplated, from the research protocol as approved, I/we undertake to resubmit the application to the Committee. **I agree to submit a yearly progress report**. The date for annual re-certification will be one year after the date of convened meeting where the study was initially reviewed. In this case, the study was initially reviewed in **August** and will therefore be due in the month of **August** each year. Unreported changes to the application may invalidate the clearance given by the HREC (Medical).

Principal Investigator Signature Date

PLEASE QUOTE THE PROTOCOL NUMBER IN ALL ENQUIRIES

APPENDIX B

General consent form for medical surveillance and testing (signatory portion)

Consent

As part of my conditions of employment with_____ ,I_____ Company employee no._____ hereby consent to examinations of medical surveillance. I also consent to other appropriate tests, for monitoring for occupational exposure and/or assessment for fitness for work.

I certify that the answers to the questions asked in this document are to the best of my knowledge true and correct and that any false information may invalidate the terms of my employment. I consent that, if required, a doctor acting for the Company may approach my medical attendants for further information, and my signature hereunder gives my consent to this on the understanding that any information so obtained will be treated as confidential.

This document is confidential. I agree to medical surveillance results and fitness for work to be divulged to management and/or the appropriate authorities where applicable.

_____ _____

Signature of Employee Date

APPENDIX C

(Reproduced copy of the CTPV questionnaire)

CTPV (COAL TAR PITCH VOLATILES) EXPOSURE QUESTIONNAIRE

Initials and Surname		Company	
Employee Number		Department	
Employment Date		Job Description	

		Yes	No	Detail if YES	Action
Smoking History	Number of cigarettes/ pipe/ zol smoked per day				
	Length of time you have smoked				
Heating facilities used at home	Open/ coal fire in the home				
	Gas/ electric heater				
Is your sleeping area well ventilated?					
Cooking facility in use at home	Coal Stove				
	Gas/ electric Stove				
Was the food that you ate this week:	Cooked				
	Boiled				
	Grilled				
Absenteeism profile for the past 3 months	Number of times booked off				
	Number of days booked off				
Last screening test date		**Last screening test result**			

Employee Signature		Date	
OHNP Signature		Date	
OHMP Signature		Date	

APPENDIX D

Table 1.2: A summary of publications reporting the dietary intake of benzo[a]pyrene and total PAHs (in µg/day)[a] in various countries (*adapted from Domingo and Nadal, 2015; Tongo et al, 2017*)

Location		Year	Daily intake		Study type	Reference
			BaP	PAHs		
Europe	Catalonia, Spain	2000	0.128	8.42		Falcó et al. (2003)
	Catalonia, Spain	2005	0.006	0.268	Only 14 edible marine species	Llobet et al. (2006)
	Catalonia, Spain	2006	0.089	12.04		Martí-Cid et al. (2008)
	Catalonia, Spain	2008	0.076	6.72		Martorell et al. (2010)
	Spain	1992–1996	0.14	8.57		Ibáñez et al. (2005)
	Canary Islands, Spain	2012		1.59	Only eggs	Luzardo et al. (2013)
	France	2006–2007	0.013	0.104[b]	Only PAH4[d]	Veyrand et al. (2013)
	Uppsala, Sweden	2010	0.049	0.27	Only PAH4[d]	Abramsson-Zetterberg et al. (2014)
	Tartu, Estonia	2001–2005	0.029	0.346	Only meat products	Reinik et al. (2007)
	Thessaloniki, Greece	1993–1994	0.005	2.63[b]	Only 5 vegetables species	Voutsa and Samara (1998)
	United Kingdom	n.a.	0.25	3.70		Dennis et al. (1991)
	Milan, Italy	1985–1988		3		Lodovici et al. (1995)
	Italy	n.a.	0.16–0.32	n.a.	Four mean diet samples	Turrio-Baldassarri et al. (1996)
	Naples, Italy	n.a.	0.153	1.78[b]	Children aged 7–9	Cirillo et al. (2010)
	The Netherlands	n.a.		1.1–22.5		Vaessen et al. (1988)
	The Netherlands	1984–1986	0.12–0.29	5.22–17.06	Low and high estimates	De Vos et al. (1990)
Asia	Korea	n.a.	0.126	n.a.		Lee and Shim (2007)
	Seoul, Korea	2003–2004		0.198		Yoon et al. (2007)
	Busan, Korea	2005–2007		1.07	Only 26 marine species	Moon et al. (2010)
	Korea	n.a.		0.002[c]	Only edible oils	Kang et al. (2014)
	Northern China	1998–1999	0.106	0.558	Only 9 vegetables species	Zhong and Wang (2002)
	Taiyuan, China	2008		0.572[c]		Xia et al. (2010)
	Xuanwei and Fuyuan, China	2009	0.458	14.53	Counties with the highest lung cancer incidence in China	Cai et al. (2012)
	Shanghai, China	2008–2009		0.848		Yu et al. (2012)

Table 1.2 *(continued)*

	Linzhou, China	2006	0.086[b]	10.8		Deziel et al. (2013)
	Taiyuan, China	2009	0.002	0.061		Nie et al. (2014)
	Beijing, China	n.a.		1.83[b]		Yu et al. (2015)
	Mumbai, India	2006–2008		0.124–0.749	Only fish	Dhananjayan and Muralidharan (2012)
America	USA	1994–1996	0.005[b]	n.a.	controls vs. cases with colorectal adenoma risk	Sinha et al. (2005)
	Brazil	2007–2008		0.868	Only soybean oils	Rojo Camargo et al. (2011))
Africa	Nigeria	n.a.	3.44[e]	25.9[e]	Only milk	Iwegbue and Bassey (2013)
	Nigeria		0.34[e]	1.62[e]	Only fish	Iwegbue et al. (2015)
	Nigeria	n.a	7[ef]	195[ef]	Only smoked fish	Tongo et al, (2017)

n.a.: not available.
a When provided as ng/kg body weight/day, dietary intake units were converted to µg/day by assuming a mean body weight for the adult population of 70 kg.
b Median value.
c µg BaP-eq/day.
d PAH4: benzo(a)pyrene, chrysene, benzo(b)fluoranthene, and benz(a)anthracene.
e Maximum values.
f converted from mg/day to µg/day

APPENDIX E

Table 1.3: The levels of urine 1-hydroxypyrene (1-OHP) from workers in various industries

Workplace/reference	**Country/ year/ number of subjects**	**Urine 1-OHP**
Carbon anode plant ***Petry et al., 1996***	Country-Not stated 6 subjects	***µmol/mol creatinine (crea.)*** pre-shift 0.5 -38.9 post-shift 0.5-61.8
Coke plant employee; **Controls (repair and maintenance in same plant)** ***Zhang et al., 2001***	China 220 subjects	***µmol/mol crea.*** GM(range) **Exposed**(n=162) 9.86 (0.8–89.8) **Controls**(n=58) 0.54 (0.1–2.8)
Coke oven workers ***Kuljukka-Rabb et al., 2002***	Estonia/ 1994 59 subjects: 49 coke-oven works; 10 controls	***µmol/mol crea*.** Median; mean(range) **1st sample** 3.4; 8.7(0.2-69.5) **2nd sample** 1.5; 3.7 (0.28-21.6) **Controls**(n=10); 0.27 (0.13-1.68)
Coke plant ***Strunk et al., 2002***	Country-Not stated 24 males	***µg/g crea.*** Mean(range): **Topside** 19.7 (6.84-34.82**); Benchside**7.01 (1.22-15.03) **Complete** 3.57 (0.51-10.20)
Coke oven; Controls(admin, same plant -2 km away) ***Chen et al., 2003***	Taiwan/ Aug 1995- Feb 1996 152 subjects: 89 coke workers; 63 controls	***µg/g crea.***GM(GSD) **Controls:**0.30(2.20) **Topside:**32.8 (1.70) **Coke side:** 3.00(2.10) **Plant office:** 2.5(1.7)
Paving workers **Control (white collar workers)** ***Väänänen et al., 2003***	Finland 24 workers; 25 controls	***µmol/mol*** [AM/GM/(Range)] **Pavers** *Non-smokers* [0.41;0.24(<0.06-2.2)] *Smokers* [0.19; 0.18(0.14-0.29)] **Traffic controllers**: *Non-smokers* [0.06;-(<0.06-0.09)] *Smokers*[-; -(<0.06)] **Controls** [0.21; 0.08(<0.06-2.5]
Coke oven workers ***Wu et al., 2003***	Southern Taiwan/ 2001 217 subjects	***ng/ml*** Mean (SD) **Topside**(n=55) 93.5(104.4) **Side-oven**(n=162) 19.8(28.6)
Highway construction (Asphalt Paving) ***McClean et al., 2004***	Greater Boston, USA/ 1999 26 males	***µg/g crea*** Mean(SD) Baseline 0.4. Day 3 post-shift**: Pavers** 2.0(2.1) **Millers** 0.3(0.3)
Highway Toll Station Booth Attendants ***Tsai et al., 2004***	Country- Not stated 53 subjects: 32 exposed females; 21 controls	***µmol /mol crea.* Mean (range)** **Pre** 0.91 (0.42-1.94) **Post** 3.02(1.41-4.68) **Controls**(n=21) 0.41 (0.014-1.13)
Coke oven workers from a Steel plant ***Bisceglia et al., 2005***	ILVA, Taranto 355 subjects	***µmol/mol crea***. **Total** *Median(range)* 1.05(0.01-31.04) **Highest (Maintenance)** *Median (range)* 1.71(0,06-14,69)
Coke oven; Refractory & graphite electrode; In-feed of converters ***Rihs et al., 2005***	Germany/ 1999-2003 170 subjects	***µmol/mol crea.*** Median(IQR) **Coke** 1.8(1.1-3.6) **Infeed** 7.0(3.9-16.2)
Cross-industry: Coke oven CO**; Other industry** O ***Unwin et al., 2006***	UK 219 personal airborne samples 25 sites; 281 end-shift urine;213 pre-shift next day	***µmol/mol*** Mean (range) Post-shift. **Overall** 2.49(0.5 -60) **Coke oven** 2.1 (0.25–7) **Other industry (excluding timber impregnation)** Mean; median(range) 1.8; 0.25(below detection-29)
Vehicle exhaust exposure ***Chuang &Chang, 2007***	Taiwan 170 subjects	***µmol/mol crea.* Mean(SD)** **Taxi**(n=95) 0.17 (0.10) **Office**(n=75) 0.10(0.07)

Table 1.3 *(continued)*		
Coke oven workers(CW) **Non coke oven workers(NCW)** ***Han et al., 2008***	An-Shan, China/ 2002-3 100 subjects: 50 workers; 50 controls Age 23-51	***ng/ml*** *GM* Morning ***NCW*** 0.3(0.24-0.39) ***CW*** 3.16(2.35–4.24) 24hrs ***NCW*** 0.22(0.16–0.30) ***CW*** 2.40(1.92–2.99)
Chinese restaurant employees ***Pan et al., 2008***	Taiwan/ 2005 288 subjects	***µmol/mol*** Mean(SD) **Kitchen** 6.2 (8.2) **Service** 4.4 (7.0)
Construction site ***Pesch et al., 2011***	Germany/ 2001-8 543 subjects: 317 exposed to bitumen(E); 117 non-exposed roadside construction(NE)	**ng/l** Median (IQR) ***NE***: *Non-smoker* 158(70-261); *Smoker* 271 (144-458); ***E*** : *Non-smoker* 193(94-385) *Smoker* 407(202-743)
Road pavers (Bitumen exposed) **Controls (general population)** ***Sellappa et al., 2011***	Coimbatore, South India/ 2010 73 males; 26-59 years; 36 Road pavers and 37 controls.	***µmol/mol crea.*** Mean(SD) **Road paver RP:** 1.68 (0.93) **Controls:** 0.55(0.42)
Coke oven ***Jeng et al., 2013a***	Kaohsiung, Taiwan 65 subjects	**µg/g *crea.*** Mean (SD) 9.4(8.5)
Coke oven workers ***Jeng et al., 2013b***	Taiwan Non-smokers; Age 20-50yrs 51 subjects: 36 exposed; 15 controls	***µg/g crea.*** Mean (SD) **High** 12.8(12.9) **Low**: 4.4(4.3) **control**: 0.3 (0.2)
Chinese military cooks **Controls (office-based soldiers)** ***Lai et al., 2013***	Taiwan 98 subjects	***ng/ml*** Mean (95%CI) **Cook**: Pre 0.60 (0.43 to 0.77) Post 0.84 (0.46 to 1.23) **Office:** Pre 0.51 (0.31 to 0.72) Post 0.23 (0.15 to 0.32)
Metallurgy workers ***Barbeau et al., 2014***	Country-Not stated 129 males. 18-65yrs	***µmol/mol*** Median(range) **Silicon production** 0.44 (0.10–2.87) **Cathode** 0.96 (0.12–6.99) **Anode** 4.01 (0.18–19.54)
Aluminium, graphite electrodes, road construction, rubber forming ***Kloslova et al, 2016***	Slovakia 139 subjects	***µmol/mol crea.*** Mean(range) **Aluminium** 4.99 (0.0–24.4) **Graphite** 2.59(0.11-4.57) **Rubber forming** 1.93(0.98-3.46) **Road construction** 1.37 (1.05–2.04) Range **Control1**:0.07–1.25; **Control2**: 0.08–0.90
Fire fighter trainees ***Andersen et al.,2018***	Denmark/ 2015-16 Cross-over study(subjects served as own controls Before B; Immediately after training IA; 2 weeks later **L.**	***µmol/mol crea.*** B***:*** Mean(SD) 0.4 (0.3) IA**:** Mean(SD) 0.68 (0.53)Median(IQR) 0.51 (0.28–0.98 L**:** Mean(SD) 0.48 (0.23) Median(IQR) 0.41 (0.23–0.60)
Pavement construction workers; hot mix asphalt with modified bitumen ***Fostinelli et al., 2018***	Northern Italy/ 2013-15 144 subjects	***µg/l*** Median (range) **truck driver/ other** 0.26 (0.01–1.79) **Paver** 1.40 (0.15–7.70